MIAMI-DADE COUNTY
DEPARTMENT OF REGULATORY AND ECONOMIC RESOURCES (RER)
BOARD AND CODE ADMINISTRATION DIVISION

MIAMI-DADE COUNTY, FLORIDA
PRODUCT CONTROL SECTION
11805 SW 26 Street, Room 208
T (786) 315-2590 F (786) 315-2599
www.miamidade.gov/economy

NOTICE OF ACCEPTANCE (NOA)

Metro Door, Inc.
325 West 74th Place
Hialeah, Fl. 33014

SCOPE:

This NOA is being issued under the applicable rules and regulations governing the use of construction materials. The documentation submitted has been reviewed and accepted by Miami-Dade County RER-Product Control Section to be used in Miami-Dade County and other areas where allowed by the Authority Having Jurisdiction (AHJ).

This NOA shall not be valid after the expiration date stated below. The Miami-Dade County Product Control Section (In Miami-Dade County) and/or the AHJ (in areas other than Miami-Dade County) reserve the right to have this product or material tested for quality assurance purposes. If this product or material fails to perform in the accepted manner, the manufacturer will incur the expense of such testing and the AHJ may immediately revoke, modify, or suspend the use of such product or material within their jurisdiction. RER reserves the right to revoke this acceptance, if it is determined by Miami-Dade County Product Control Section that this product or material fails to meet the requirements of the applicable building code.

This product is approved as described herein, and has been designed to comply with the Florida Building Code, including the High Velocity Hurricane Zone.

DESCRIPTION:

Series "10000" 10'0" Outswing Glazed Aluminum French Door w/ Transom – L.M.I.

APPROVAL DOCUMENT: Drawing No. **SDR-10000-L.M,** titled "Series 10000 Out Swing Door /w Transom Large Missile", sheets 1 through 14 of 14, dated 10/21/08, with revision "**3**" dated 07/25/12, prepared by Building Drops, Inc., signed and sealed by Hermes F. Norero, P. E., bearing the Miami-Dade County Product Control Section Revision Stamp with the Notice of Acceptance number and Expiration Date by the Miami-Dade County Product Control Section.

MISSILE IMPACT RATING: Large and Small Missile Impact Resistant

LABELING: Each unit shall bear a permanent label with the manufacturer's name or logo, city, state, model/series, and following statement: "Miami-Dade County Product Control Approved", unless otherwise noted herein.

RENEWAL of this NOA shall be considered after a renewal application has been filed and there has been no change in the applicable building code negatively affecting the performance of this product.

TERMINATION of this NOA will occur after the expiration date or if there has been a revision or change in the materials, use, and/or manufacture of the product or process. Misuse of this NOA as an endorsement of any product, for sales, advertising or any other purposes shall automatically terminate this NOA. Failure to comply with any section of this NOA shall be cause for termination and removal of NOA.

ADVERTISEMENT: The NOA number preceded by the words Miami-Dade County, Florida, and followed by the expiration date may be displayed in advertising literature. If any portion of the NOA is displayed, then it shall be done in its entirety.

INSPECTION: A copy of this entire NOA shall be provided to the user by the manufacturer or its distributors and shall be available for inspection at the job site at the request of the Building Official.

This NOA **revises NOA No. 10-0520.06** and consists of this page 1 and evidence pages E-1 and E-2, as well as approval document mentioned above.

The submitted documentation was reviewed by **Jaime D. Gascon, P. E.**

MIAMI-DADE COUNTY APPROVED

J. Gascon 10/4/12

Metro Door, Inc.

NOTICE OF ACCEPTANCE: EVIDENCE SUBMITTED

A. DRAWINGS

1. Manufacturer's die drawings and sections.
   (Submitted under previous NOA No. 10–0520.06)
2. Drawing No. **SDR–10000–L.M,** titled "Series 10000 Out Swing Door /w Transom Large Missile", sheets 1 through 14 of 14, dated 10/21/08, with revision "**3**" dated 07/25/12, prepared by Building Drops, Inc., signed and sealed by Hermes F. Norero, P. E.

B. TESTS

1. Test reports on: 1) Large Missile Impact Test, per FBC, TAS 202–94
   2) Cyclic Wind Pressure Loading, Loading per FBC, TAS 202–94
   along with marked–up drawings and installation diagram of an Aluminum outswing door w/ transom, prepared by Fenestration Testing Laboratory, Inc., Test Report No. **FTL–6132**, dated 02/16/10, signed and sealed by Jorge A. Causo, P. E.
   (Submitted under previous NOA No. 10–0520.06)
2. Test reports on: 1) Air Infiltration Test, per FBC, TAS 202–94
   2) Uniform Static Air Pressure Test, Loading per FBC, TAS 202–94
   3) Water Resistance Test, per FBC, TAS 202–94
   4) Large Missile Impact Test, per FBC, TAS 201–94
   5) Cyclic Wind Pressure Loading, per FBC, TAS 203–94
   6) Forced Entry Test, per FBC 2411.3.2.1, and TAS 202–94
   along with marked-up drawings and installation diagram of an Aluminum outswing door w/ transom, prepared by Fenestration Testing Laboratory, Inc., Test Report No. **FTL–5567**, dated 08/20/08, signed and sealed by Carlos S. Roinda, P. E.
   (Submitted under previous NOA No. 08–10245.10)

C. CALCULATIONS

1. Anchor verification calculations and structural analysis, complying with FBC–2010, prepared by Building Drops, Inc., dated 08/21/12, signed and sealed by Hermes F. Norero, P. E.
2. **Glazing complies with ASTM E1300–04**

D. QUALITY ASSURANCE

1. Miami–Dade Department of Regulatory and Economic Resources (RER).

E. MATERIAL CERTIFICATIONS

1. Notice of Acceptance No. **11–0624.02** issued to **E.I. DuPont DeNemours & Co.**, Inc. for their "**DuPont SentryGlas® Interlayer**" dated 08/25/11, expiring on 01/14/17.

Jaime D. Gascon, P. E.
Product Control Section Supervisor
NOA No. 12–0824.09
Expiration Date: April 08, 2014
Approval Date: October 11, 2012

NOTICE OF ACCEPTANCE: EVIDENCE SUBMITTED

E. MATERIAL CERTIFICATIONS (CONTINUED)

2. Notice of Acceptance No. **11–1102.09** issued to **Solutia, Inc.** for their "**Saflex CP – Saflex and Saflex HP Composites Glass Interlayers with PET Core**" dated 06/14/12, expiring on 12/11/13.

D. STATEMENTS

1. Statement letter of no financial interest, conformance and complying with FBC–2010, issued by Building Drops, Inc., dated 08/21/12, signed and sealed by Hermes F. Norero, P. E.
2. Laboratory compliance letter for Test Report No. **FTL–6132**, issued by Fenestration Testing Laboratory, Inc., dated 02/16/10, signed and sealed by Jorge A. Causo, P. E.
3. ***(Submitted under previous NOA No. 10–0520.06)***
4. Laboratory compliance letter for Test Report No. **FTL–5567**, issued by Fenestration Testing Laboratory, Inc., dated 08/20/08, signed and sealed by Carlos S. Roinda, P. E.
   (Submitted under previous NOA No. 08–1024.10)
5. Proposal No. **08–0435** issued by Product Control, dated 05/08/08, signed by Ishaq Chanda, P. E.
   (Submitted under previous NOA No. 08–1024.10)

G. OTHERS

1. Notice of Acceptance No. **10–0520.06**, issued to Metro Door, Inc. for their "**Series 10000 10'0" Outswing Glazed Aluminum French Door w/ Transom – L.M.I.**", approved on 09/01/10 and expiring on 04/08/14.

Jaime D. Gascon, P. E.
Product Control Section Supervisor
NOA No. 12–0824.09
Expiration Date: April 08, 2014
Approval Date: October 11, 2012

COMMERCIAL OUTSWING DOOR WITH TRANSOM

Panic Hardware (Von duprin model 33/3547A)
Concealed Closer by DNW

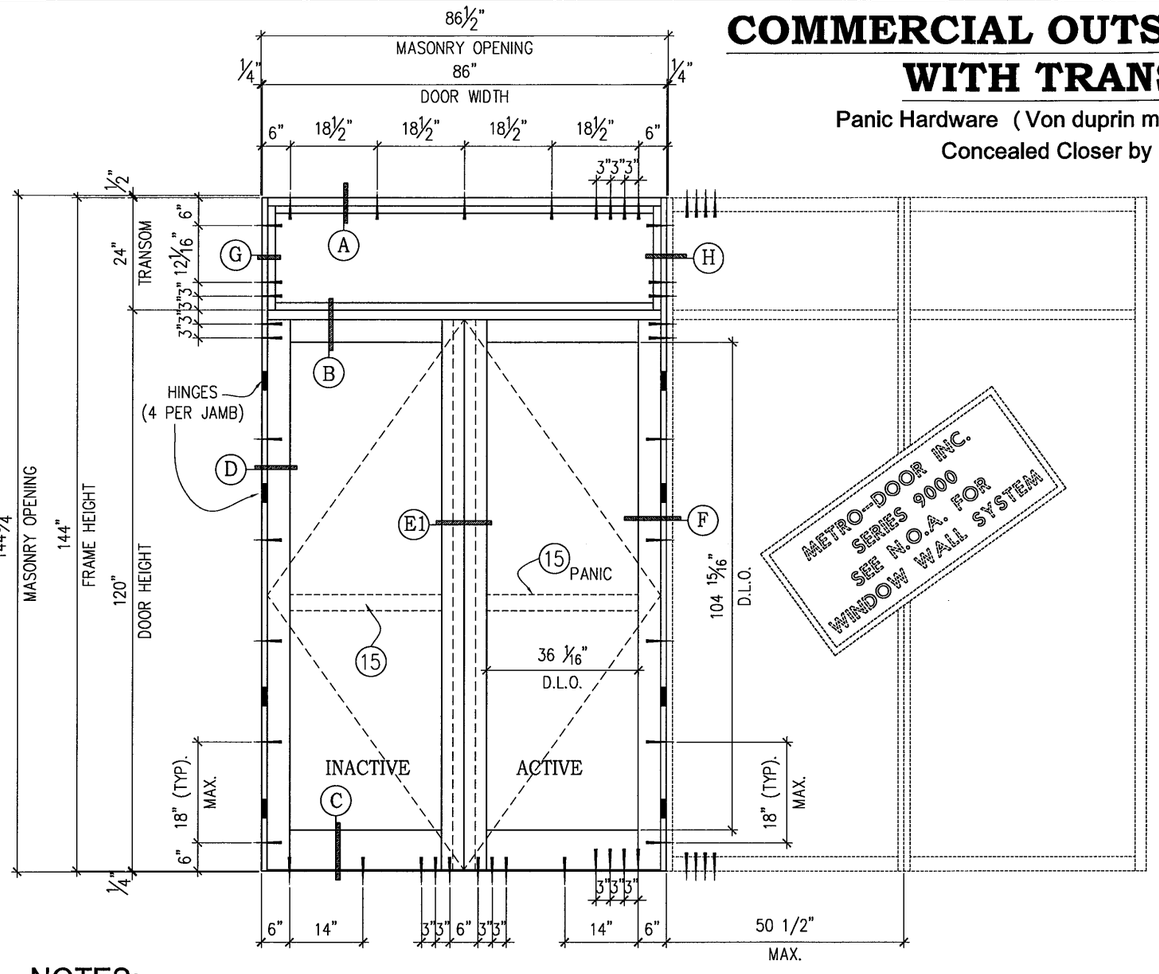

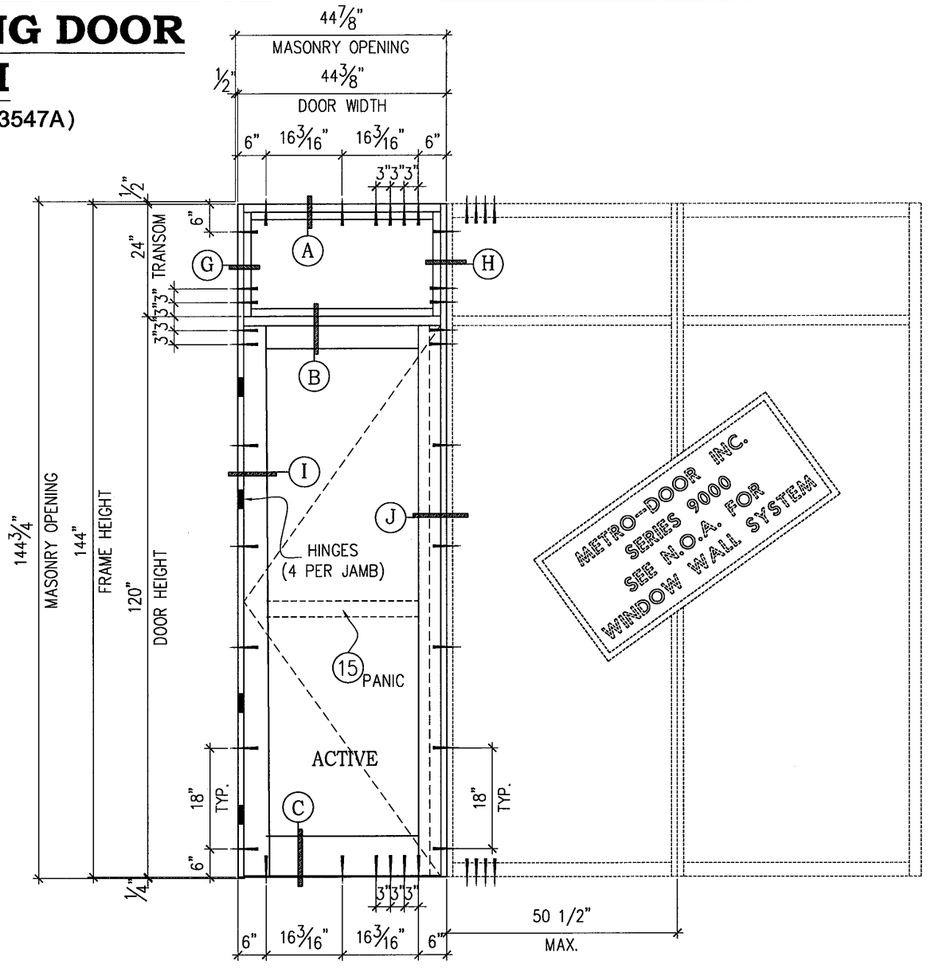

NOTES:

1. THIS SWING DOOR SYSTEM IS DESIGNED AND TESTED TO COMPLY WITH THE REQUIREMENTS OF THE 2010 (FBC) FLORIDA BUILDING CODE CHAPTER 16 AND 24, UNDER THE SPECIFIC CONDITION SHOWN ON THIS DRAWING. REF. FTL No. 5567 & 6132
2. ALL EXTRUSIONS ARE ALUMINUM, 6105–T5 ALLOY, WITH A MINIMUM Fy OF 35.000 P.S.I. U.O.N.
3. LARGE MISSILE IMPACT: INSTALLATION WILL NOT REQUIRE A HURRICANE PROTECTION SYSTEM.
4. INSTALLATION ANCHORS ARE 5/16"ø TAP–CON. 1 ¾" MINIMUM EMBEDMENT INTO FILLED CONCRETE BLOCK OR BETTER. CONCRETE 2,500 PSI MINIMUM. MINIMUM EDGE DISTANCE 2 3/16"
5. SHIMS. USE HARD PLASTIC.
6. APPROVED STRUCTURAL SILICONE:
   A) 795 DOW CORNING
7. PERIMETER SEALANT:
   A) 795 DOW CORNING
8. 1X AND 2X BUCKS SHALL BE DESIGNED AND ANCHORED TO PROPERLY TRANSFER ALL LOADS TO THE STRUCTURE. BUCK DESIGN AND INSTALLATION IS THE RESPONSIBILITY OF THE ENGINEER OR ARCHITECT OF RECORD FOR THE PROJECT OF INSTALLATION.
9. DOORS NOT APPROVED FOR HABITABLE AREAS WHEN WATER INFILTRATION REQUIREMENTS ARE NEEDED UNLESS PROTECTED BY OVER HANG WITH RATIO: LENGTH TO HEIGHT GREATER THAN 1.0
10. EGRESS/ESCAPE REQUIREMENTS PER FBC TO BE REVIEWED BY BUILDING OFFICIAL ON CASE PER CASE BASIS.

DESIGN LOAD CAPACITY (P.S.F.)		MAXIMUM D.L.O. WIDTH	MAXIMUM D.L.O. HEIGHT
POSITIVE	NEGATIVE		
90	90	36 1/16"	104 15/16"
SEE NOTE 9 FOR WATER INFILTRATION			

PRODUCT REVISED
as complying with the Florida
Building Code
Acceptance No 12-0824.09
Expiration Date 04/08/2014
By
Miami-Dade Product Control

HERMES F. NORERO P.E.
398 EAST DANIA BEACH BLVD. #338
DANIA BEACH, FL. 33004
DATE: 8-21-2012
FLORIDA No. 73178
FBPE CERT. OF AUTH. No. 29578

METRO-DOOR Inc.
325 West 74 Place
Hialeah Florida, 33014
Phone 305-231-1101 Fax 305-231-1103

Series 10000
OUT SWING DOOR/W TRANSOM
LARGE MISSILE

COVER ELEVATIONS

Revision			
No	Date	By	Description
1	01-22-09	R. P.	B.C.C.O.
2	03-13-09	R. P.	B.C.C.O.
3	07-25-12	JLA	2010 FBC CC

Date	10-21-2008
Scale	N.T.S.
Design by	G. S.
Drawing by	RICHARD
Checked by	G. S.

Drawing No.
SDR-10000-L.M

COMMERCIAL OUTSWING DOOR WITH TRANSOM

Standard Hardware - Concealed Closer by DNW

(REGENT MULTIPOINT)

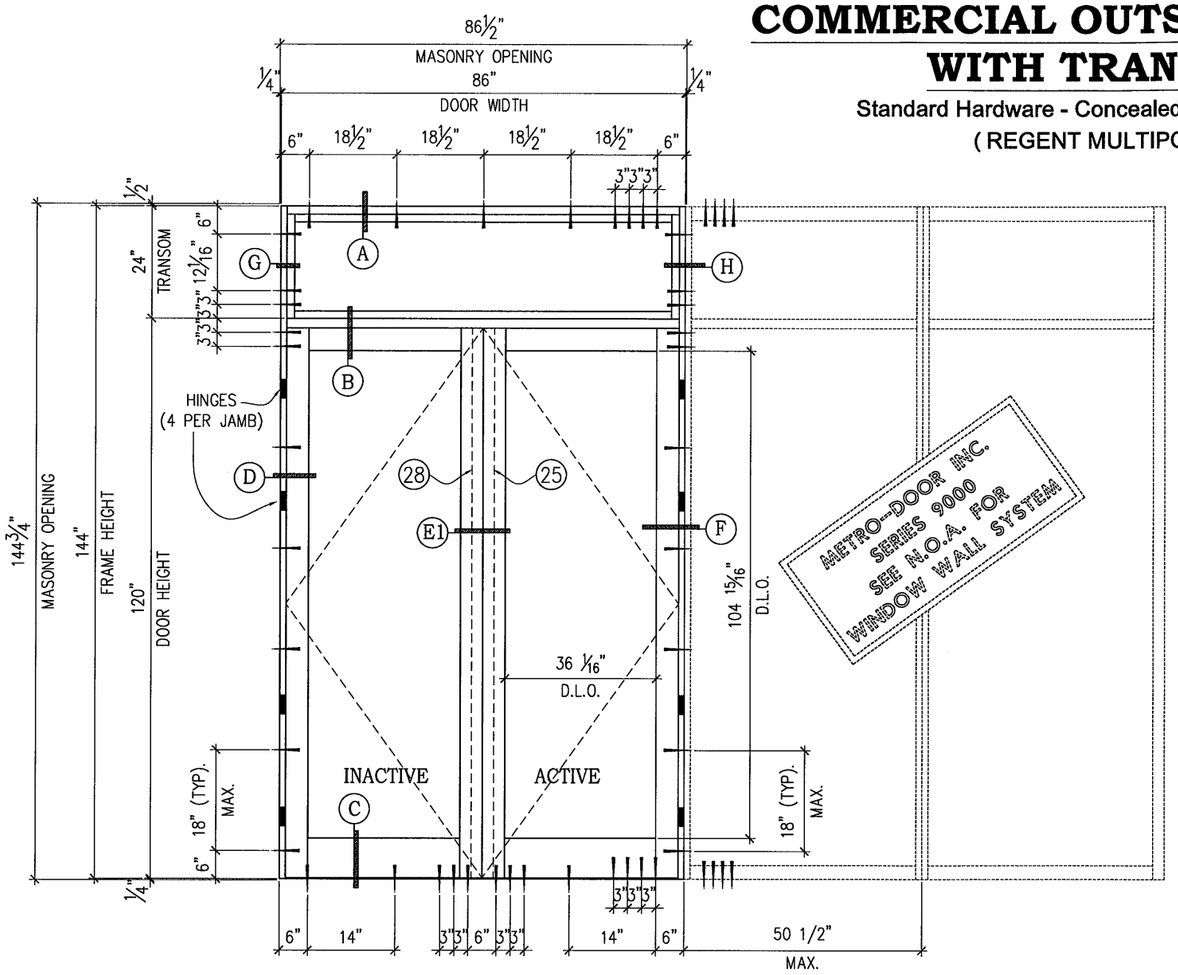

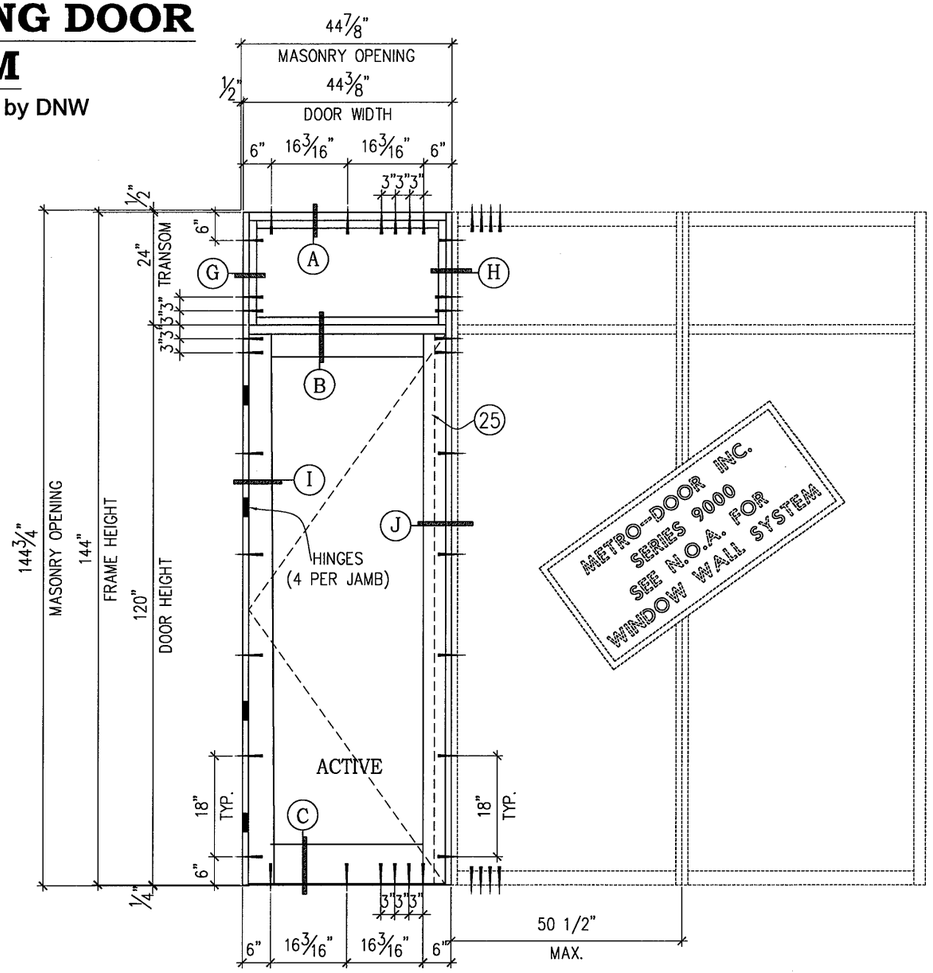

DESIGN LOAD CAPACITY (P.S.F.)		MAXIMUM D.L.O. WIDTH	MAXIMUM D.L.O. HEIGHT
POSITIVE	NEGATIVE		
90	90	36 1/16"	104 15/16"
SEE NOTE 9 FOR WATER INFILTRATION			

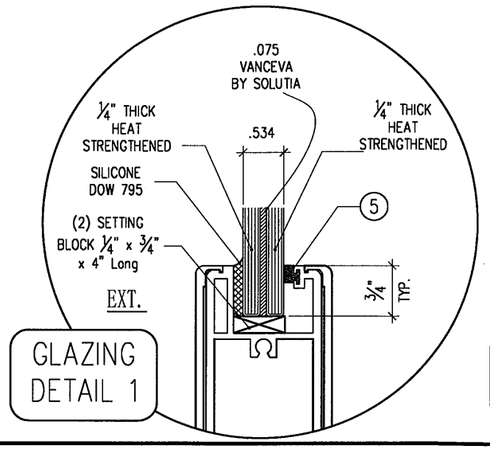

GLAZING DETAIL 1

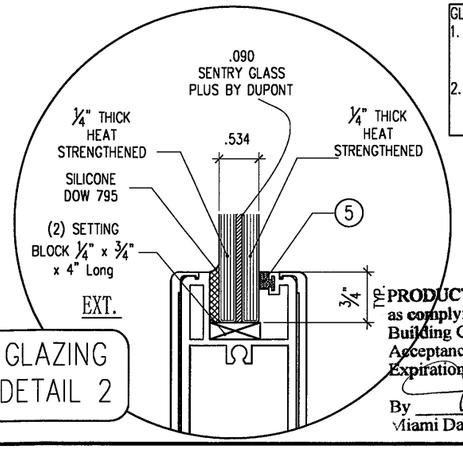

GLAZING DETAIL 2

GLAZING NOTES:
1. DUPONT SENTRYGLAS PLUS & SOLUTIA VANCEVA INTERLAYERS APPROVED UNDER SEPARATE NOA'S & MEET FBC 2010 REQUIREMENTS.
2. ALL GLAZING CONFIGURATIONS SHALL COMPLY WITH SAFETY GLAZING REQUIREMENTS OUTLINED IN 2010 FBC SECTION 2406.

PRODUCT REVISED
as complying with the Florida Building Code
Acceptance No 12-0824.09
Expiration Date 04/08/2014
By
Miami Dade Product Control

HERMES F. NORERO P.E.
398 EAST DANIA BEACH BLVD. #338
DANIA BEACH, FL 33004
DATE: 8-21-2012
FLORIDA No. 73778
FBPE CERT. OF AUTH. NO. 29578

METRO-DOOR Inc.
325 West 74 Place
Hialeah Florida, 33014
Phone 305-231-1101 Fax 305-231-1103

Series 10000
OUT SWING DOOR/W TRANSOM
LARGE MISSILE

ELEVATIONS

Revision			
No	Date	By	Description
1	01-22-09	R. P.	B.C.C.O.
2	03-13-09	R. P.	B.C.C.O.
3	07-25-12	JLA	2010 FBC CC

Date	10-21-2008
Scale	N.T.S.
Design by	G. S.
Drawing by	RICHARD
Checked by	G. S.

Drawing No.
SDR-10000-L.M

Sheet 2 of 14

RESIDENTIAL OUTSWING DOOR WITH TRANSOM

Hardware (Ashland W5110-stacT5 concealed multipoint active lock)

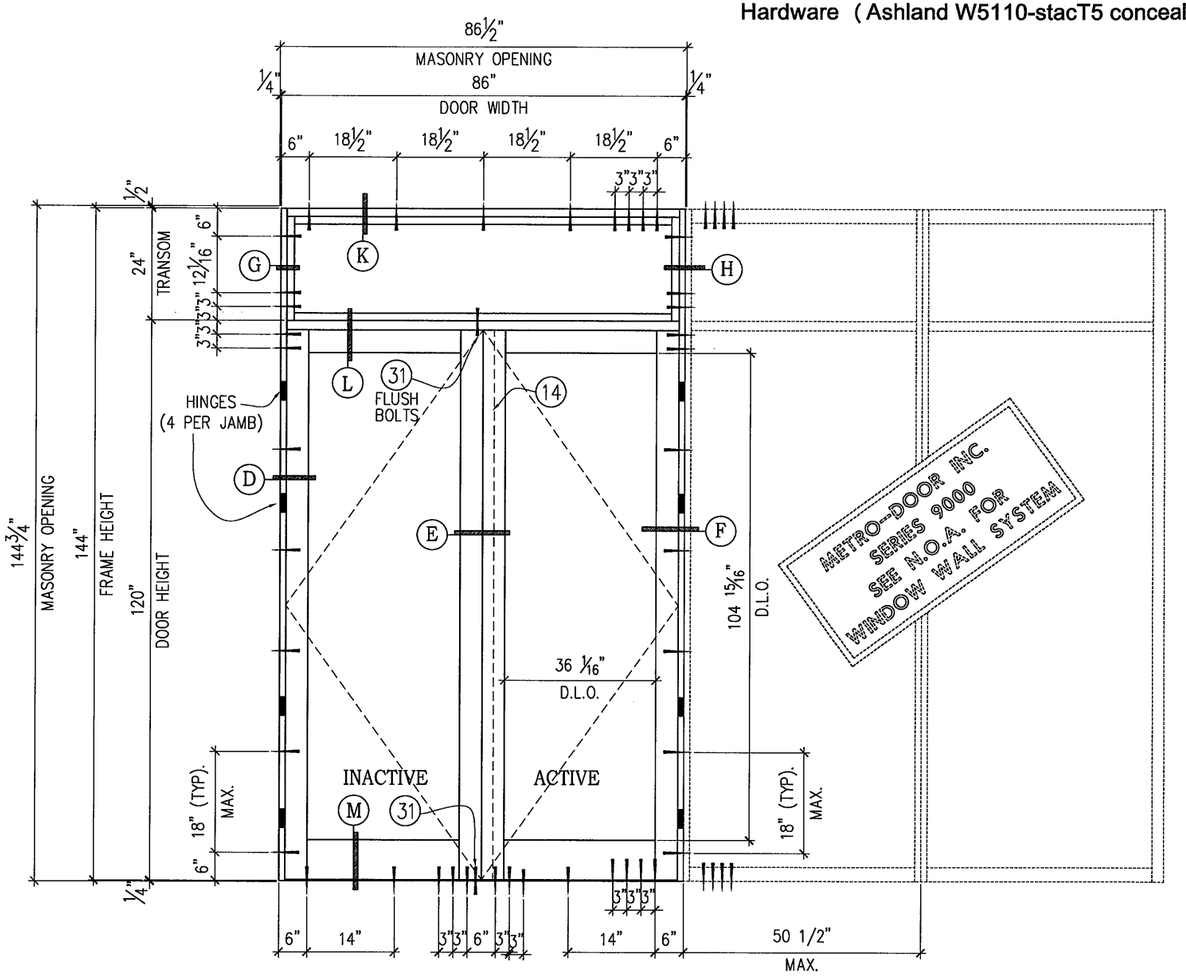

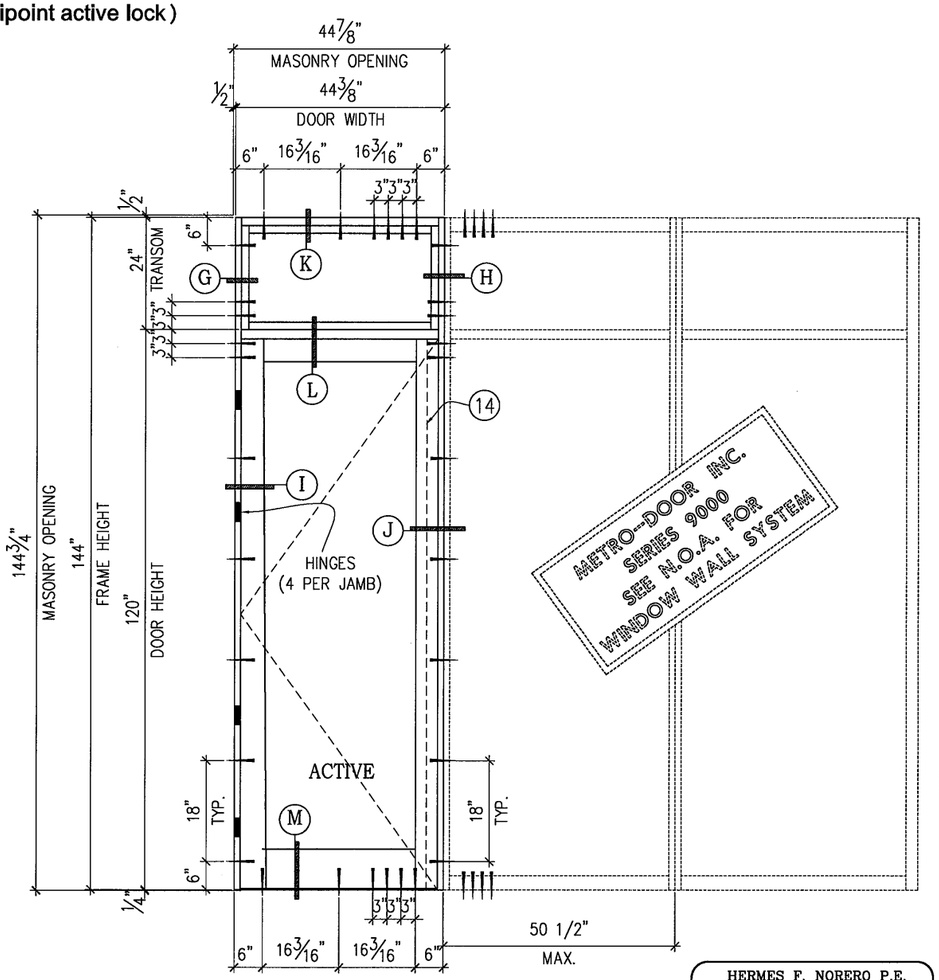

DESIGN LOAD CAPACITY (P.S.F.)		MAXIMUM D.L.O. WIDTH	MAXIMUM D.L.O. HEIGHT
POSITIVE	NEGATIVE		
*90	90	36 1/16"	104 15/16"
SEE NOTE 9 FOR WATER INFILTRATION * HIGH RESIDENTIAL SILL & ASTRAGAL			

PRODUCT REVISED
as complying with the Florida
Building Code
Acceptance No 12-0824.09
Expiration Date 04/08/2014
By
Miami Dade Product Control

HERMES F. NORERO P.E.
398 EAST DANIA BEACH BLVD. #338
DANIA BEACH, FL. 33004
DATE: 8-21-2012
FLORIDA No. 73778
FBPE CERT. OF AUTH. NO. 29578

METRO-DOOR Inc.
325 West 74 Place
Hialeah Florida, 33014
Phone 305-231-1101 Fax 305-231-1103

Series 10000
OUT SWING DOOR/W TRANSOM
LARGE MISSILE

ELEVATIONS

Revision			
No	Date	By	Description
1	01-22-09	R. P.	B.C.C.O.
2	03-13-09	R. P.	B.C.C.O.
3	07-25-12	JLA	2010 FBC CC

Date	10-21-2008
Scale	N.T.S.
Design by	G. S.
Drawing by	RICHARD
Checked by	G. S.

Drawing No.
SDR-10000-L.M

COMMERCIAL OUTSWING DOOR

Panic Hardware (Von duprin model 33/3547A)

Concealed Closer by DNW

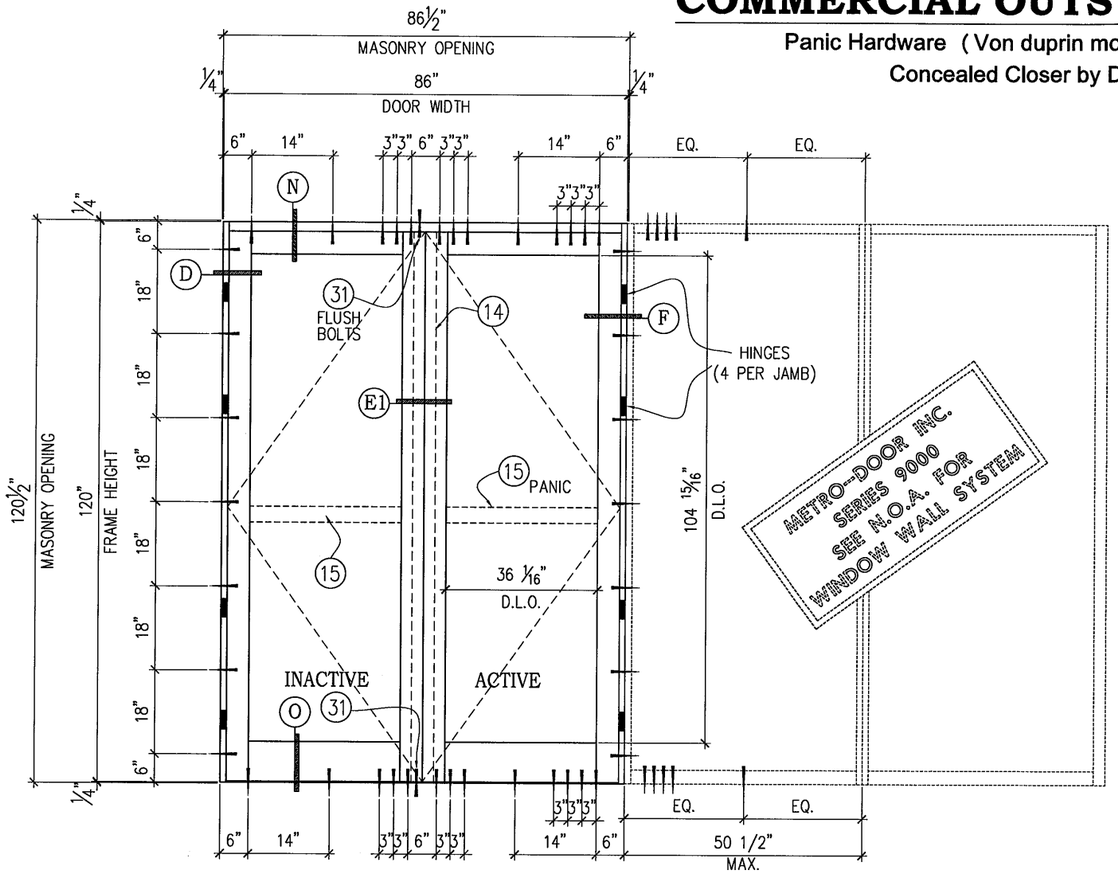

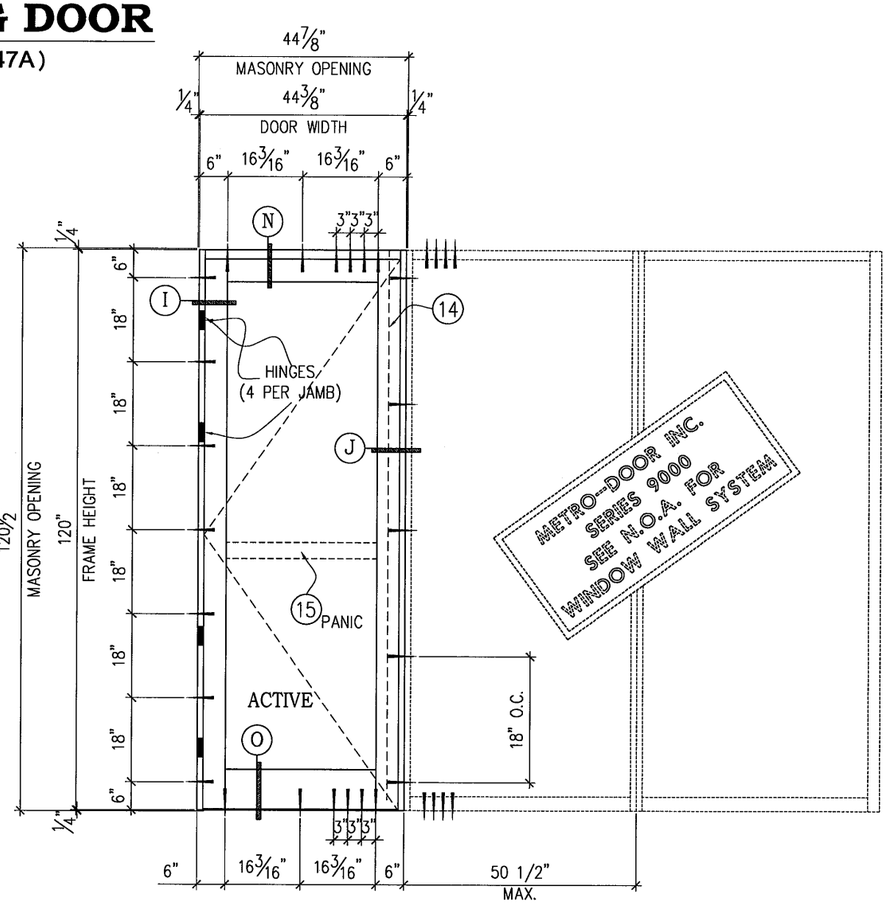

DESIGN LOAD CAPACITY (P.S.F.)		MAXIMUM D.L.O. WIDTH	MAXIMUM D.L.O. HEIGHT
POSITIVE	NEGATIVE		
110	110	36 1/16"	104 15/16"
SEE NOTE 9 FOR WATER INFILTRATION			

NOTE: LISTED DESIGN PRESSURE FOR USE WITH GLAZING TYPE 1 ONLY.

PRODUCT REVISED
as complying with the Florida
Building Code
Acceptance No 12-0824.09
Expiration Date 04/08/2014
By
Miami Dade Product Control

HERMES F. NORERO P.E.
398 EAST DANIA BEACH BLVD. #338
DANIA BEACH, FL 33004

DATE: 8-31-2012

FLORIDA No. 73778
FBPE CERT. OF AUTH. NO. 29578

METRO-DOOR Inc.
325 West 74 Place
Hialeah Florida, 33014
Phone 305-231-1101 Fax 305-231-1103

Series 10000
OUT SWING DOOR W/TRANSOM
LARGE MISSILE

ELEVATIONS

Revision			
No	Date	By	Description
1	01-22-09	R. P.	B.C.C.O.
2	03-13-09	R. P.	B.C.C.O.
3	07-25-12	JLA	2010 FBC CC

Date	10-21-2008
Scale	N.T.S.
Design by	G. S.
Drawing by	RICHARD
Checked by	G. S.

Drawing No.
SDR-10000-L.M

COMMERCIAL OUTSWING DOOR

Standard Hardware - Concealed Closer by DNW
REGENT MULTIPOINT

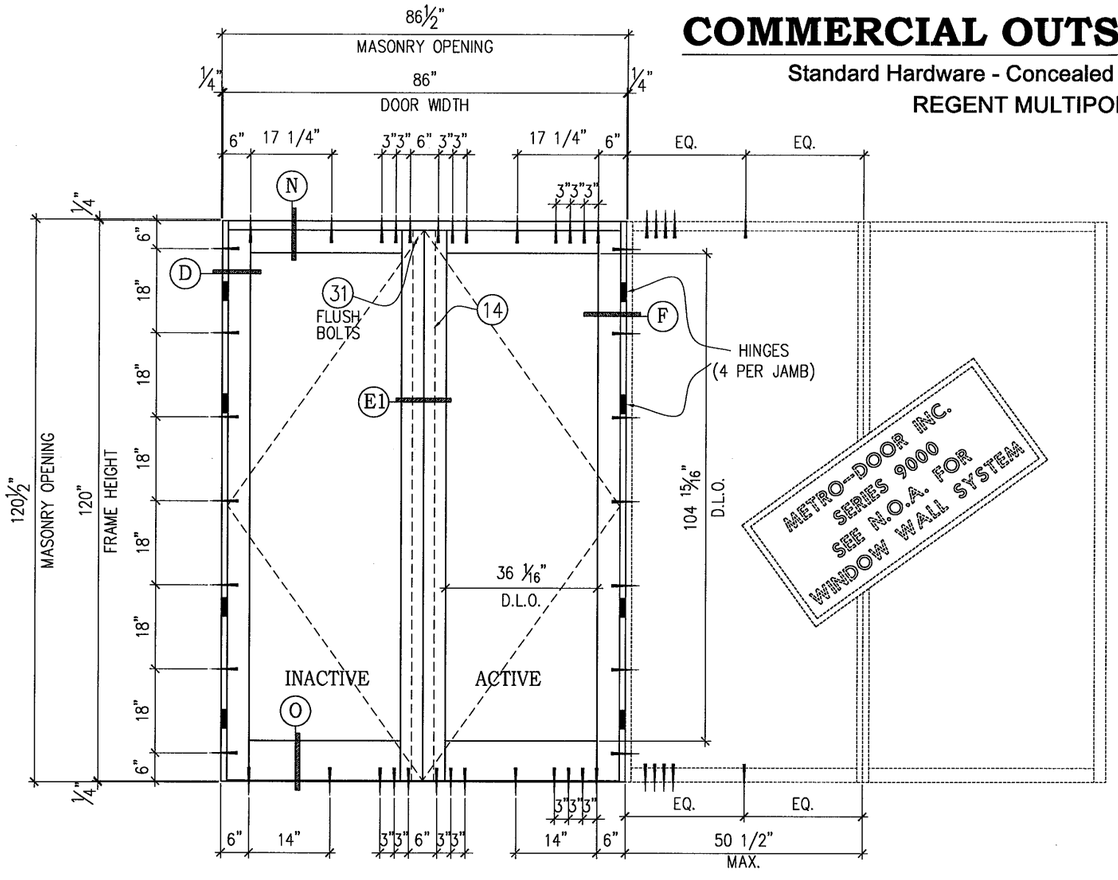

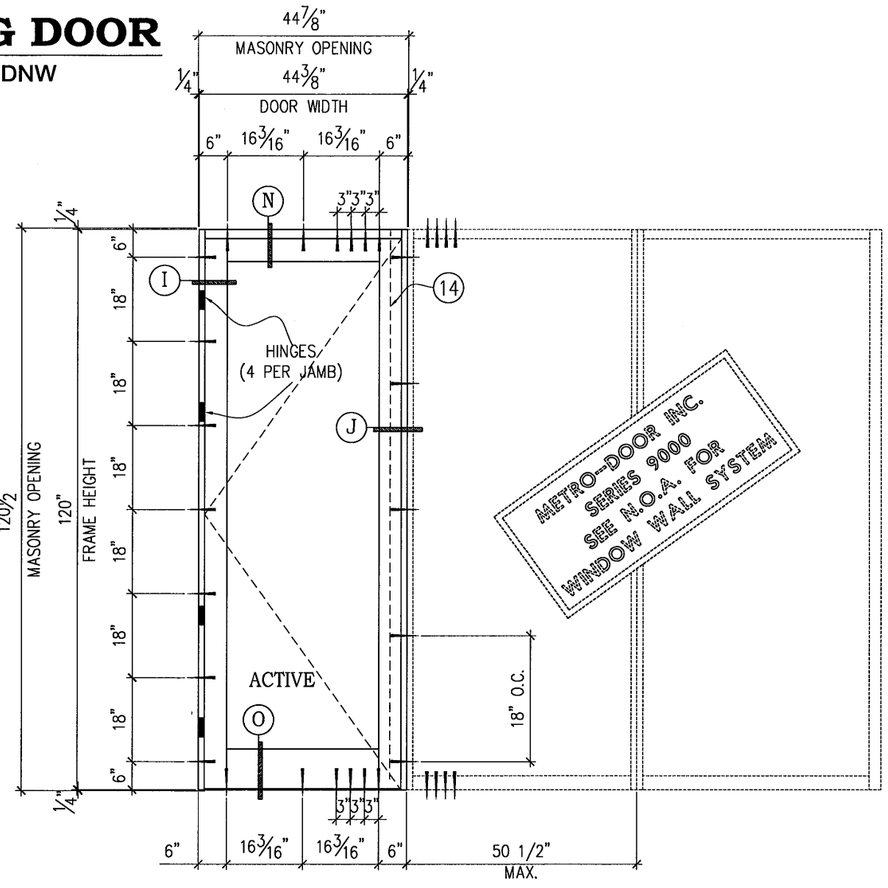

DESIGN LOAD CAPACITY (P.S.F.)		MAXIMUM D.L.O. WIDTH	MAXIMUM D.L.O. HEIGHT
POSITIVE	NEGATIVE		
110	110	36 1/16"	104 15/16"
SEE NOTE 9 FOR WATER INFILTRATION			

NOTE: LISTED DESIGN PRESSURE FOR USE WITH GLAZING TYPE 1 ONLY.

PRODUCT REVISED
as complying with the Florida
Building Code
Acceptance No 12-0824.09
Expiration Date 04/08/2014
By
Miami Dade Product Control

HERMES F. NORERO P.E.
398 EAST DANIA BEACH BLVD. #338
DANIA BEACH, FL' 33004

DATE: 8-21-2012

FLORIDA No. 73778
FBPE CERT. OF AUTH. NO. 29578

METRO-DOOR Inc.
325 West 74 Place
Hialeah Florida, 33014
Phone 305-231-1101 Fax 305-231-1103

Series 10000
OUT SWING DOOR/W TRANSOM
LARGE MISSILE

ELEVATIONS

Revision			
No	Date	By	Description
1	01-22-09	R. P.	B.C.C.O.
2	03-13-09	R. P.	B.C.C.O.
3	07-25-12	JLA	2010 FBC CC

Date	10-21-2008
Scale	N.T.S.
Design by	G. S.
Drawing by	RICHARD
Checked by	G. S.

Drawing No.
SDR-10000-L.M

RESIDENTIAL OUTSWING DOOR

Hardware (Ashland W5110-stacT5 concealed multipoint active lock)

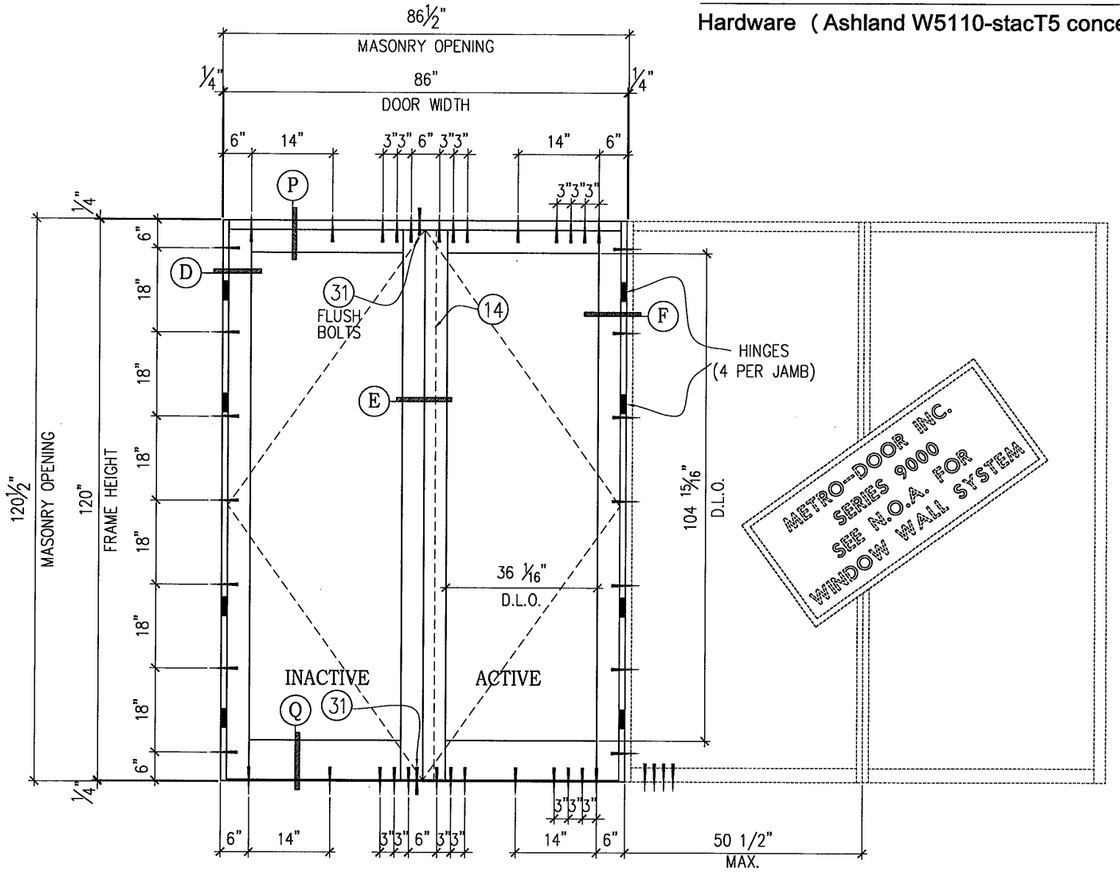

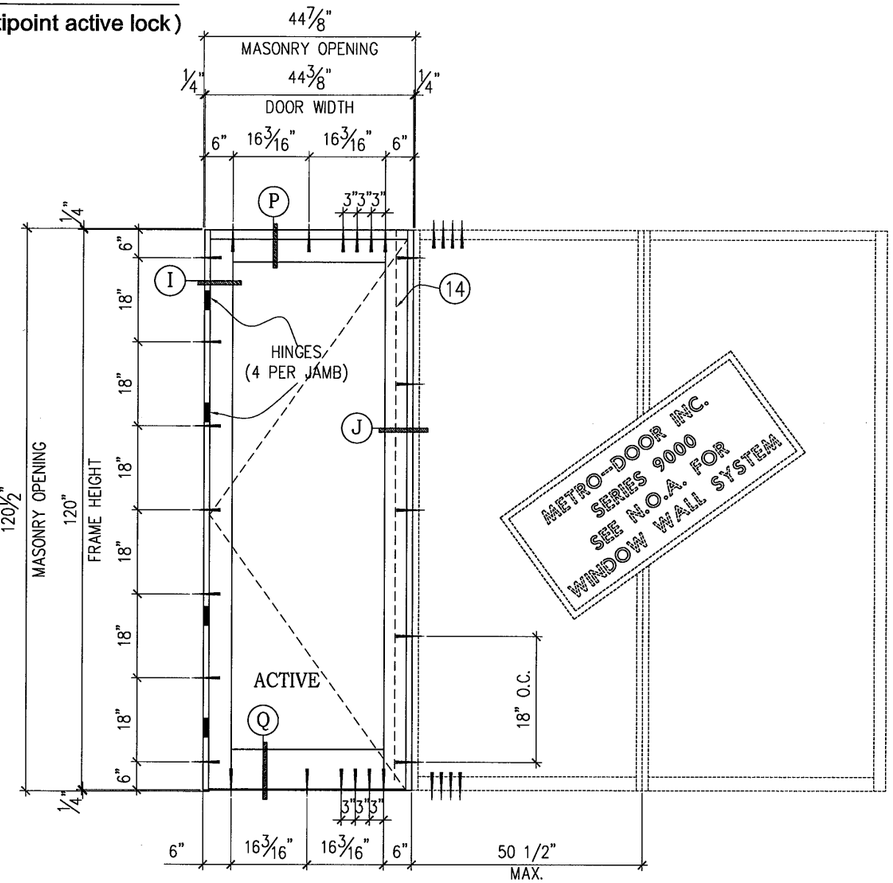

DESIGN LOAD CAPACITY (P.S.F.)		MAXIMUM D.L.O. WIDTH	MAXIMUM D.L.O. HEIGHT
POSITIVE	NEGATIVE		
*110	110	36 1/16"	104 15/16"
SEE NOTE 9 FOR WATER INFILTRATION * HIGH RESIDENTIAL SILL & ASTRAGAL			

NOTE: LISTED DESIGN PRESSURE FOR USE WITH GLAZING TYPE 1 ONLY.

PRODUCT REVISED
as complying with the Florida
Building Code
Acceptance No 12-0824.09
Expiration Date 04/08/2014
By
Miami Dade Product Control

HERMES F. NORERO P.E.
398 EAST DANIA BEACH BLVD. #338
DANIA BEACH, FL. 33004
DATE: 8-21-2012
FLORIDA No. 73778
FBPE CERT. OF AUTH. NO. 29578

METRO-DOOR Inc.
325 West 74 Place
Hialeah Florida, 33014
Phone 305-231-1101 Fax 305-231-1103

Series 10000
OUT SWING DOOR/W TRANSOM
LARGE MISSILE

ELEVATIONS

Revision			
No	Date	By	Description
1	01-22-09	R. P.	B.C.C.O.
2	03-13-09	R. P.	B.C.C.O.
3	07-25-12	JLA	2010 FBC CC

Date	10-21-2008
Scale	N.T.S.
Design by	G. S.
Drawing by	RICHARD
Checked by	G. S.

Drawing No.
SDR-10000-L.M

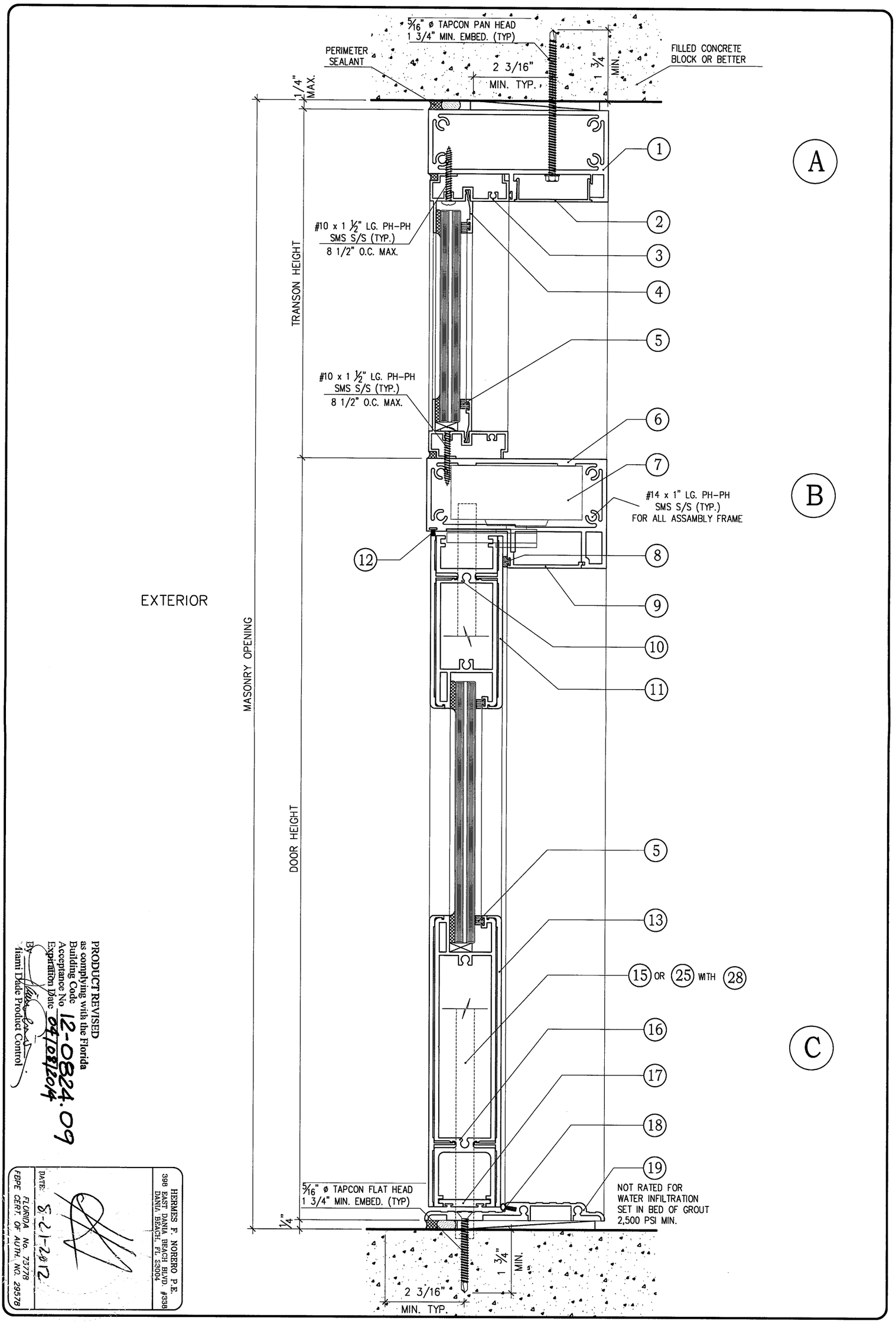

PRODUCT REVISED
as complying with the Florida
Building Code
Acceptance No 12-0824.09
Expiration Date 04/08/2014
By
Miami Dade Product Control

HERMES F. NORERO P.E.
398 EAST DANIA BEACH BLVD. #338
DANIA BEACH, FL 33004

DATE: 8-21-2012

FLORIDA No. 73778
FBPE CERT. OF AUTH. NO. 29578

Date	10-21-2008
Scale	N.T.S.
Design by	G. S.
Drawing by	RICHARD
Checked by	G. S.

Drawing No. SDR-10000-LM

Sheet 7 of 14

Revision

No	Date	By	Description
1	01-22-09	R. P.	B.C.C.O.
2	03-13-09	R. P.	B.C.C.O.
3	07-25-12	JLA	2010 FBC CC

Series 10000
OUT SWING DOOR /W TRANSOM
LARGE MISSILE

VERTICAL DETAIL

METRO-DOOR Inc.
325 West 74 Place
Hialeah Florida, 33014
Phone 305-231-1101 Fax 305-231-1103

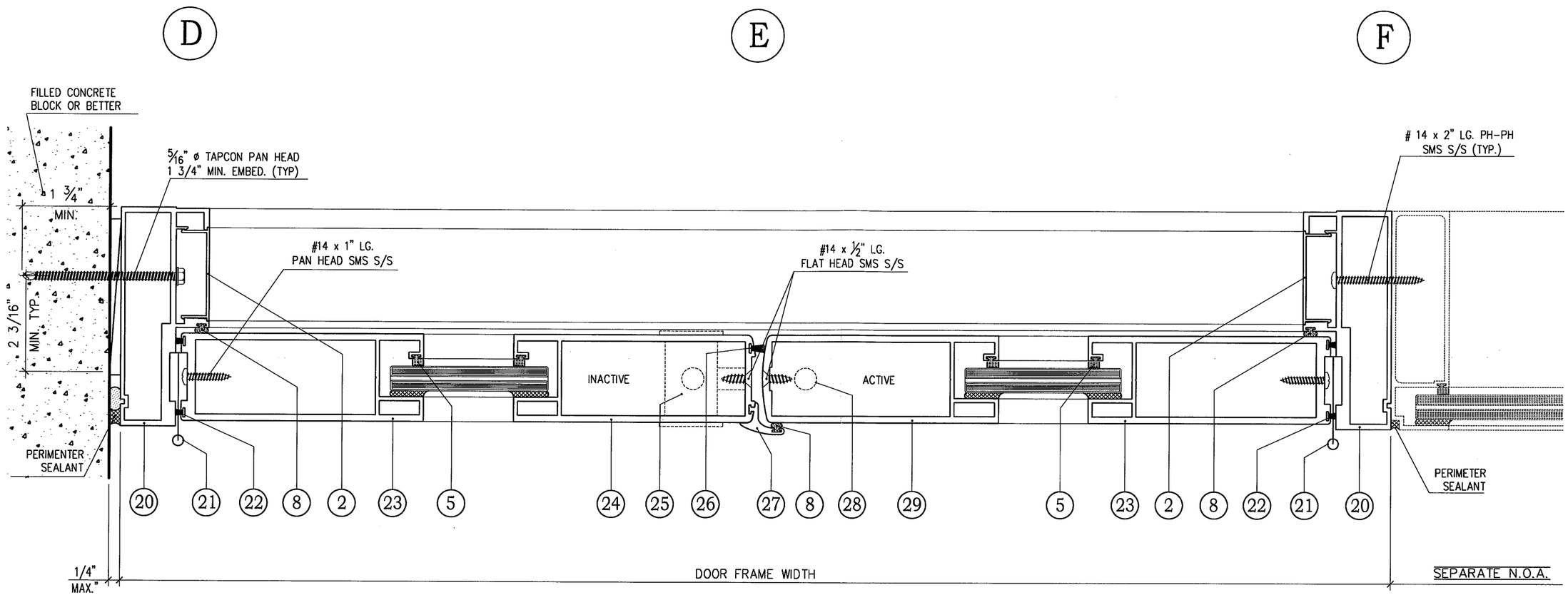

EXTERIOR

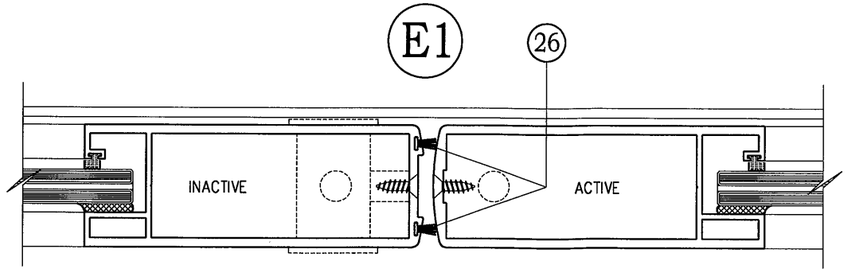

NOT RATED FOR WATER INFILTRATION

PRODUCT REVISED
as complying with the Florida
Building Code
Acceptance No 12-0824.09
Expiration Date 04/08/2014
By
Miami Dade Product Control

HERMES F. NORERO P.E.
398 EAST DANIA BEACH BLVD. #338
DANIA BEACH, FL 33004
DATE: 8-21-2012
FLORIDA No. 73778
FBPE CERT. OF AUTH. NO. 29578

METRO-DOOR Inc.
325 West 74 Place
Hialeah Florida, 33014
Phone 305-231-1101 Fax 305-231-1103

Series 10000
OUT SWING DOOR/W TRANSOM
LARGE MISSILE

HORIZONTAL DETAIL

Revision			
No	Date	By	Description
1	01-22-09	R. P.	B.C.C.O.
2	03-13-09	R. P.	B.C.C.O.
3	07-25-12	JLA	2010 FBC CC

Date	10-21-2008
Scale	N.T.S.
Design by	G. S.
Drawing by	RICHARD
Checked by	G. S.

Drawing No.
SDR-10000-L.M

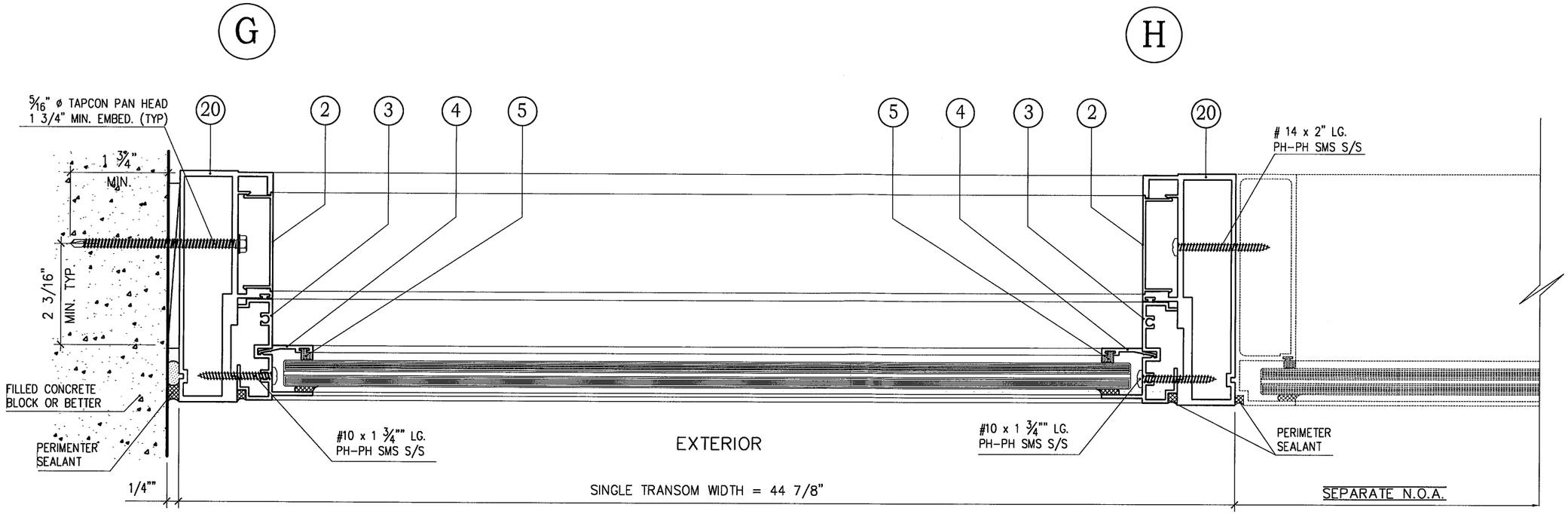

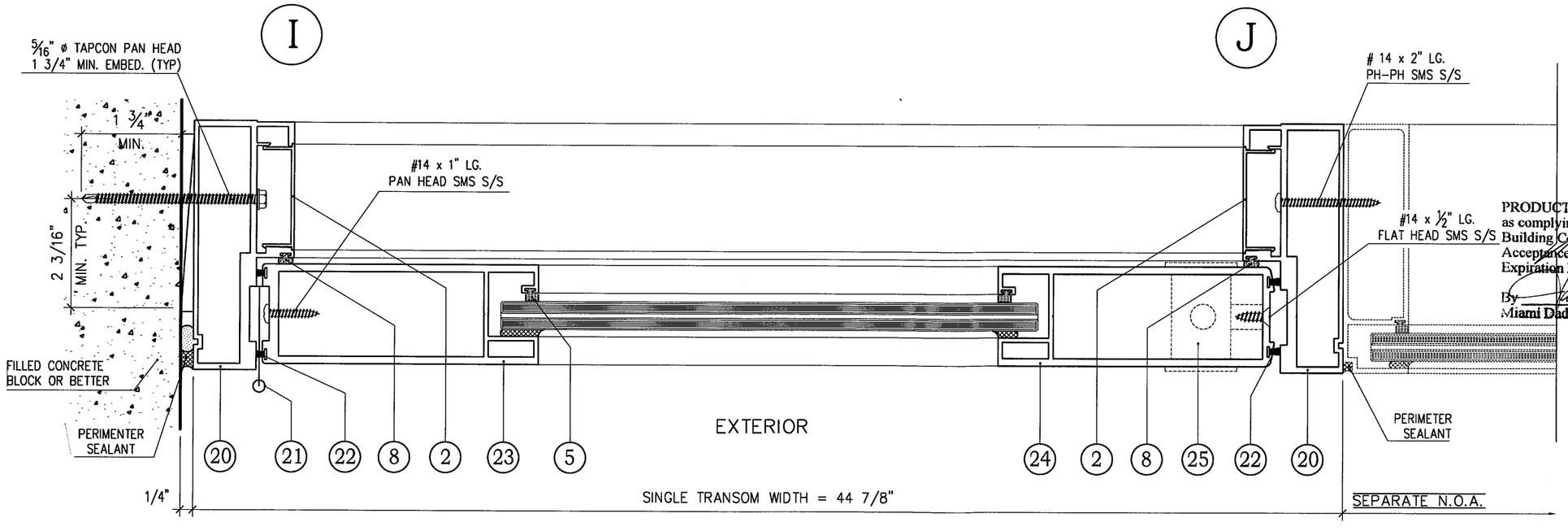

PRODUCT REVISED
as complying with the Florida Building Code
Acceptance No 12-0824.09
Expiration Date 04/08/2014
By
Miami Dade Product Control

HERMES F. NORERO P.E.
398 EAST DANIA BEACH BLVD. #338
DANIA BEACH, FL 33004

DATE: 8-21-2012

FLORIDA No. 73770
FBPE CERT. OF AUTH. NO. 29578

METRO-DOOR Inc.
325 West 74 Place
Hialeah Florida, 33014
Phone 305-231-1101 Fax 305-231-1103

Series 10000
OUT SWING DOOR/W TRANSOM
LARGE MISSILE

HORIZONTAL DETAIL

Revision			
No	Date	By	Description
1	01-22-09	R. P.	B.C.C.O.
2	03-13-09	R. P.	B.C.C.O.
3	07-25-12	JLA	2010 FBC CC

Date	10-21-2008
Scale	N.T.S.
Design by	G. S.
Drawing by	RICHARD
Checked by	G. S.

Drawing No.
SDR-10000-L.M

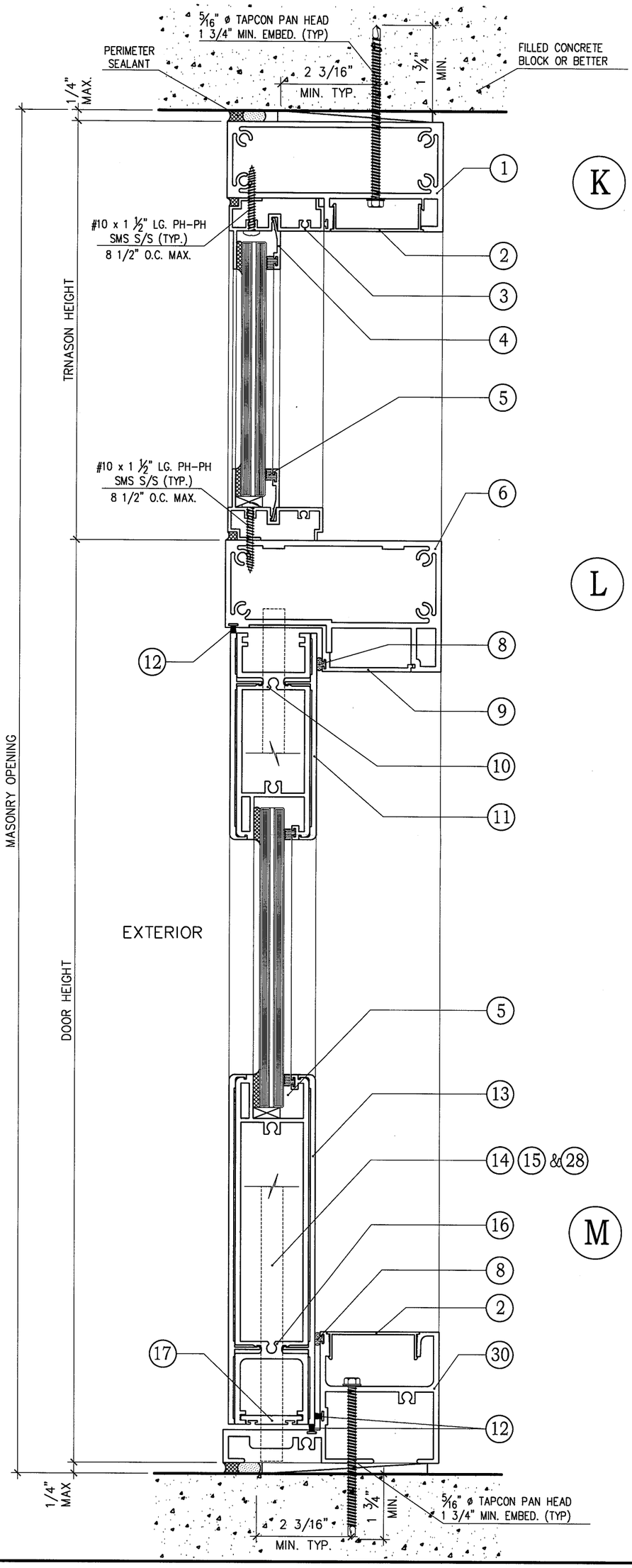

PRODUCT REVISED
as complying with the Florida Building Code
Acceptance No. 12-0824.09
Expiration Date 04/06/2014
By: Miami Dade Product Control

HERMES F. NORERO P.E.
FLORIDA No. 73778
FDPE CERT. OF AUTH. NO. 29578
DATE: 8-21-2012
388 EAST DANIA BEACH BLVD. #338
DANIA BEACH, FL 33004

Revision			
No	Date	By	Description
1	01-22-09	R. P.	B.C.C.O.
2	03-13-09	R. P.	B.C.C.O.
3	07-25-12	JLA	2010 FBC CC

Series 10000
OUT SWING DOOR/W TRANSOM
LARGE MISSILE

VERTICAL DETAILS

Date	10-21-2008
Scale	N.T.S.
Design by	G. S.
Drawing by	RICHARD
Checked by	G. S.

Drawing No.
SDR-10000-L.M

Sheet 10 of 14

METRO-DOOR Inc.
325 West 74 Place
Hialeah Florida, 33014
Phone 305-231-1101 Fax 305-231-1103

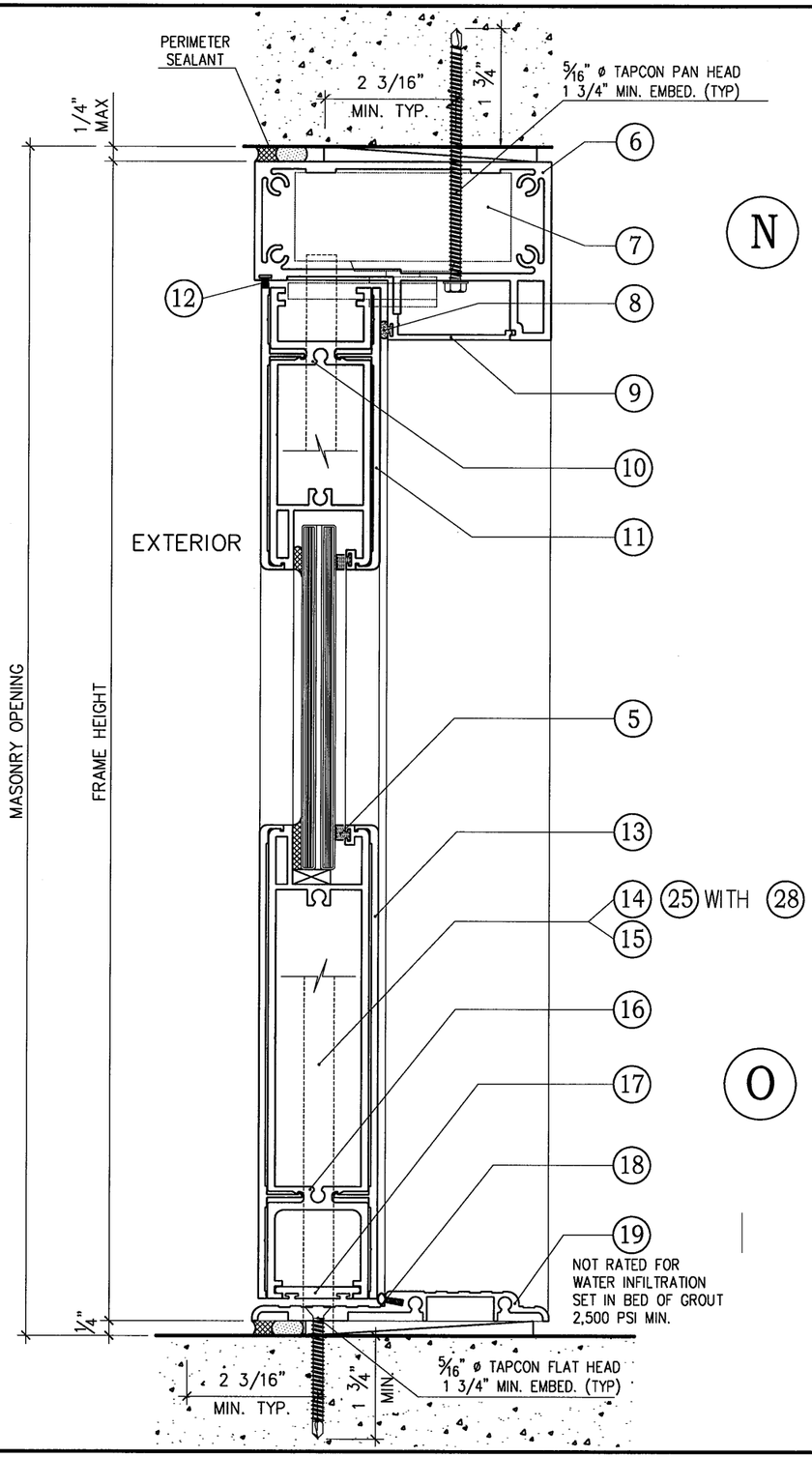

N

O

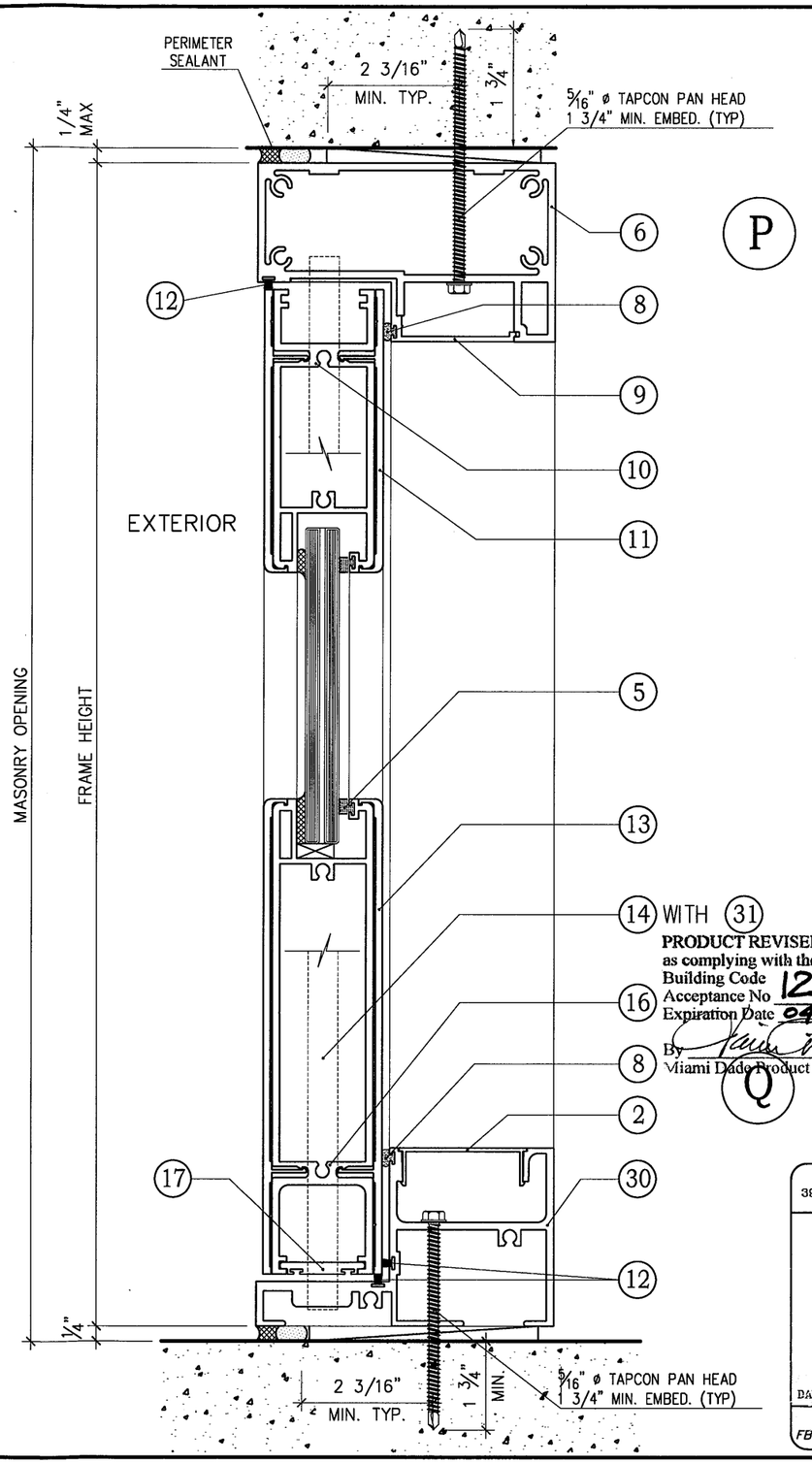

P

Q

PRODUCT REVISED
as complying with the Florida Building Code
Acceptance No 12-0824.09
Expiration Date 04/08/2014
By
Miami Dade Product Control

METRO-DOOR, Inc.
325 West 74 Place
Hialeah Florida, 33014
Phone 305-231-1101 Fax 305-231-1103

Series 10000
OUT SWING DOOR/W TRANSOM
LARGE MISSILE

VERTICAL DETAILS

Revision			
No	Date	By	Description
1	01-22-09	R. P.	B.C.C.O.
2	03-13-09	R. P.	B.C.C.O.
3	07-25-12	JLA	2010 FBC CC

Date	10-21-2008
Scale	N.T.S.
Design by	G. S.
Drawing by	RICHARD
Checked by	G. S.

Drawing No.
SDR-10000-L.M

Sheet 11 of 14

HERMES F. NORERO P.E.
398 EAST DANIA BEACH BLVD. #338
DANIA BEACH, FL 33004

DATE: 8-21-2012

FLORIDA No. 73778
FBPE CERT. OF AUTH. NO. 29578

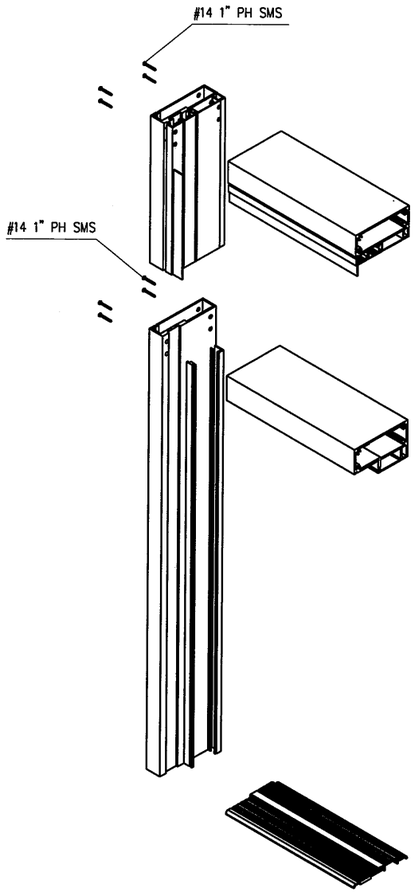

DOOR FRAME CONSTRUCTION

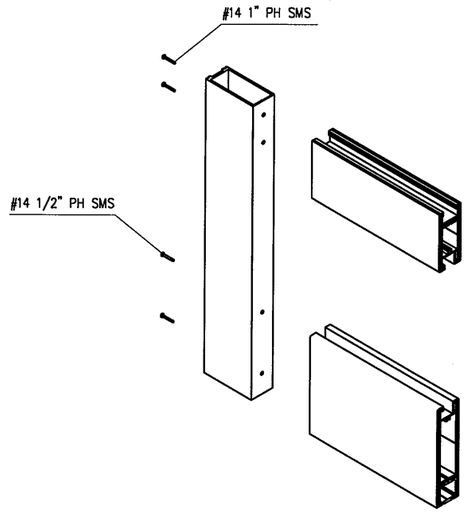

DOOR PANEL CONSTRUCTION

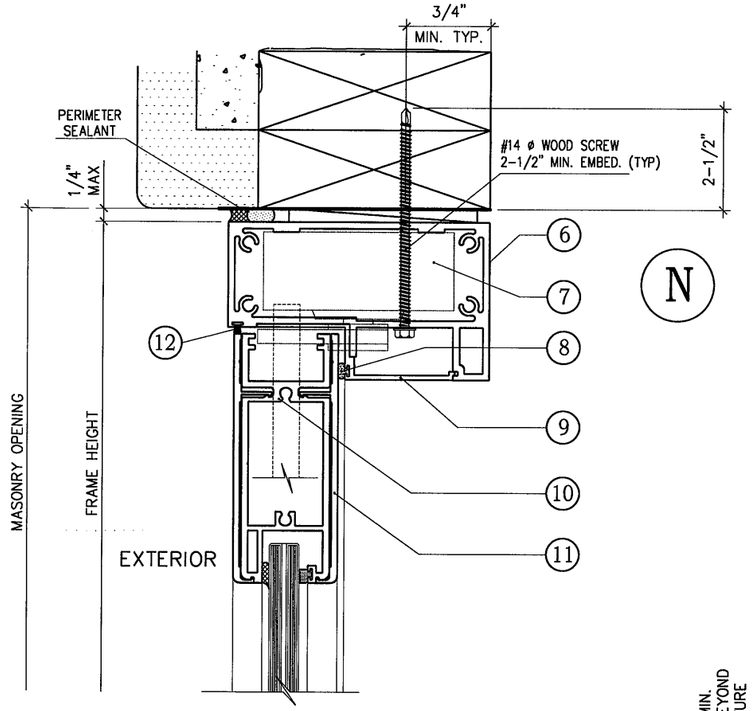

SIMILAR FOR ALL WOOD INSTALLATION

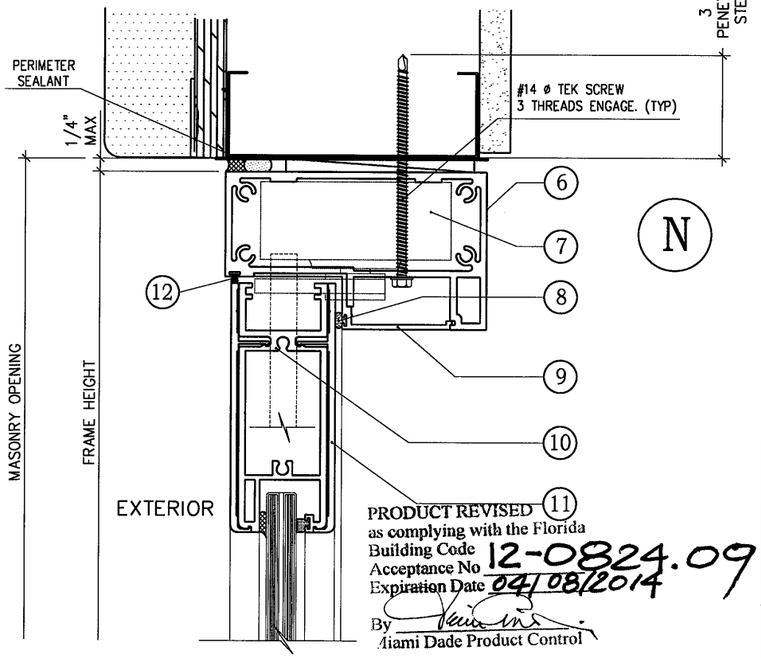

SIMILAR FOR ALL STEEL INSTALLATION

PRODUCT REVISED
as complying with the Florida Building Code
Acceptance No 12-0824.09
Expiration Date 04/08/2014
By Miami Dade Product Control

HERMES F. NORERO P.E.
398 EAST DANIA BEACH BLVD. #338
DANIA BEACH, FL 33004

DATE: 8-21-2012

FLORIDA No. 73778
FBPE CERT. OF AUTH. NO. 29578

METRO-DOOR Inc.
325 West 74 Place
Hialeah Florida, 33014
Phone 305-231-1101 Fax 305-231-1103

Series 10000
OUT SWING DOOR/W TRANSOM
LARGE MISSILE

VERTICAL DETAILS

Revision			
No	Date	By	Description
1	01-22-09	R. P.	B.C.C.O.
2	03-13-09	R. P.	B.C.C.O.
3	07-25-12	JLA	2010 FBC CC

Date	10-21-2008
Scale	N.T.S.
Design by	G. S.
Drawing by	RICHARD
Checked by	G. S.

Drawing No.
SDR-10000-L.M

Sheet 12 of 14

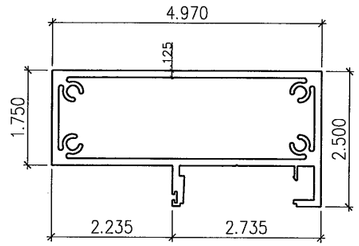

1 TRANSON HEAD
EXT.#10000-05

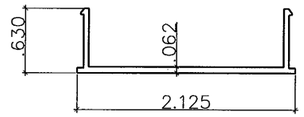

2 COVER
EXT.#3000-07

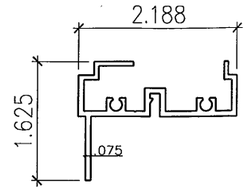

3 TRANSON WINDOW
EXT.#10000-14

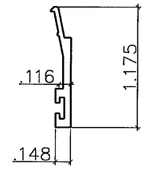

4 GLAZING BEAD
EXT.#5000-08

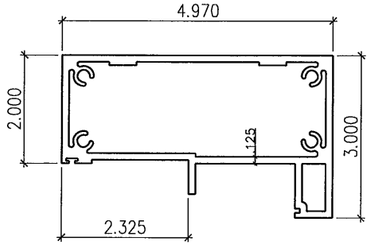

6 HEAD
EXT.#10000-01

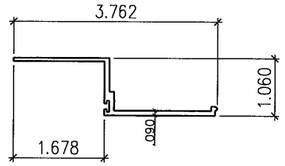

9 COVER HEAD
EXT.#10000-04

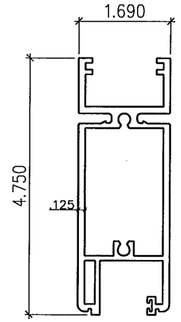

HEAD PANEL
EXT.#10000-06

10

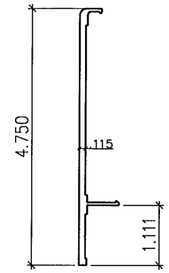

11 HEAD PANEL COVER
EXT.#10000-10

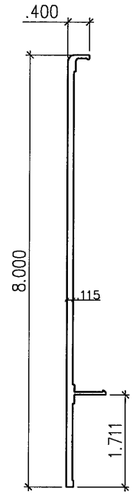

SILL PANEL COVER
EXT.#10000-11

13

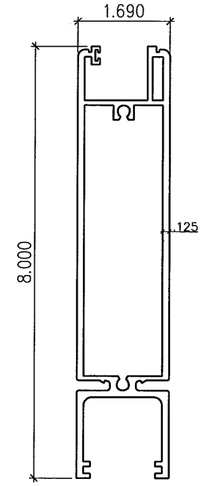

SILL PANEL
EXT.#10000-07

16

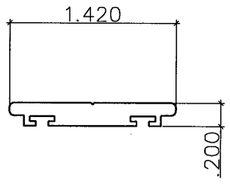

17 BOTTOM PANEL
EXT.#10000-12

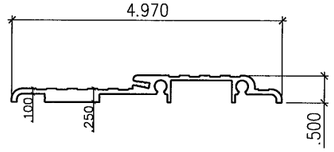

19 SMALL SILL
EXT.#10000-13

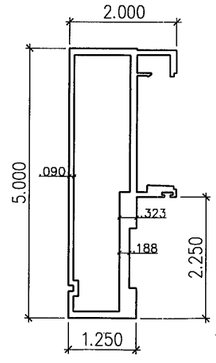

JAMB
EXT.#10000-03

20

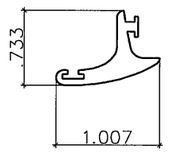

27 TWO DOOR PANEL
EXT.#10000-17

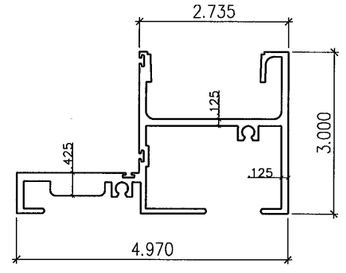

30 HIGH RESIDENTIAL SILL
EXT.#10000-02

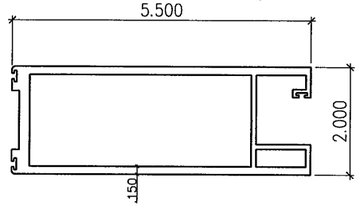

23 HINGE JAMB PANEL
EXT.#10000-08

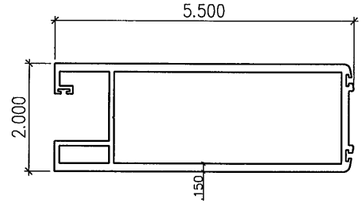

24 LOCK JAMB PANEL
EXT.#10000-09

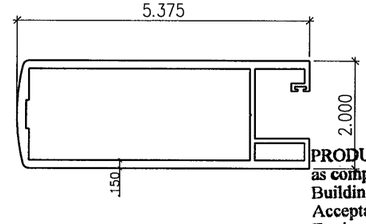

29 DOUBLE DOOR PANEL
EXT.#10000-15

PRODUCT REVISED
as complying with the Florida
Building Code
Acceptance No 12-0824.09
Expiration Date 04/08/2014
By
Miami Dade Product Control

HERMES F. NORERO P.E.
398 EAST DANIA BEACH BLVD. #338
DANIA BEACH, FL 33004

DATE: 8-21-2012

FLORIDA No. 73778
FBPE CERT. OF AUTH. NO. 29578

METRO-DOOR Inc.
325 West 74 Place
Hialeah Florida, 33014
Phone 305-231-1101 Fax 305-231-1103

Series 10000
OUT SWING DOOR/W TRANSOM
LARGE MISSILE

EXTRUSIONS

Revision			
No	Date	By	Description
1	01-22-09	R. P.	B.C.C.O.
2	03-13-09	R. P.	B.C.C.O.
3	07-25-12	JLA	2010 FBC CC

Date	10-21-2008
Scale	N.T.S.
Design by	G. S.
Drawing by	RICHARD
Checked by	G. S.

Drawing No.
SDR-10000-L.M

ITEM NUMBER	PART NUMBER	PART NAME	REMARKS	ALLOY & TEMPERED
1	10000-05	TRANSOM HEAD	FRAME DOOR	6105-T5
2	3000-07	COVER	FRAME DOOR	6105-T5
3	10000-14	TRANSOM WINDOW	PANEL WINDOW	6105-T5
4	5000-08	GLAZING BEAD	PANEL WINDOW	6105-T5
5	CGS-01	GLASS SPACING	PROTOTYPE PLASTIC EXTRUSION	
6	10000-01	HEAD	FRAME DOOR	6105-T5
7		CONCEALED CLOSER # 900A HEAVY	DNW	
8		Q-LONG 300T-190	SCHLEGEL	
9	10000-04	COVER HEAD	FRAME DOOR	6105-T5
10	10000-06	HEAD PANEL	PANEL DOOR	6105-T5
11	10000-10	HEAD PANEL COVER	PANEL DOOR	6105-T5
12		.187 X .320 SOFT-FIN	ULTRAFAB	
13	10000-11	SILL PANEL COVER	PANEL DOOR	6105-T5
14		ASHLAND MULTI-POINT LOCK	COMMERCIAL "STANDARD" HARDWARE	ASHLAND
15	33/3547A	"PANIC" HARDWARE	BY VON DUPRIN	6105-T5
16	10000-07	SILL PANEL	PANEL DOOR	6105-T5
17	10000-12	BOTTOM PANEL	DOOR PANEL	6105-T5
18		#E-101	ULTRAFAB	
19	10000-13	SMALL SILL, NOT RATED FOR WATER	DOOR SILL	6105-T5
20	10000-03	JAMB	DOOR FRAME	6105-T5
21		BUTT HINGE #304 S/S 4 ½" x 4"	DWH	
22		FIN-SEAL .187 x .250 HT.	ULTRAFAB	
23	10000-08	HINGE JAMB PANEL	DOOR PANEL	6105-T5
24	10000-09	LOCK JAMB PANEL	DOOR PANEL	6105-T5
25		LOCKSAL & BIG THUMBTURN CYLINDER (TB3002A-WH)	REGENT	
26		FIN SEAL .400 X .187	ULTRAFAB	
27	10000-17	TWO DOOR PANEL	DOOR PANEL	6105-T5
28		2 POINT BOLT WITH ZAMAC THUMBTURN (ML 1880)	REGENT	
29	10000-15	DOUBLE DOOR PANEL	DOOR PANEL	6105-T5
30	10000-02	RESIDENTIAL HIGH SILL	DOOR FRAME	6105-T5
31		ASHLAND FLUSH BOLTS	INACTIVE PANEL	

PRODUCT REVISED
as complying with the Florida
Building Code
Acceptance No 12-0824.09
Expiration Date 04/08/2014
By
Miami Dade Product Control

HERMES F. NORERO P.E.
398 EAST DANIA BEACH BLVD. #338
DANIA BEACH, FL 33004

DATE: 8-21-2012

FLORIDA No. 73778
FBPE CERT. OF AUTH. NO. 29578

METRO-DOOR Inc.
325 West 74 Place
Hialeah Florida, 33014
Phone 305-231-1101 Fax 305-231-1103

Series 10000
OUT SWING DOOR/W TRANSOM
LARGE MISSILE

LIST TABLE

Revision			
No	Date	By	Description
1	01-22-09	R. P.	B.C.C.O.
2	03-13-09	R. P.	B.C.C.O.
3	07-25-12	JLA	2010 FBC CC

Date	10-21-2008
Scale	N.T.S.
Design by	G. S.
Drawing by	RICHARD
Checked by	G. S.

Drawing No.
SDR-10000-L.M