MIAMI-DADE COUNTY
PRODUCT CONTROL SECTION
11805 SW 26 Street, Room 208
Miami, Florida 33175-2474
T (786) 315-2590 F (786) 315-2599
www.miamidade.gov/economy

DEPARTMENT OF REGULATORY AND ECONOMIC RESOURCES (RER)
BOARD AND CODE ADMINISTRATION DIVISION

NOTICE OF ACCEPTANCE (NOA)

The Airolite Company
P.O. Box 410
Schofield, WI 54476

SCOPE:

This NOA is being issued under the applicable rules and regulations governing the use of construction materials. The documentation submitted has been reviewed and accepted by Miami-Dade County RER-Product Control Section to be used in Miami Dade County and other areas where allowed by the Authority Having Jurisdiction (AHJ).

This NOA shall not be valid after the expiration date stated below. The Miami-Dade County Product Control Section (In Miami Dade County) and/or the AHJ (in areas other than Miami Dade County) reserve the right to have this product or material tested for quality assurance purposes. If this product or material fails to perform in the accepted manner, the manufacturer will incur the expense of such testing and the AHJ may immediately revoke, modify, or suspend the use of such product or material within their jurisdiction. RER reserves the right to revoke this acceptance, if it is determined by Miami-Dade County Product Control Section that this product or material fails to meet the requirements of the applicable building code.

This product is approved as described herein, and has been designed to comply with the Florida Building Code, including the High Velocity Hurricane Zone.

DESCRIPTION: Model K6746MD Aluminum Louver with and without VCD-40 Damper

APPROVAL DOCUMENT: Drawing No. **K6746MD**, titled "K6746MD Louver", sheets 1 through 22 of 22, dated 08/25/2010, prepared by Rice Engineering, signed and sealed by L. David Rice, P.E., bearing the Miami-Dade County Product Control renewal stamp with the Notice of Acceptance number and expiration date by the Miami-Dade County Product Control Section.

MISSILE IMPACT RATING: Large and Small Missile Impact Resistant

LABELING: Each unit shall bear a permanent label with the manufacturer's name or logo, Schofield, WI or Frankfort, KY, model/series, and following statement: "Miami-Dade County Product Control Approved", unless otherwise noted herein.

RENEWAL of this NOA shall be considered after a renewal application has been filed and there has been no change in the applicable building code negatively affecting the performance of this product.

TERMINATION of this NOA will occur after the expiration date or if there has been a revision or change in the materials, use, and/or manufacture of the product or process. Misuse of this NOA as an endorsement of any product, for sales, advertising or any other purposes shall automatically terminate this NOA. Failure to comply with any section of this NOA shall be cause for termination and removal of NOA.

ADVERTISEMENT: The NOA number preceded by the words Miami-Dade County, Florida, and followed by the expiration date may be displayed in advertising literature. If any portion of the NOA is displayed, then it shall be done in its entirety.

INSPECTION: A copy of this entire NOA shall be provided to the user by the manufacturer or its distributors and shall be available for inspection at the job site at the request of the Building Official.

This NOA **renews NOA # 10-0921.07** and consists of this page 1 and evidence page E-1, as well as approval document mentioned above.

The submitted documentation was reviewed by **Carlos M. Utrera, P.E.**

MIAMI-DADE COUNTY APPROVED

11/08/2012

NOA No. 12-0830.05
Expiration Date: December 6, 2017
Approval Date: November 15, 2012

NOTICE OF ACCEPTANCE: EVIDENCE SUBMITTED

A. DRAWINGS *"Submitted under NOA # 10-0921.07"*

1. Drawing No. **K6746MD**, titled "K6746MD Louver", sheets 1 through 22 of 22, dated 08/25/2010, prepared by Rice Engineering, signed and sealed by L. David Rice, P.E.

B. TESTS *"Submitted under NOA # 08-0229.06"*

1. Test report on Wind Driven Rain Resistance per FBC, TAS 110(A)-95, prepared by Architectural Testing, Inc., Test Report No. **79201.01-109-18,** dated 02/05/2008, signed and sealed by Michael D. Stremmel, P.E.

"Submitted under NOA # 07-1015.07"

2. Test reports on 1) Uniform Static Air Pressure Test, Loading per FBC TAS 202-94
   2) Large Missile Impact Test per FBC, TAS 201-94
   3) Cyclic Wind Pressure Loading per FBC, TAS 203-94

   along with marked-up drawings and installation diagram of Series/Model ESD-635D, fixed aluminum louvers, prepared by Architectural Testing, Inc., Test Report No. **74297.01-602-18**, dated 09/25/2007, signed and sealed by Joseph A. Reed, P.E.
3. Test report on Standard Test Methods for Tensile Testing of Metallic Materials, per ASTM E8-03, prepared by Architectural Testing, Inc., Test Report No.**74297.02-602-18**, dated 10/01/2007, signed and sealed by Joseph A. Reed, P.E.

C. CALCULATIONS *"Submitted under NOA # 10-0921.07"*

1. Structural calculations, prepared by Rice Engineering, dated 09/03/2010, signed and sealed by L. David Rice, P.E.

D. QUALITY ASSURANCE

1. Miami-Dade Department of Regulatory and Economic Resources (RER)

E. MATERIAL CERTIFICATIONS

1. None.

F. STATEMENTS

1. Statement letter of code conformance to 2010 FBC issued by Rice Engineering, dated 11/06/2012, signed and sealed by L. David Rice, P.E.

"Submitted under NOA # 10-0921.07"

2. Statement letters of conformance and no financial interest issued by Rice Engineering, dated 09/03/2010, signed and sealed by L. David Rice, P.E.
3. Private labeling agreement dated 10/12/2007.

11/08/2012

Carlos M. Utrera, P.E.
Product Control Examiner
NOA No. 12-0830.05
Expiration Date: December 6, 2017
Approval Date: November 15, 2012

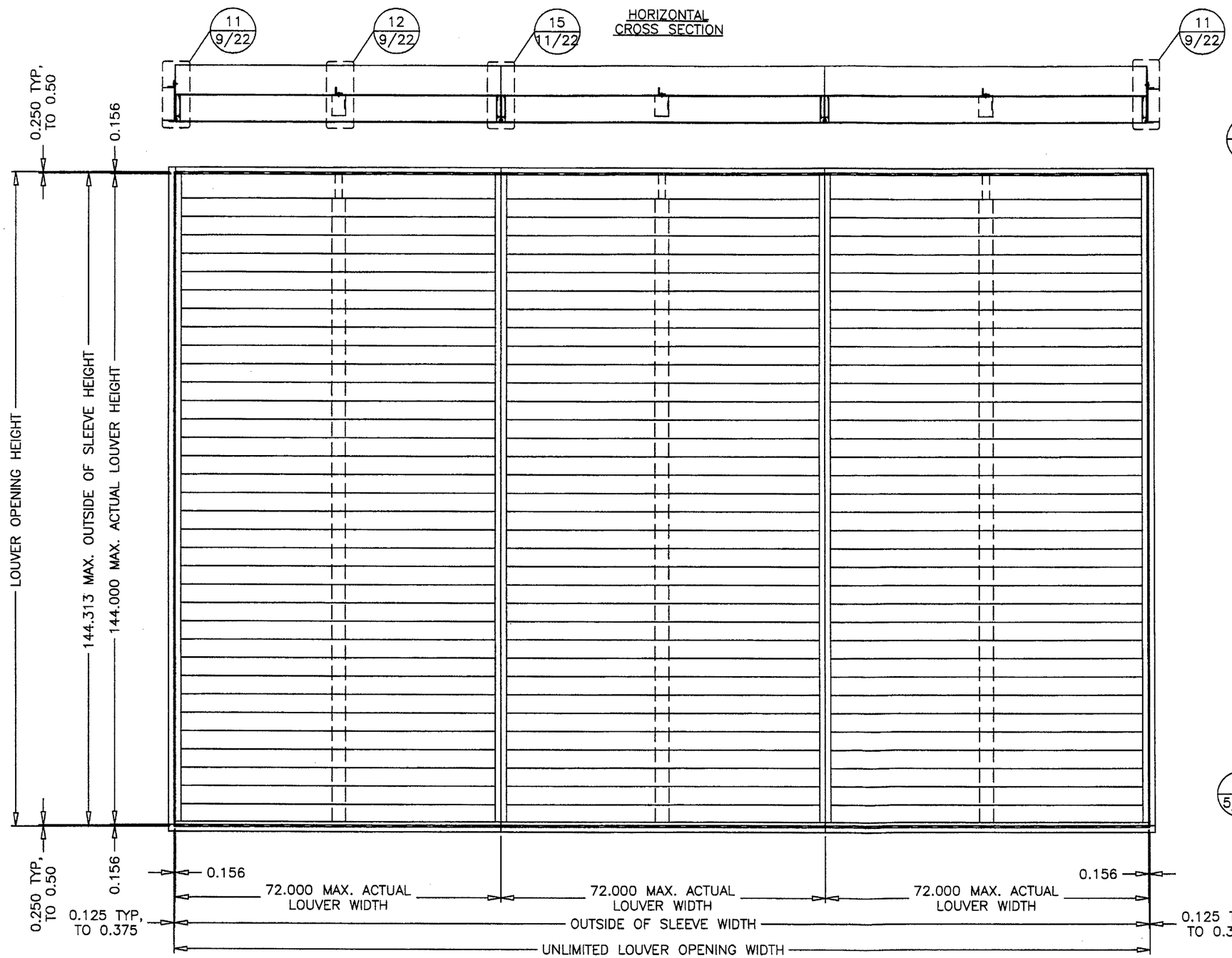

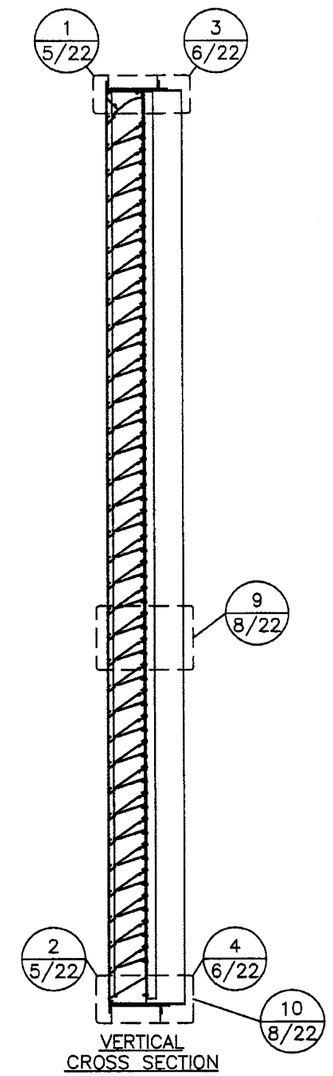

PRODUCT RENEWED
as complying with the Florida Building Code
Acceptance No 12-0830.05
Expiration Date 12/06/2017
By
Miami Dade Product Control

PRODUCT REVISED
as complying with the Florida Building Code
Acceptance No 10-0921.07
Expiration Date 12/06/2012
By
Miami Dade Product Control Division

DATE	8/25/2010
DRAWN BY	MES
SCALE	1:24
SHEET NO.	1 OF 22
CAD DRAWING NO.	K6746MD

AIROLITE
The look that works™
SCHOFIELD, WISCONSIN 54476
715-359-6171

TITLE
K6746MD LOUVER
FLANGE FRAME
SLEEVE MOUNT
ELEVATION

RICE ENGINEERING
105 School Creek Trail
Luxemburg, WI 54217
Phone: 920.845.1042
Fax: 920.845.1048
www.rice-inc.com

Florida Firm No: F-01000005061
Certificate of Authorization: #9090
L. David Rice
Registration No: 50923

L. DAVID RICE
LICENSE
No. 50923
STATE OF
FLORIDA
PROFESSIONAL ENGINEER

SEP 0 3 2010

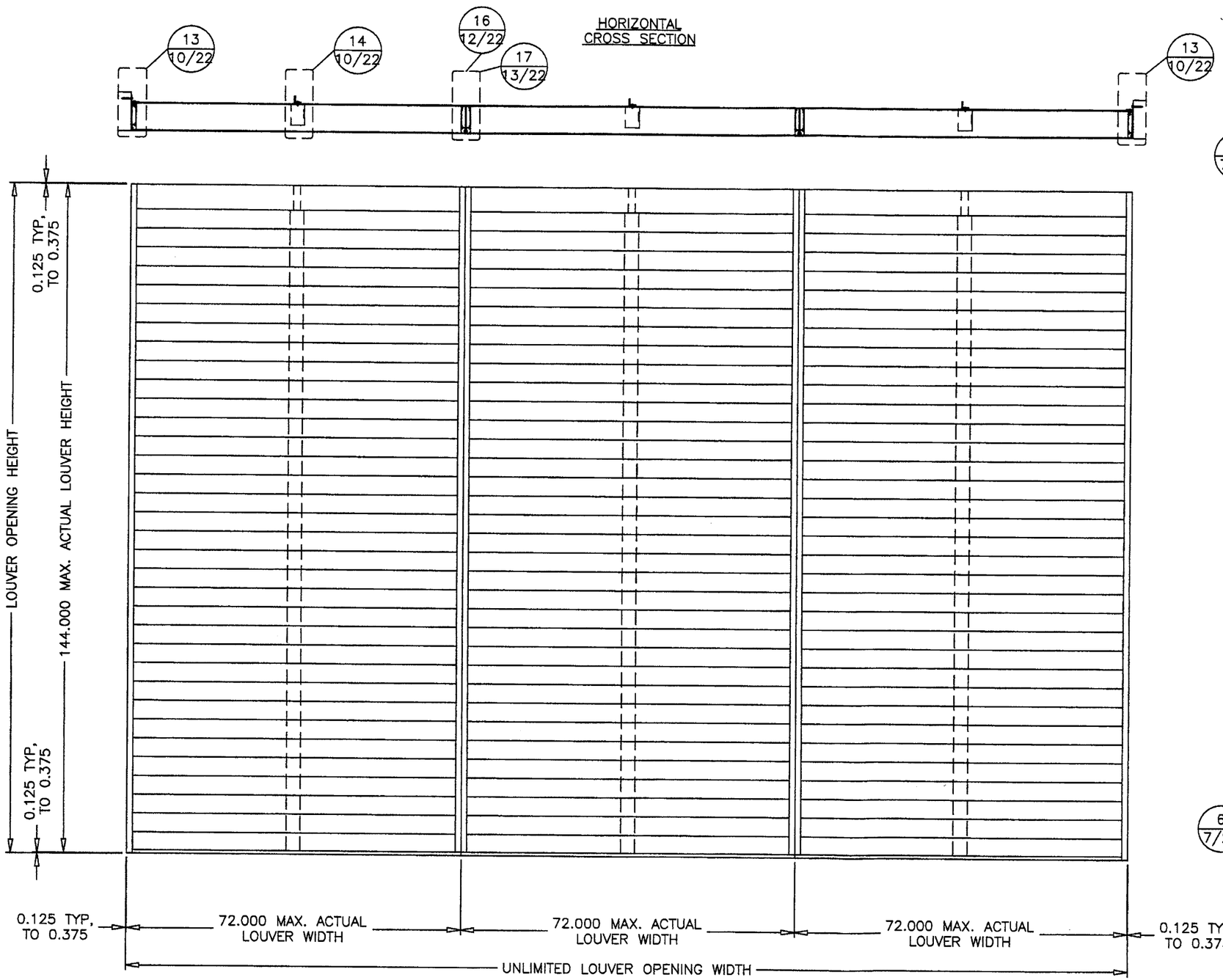

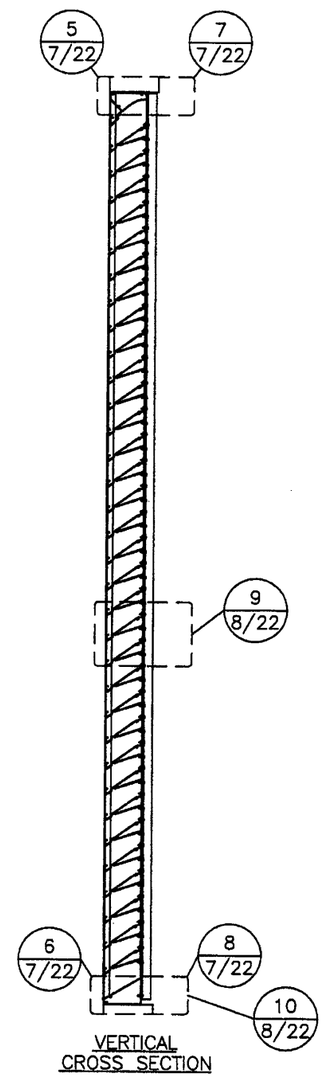

PRODUCT RENEWED
as complying with the Florida Building Code
Acceptance No 12-0830.05
Expiration Date 12/06/2017
By
Miami Dade Product Control

PRODUCT REVISED
as complying with the Florida Building Code
Acceptance No 10-0921.07
Expiration Date 12/06/2012
By
Miami Dade Product Control Division

DATE	8/25/2010
DRAWN BY	MES
SCALE	1:24
SHEET NO.	2 OF 22
CAD DRAWING NO.	K6746MD

AIROLITE
The look that works.™
SCHOFIELD, WISCONSIN 54476
715-359-6171

TITLE
K6746MD LOUVER
CONTINUOUS ANGLE MOUNT
ELEVATION

RICE ENGINEERING
105 School Creek Trail
Luxemburg, WI 54217
Phone: 920.845.1042
Fax: 920.845.1048
www.rice-inc.com

Florida Firm No: F-01000005061
Certificate of Authorization: #9090
L. David Rice
Registration No: 50923

L. DAVID RICE
LICENSE
No. 50923
STATE OF FLORIDA
PROFESSIONAL ENGINEER

SEP 03 2010

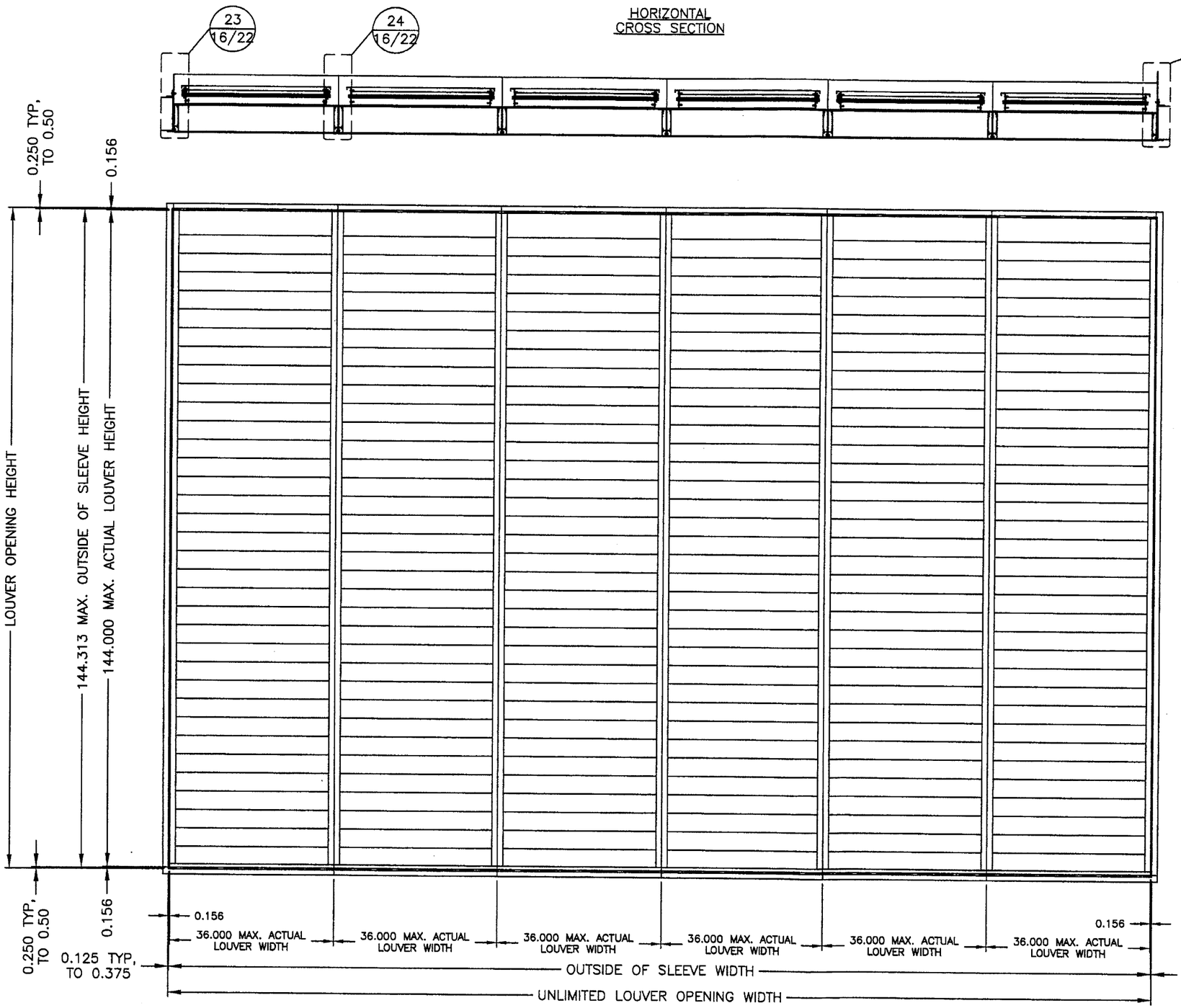

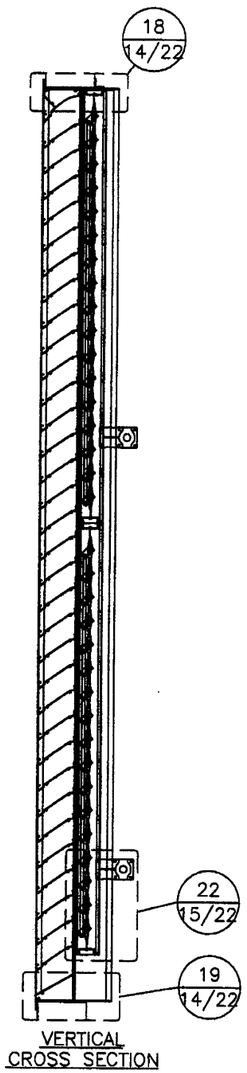

PRODUCT RENEWED
as complying with the Florida Building Code
Acceptance No 12-0830.05
Expiration Date 12/06/2017
By
Miami-Dade Product Control

PRODUCT REVISED
as complying with the Florida Building Code
Acceptance No 10-0924.07
Expiration Date 12/06/2012
By
Miami Dade Product Control Division

DRAWN BY	MES
DATE	8/25/2010
SCALE	1:24
SHEET NO.	3 OF 22
CAD DRAWING NO.	K6746MD

AIROLITE
The look that works™
SCHOFIELD, WISCONSIN 54476
715-359-6171

TITLE K6746MD LOUVER W/VCD-40
FLANGE FRAME
SLEEVE MOUNT
ELEVATION

RICE ENGINEERING
105 School Creek Trail
Luxemburg, WI 54217
Phone: 920.845.1042
Fax: 920.845.1048
www.rice-inc.com

Florida Firm No: F-01000005061
Certificate of Authorization: #9090
L. David Rice
Registration No: 50923

L. DAVID RICE
LICENSE
No. 50923
STATE OF FLORIDA
PROFESSIONAL ENGINEER

SEP 0 3 2010

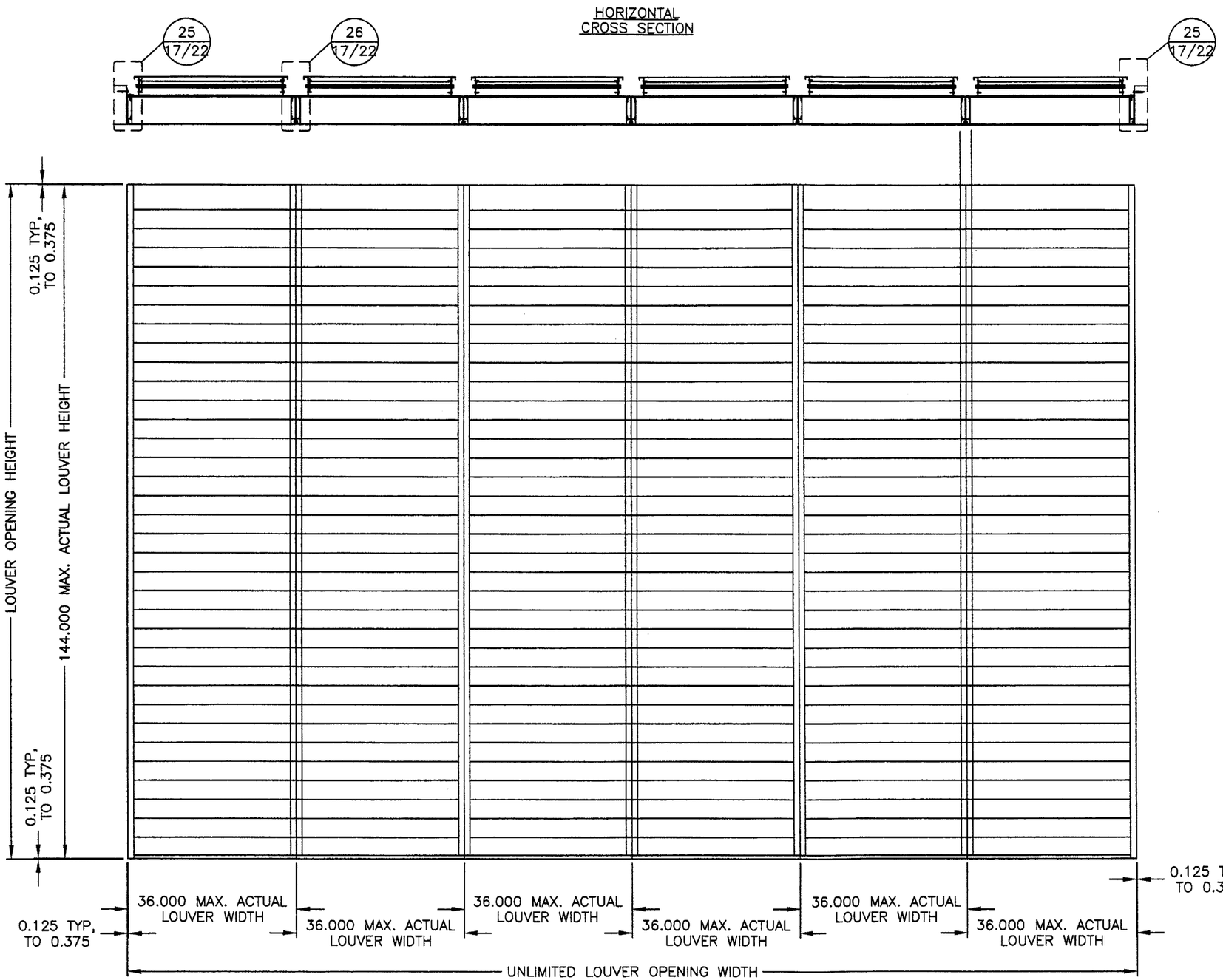

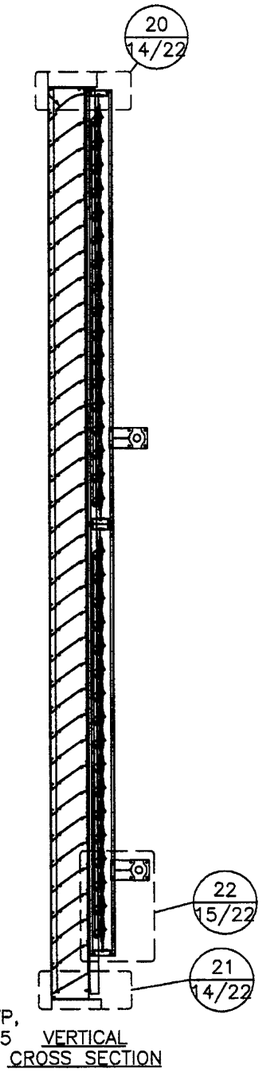

PRODUCT RENEWED
as complying with the Florida
Building Code
Acceptance No 12-0830.05
Expiration Date 12/06/2017
By
Miami Dade Product Control

PRODUCT REVISED
as complying with the Florida
Building Code
Acceptance No 10-0921.07
Expiration Date 12/06/2012
By
Miami Dade Product Control
Division

DRAWN BY MES	DATE 8/25/2010
SCALE 1:24	
SHEET NO. 4 OF 22	
CAD DRAWING NO. K6746MD	

AIROLITE
The look that works.™
SCHOFIELD, WISCONSIN 54476
715-359-6171

K6746MD LOUVER W/VCD-40
CONTINUOUS ANGLE MOUNT

ELEVATION

RICE
ENGINEERING
105 School Creek Trail
Luxemburg, WI 54217
Phone: 920.845.1042
Fax: 920.845.1048
www.rice-inc.com

Florida Firm No: F-01000005061
Certificate of Authorization: #9090
L. David Rice
Registration No: 50923

L. DAVID RICE
LICENSED
No. 50923
STATE OF
FLORIDA
PROFESSIONAL ENGINEER

SEP 03 2010

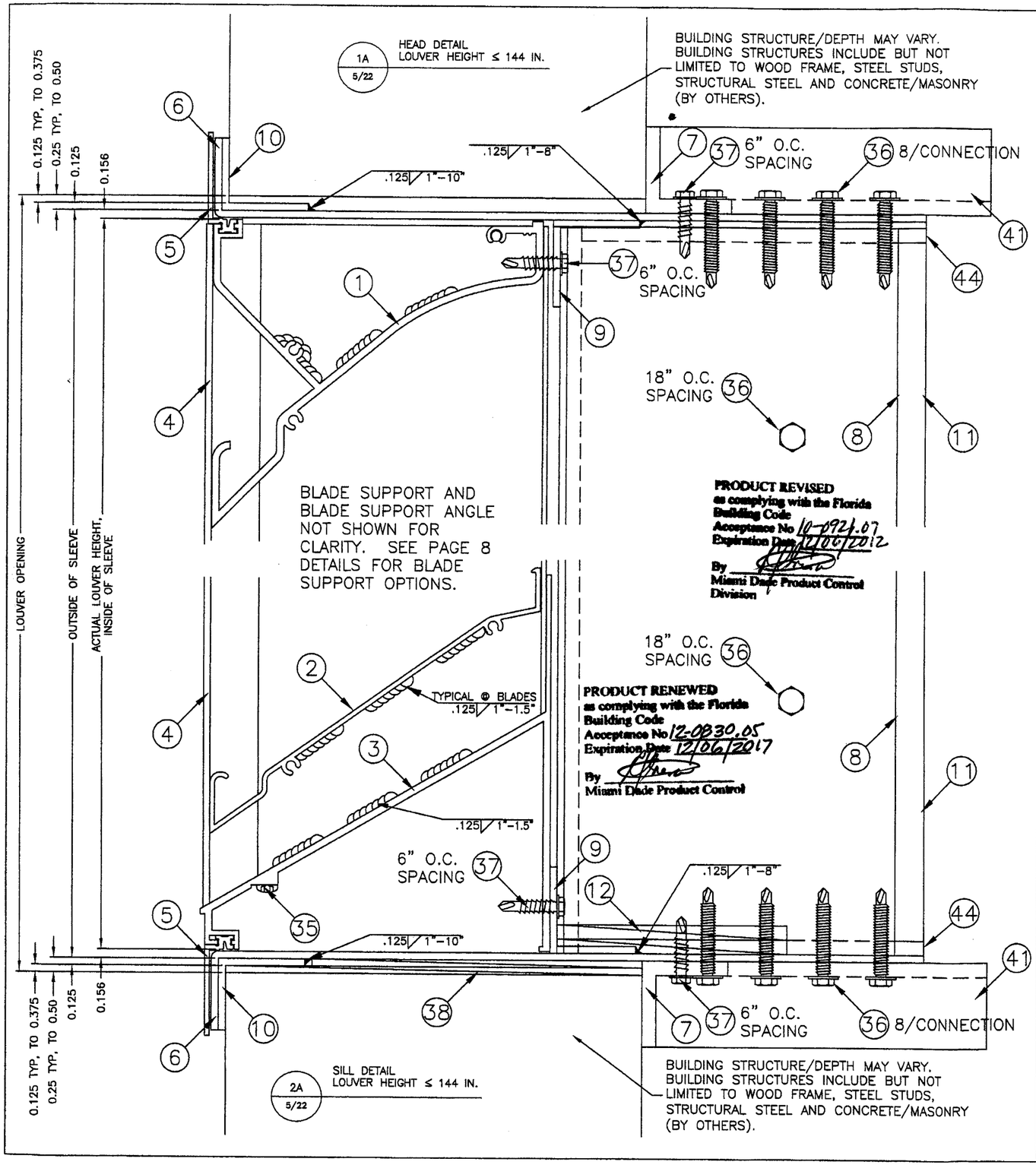

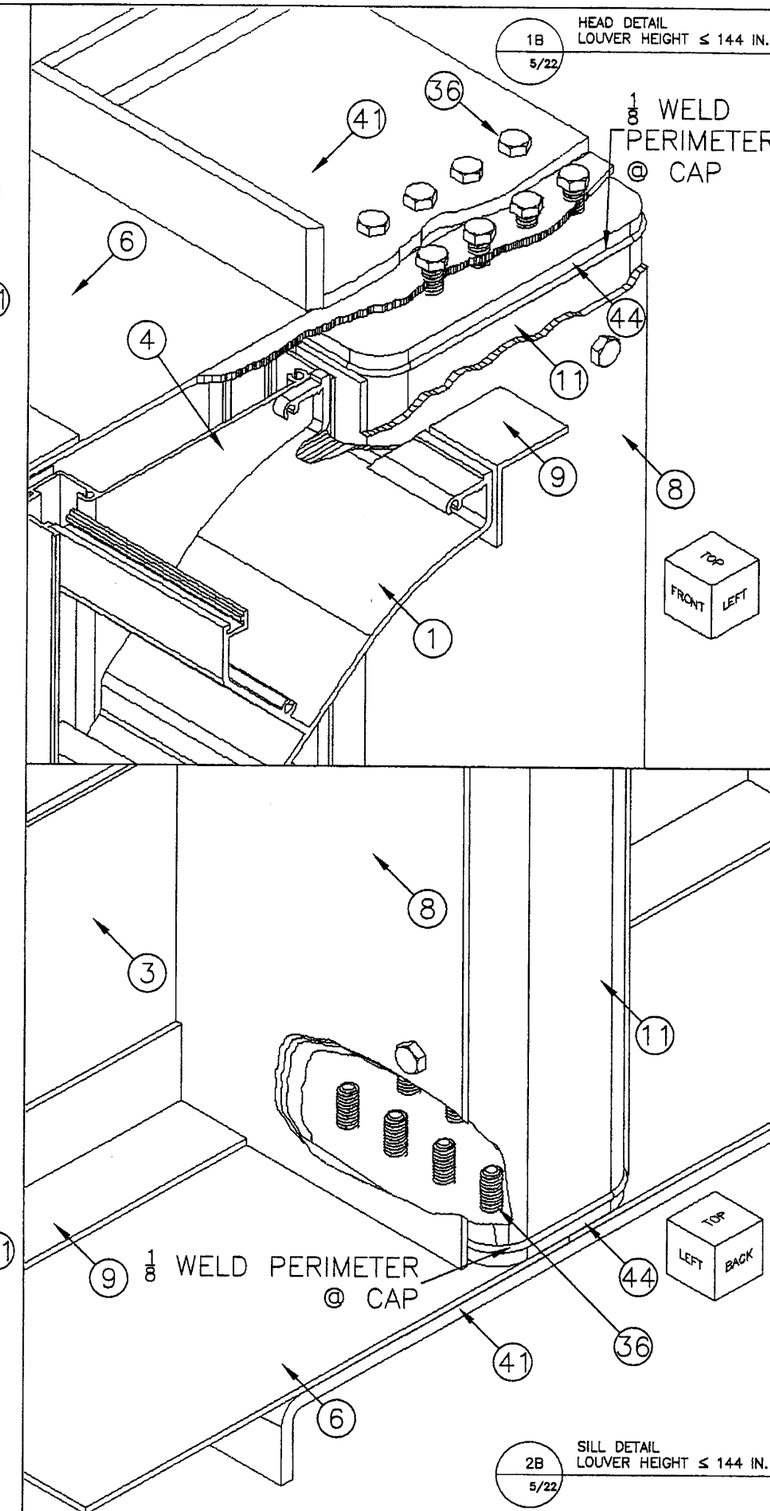

DRAWN BY MES	DATE 8/25/2010
SCALE 1/2	
SHEET NO. 5 OF 22	
CAD DRAWING NO. K6746MD	

AIROLITE
The look that works.™
SCHOFIELD, WISCONSIN 54476
715-359-6171

TITLE
K6746MD LOUVER
FLANGE FRAME
SLEEVE MOUNT
HEAD & SILL DETAILS, H≤144"

RICE ENGINEERING
105 School Creek Trail
Luxemburg, WI 54217
Phone: 920.845.1042
Fax: 920.845.1048
www.rice-inc.com

Florida Firm No: F-01000005061
Certificate of Authorization: #9090
L. David Rice
Registration No: 50923

L. DAVID RICE
LICENSE
No. 50923
STATE OF FLORIDA
PROFESSIONAL ENGINEER

SEP 0 3 2010

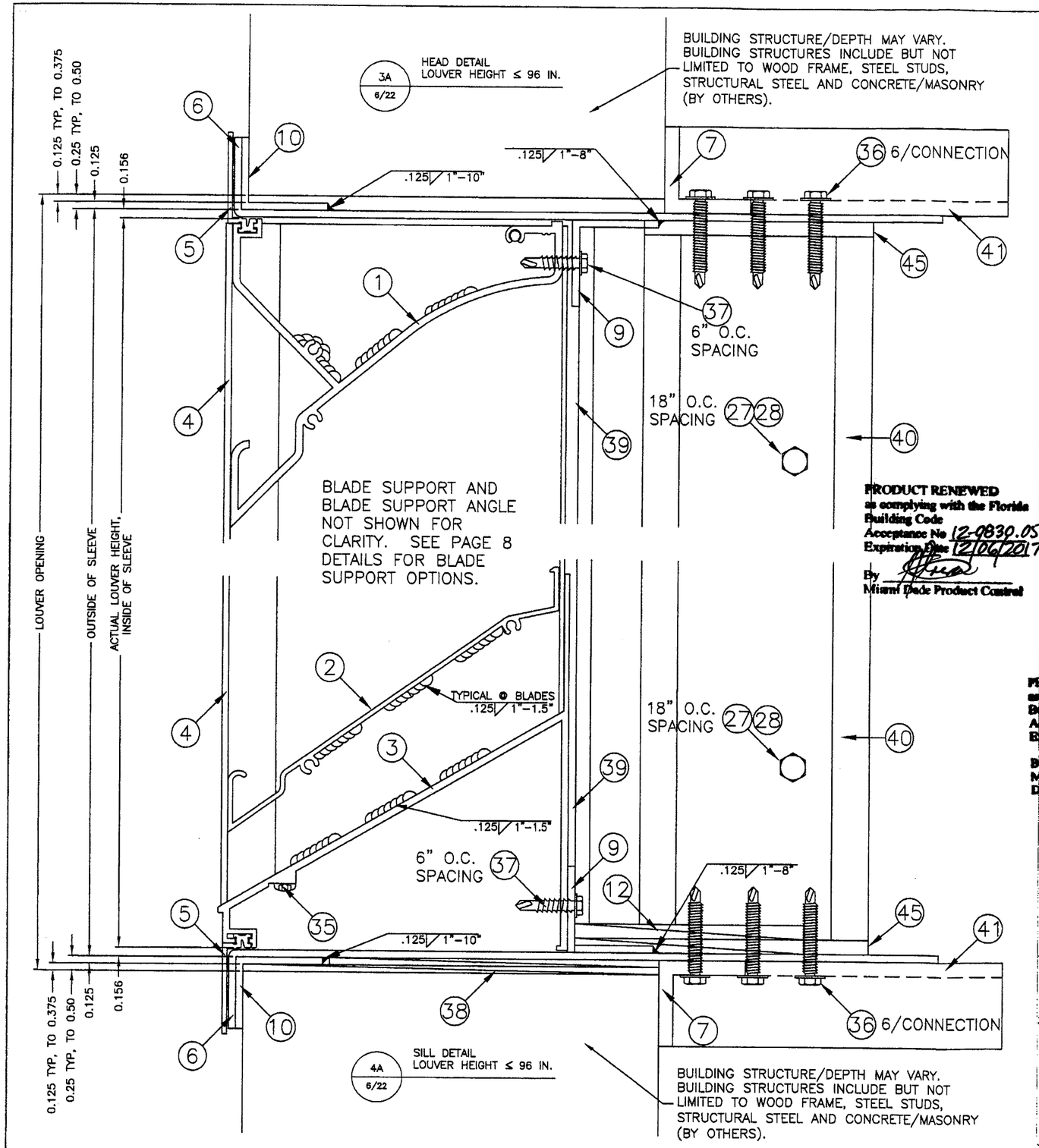

PRODUCT RENEWED
as complying with the Florida Building Code
Acceptance No 12-0830.05
Expiration Date 12/06/2017
By
Miami Dade Product Control

PRODUCT REVISED
as complying with the Florida Building Code
Acceptance No 10-0921.07
Expiration Date 12/06/2012
By
Miami Dade Product Control Division

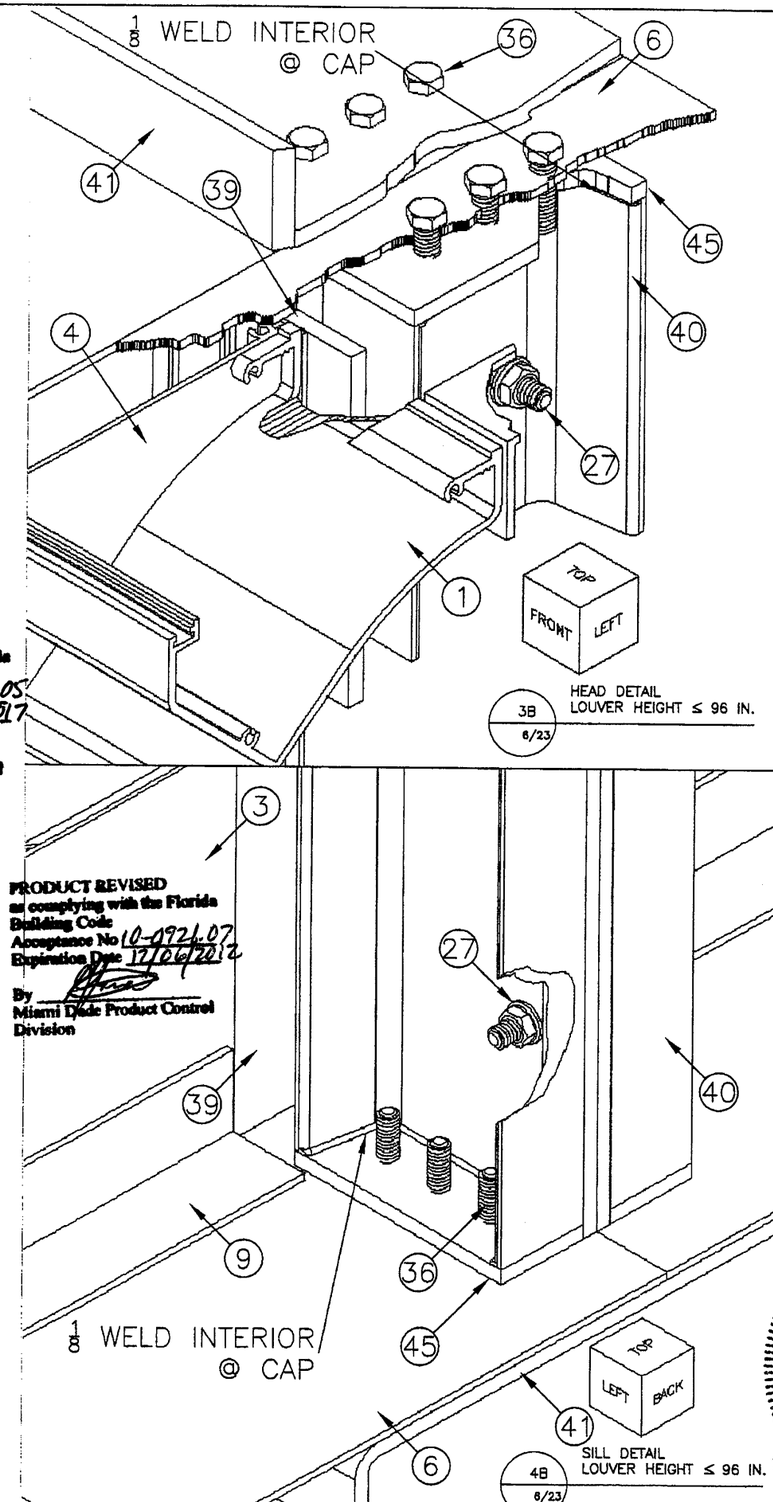

DRAWN BY MES	DATE 8/25/2010
SCALE 1/2	SHEET NO. 6 OF 22
CAD DRAWING NO. K6746MD	

AIROLITE
The look that works.™
SCHOFIELD, WISCONSIN 54476
715-359-6171

TITLE
K6746MD LOUVER
FLANGE FRAME
SLEEVE MOUNT
HEAD & SILL DETAILS, H≤96"

RICE ENGINEERING
105 School Creek Trail
Luxemburg, WI 54217
Phone: 920.845.1042
Fax: 920.845.1048
www.rice-inc.com

Florida Firm No: F-01000005061
Certificate of Authorization: #9090
L. David Rice
Registration No: 50923

L. DAVID RICE
LICENSE
No. 50923
STATE OF FLORIDA
PROFESSIONAL ENGINEER

SEP 03 2010

MULLION DIRECT MOUNT (SHOWN HERE AT HEAD) IS FOR SUBSTRATES WHERE MINIMUM FASTENER EDGE DISTANCE **CAN** BE ACHIEVED BY USE OF HOLES IN THE MULLION END CAP. DETAIL IS TYPICAL FOR BOTH HEAD AND SILL CONDITIONS WHEN APPLICABLE.

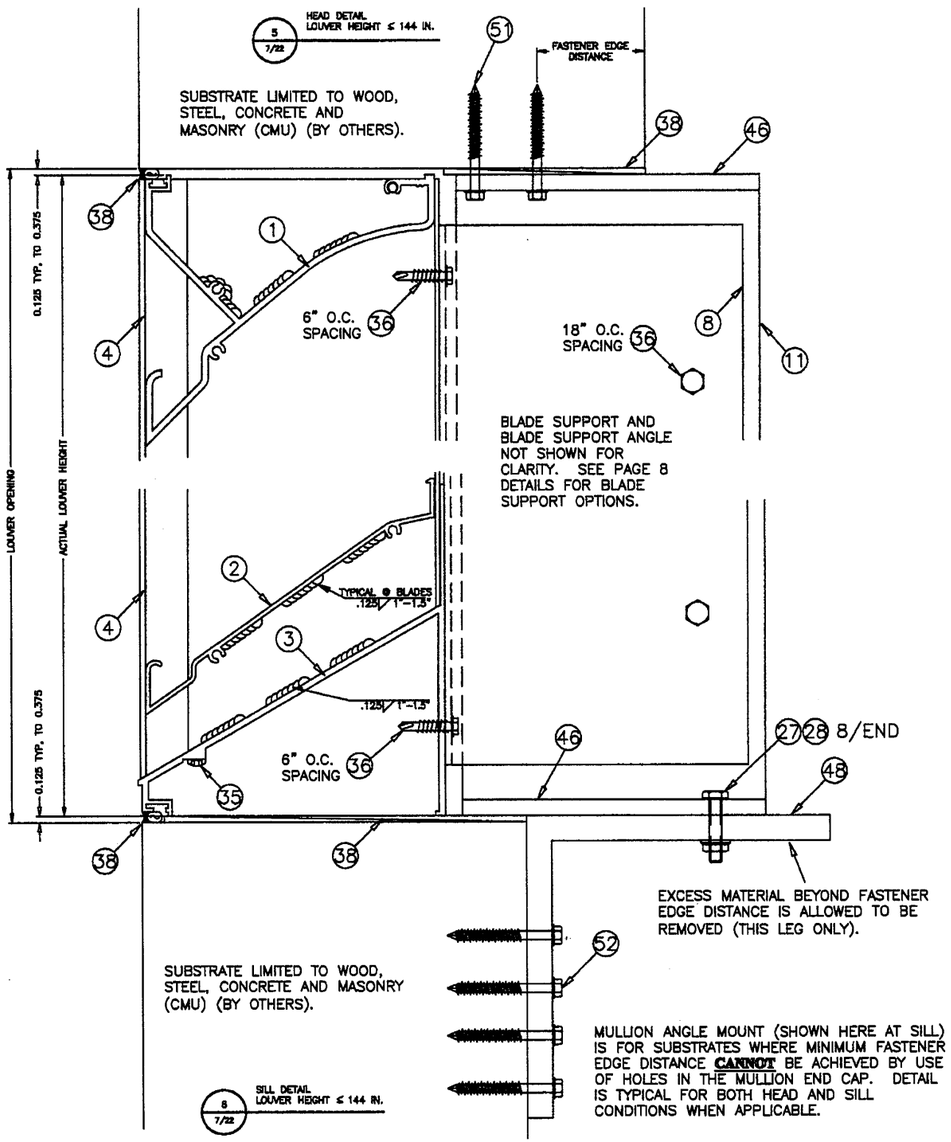

MULLION DIRECT MOUNT (SHOWN HERE AT HEAD) IS FOR SUBSTRATES WHERE MINIMUM FASTENER EDGE DISTANCE **CAN** BE ACHIEVED BY USE OF HOLES IN THE MULLION END CAP. DETAIL IS TYPICAL FOR BOTH HEAD AND SILL CONDITIONS WHEN APPLICABLE.

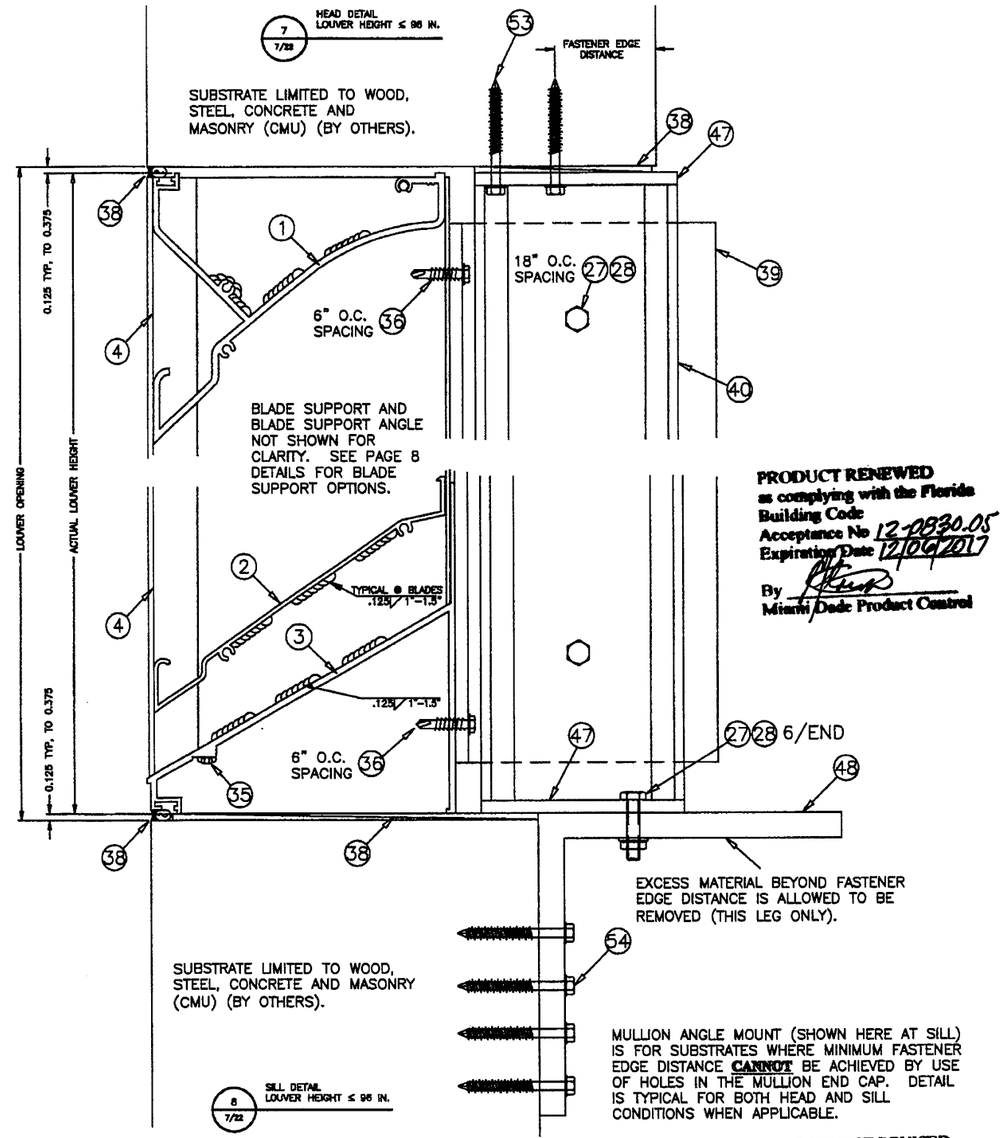

PRODUCT RENEWED
as complying with the Florida Building Code
Acceptance No 12-0830.05
Expiration Date 12/06/2017
By _____
Miami Dade Product Control

PRODUCT REVISED
as complying with the Florida Building Code
Acceptance No 10-0921.07
Expiration Date 12/06/2012
By _____
Miami Dade Product Control Division

DRAWN BY MES	DATE 8/25/2010
SCALE 1/3	
SHEET NO. 7 OF 22	CAD DRAWING NO. K6746MD

AIROLITE
The look that works.™
SCHOFIELD, WISCONSIN 54476
715-359-6171

TITLE
K6746MD LOUVER
CONTINUOUS ANGLE MOUNT
HEAD & SILL DETAILS, H≤144",
HEAD & SILL DETAILS, H≤96"

RICE ENGINEERING
105 School Creek Trail
Luxemburg, WI 54217
Phone: 920.845.1042
Fax: 920.845.1048
www.rice-inc.com

Florida Firm No: F-01000005061
Certificate of Authorization: #9090
L. David Rice
Registration No: 50923

L. DAVID RICE
LICENSE No. 50923
STATE OF FLORIDA
PROFESSIONAL ENGINEER

SEP 03 2010

TYPICALLY, ONLY ONE BLADE BRACKET TYPE (ITEMS 13 & 43) IS USED ON THE ASSEMBLY. BOTH STYLES ARE SHOWN HERE TO SHOW DIFFERENCES.

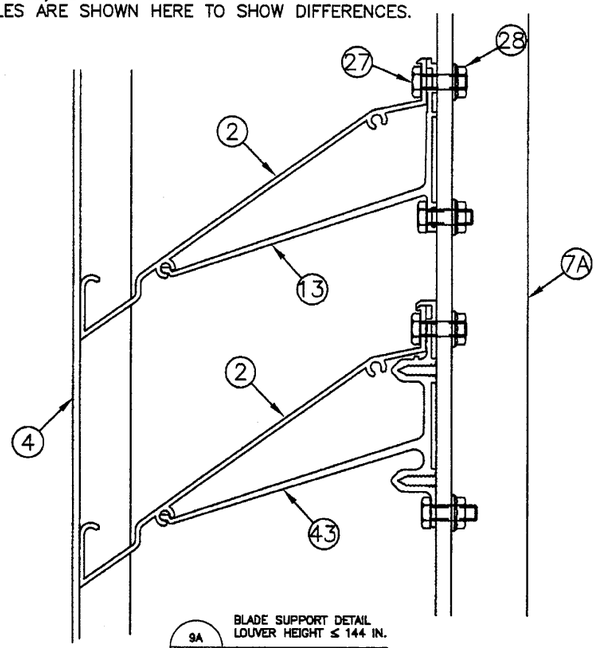

9A 8/22 BLADE SUPPORT DETAIL LOUVER HEIGHT ≤ 144 IN.

TYPICALLY, ONLY ONE BLADE BRACKET TYPE (ITEMS 13 & 43) IS USED ON THE ASSEMBLY. BOTH STYLES ARE SHOWN HERE TO SHOW DIFFERENCES.

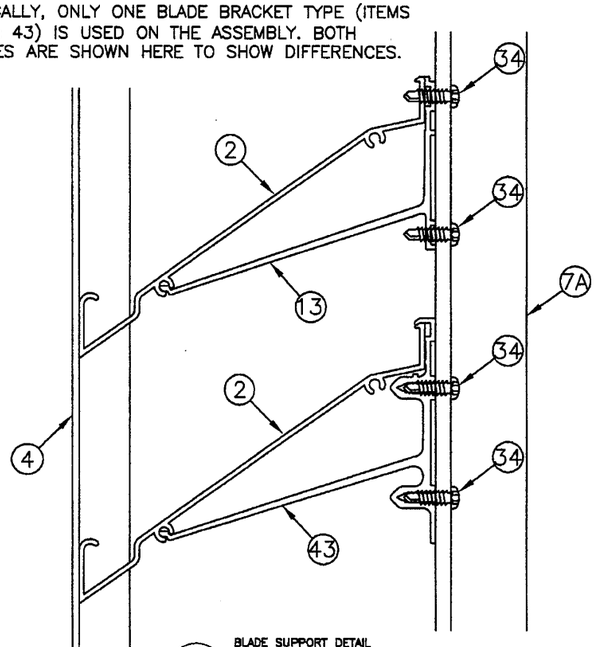

9B 8/22 BLADE SUPPORT DETAIL LOUVER HEIGHT ≤ 96 IN.

BRACKET IS ATTACHED TO SUPPORT ANGLE IN TYPICAL STYLE AS SHOWN IN DETAIL 9.

BLADE/BRACKET IS ATTACHED TO THE BLADE SUPPORT ANGLE

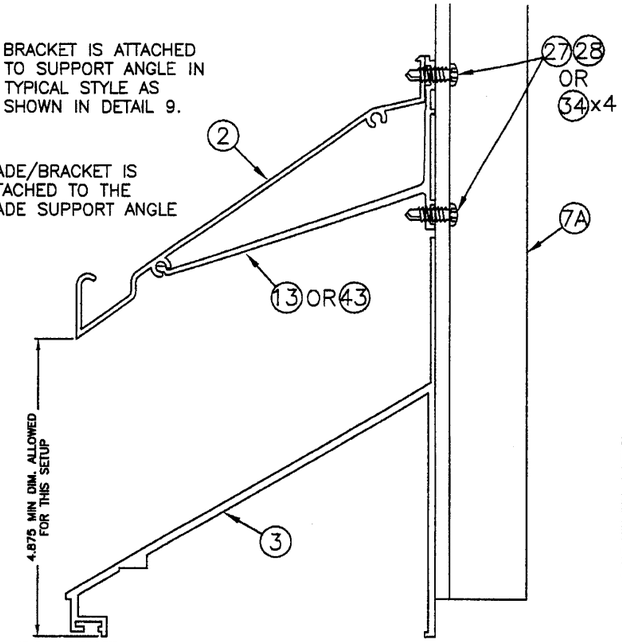

BLADE/BRACKET IS ATTACHED TO THE BLADE SUPPORT ANGLE

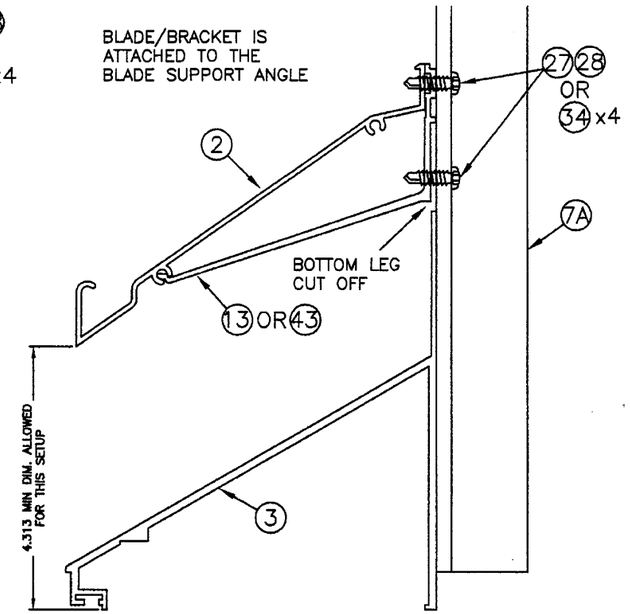

PRODUCT RENEWED
as complying with the Florida Building Code
Acceptance No 12-0830.05
Expiration Date 12/06/2017
By _____
Miami Dade Product Control

NOTE: THE BLADE SUPPORT ANGLE (ITEM 7A) IS NOT SHOWN IN THE BOTTOM THREE DETAILS IN ORDER TO IMPROVE DETAIL CLARITY. THE BLADE SUPPORT ANGLE IS NOT ATTACHED TO THE BLADE SUPPORT BRACKET (ITEM 13 OR 43) IN THE BOTTOM THREE DETAILS AS THE BRACKET IS ATTACHED TO THE SILL INSTEAD. BLADE SUPPORT BRACKET ITEM 43 CAN REPLACE BLADE SUPPORT BRACKET 13 (SHOWN) IN ANY OF THE DRAWINGS FOR DETAIL 10.

BLADE/BRACKET IS ATTACHED TO THE SILL ONLY.

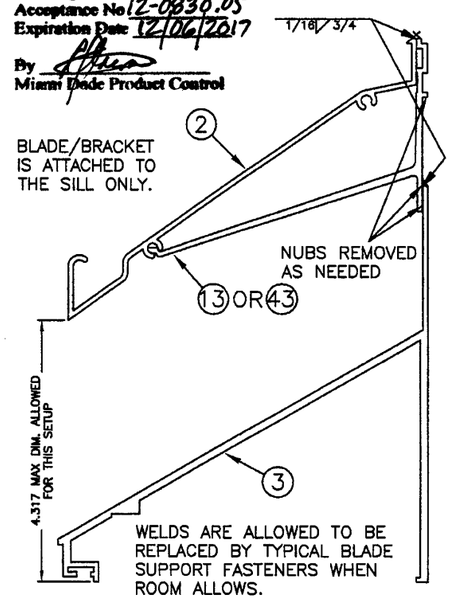

WELDS ARE ALLOWED TO BE REPLACED BY TYPICAL BLADE SUPPORT FASTENERS WHEN ROOM ALLOWS.

BLADE/BRACKET IS ATTACHED TO THE SILL ONLY.

BRACKET CUT SHORT

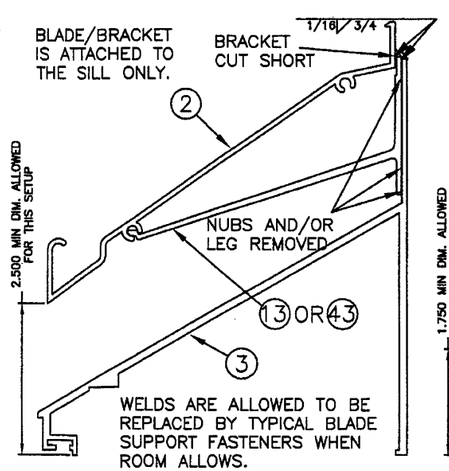

WELDS ARE ALLOWED TO BE REPLACED BY TYPICAL BLADE SUPPORT FASTENERS WHEN ROOM ALLOWS.

10 8/22 BOTTOM BLADE SUPPORT DETAIL LOUVER HEIGHT ≤ 144 IN.

BLADE/BRACKET IS ATTACHED TO THE SILL ONLY.

BRACKET CUT SHORT

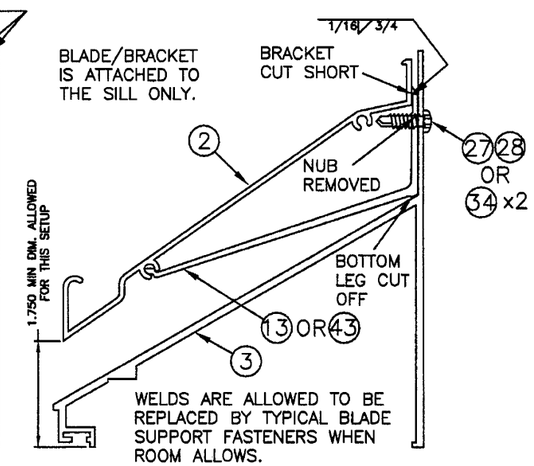

WELDS ARE ALLOWED TO BE REPLACED BY TYPICAL BLADE SUPPORT FASTENERS WHEN ROOM ALLOWS.

PRODUCT REVISED
as complying with the Florida Building Code
Acceptance No 10-0921.07
Expiration Date 12/06/2012
By _____
Miami Dade Product Control Division

DATE	8/25/2010
DRAWN BY	MES
SCALE	1/2.5
SHEET NO.	8 OF 22
CAD DRAWING NO.	K6746MD

AIROLITE
The look that works.™
SCHOFIELD, WISCONSIN 54476
715-359-6171

TITLE K6746MD LOUVER

BLADE SUPPORT DETAILS

RICE ENGINEERING
105 School Creek Trail
Luxemburg, WI 54217
Phone: 920.845.1042
Fax: 920.845.1048
www.rice-inc.com

Florida Firm No: F-01000005061
Certificate of Authorization: #9090
L. David Rice
Registration No: 50923

L. DAVID RICE LICENSED No. 50923 STATE OF FLORIDA PROFESSIONAL ENGINEER

SEP 0 3 2010

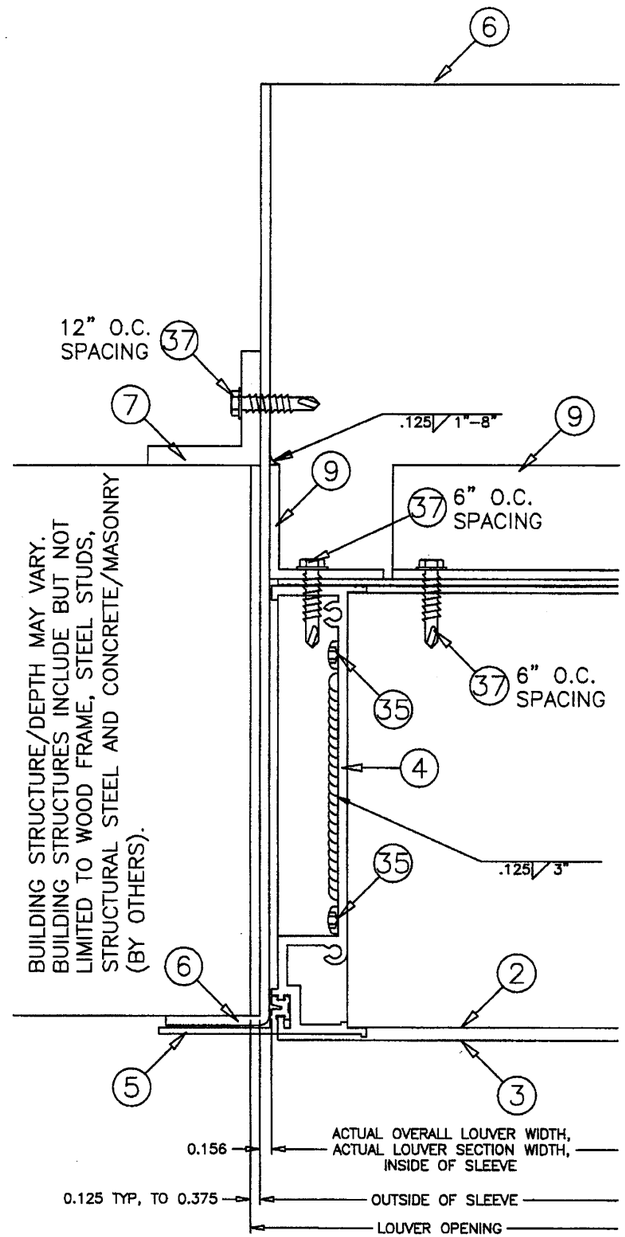

BUILDING STRUCTURE/DEPTH MAY VARY.
BUILDING STRUCTURES INCLUDE BUT NOT
LIMITED TO WOOD FRAME, STEEL STUDS,
STRUCTURAL STEEL AND CONCRETE/MASONRY
(BY OTHERS).

11 / 9/22 JAMB DETAIL

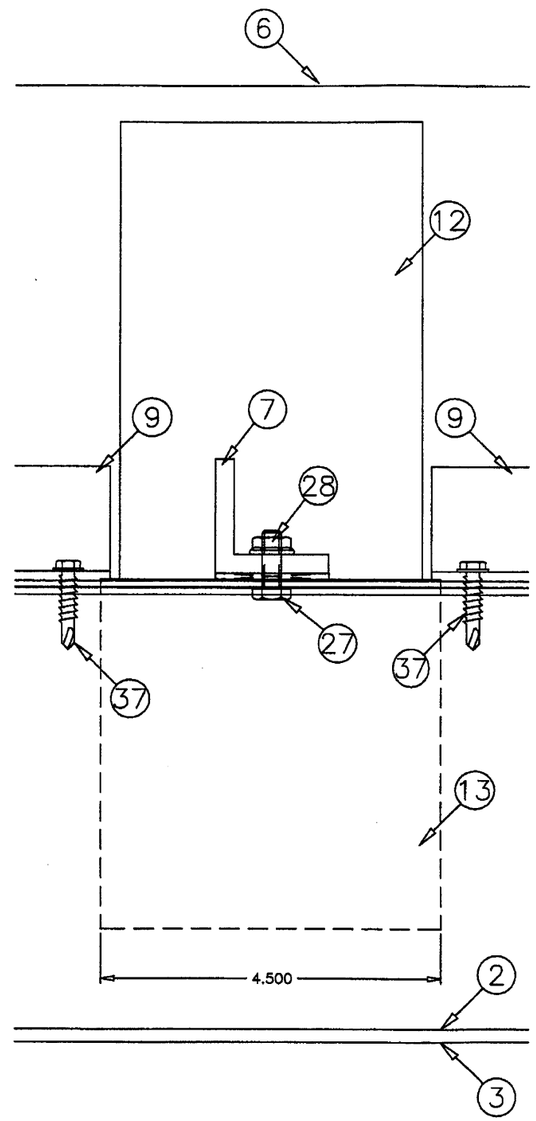

12A / 9/22 SUPPORT DETAIL
LOUVER HEIGHT ≤ 144 IN.

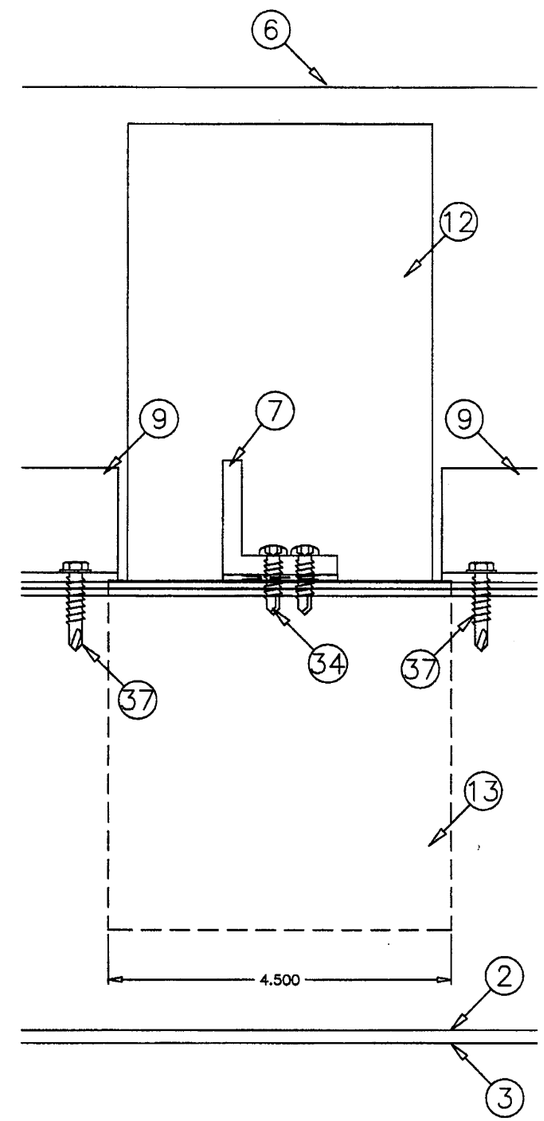

12B / 9/22 SUPPORT DETAIL
LOUVER HEIGHT ≤ 96 IN.

PRODUCT RENEWED
as complying with the Florida Building Code
Acceptance No 12-0830.05
Expiration Date 12/06/2017
By
Miami Dade Product Control

PRODUCT REVISED
as complying with the Florida Building Code
Acceptance No 10-0921.07
Expiration Date 12/06/2017
By
Miami Dade Product Control Division

DATE 8/25/2010
DRAWN BY MES
SCALE 1/2
SHEET NO. 9 OF 22
CAD DRAWING NO. K6746MD

AIROLITE
The look that works.™
SCHOFIELD, WISCONSIN 54476
715-359-6171

TITLE
K6746MD LOUVER
FLANGE FRAME
SLEEVE MOUNT
JAMB DETAILS

RICE ENGINEERING
105 School Creek Trail
Luxemburg, WI 54217
Phone: 920.845.1042
Fax: 920.845.1048
www.rice-inc.com

Florida Firm No: F-01000005061
Certificate of Authorization: #9090
L. David Rice
Registration No: 50923

L. DAVID RICE
LICENSED
No. 50923
STATE OF FLORIDA
PROFESSIONAL ENGINEER

SEP 03 2010

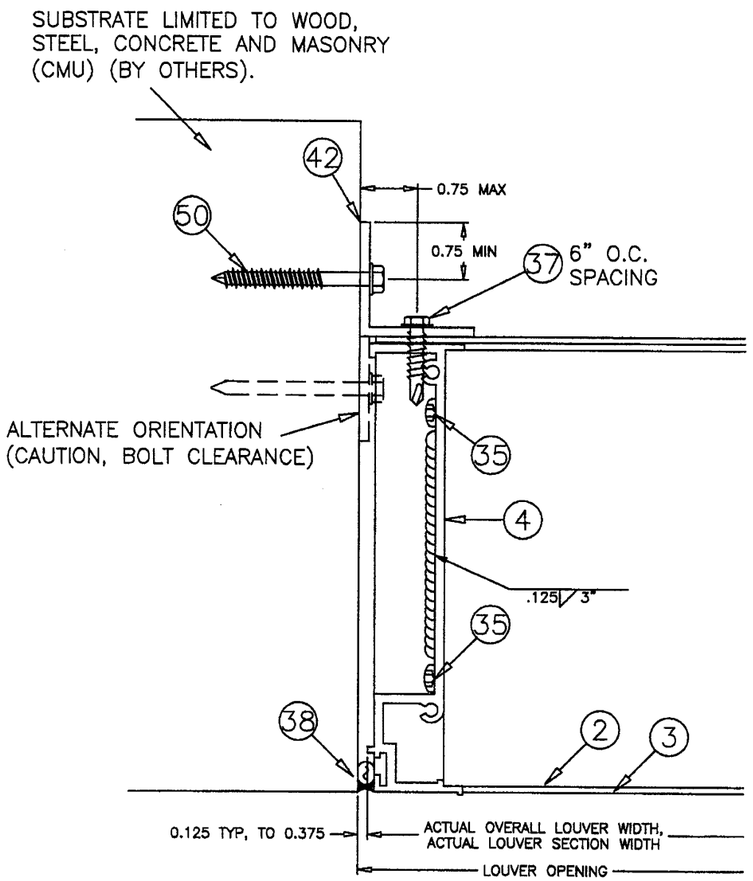

13
10/22
JAMB DETAIL
LOUVER HEIGHT ≤ 144 IN.

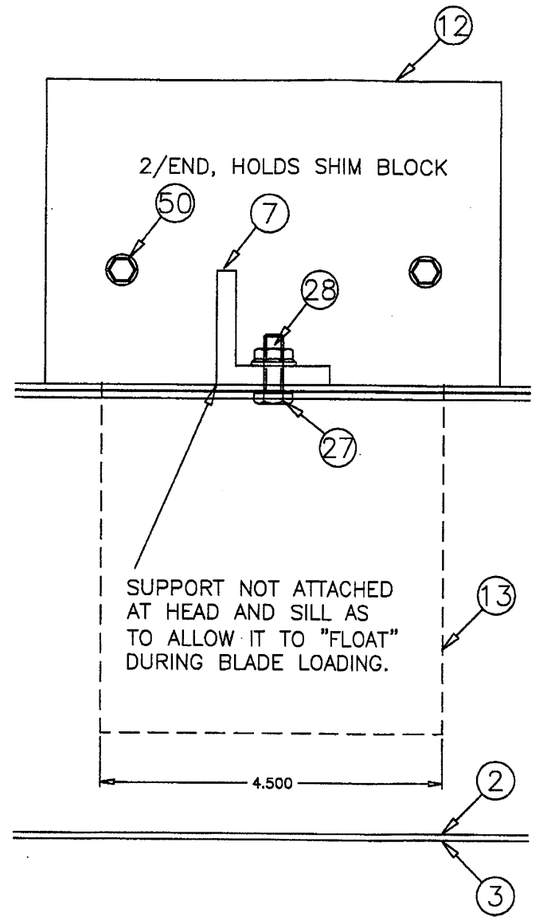

14A
10/22
SUPPORT DETAIL
LOUVER HEIGHT ≤ 144 IN.

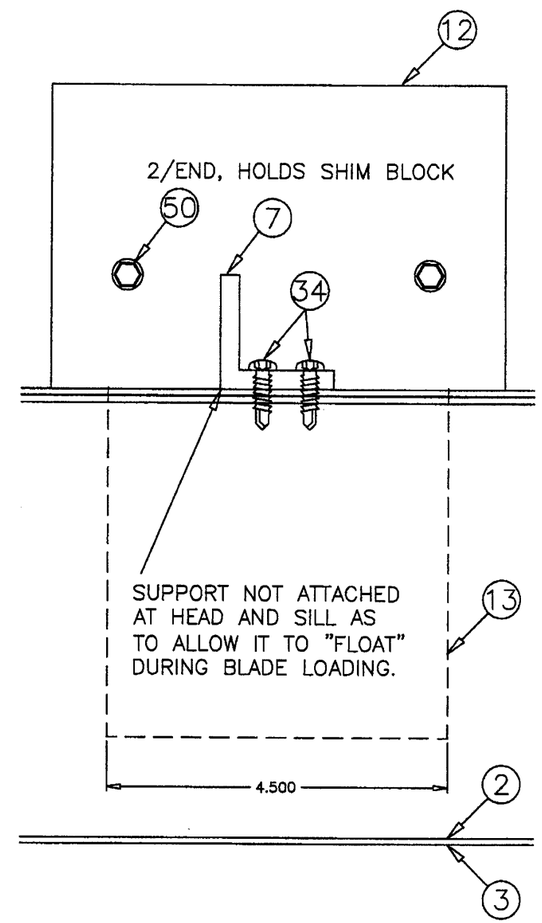

14B
10/22
SUPPORT DETAIL
LOUVER HEIGHT ≤ 96 IN.

PRODUCT RENEWED
as complying with the Florida Building Code
Acceptance No 12-0830.05
Expiration Date 12/06/2017
By
Miami Dade Product Control

PRODUCT REVISED
as complying with the Florida Building Code
Acceptance No 10-0921.07
Expiration Date 12/06/2012
By
Miami Dade Product Control Division

DRAWN BY MES
DATE 8/25/2010
SCALE 1/2
SHEET NO. 10 OF 22
CAD DRAWING NO. K6746MD

AIROLITE
The look that works™
SCHOFIELD, WISCONSIN 54476
715-359-6171

TITLE
K6746MD LOUVER
CONTINUOUS ANGLE MOUNT
JAMB DETAILS

RICE ENGINEERING
105 School Creek Trail
Luxemburg, WI 54217
Phone: 920.845.1042
Fax: 920.845.1048
www.rice-inc.com

Florida Firm No: F-01000005061
Certificate of Authorization: #9090
L. David Rice
Registration No: 50923

L. DAVID RICE
LICENSE
No. 50923
STATE OF FLORIDA
PROFESSIONAL ENGINEER

SEP 03 2010

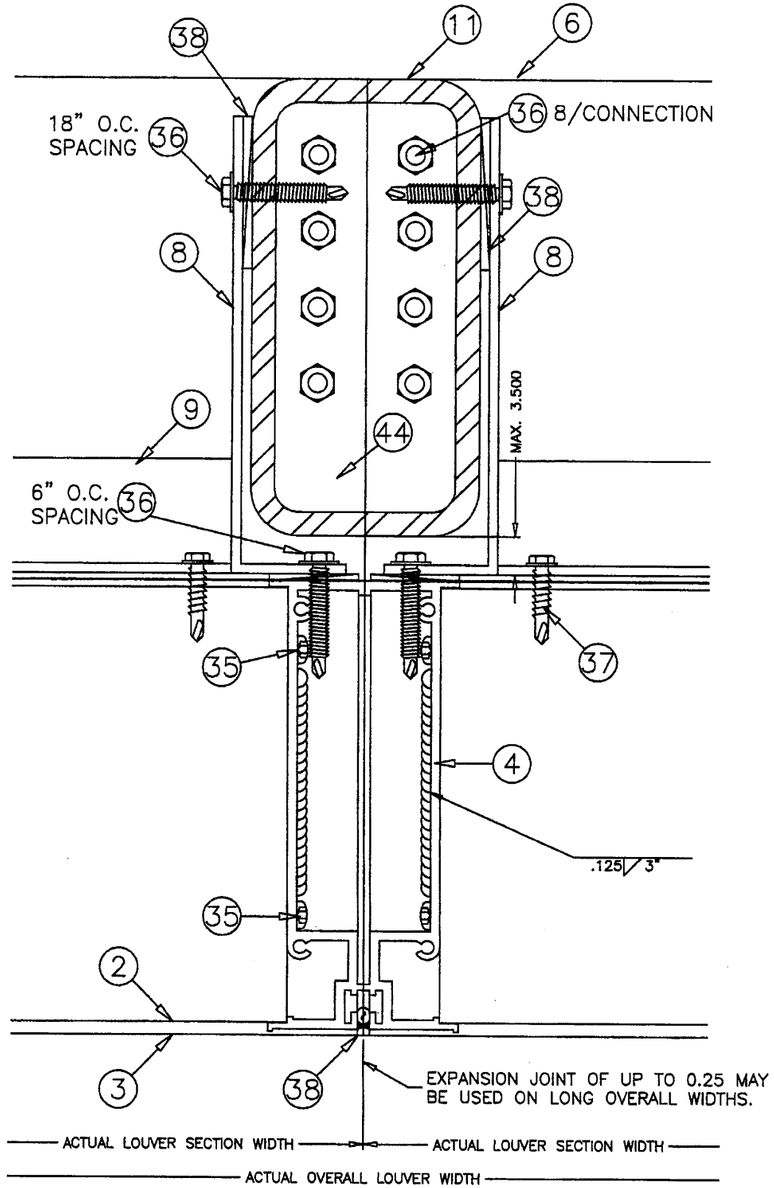

15A
11/22

MULLION DETAIL
LOUVER HEIGHT ≤ 144 IN.

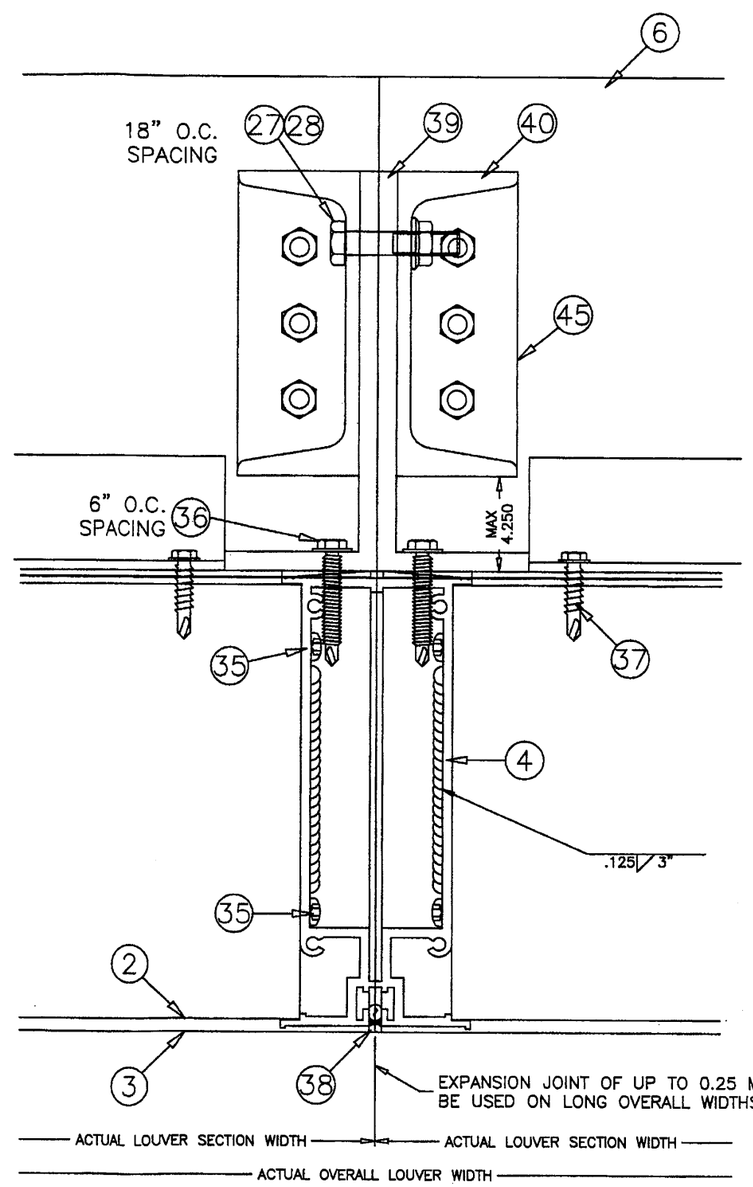

15B
11/22

MULLION DETAIL
LOUVER HEIGHT ≤ 96 IN.

PRODUCT RENEWED
as complying with the Florida Building Code
Acceptance No 12-0830.05
Expiration Date 12/06/2017
By
Miami Dade Product Control

PRODUCT REVISED
as complying with the Florida Building Code
Acceptance No 10-0721.07
Expiration Date 12/06/2012
By
Miami Dade Product Control Division

DRAWN BY MES	DATE 8/25/2010
SCALE 1/2	
SHEET NO. 11 OF 22	
CAD DRAWING NO. K6746MD	

AIROLITE
The look that works™
SCHOFIELD, WISCONSIN 54476
715-359-6171

TITLE
K6746MD LOUVER
FLANGE FRAME
SLEEVE MOUNT
MULLION DETAILS

RICE ENGINEERING
105 School Creek Trail
Luxemburg, WI 54217
Phone: 920.845.1042
Fax: 920.845.1048
www.rice-inc.com

Florida Firm No: F-01000005061
Certificate of Authorization: #9090
L. David Rice
Registration No: 50923

SEP 0 3 2010

L. DAVID RICE
LICENSE
No. 50923
STATE OF FLORIDA
PROFESSIONAL ENGINEER

MULLION DIRECT MOUNT (SHOWN HERE AT HEAD) IS FOR SUBSTRATES WHERE MINIMUM FASTENER EDGE DISTANCE **CAN** BE ACHIEVED BY USE OF HOLES IN THE MULLION END CAP. DETAIL IS TYPICAL FOR BOTH HEAD AND SILL CONDITIONS WHEN APPLICABLE.

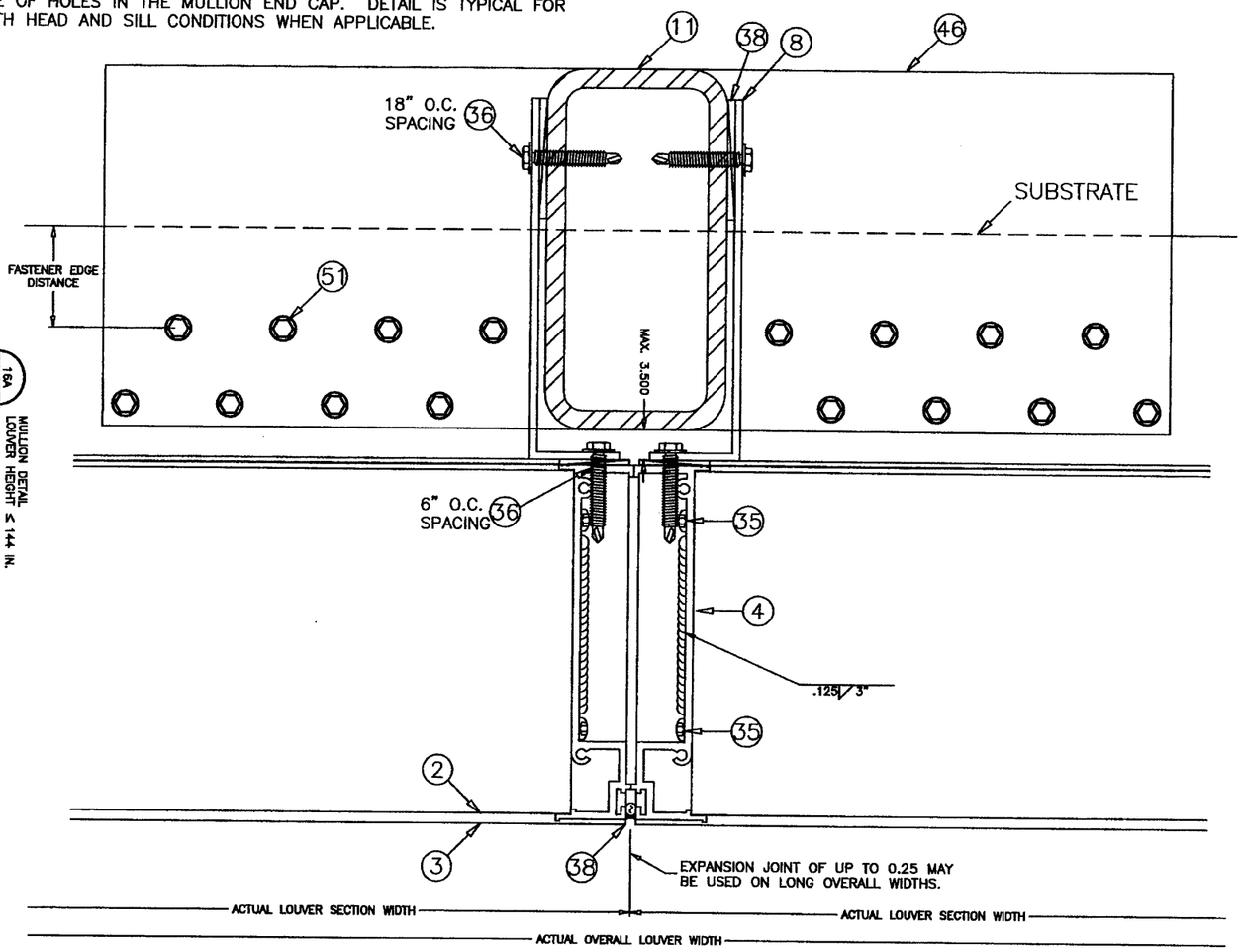

16A 12/22 MULLION DETAIL LOUVER HEIGHT ≤ 144 IN.

MULLION ANGLE MOUNT (SHOWN HERE AT SILL) IS FOR SUBSTRATES WHERE MINIMUM FASTENER EDGE DISTANCE **CANNOT** BE ACHIEVED BY USE OF HOLES IN THE MULLION END CAP. DETAIL IS TYPICAL FOR BOTH HEAD AND SILL CONDITIONS WHEN APPLICABLE.

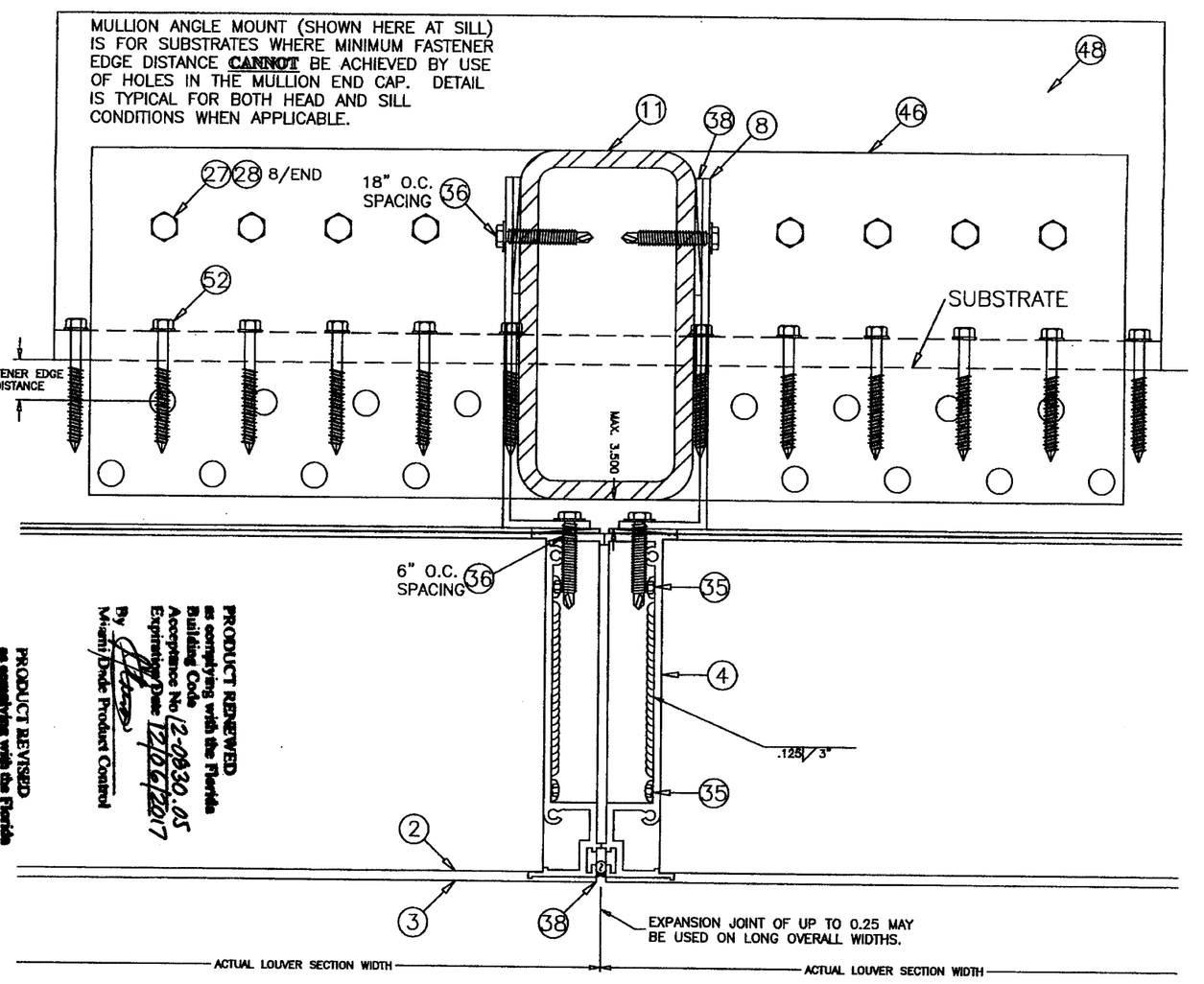

16B 12/22 MULLION DETAIL LOUVER HEIGHT ≤ 144 IN.

PRODUCT REVISED as complying with the Florida Building Code Acceptance No. 10-0721.07 Expiration Date 12/06/2012 By Miami/Dade Product Control Division

PRODUCT RENEWED as complying with the Florida Building Code Acceptance No. 12-0830.05 Expiration Date 12/06/2017 By Miami/Dade Product Control

STATE OF FLORIDA PROFESSIONAL ENGINEER L. DAVID RICE No. 50923 LICENSED SEP 13 2010

RICE ENGINEERING
105 School Creek Trail
Luxemburg, WI 54217
Phone: 920.845.1042
Fax: 920.845.1048
www.rice-inc.com

Florida Firm No: F-01000005061
Certificate of Authorization: #9090
L. David Rice
Registration No: 50923

AIROLITE
The look that works.™
SCHOFIELD, WISCONSIN 54476
715-359-6171

TITLE
K6746MD LOUVER
CONTINUOUS ANGLE MOUNT
MULLION DETAILS, H≤144"

DRAWN BY MES	DATE 8/25/2010
SCALE 1/2.5	
SHEET NO. 12 OF 22	
CAD DRAWING NO. K6746MD	

MULLION DIRECT MOUNT (SHOWN HERE AT HEAD) IS FOR SUBSTRATES WHERE MINIMUM FASTENER EDGE DISTANCE **CAN** BE ACHIEVED BY USE OF HOLES IN THE MULLION END CAP. DETAIL IS TYPICAL FOR BOTH HEAD AND SILL CONDITIONS WHEN APPLICABLE.

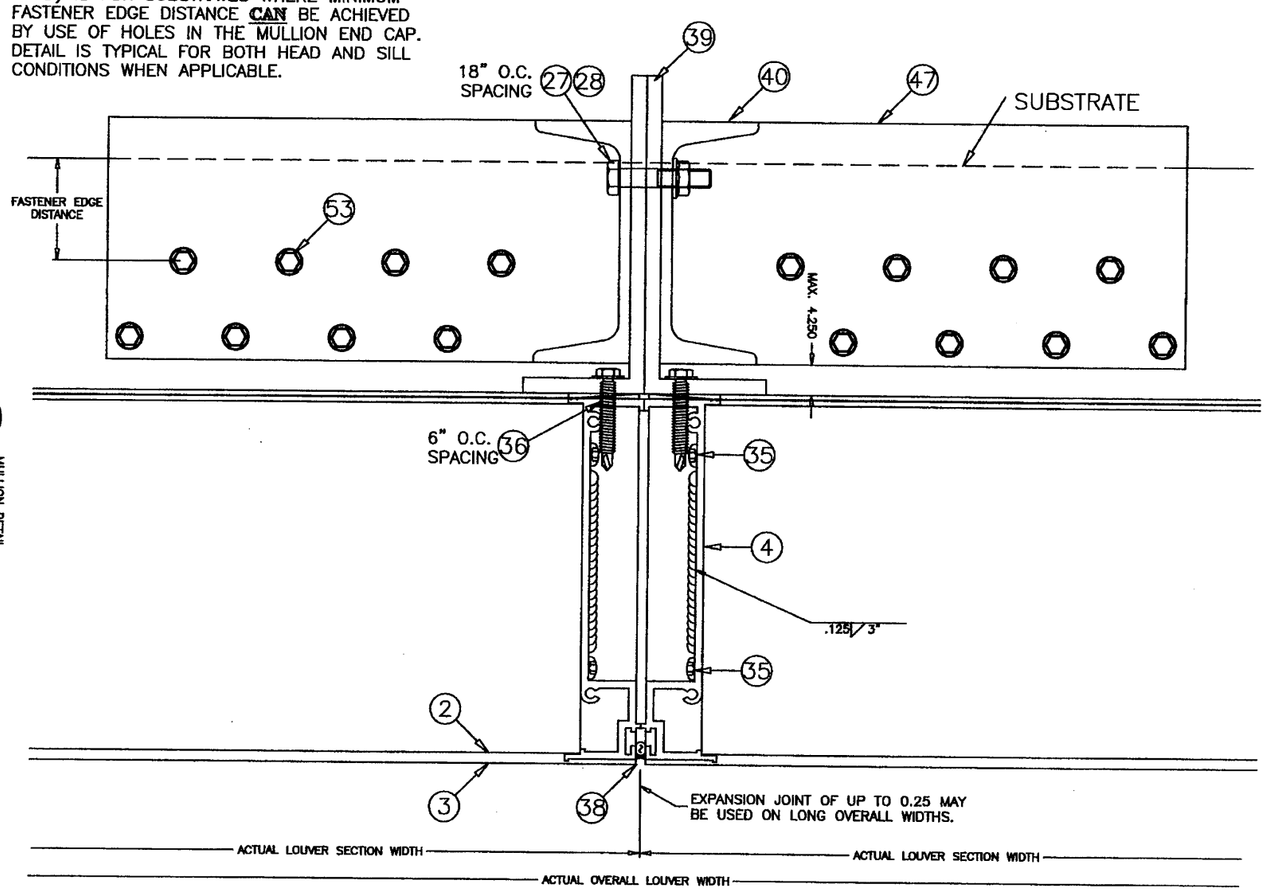

17A 13/22 MULLION DETAIL LOUVER HEIGHT ≤ 96 IN.

MULLION ANGLE MOUNT (SHOWN HERE AT SILL) IS FOR SUBSTRATES WHERE MINIMUM FASTENER EDGE DISTANCE **CANNOT** BE ACHIEVED BY USE OF HOLES IN THE MULLION END CAP. DETAIL IS TYPICAL FOR BOTH HEAD AND SILL CONDITIONS WHEN APPLICABLE.

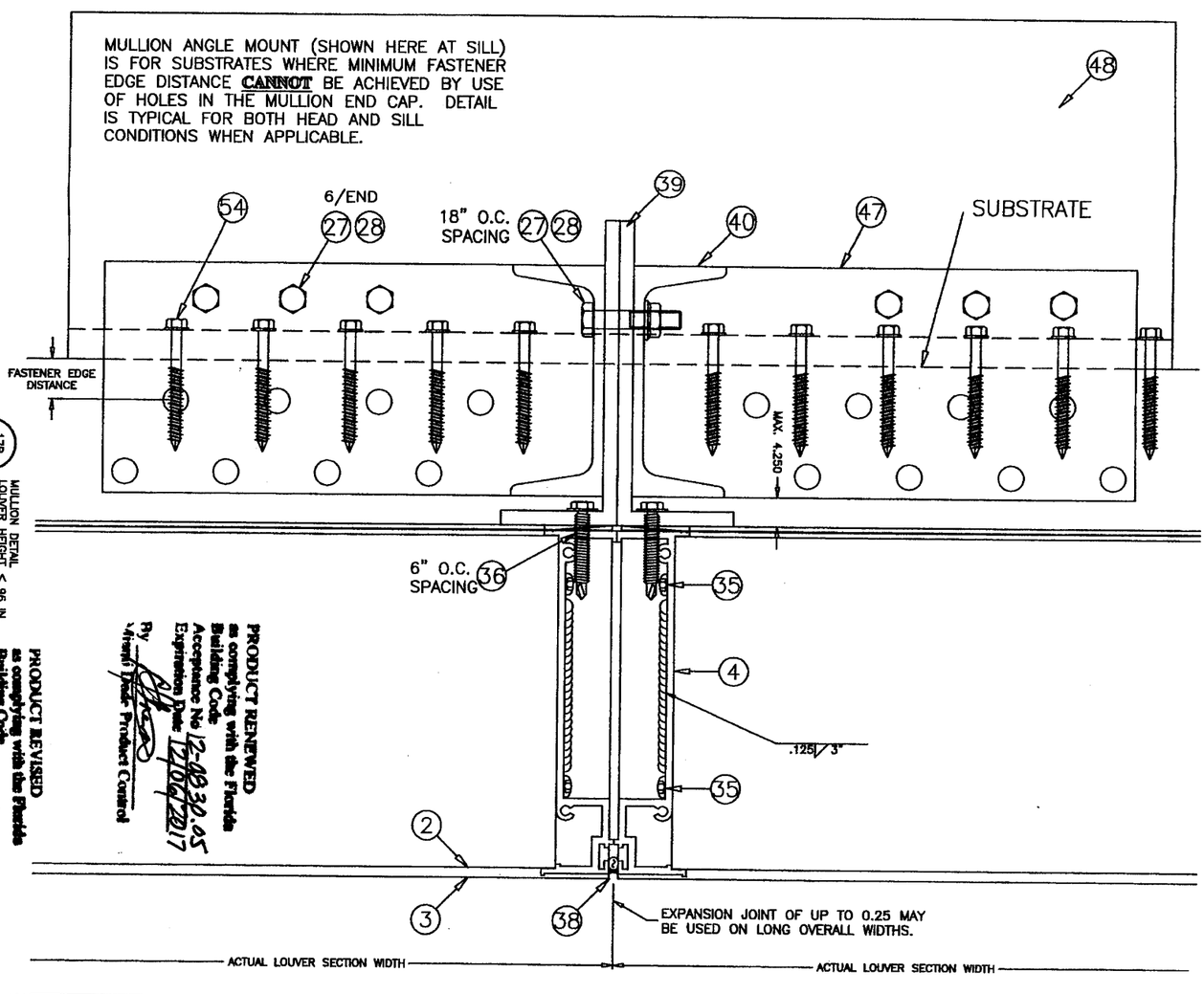

17B 13/22 MULLION DETAIL LOUVER HEIGHT ≤ 96 IN.

PRODUCT REVISED as complying with the Florida Building Code Acceptance No. 12-0824.07 Expiration Date 12/06/2012 By Miami-Dade Product Control Division

PRODUCT RENEWED as complying with the Florida Building Code Acceptance No. 12-0830.05 Expiration Date 12/06/2017 By Miami-Dade Product Control

STATE OF FLORIDA L. DAVID RICE No. 50923 PROFESSIONAL ENGINEER

SEP 0 3 2010

RICE ENGINEERING
105 School Creek Trail
Luxemburg, WI 54217
Phone: 920.845.1042
Fax: 920.845.1048
www.rice-inc.com

Florida Firm No: F-01000005061
Certificate of Authorization: #9090
L. David Rice
Registration No: 50923

AIROLITE
The look that works.™
SCHOFIELD, WISCONSIN 54476
715-359-6171

TITLE
K6746MD LOUVER
CONTINUOUS ANGLE MOUNT

MULLION DETAILS, H≤96"

DRAWN BY MES	DATE 8/25/2010
SCALE 1/2.5	
SHEET NO. 13 OF 22	
CAD DRAWING NO. K6746MD	

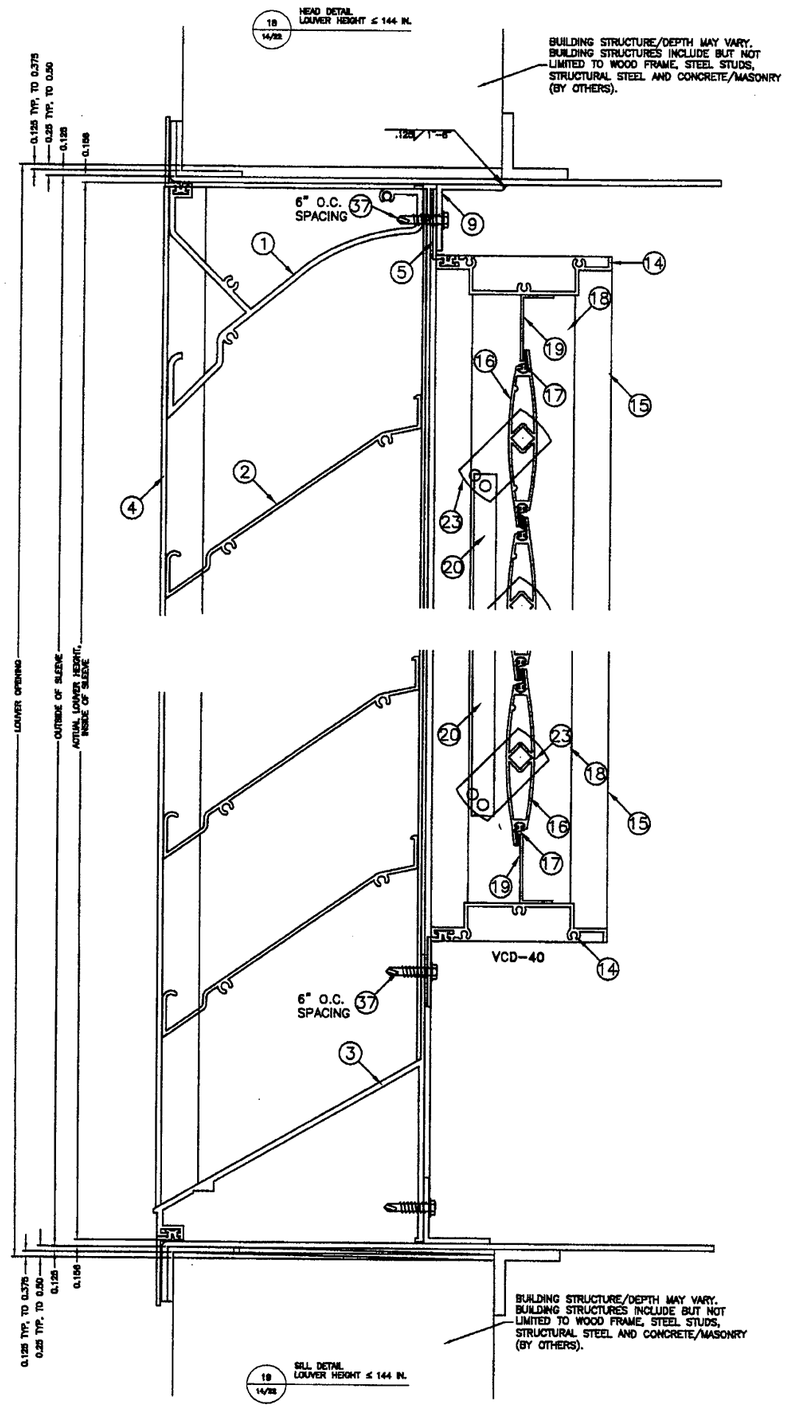

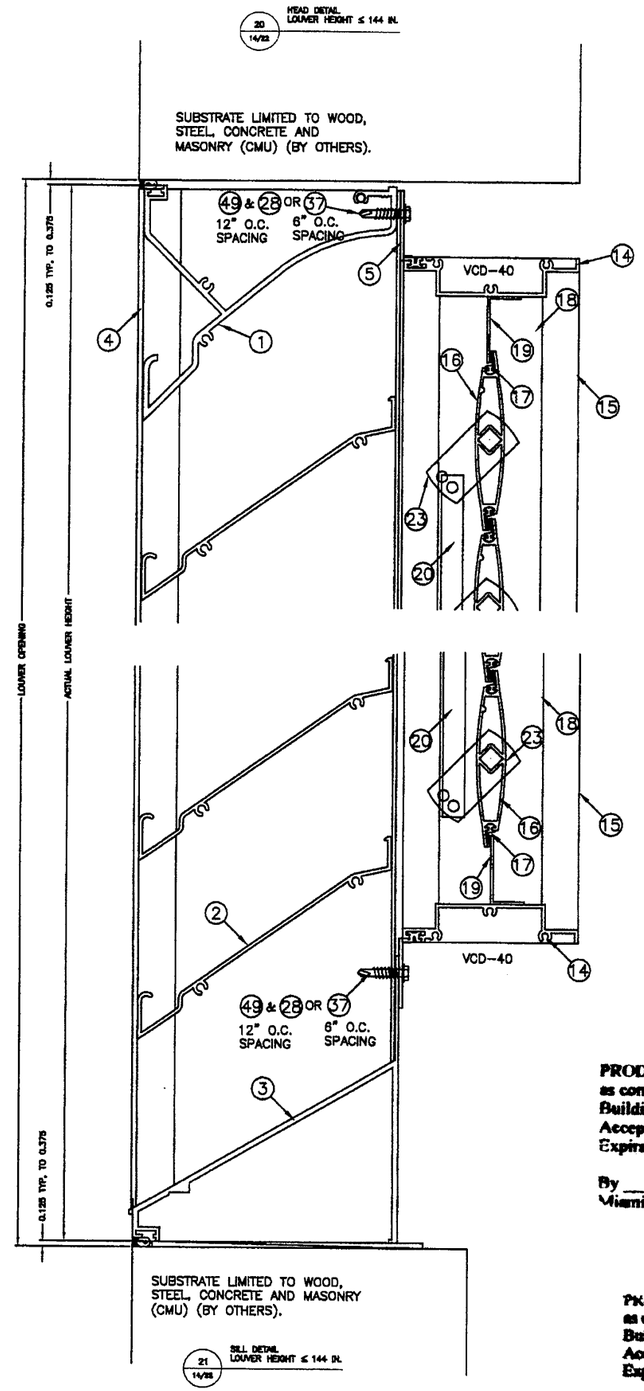

PRODUCT RENEWED
as complying with the Florida Building Code
Acceptance No 12-0830.05
Expiration Date 12/06/2017
By
Miami Dade Product Control

PRODUCT REVISED
as complying with the Florida Building Code
Acceptance No 10-0921.07
Expiration Date 12/06/2017
By
Miami Dade Product Control Division

DRAWN BY MES	DATE 8/25/2010
SCALE 1/3	
SHEET NO. 14 OF 22	
CAD DRAWING NO. K6746MD	

ARROLITE
The look that works.™
SCHOFIELD, WISCONSIN 54476
715-359-6171

TITLE
K6746MD LOUVER W/VCD-40
FLANGE FRAME W/SLEEVE MOUNT,
& CONTINUOUS ANGLE MOUNT
HEAD & SILL DETAILS

RICE ENGINEERING
105 School Creek Trail
Luxemburg, WI 54217
Phone: 920.845.1042
Fax: 920.845.1048
www.rice-inc.com

Florida Firm No: F-01000005061
Certificate of Authorization: #9090
L. David Rice
Registration No: 50923

L. DAVID RICE
LICENSE
No. 50923
STATE OF FLORIDA
PROFESSIONAL ENGINEER

SEP 03 2010

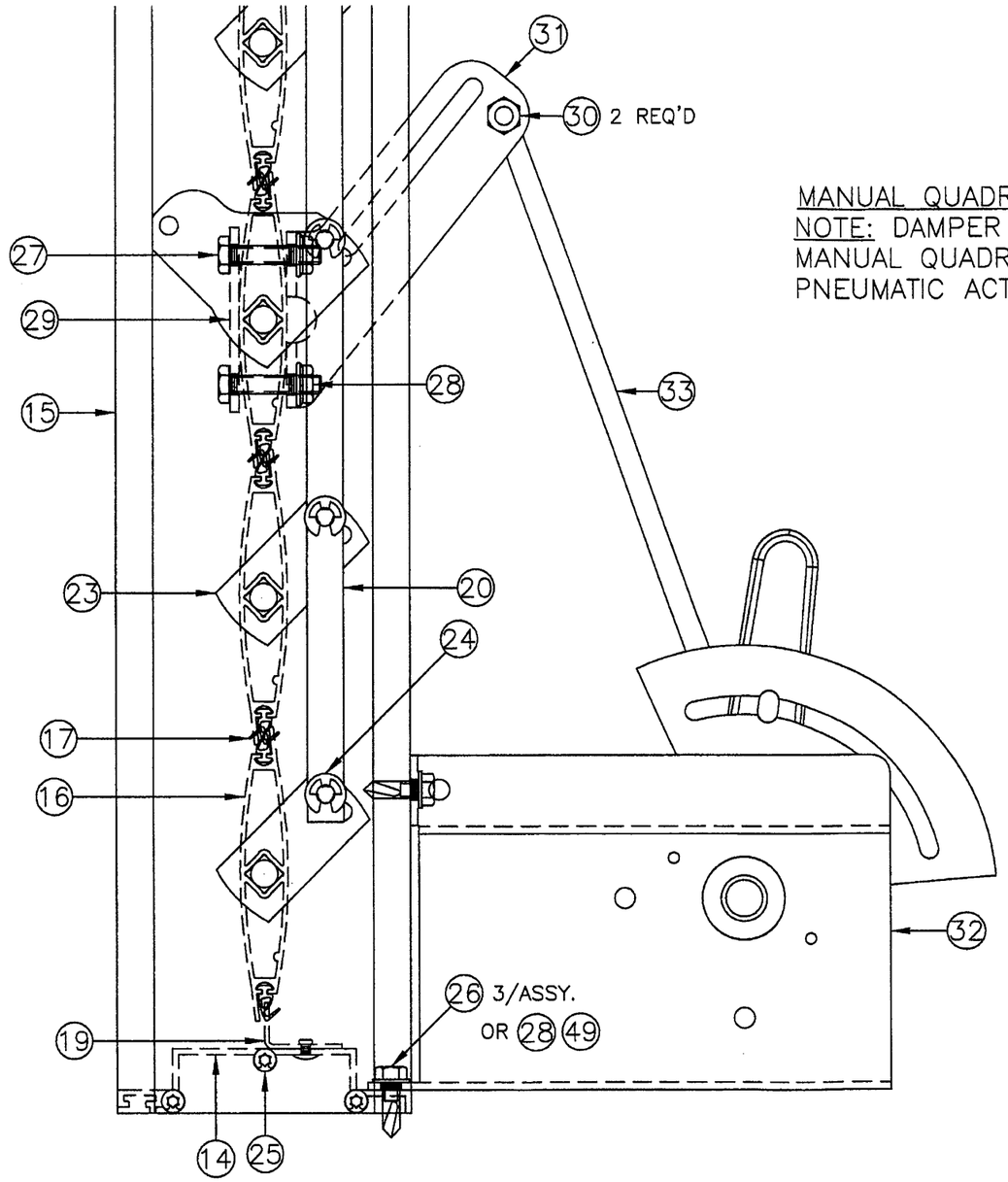

MANUAL QUADRANT ACTUATOR AS SHOWN
NOTE: DAMPER MAY BE OPERATED BY MANUAL QUADRANT, AN ELECTRIC OR PNEUMATIC ACTUATOR.

22
15/22
ACTUATOR DETAIL
LOUVER HEIGHT ≤ 144 IN.

PRODUCT RENEWED
as complying with the Florida Building Code
Acceptance No 12-0830.05
Expiration Date 12/06/2017
By
Miami Dade Product Control

PRODUCT REVISED
as complying with the Florida Building Code
Acceptance No 10-0922.07
Expiration Date 12/06/2012
By
Miami Dade Product Control Division

DRAWN BY MES	DATE 8/25/2010
SCALE 1:2	
SHEET NO. 15 OF 22	
CAD DRAWING NO. K6746MD	

AIROLITE
The look that works.™
SCHOFIELD, WISCONSIN 54476
715-359-6171

TITLE
VCD-40 DAMPER
MANUAL QUAD ACTUATOR

RICE
ENGINEERING
105 School Creek Trail
Luxemburg, WI 54217
Phone: 920.845.1042
Fax: 920.845.1048
www.rice-inc.com

Florida Firm No: F-01000005061
Certificate of Authorization: #9090
L. David Rice
Registration No: 50923

L. DAVID RICE
LICENSE
No. 50923
STATE OF FLORIDA
PROFESSIONAL ENGINEER

SEP 0 3 2010

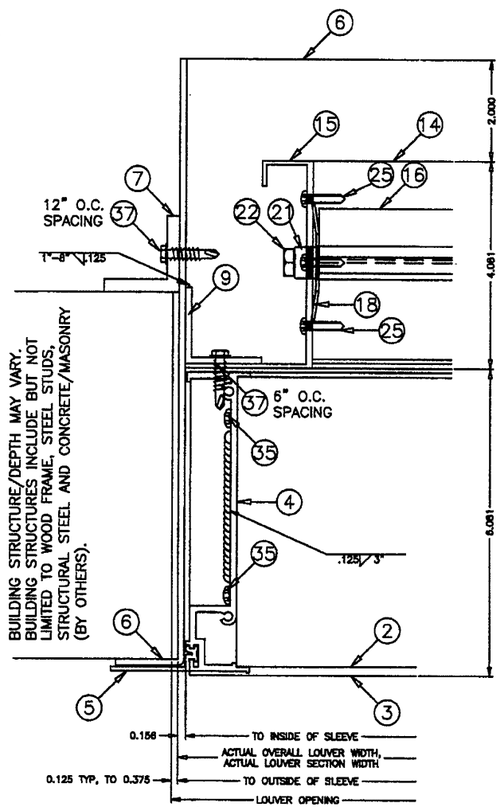

VCD-40

ESD-635D

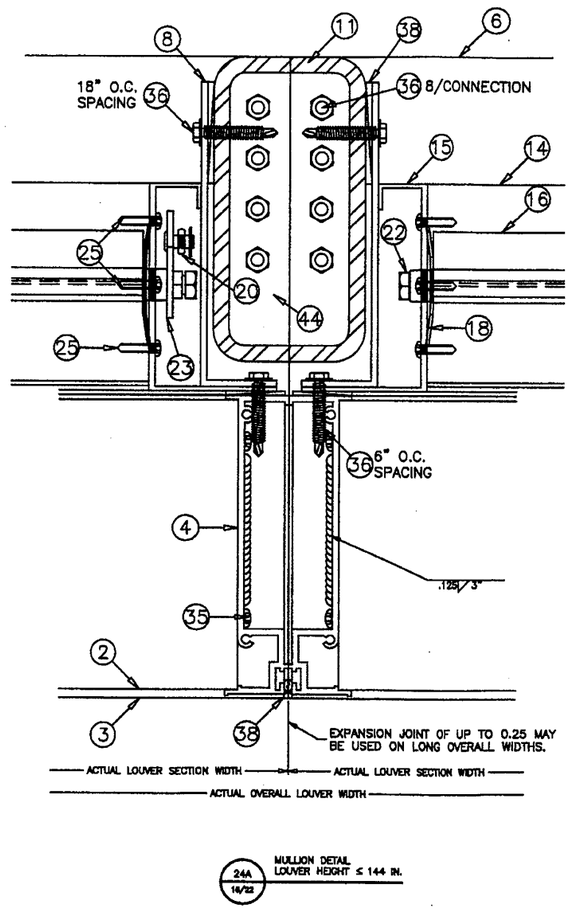

VCD-40

ESD-635D

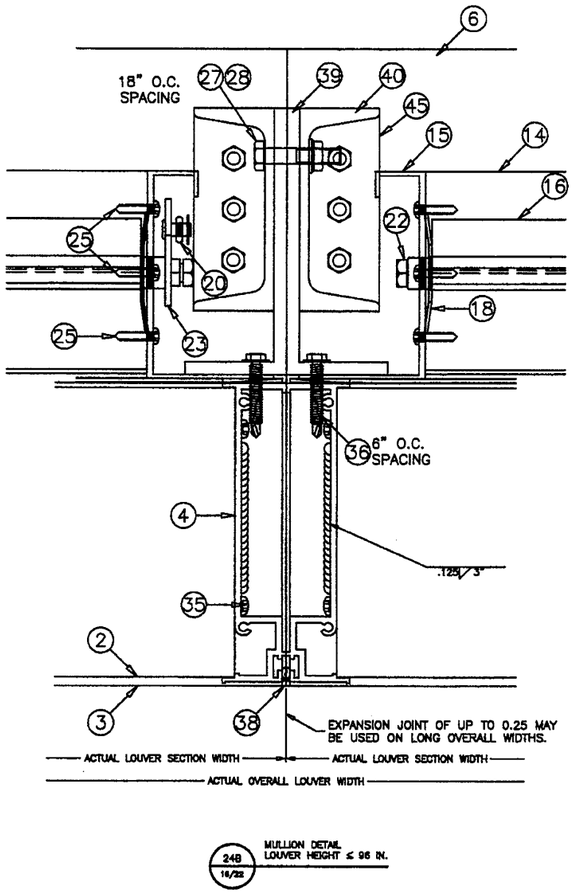

PRODUCT RENEWED
as complying with the Florida Building Code
Acceptance No 12-0830.05
Expiration Date 12/06/2017
By
Miami-Dade Product Control

PRODUCT REVISED
as complying with the Florida Building Code
Acceptance No 10-0921.07
Expiration Date 12/06/2012
By
Miami Dade Product Control Division

DRAWN BY MES	DATE 8/25/2010
SCALE 1/3	
SHEET NO. 16 OF 22	
CAD DRAWING NO. K6746MD	

AIROLITE
The look that works.™
SCHOFIELD, WISCONSIN 54476
715-359-6171

TITLE
K6746MD LOUVER W/VCD-40
FLANGE FRAME
SLEEVE MOUNT
JAMB AND MULLION DETAILS

RICE ENGINEERING
105 School Creek Trail
Luxemburg, WI 54217
Phone: 920.845.1042
Fax: 920.845.1048
www.rice-inc.com

Florida Firm No: F-01000005061
Certificate of Authorization: #9090
L. David Rice
Registration No: 50923

L. DAVID RICE
LICENSE
No. 50923
STATE OF FLORIDA
PROFESSIONAL ENGINEER

SEP 03 2010

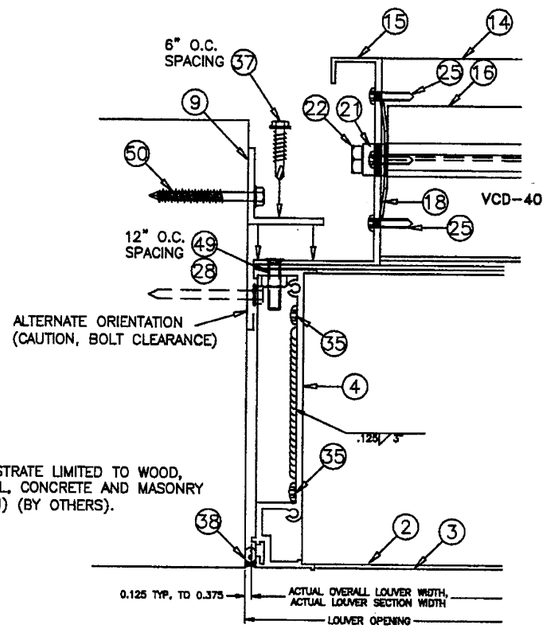

25 / 17/22 JAMB DETAIL LOUVER HEIGHT ≤ 144 IN.

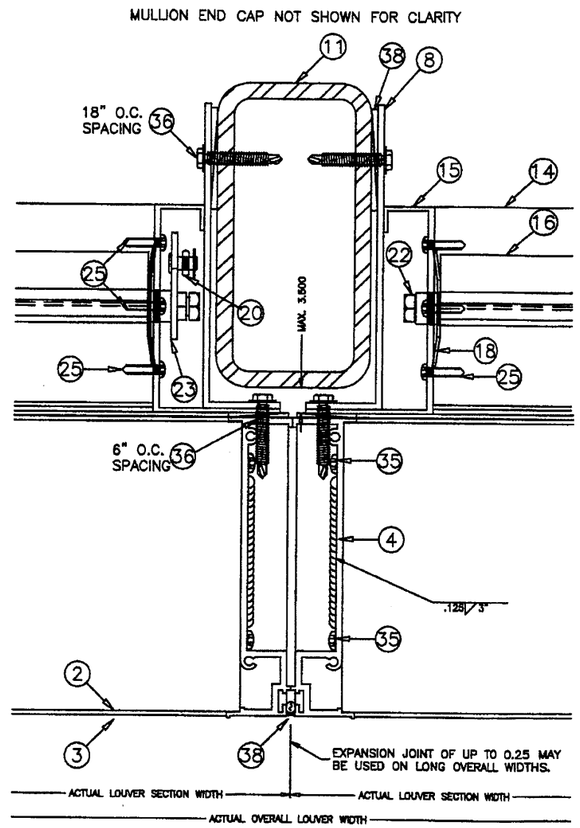

26A / 17/22 MULLION DETAIL LOUVER HEIGHT ≤ 144 IN.

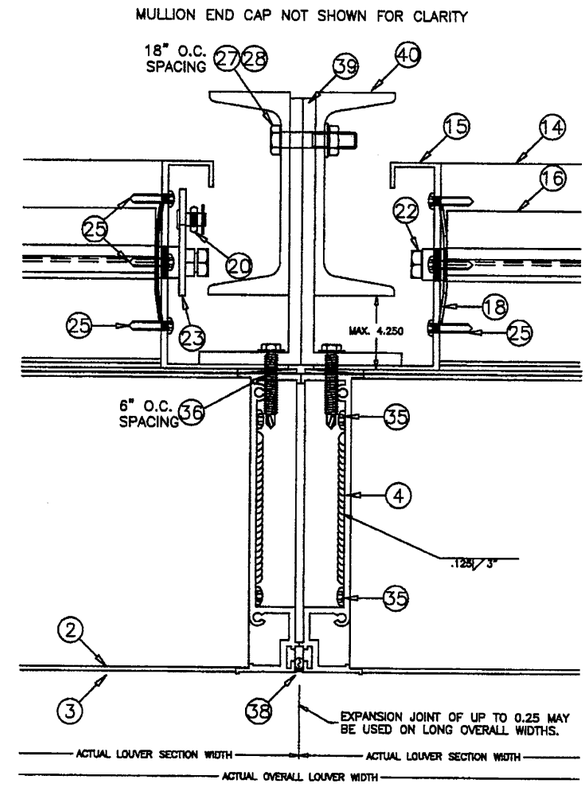

26B / 17/22 MULLION DETAIL LOUVER HEIGHT ≤ 96 IN.

PRODUCT RENEWED
as complying with the Florida Building Code
Acceptance No 12-0830.05
Expiration Date 12/06/2017
By
Miami-Dade Product Control

PRODUCT REVISED
as complying with the Florida Building Code
Acceptance No 10-0921.07
Expiration Date 12/06/2012
By
Miami Dade Product Control Division

DRAWN BY MES	DATE 8/25/2010
SCALE 1/3	
SHEET NO. 17 OF 22	
CAD DRAWING NO. K6746MD	

AROLITE
The look that works.™
SCHOFIELD, WISCONSIN 54476
715-359-6171

TITLE K6746MD LOUVER W/VCD-40 CONTINUOUS ANGLE MOUNT JAMB AND MULLION DETAILS

RICE ENGINEERING
105 School Creek Trail
Luxemburg, WI 54217
Phone: 920.845.1042
Fax: 920.845.1048
www.rice-inc.com

Florida Firm No: F-01000005061
Certificate of Authorization: #9090
L. David Rice
Registration No: 50923

L. DAVID RICE LICENSE No. 50923 STATE OF FLORIDA PROFESSIONAL ENGINEER

SEP 03 2010

NOTES:

1. OTHER SHAPES MAY APPLY PROVIDING THEY ARE SIMILAR TO THOSE SHOWN AND HAVE CORNER CONSTRUCTION AS DESCRIBED ON ALL SHEETS.

2. ALL SHAPED LOUVER PANELS ARE RESTRICTED TO THE SAME PANEL WIDTH AND PRESSURE AS THE RECTANGULAR LOUVER PANELS AND MAY BE STACKED VERTICALLY AND HORIZONTALLY THE SAME AS THE RECTANGULAR PANELS.

3. WHEN SECTIONS EXCEED 36" IN LENGTH BLADE SUPPORT ANGLE AND BRACKETS ARE REQUIRED.

AVAILABLE SHAPES

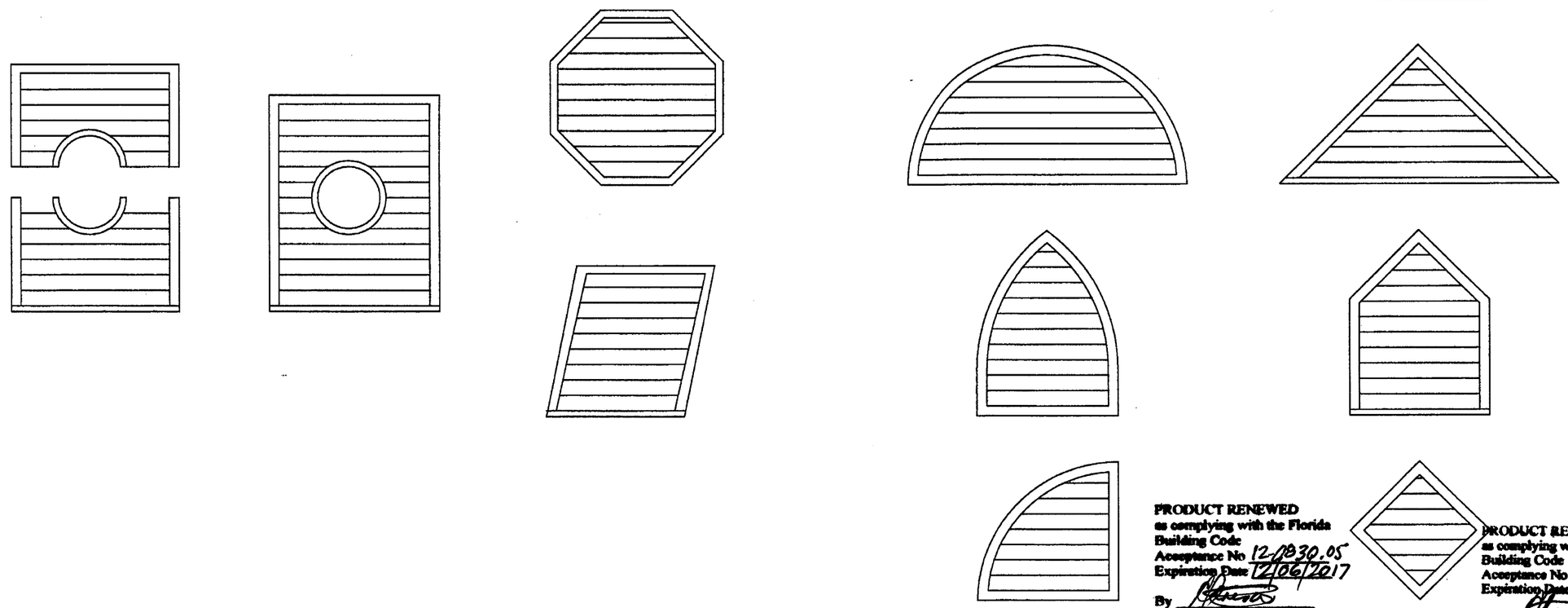

PRODUCT RENEWED
as complying with the Florida Building Code
Acceptance No 12-0830.05
Expiration Date 12/06/2017
By
Miami/Dade Product Control

PRODUCT REVISED
as complying with the Florida Building Code
Acceptance No 10-0921.07
Expiration Date 12/06/2012
By
Miami Dade Product Control Division

DATE	8/25/2010
DRAWN BY	MES
SCALE	
SHEET NO.	18 OF 22
CAD DRAWING NO.	K6746MD

AIROLITE
The look that works™
SCHOFIELD, WISCONSIN 54476
715-359-6171

TITLE
K6746MD LOUVER
W/ AND W/O VCD-40
AVAILABLE SHAPES

RICE
ENGINEERING
105 School Creek Trail
Luxemburg, WI 54217
Phone: 920.845.1042
Fax: 920.845.1048
www.rice-inc.com

Florida Firm No: F-01000005061
Certificate of Authorization: #9090
L. David Rice
Registration No: 50923

L. DAVID RICE
LICENSED
No. 50923
STATE OF FLORIDA
PROFESSIONAL ENGINEER

SEP 03 2010

*EMBEDMENT DEPTH IS EQUAL TO OVERALL FASTENER LENGTH FOR CONCRETE/CMU FASTENERS. IF SHIMS ARE USED, FASTENER LENGTH MUST BE INCREASED BY THICKNESS OF SHIMS.

ITEM	DESCRIPTION	MATERIAL	NOTES
1	LOUVER HEAD	6063-T5 ALUMINUM	
2	LOUVER BLADE	6063-T5 ALUMINUM	4.0625" MAX. SPACING
3	LOUVER SILL	6063-T5 ALUMINUM	
4	LOUVER JAMB	6063-T5 ALUMINUM	
5	LOUVER/DAMPER FLANGE	6063-T5 ALUMINUM	
6	FORMED SLEEVE	5052-H32 ALUMINUM	1/8" FORMED SLEEVE - DEPTH VARIES
7A	1 1/2 X 1 1/2 X 1/4 ANGLE	6063-T5 ALUMINUM	BLADE SUPPORT ANGLE
7B	1 1/2 X 1 1/2 X 1/4 ANGLE	6063-T5 ALUMINUM	USED AT HEAD/SILL/JAMB OF SLEEVE
8	1 1/2 X 6 X 1/8 ANGLE	6063-T5 ALUMINUM	JAMB ANGLE
9	1 1/2 X 1 1/2 X 1/8 ANGLE	6063-T5 ALUMINUM	USED AT HEAD/SILL/JAMBS OF LOUVER
10	1 1/2 X 1 1/2 X 1/8 ANGLE	6063-T5 ALUMINUM	USED AT HEAD & SILL OF SLEEVE
11	3 X 6 X 5/16 STEEL TUBE	A36 STEEL	SHIP LOOSE
12	4 X 6 X 1/4 ALUM. SHIMS	5052-H32 ALUMINUM	USED AT SILL FOR SUPPORT ANGLE
13	BLADE BRACKET	6063-T5 ALUMINUM	4.5" LONG
14	DAMPER HEAD/SILL	6063-T5 ALUMINUM	
15	DAMPER JAMB	6063-T5 ALUMINUM	
16	DAMPER BLADE	6063-T5 ALUMINUM	3.75 MAX. SPACING
17	DAMPER BLADE SEAL	SILICONE/RUBBER TYPE	MATERIAL VARIES
18	DAMPER JAMB SEAL	SS	
19	DAMPER TOP/BOTTOM CLOSURE	ALUMINUM	
20A	DAMPER LINKAGE BAR	GALV. STEEL	
20B	DAMPER LINKAGE BAR	SS	
21A	DAMPER AXLE BUSHING	DELRIN	
21B	DAMPER AXLE BUSHING	BRONZE	
21C	DAMPER AXLE BUSHING	SS	
22A	NON-DRIVE DAMPER AXLE ASST.	ZC STEEL PIN W/DELRIN BUSHING	
22B	NON-DRIVE DAMPER AXLE ASST.	ZC STEEL PIN W/BRONZE BUSHING	
22C	NON-DRIVE DAMPER AXLE ASST.	ZC STEEL PIN W/ SS BUSHING	
22D	NON-DRIVE DAMPER AXLE ASST.	SS PIN W/ DELRIN BUSHING	
22E	NON-DRIVE DAMPER AXLE ASST.	SS PIN W/ BRONZE BUSHING	
22F	NON-DRIVE DAMPER AXLE ASST.	SS PIN W/ SS BUSHING	
23A	DRIVE SIDE DAMPER AXLE ASST.	ZC/GALV. STEEL	
23B	DRIVE SIDE DAMPER AXLE ASST.	SS	
24A	1/4 DIA. E-CLIP	ZP	
24B	1/4 DIA. E-CLIP	SS	
25	#8 X .75 TPH TYPE AB SMS	SS	
26	#14 X .75 TEK	ZP	
27A	1/4-20 X 1.25 HH CS	ZP	
27B	1/4-20 X 1.5 HH CS	SS	
27C	1/4-20 X 0.75 HH CS	SS	
28A	1/4-20 NUT	ZP	
28B	1/4-20 NUT	SS	
29	REINFORCING STRAP	18-8 SS	
30	1/4-20 X .562 BALL SWIVEL	ZP	
31A	DAMPER BLADE DRIVE LEVER	SS	
31B	DAMPER BLADE DRIVE LEVER	GALV. STEEL	
32	DAMPER MANUAL QUAD ASSY.		
33	5/16 DIA. LINKAGE ROD	ZP	
34	#12-14 X 3/4" TPH SMS 18-8 SS	18-8 SS	
35	#10 X 1 1/4" SMS 316 SS	316 SS	
36	1/4" DIA. SCREW	SS	1 1/2" LONG
37	1/4" DIA. SCREW	SS	1" LONG
38A	DEAD LOAD SHIMS		NOT BY GREENHECK
38B	SEALANT AND BACKER ROD		NOT BY GREENHECK
39	5 1/4 X 2 X 1/4 ANGLE	6063-T5 ALUMINUM	USED AT JAMB OF LOUVER/SLEEVE
40	4" CHANNEL	6061-T6 ALUMINUM	USED AT JAMB OF LOUVER/SLEEVE
41	MULLION SLEEVE BRACKET	5052-H32 ALUMINUM	
42	1 1/4 X 1 1/4 X 1/8 ANGLE	6063-T5 ALUMINUM	MIN SIZE, JAMB ATTACHMENT ANGLE
43	BLADE SUPPORT, ALTERNATE	6063-T5 ALUMINUM	ALTERNATE STYLE
44	STEEL MULLION END CAP (SM)	STEEL	FACTORY WELDED TO MULLION
45	ALUMINUM MULLION END CAP (SM)	5052-H32 ALUMINUM	FACTORY WELDED TO MULLION
46	STEEL MULLION END CAP (LG)	STEEL	FACTORY WELDED TO MULLION
47	ALUM MULLION END CAP (LG)	5052-H32 ALUMINUM	FACTORY WELDED TO MULLION
48	MULLION MOUNTING ANG. BRACKET	STEEL 36 KSI, OR 6061-T6	MULLION MOUNTING ANGLE, H≤144
49	1/4" DIA. THREAD STUD	SS OR PLATED STEEL	1/2" MIN. LONG

PRODUCT REVISED
as complying with the Florida Building Code
Acceptance No 10-0921.07
Expiration Date 12/06/2012
By
Miami Dade Product Control Division

PRODUCT RENEWED
as complying with the Florida Building Code
Acceptance No 12-0830.05
Expiration Date 12/06/2017
By
Miami Dade Product Control

ITEM	CONCRETE	CMU	STEEL	WOOD	MIN.	FASTENER TYPE	ALL FASTENERS ARE STEEL OR STAINLESS					
50	JAMB PERIMETER ANGLE FASTENER, HEIGHT <=144						DIAMETER	# RQD.	CENTERS	EDGE	EMBED.*	
50A	X				2KSI	"POWERS WEDGE BOLT"	3/8	VARIES	6.00	1.215	3.500	
50B	X				4KSI	"POWERS WEDGE BOLT"	3/8	VARIES	6.00	1.215	3.500	
50C	X				2KSI	SCOTS TAPCON / TAPCON	1/4	VARIES	4.75	1.500	1.750	
50D	X				4KSI	SCOTS TAPCON / TAPCON	1/4	VARIES	6.00	1.500	1.750	
50E		X			1.5KSI	SCOTS TAPCON / TAPCON	1/4	VARIES	3.00	1.500	1.750	
50F			X		65KSI Fy	BOLT/NUT OR TAPPING SCREW	1/4	VARIES	6.00	0.500	0.125	
50G				X	SG 0.42	LAG	3/8	VARIES	6.00	1.500	2.375	
51	MULLION END PLATE FASTENER, HEIGHT <=144						DIAMETER	# RQD.	CENTERS	EDGE	EMBED.*	
51A	X				2KSI	"POWERS WEDGE BOLT"	3/8	8/END	1.50	1.75	3.500	
51B	X				4KSI	"POWERS WEDGE BOLT"	3/8	8/END	1.50	1.75	3.500	
51C	X				2KSI	SCOTS TAPCON / TAPCON	1/4	9/END	2.00	1.50	1.625	
51D	X				4KSI	SCOTS TAPCON / TAPCON	1/4	8/END	2.00	1.50	1.625	
51E			X		65KSI Fy	BOLT/NUT OR TAPPING SCREW	1/4	8/END	1.00	0.50	0.125	
51F				X	SG 0.42	LAG	3/8	7/END	1.50	1.75	2.375	GROUP
52	MULLION ANGLE MOUNT FASTENER, HEIGHT <=144						DIAMETER	# RQD.	CENTERS	EDGE	EMBED.*	CENTER
52A	X				2KSI	"POWERS WEDGE BOLT"	3/8	12/ANG.	3.375	2.250	3.500	3.766
52B	X				4KSI	"POWERS WEDGE BOLT"	3/8	9/ANG.	3.375	2.250	3.500	3.766
52C	X				2KSI	SCOTS TAPCON / TAPCON	1/4	32/ANG.	2.000	1.500	1.750	3.375
52D	X				4KSI	SCOTS TAPCON / TAPCON	1/4	27/ANG.	2.000	1.500	1.750	3.375
52E		X			1.5KSI	SCOTS TAPCON / TAPCON	1/4	32/ANG.	2.000	1.500	1.750	3.375
52F			X		65KSI Fy	BOLT/NUT OR TAPPING SCREW	1/4	16/ANG.	1.000	0.500	0.125	3.000
52G			X		65KSI Fy	BOLT/NUT OR TAPPING SCREW	1/4	11/ANG.	1.000	0.500	0.188	3.000
52H			X		65KSI Fy	BOLT/NUT OR TAPPING SCREW	1/4	16/ANG.	1.000	0.500	0.188	3.766
52I			X		65KSI Fy	BOLT/NUT OR TAPPING SCREW	5/16	12/ANG.	1.000	0.625	0.125	3.000
52J			X		65KSI Fy	BOLT/NUT OR TAPPING SCREW	5/16	16/ANG.	1.000	0.625	0.125	3.766
52K				X	SG 0.42	LAG	3/8	16/ANG.	1.500	1.500	2.875	3.766
52L				X	SG 0.42	LAG	3/8	11/ANG.	1.500	1.500	2.875	3.000
53	MULLION END PLATE FASTENER, HEIGHT <=96						DIAMETER	# RQD.	CENTERS	EDGE	EMBED.*	
53A	X				2KSI	"POWERS WEDGE BOLT"	3/8	5/CAP	1.50	1.6	3.500	
53B	X				4KSI	"POWERS WEDGE BOLT"	3/8	5/CAP	1.50	1.6	3.500	
53C	X				2KSI	"POWERS WEDGE BOLT"	3/8	5/CAP	2.00	1.75	3.500	
53D	X				4KSI	"POWERS WEDGE BOLT"	3/8	5/CAP	2.00	1.75	3.500	
53E	X				2KSI	SCOTS TAPCON / TAPCON	1/4	6/CAP	2.00	1.50	1.750	
53F	X				4KSI	SCOTS TAPCON / TAPCON	1/4	6/CAP	2.00	1.50	1.750	
53G			X		65KSI Fy	BOLT/NUT OR TAPPING SCREW	1/4	3/CAP	1.00	0.50	0.125	
53H				X	SG 0.42	LAG	3/8	5/CAP	1.50	1.75	2.375	GROUP
54	MULLION ANGLE MOUNT FASTENER, H<=96						DIAMETER	# RQD.	CENTERS	EDGE	EMBED.*	CENTER
54A	X				2KSI	"POWERS WEDGE BOLT"	3/8	4/ANG.	3.375	2.25	3.500	3.766
54B	X				4KSI	"POWERS WEDGE BOLT"	3/8	3/ANG.	3.375	2.25	3.500	3.766
54C	X				2KSI	SCOTS TAPCON / TAPCON	1/4	11/ANG.	2.000	1.50	1.750	3.375
54D	X				4KSI	SCOTS TAPCON / TAPCON	1/4	9/ANG.	2.000	1.50	1.750	3.375
54E		X			1.5KSI	SCOTS TAPCON / TAPCON	1/4	11/ANG.	2.000	1.50	1.750	3.375
54F			X		65KSI Fy	BOLT/NUT OR TAPPING SCREW	1/4	7/ANG.	1.000	0.50	0.125	3.766
54G			X		65KSI Fy	BOLT/NUT OR TAPPING SCREW	1/4	6/ANG.	1.000	0.50	0.125	3.000
54H				X	SG 0.42	LAG	3/8	5/ANG.	1.500	1.50	2.875	3.766
54I				X	SG 0.42	LAG	3/8	4/ANG.	1.500	1.50	2.875	3.000

GENERAL NOTES:

1. IT SHALL BE THE RESPONSIBILITY OF THE PERMIT HOLDER TO VERIFY THE STRUCTURAL INTEGRITY OF THE EXISTING STRUCTURE TO SUPPORT THE LOADS IMPOSED BY THE LOUVER(S).
2. THE K6746MD AND K6746MD WITH VCD-40 HAVE BEEN DESIGNED AND TESTED IN ACCORDANCE WITH THE FLORIDA BUILDING CODE (FBC) AND TEST PROTOCOLS TAS-201 (IMPACT), TAS-202 (UNIFORM STATIC PRESSURE), AND TAS-203 (CYCLIC FATIGUE).
3. MAXIMUM SINGLE SECTION SIZE IS 72" WIDE X 144" HIGH.
4. MAXIMUM ASSEMBLED LOUVER SIZE IS UNLIMITED WIDE X 144" HIGH.
5. SECTIONS OR ASSEMBLIES MAY BE STACKED VERTICALLY PROVIDING A SUITABLE STRUCTURAL SUPPORT IS DESIGNED AND INSTALLED BY OTHERS TO SUPPORT ALL LOADS TRANSFERRED FROM THE LOUVER.
6. CMU SHALL BE ASTM C90, TYPE II, 2,000 MIN PSI GROUT-FILLED.
7. THE SLEEVE MOUNT STYLE LOUVER UTILIZES AN ANCHORLESS INSTALLATION METHOD THAT DOES NOT REQUIRE THE USE OF FASTENERS INTO THE SUBSTRATE. IT MAY BE INSTALLED IN ANY SUBSTRATE THAT WILL WITHSTAND THE LOADS TRANSFERRED TO IT BY THE LOUVER. AIROLITE DOES NOT DETERMINE THE STRUCTURAL INTEGRITY OF THE SUBSTRATE STRUCTURE.
8. THE CONTINUOUS ANGLE MOUNT STYLE UTILIZES A CONTINUOUS JAMB ANGLE THAT IS ATTACHED TO THE SUBSTRATE BY FASTENERS. IT MAY BE INSTALLED IN CONCRETE, CMU, STEEL, OR WOOD ACCORDING TO THE FASTENER SCHEDULE. AIROLITE DOES NOT DETERMINE THE STRUCTURAL INTEGRITY OF THE SUBSTRATE STRUCTURE.
9. LOUVER ASSEMBLY IS QUALIFIED FOR A MAXIMUM DESIGN LOAD OF +/- 150 PSF.
10. LOUVER ASSEMBLY WITH AND WITHOUT VCD-40 DAMPER SHALL ONLY BE INSTALLED IN A LOCATION WHERE THE ROOM BEHIND THE LOUVER IS DESIGNED TO DRAIN WATER PENETRATING INTO THE ROOM AND THE ROOM WILL HOUSE WATER RESISTANT/WATER PROOF EQUIPMENT, COMPONENTS, AND/OR SUPPLIES.
11. INSTALLER TO PROVIDE SEPARATION OF DISSIMILAR MATERIALS AS REQUIRED.
12. THE VCD-40 MAY BE OPERATED BY A MANUAL QUADRANT OR BY AN ELECTRIC OR PNEUMATIC ACTUATOR. THE DAMPER'S ACTUATOR IS NOT PART OF THIS APPROVAL, BUT SHALL BE CERTIFIED BY AN INDEPENDENT TESTING AGENCY.
13. FRAME CONSTRUCTION. HEAD AND SILL ARE SQUARE CUT. JAMBS ARE SQUARE CUT @ HEAD AND MITERED @ SILL. CORNERS ARE SECURED WITH (2) #10x1-1/4 SMS. BLADES ARE SECURED TO JAMBS WITH (2) #10x1-1/4 SMS AND WELDED @ EACH END.
14. STEEL/STAINLESS-STEEL/ALUMINUM PARTS MAY BE MADE OUT OF ALTERNATE ALLOY THAT HAS EQUAL OR GREATER YIELD STRENGTH.
15. BLADE SUPPORT ANGLE AND BLADE SUPPORT BRACKETS ONLY REQUIRED WHEN ACTUAL LOUVER SECTION WIDTH IS GREATER THAN 36 INCHES.

DATE 8/25/2010
DRAWN BY MES
SCALE
SHEET NO. 19 OF 22
CAD DRAWING NO. K6746MD

AIROLITE
The look that works™
SCHOFIELD, WISCONSIN 54476
715-359-6171

TITLE K6746MD LOUVER W/ AND W/O VCD-40 SLEEVE/CONTINUOUS MOUNT NOTES/BILL OF MATERIAL

RICE ENGINEERING
105 School Creek Trail
Luxemburg, WI 54217
Phone: 920.845.1042
Fax: 920.845.1048
www.rice-inc.com

Florida Firm No: F-01000005061
Certificate of Authorization: #9090
L. David Rice
Registration No: 50923

L. DAVID RICE LICENSE No. 50923 STATE OF FLORIDA PROFESSIONAL ENGINEER
SEP 03 2010

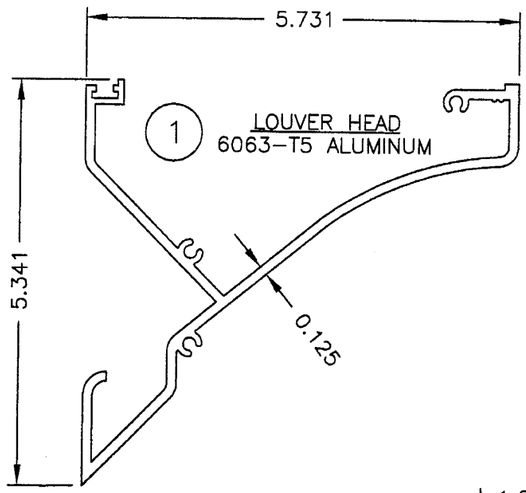

1 LOUVER HEAD
6063–T5 ALUMINUM

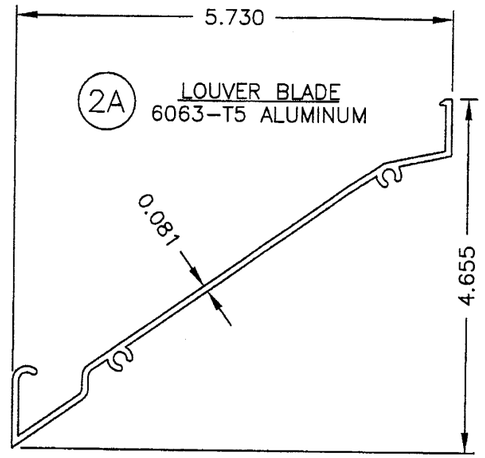

2A LOUVER BLADE
6063–T5 ALUMINUM

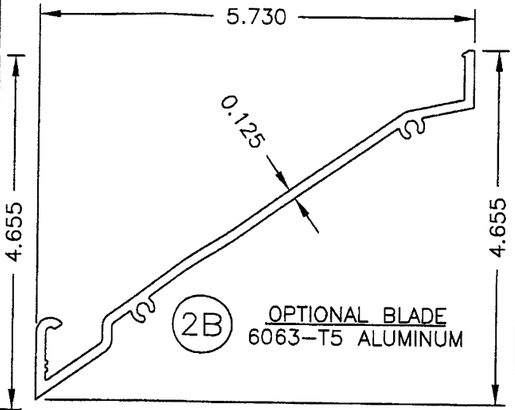

2B OPTIONAL BLADE
6063–T5 ALUMINUM

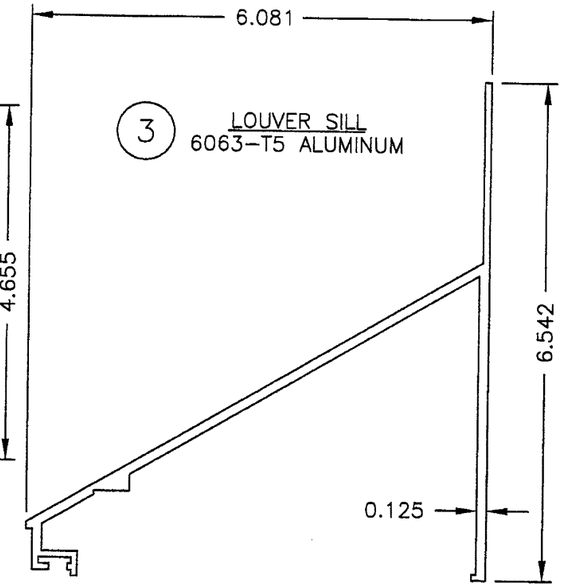

3 LOUVER SILL
6063–T5 ALUMINUM

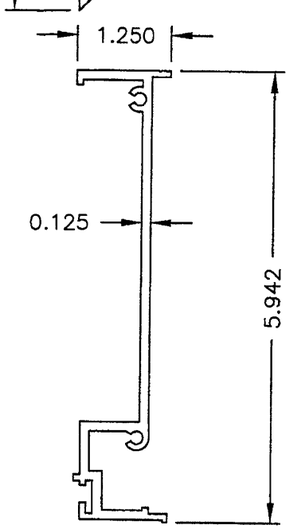

4A LOUVER JAMB
6063–T5 ALUMINUM

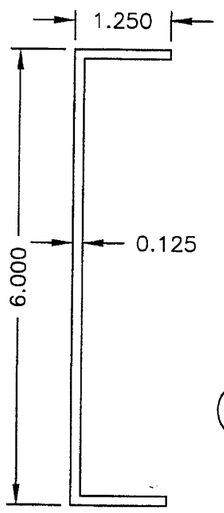

4B OPTIONAL JAMB
6063–T5 ALUMINUM

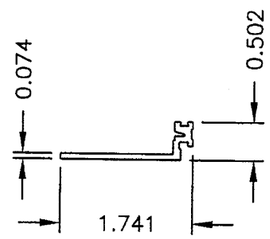

5 LOUVER/DAMPER FLANGE
6063–T5 ALUMINUM

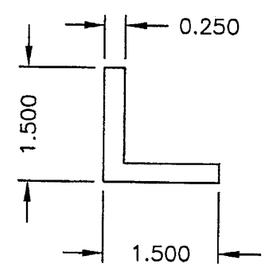

7 LOUVER BLADE
SUPPORT/SLEEVE MOUNT ANGLE
6063–T5 ALUMINUM

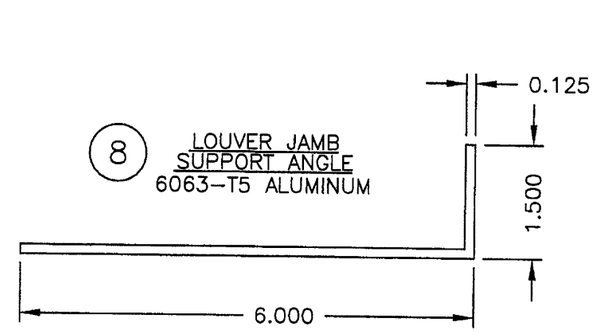

8 LOUVER JAMB
SUPPORT ANGLE
6063–T5 ALUMINUM

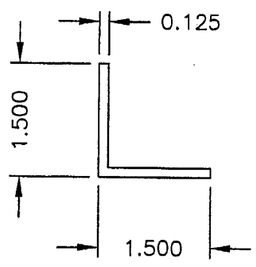

9 LOUVER SLEEVE
ATTACHMENT ANGLE
6063–T5 ALUMINUM

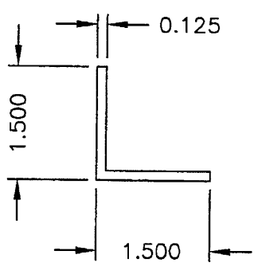

10 LOUVER SLEEVE FLANGE
SUPPORT ANGLE
6063–T5 ALUMINUM

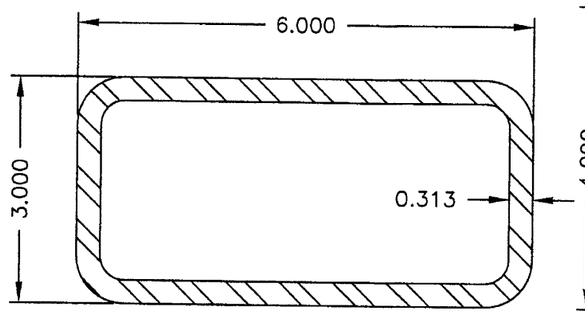

11 STEEL TUBE
A36

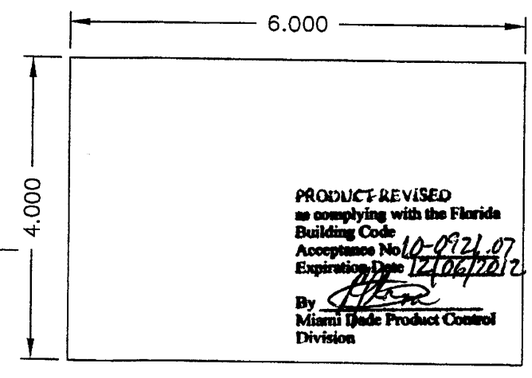

PRODUCT REVISED
as complying with the Florida
Building Code
Acceptance No 10-0921.07
Expiration Date 12/06/2012
By
Miami Dade Product Control
Division

12 ALUMINUM SUPPORT SHIM
5052–H32 ALUMINUM

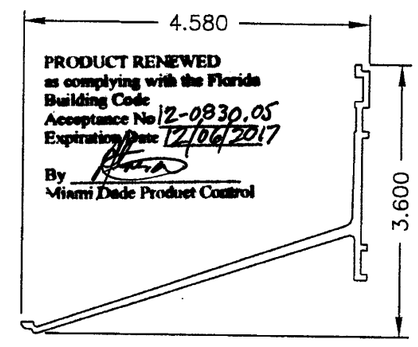

PRODUCT RENEWED
as complying with the Florida
Building Code
Acceptance No 12-0830.05
Expiration Date 12/06/2017
By
Miami Dade Product Control

13 LOUVER BLADE BRACKET
6063–T5 ALUMINUM

DATE 8/25/2010
DRAWN BY MES
SCALE 1:2
SHEET NO. 20 OF 22
CAD DRAWING NO. K6746MD

AIROLITE
The look that works.™
SCHOFIELD, WISCONSIN 54476
715-359-6171

TITLE
K6746MD LOUVER
SLEEVE/CONTINUOUS MOUNT
W/ AND W/O VCD-40
PART PROFILES

RICE
ENGINEERING
105 School Creek Trail
Luxemburg, WI 54217
Phone: 920.845.1042
Fax: 920.845.1048
www.rice-inc.com
Florida Firm No: F-01000005061
Certificate of Authorization: #9090
L. David Rice
Registration No: 50923

L. DAVID RICE
LICENSED
No. 50923
STATE OF FLORIDA
PROFESSIONAL ENGINEER

SEP 03 2010

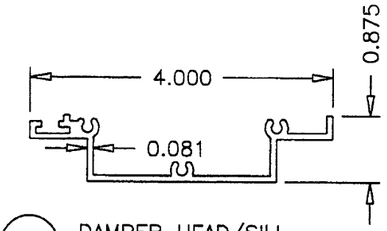

(14) DAMPER HEAD/SILL
6063–T5 ALUMINUM

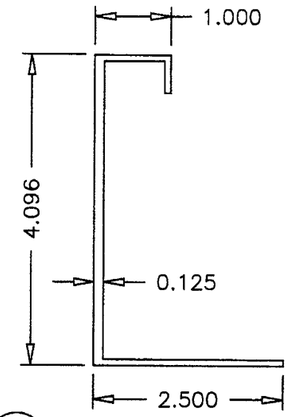

(15) DAMPER JAMB
6063–T5 ALUMINUM

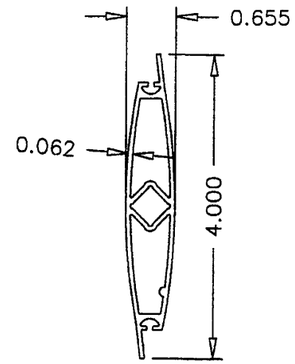

(16) DAMPER BLADE
6063–T5 ALUMINUM

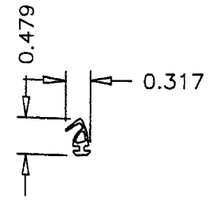

(17) DAMPER BLADE SEAL
MATERIAL VARIES

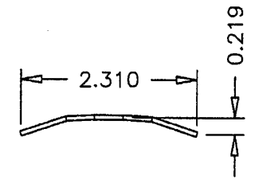

(18) DAMPER JAMB SEAL
.007" SS

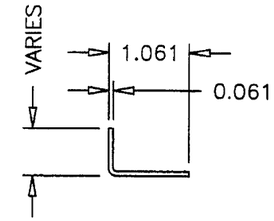

(19) DAMPER TOP/BOTTOM CLOSURE
ALUMINUM

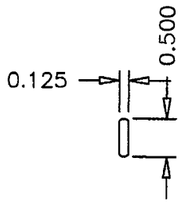

(20) DAMPER LINKAGE BAR
MATERIAL VARIES

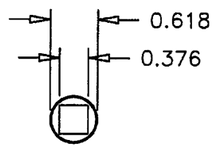

(21) DAMPER AXLE BUSHING (.445" LG.)
MATERIAL VARIES

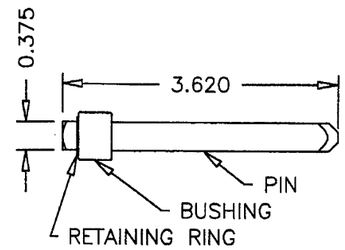

(22) NON–DRIVE DAMPER AXLE ASSY.
MATERIAL VARIES

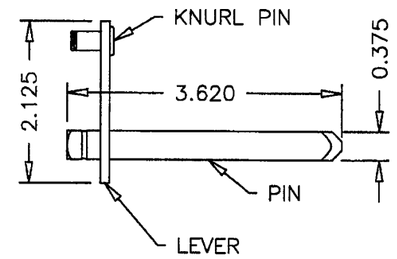

(23) DRIVE–SIDE DAMPER AXLE ASSY.
MATERIAL VARIES

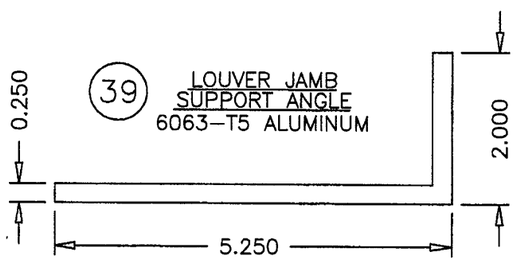

(39) LOUVER JAMB SUPPORT ANGLE
6063–T5 ALUMINUM

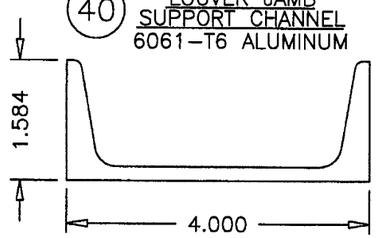

(40) LOUVER JAMB SUPPORT CHANNEL
6061–T6 ALUMINUM

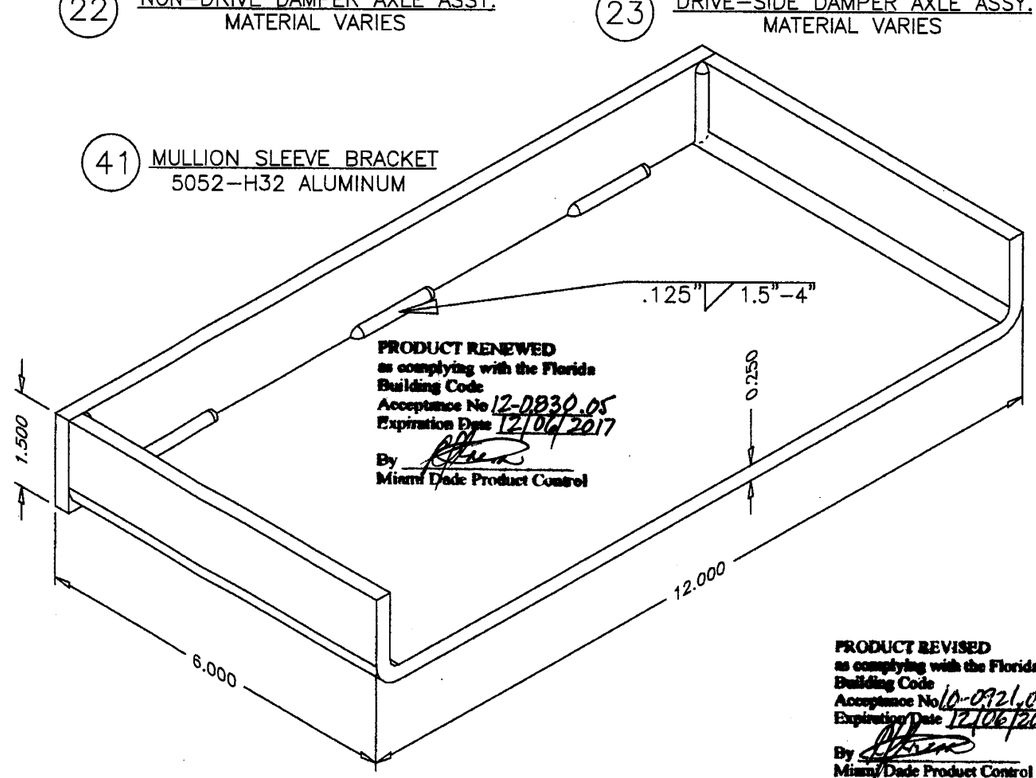

(41) MULLION SLEEVE BRACKET
5052–H32 ALUMINUM

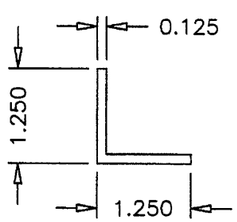

(42) LOUVER JAMB ATTACHMENT ANGLE
6063–T5 ALUMINUM

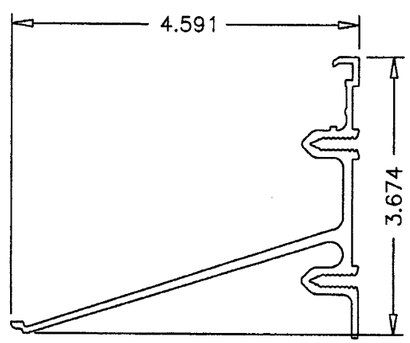

(43) ALTERNATE LOUVER BLADE BRACKET
6063–T5 ALUMINUM

PRODUCT RENEWED
as complying with the Florida Building Code
Acceptance No 12-0830.05
Expiration Date 12/06/2017
By
Miami Dade Product Control

PRODUCT REVISED
as complying with the Florida Building Code
Acceptance No 10-0921.07
Expiration Date 12/06/2012
By
Miami Dade Product Control Division

DATE	8/25/2010
DRAWN BY	MES
SCALE	1:2
SHEET NO.	21 OF 22
CAD DRAWING NO.	K6746MD

AIROLITE
The look that works.™
SCHOFIELD, WISCONSIN 54476
715-359-6171

TITLE: K6746MD LOUVER SLEEVE/CONTINUOUS MOUNT W/ AND W/O VCD-40 PART PROFILES

RICE ENGINEERING
105 School Creek Trail
Luxemburg, WI 54217
Phone: 920.845.1042
Fax: 920.845.1048
www.rice-inc.com

Florida Firm No: F-01000005061
Certificate of Authorization: #9090
L. David Rice
Registration No: 50923

L. DAVID RICE LICENSED No. 50923 STATE OF FLORIDA PROFESSIONAL ENGINEER

SEP 0 3 2010

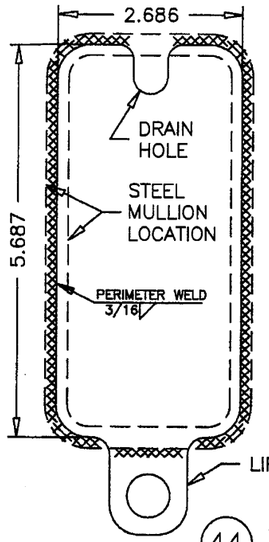

44 STEEL MULLION END CAP FOR SLEEVE MOUNT 0.313 STEEL

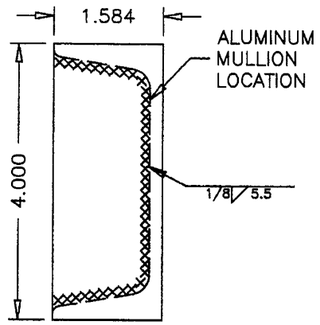

45 ALUMINUM MULLION END CAP FOR SLEEVE MOUNT 5052-H32, 0.25 ALUMINUM

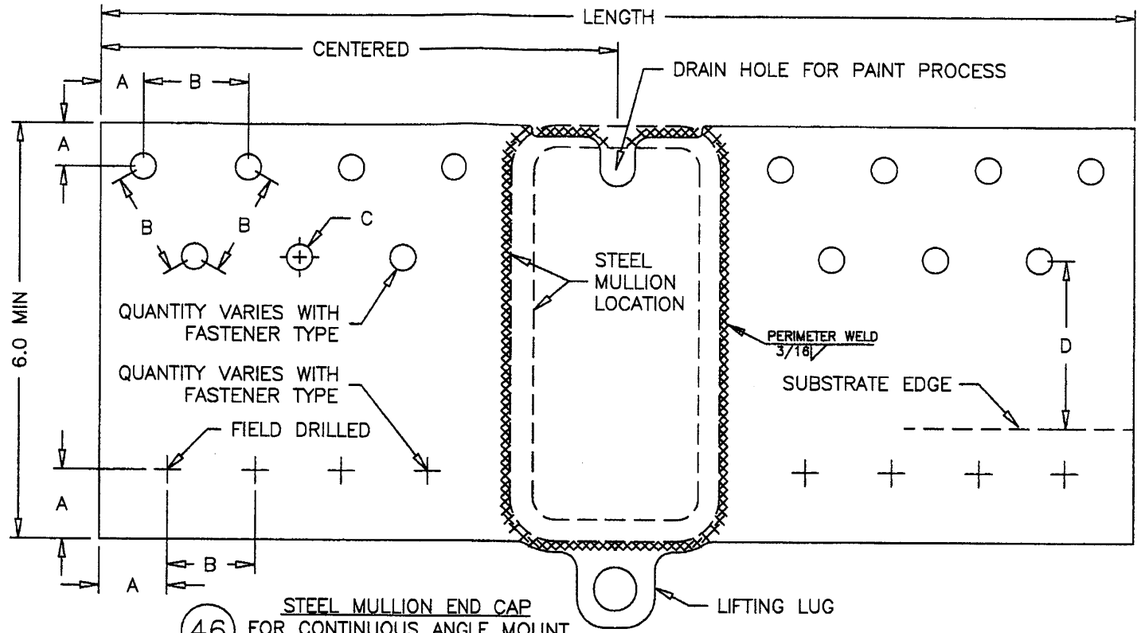

46 STEEL MULLION END CAP FOR CONTINUOUS ANGLE MOUNT 0.313 STEEL

DIM.	DESCRIPTION
A	≥0.375/0.50 FOR 1/4ø FASTENER IN ALUMINUM/STEEL
A	≥0.563/0.75 FOR 3/8ø FASTENER IN ALUMINUM/STEEL
B	≥FASTENER SPACING DISTANCE
C	≥FASTENER CLEARANCE HOLE DIAMETER
D	≥FASTENER SUBSTRATE EDGE DISTANCE
GROUP CENTER = CENTER OF FASTENER HOLE PATTERN	

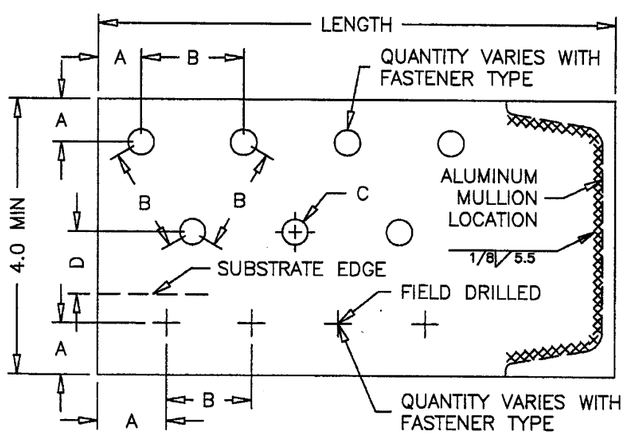

47 ALUMINUM MULLION END CAP FOR CONTINUOUS ANGLE MOUNT 5052-H32, 0.25 ALUMINUM

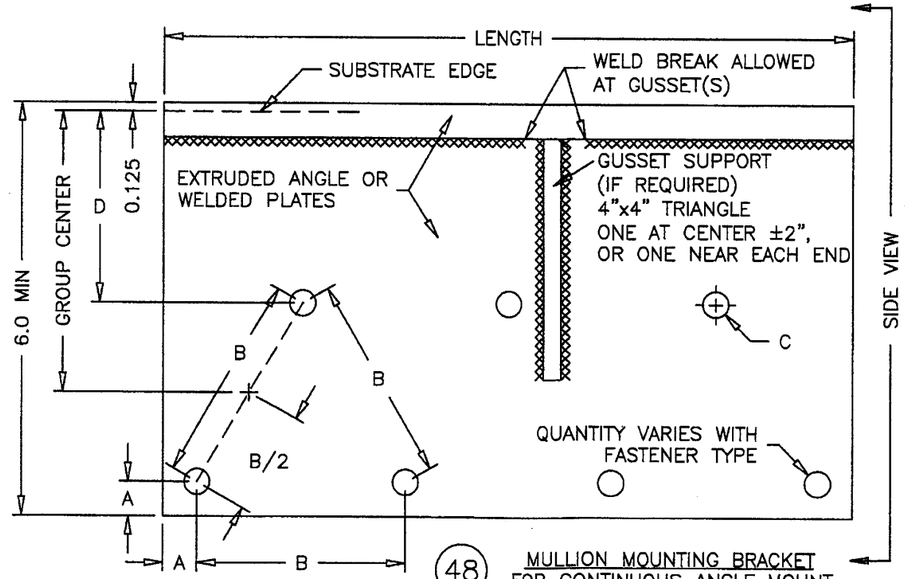

48 MULLION MOUNTING BRACKET FOR CONTINUOUS ANGLE MOUNT VARIES, SEE B.O.M. & TABLES BELOW

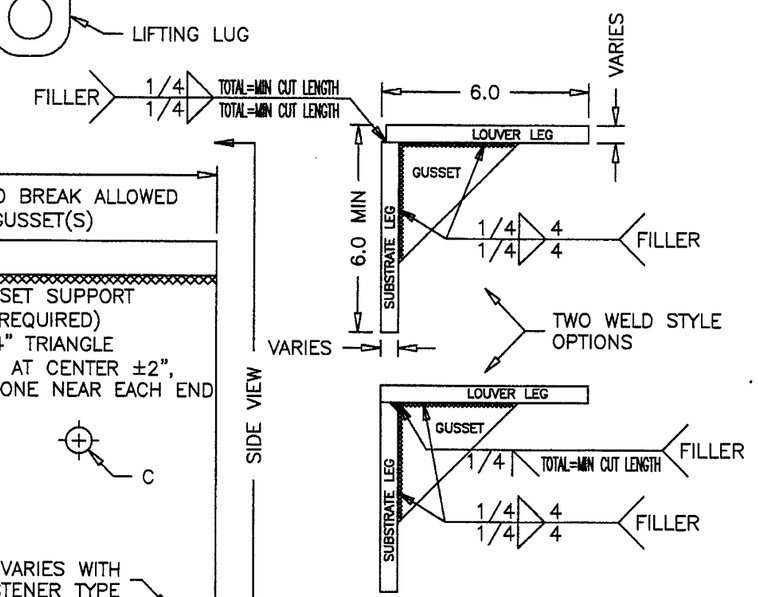

SIDE VIEWS SHOWN AT 1/2 SCALE

FILLER MAT'L. ALUM=4043 OR 5356 STEEL=E70XX

MULLION MOUNTING BRACKET TABLE, 1 OF 2						
LOUVER HEIGHT	SUBSTRATE LEG THK.	LOUVER LEG THK.	GUSSET THK.	MIN CUT LENGTH	MAT'L TYPE	PROCESS TYPE
≤144	≥1/2	≥1/2	NA	16.5	6061-T6	EXTRUDED
≤144	≥7/16	≥7/16	NA	24	A36	ROLLED
≤144	≥1/2	≥1/2	NA	18.5	A36	ROLLED
≤144	≥5/16	≥1/4	≥5/16	20	6061-T6	WELDED
≤144	≥5/16	≥3/16	≥5/16	20	STEEL	WELDED

MULLION MOUNTING BRACKET TABLE, 2 OF 2						
LOUVER HEIGHT	SUBSTRATE LEG THK.	LOUVER LEG THK.	GUSSET THK.	MIN CUT LENGTH	MAT'L TYPE	PROCESS TYPE
≤96	≥1/2	≥1/2	NA	6.6	6061-T6	EXTRUDED
≤96	≥3/8	≥3/8	NA	12.34	STEEL	ROLLED
≤96	≥7/16	≥7/16	NA	9	STEEL	ROLLED
≤96	≥5/16	≥1/4	≥5/16	9	6061-T6	WELDED
≤96	≥5/16	≥3/16	≥5/16	9	STEEL	WELDED

PRODUCT RENEWED
as complying with the Florida Building Code
Acceptance No 12-0830.05
Expiration Date 12/06/2017
By
Miami Dade Product Control

PRODUCT REVISED
as complying with the Florida Building Code
Acceptance No 10-0921.07
Expiration Date 12/06/2012
By
Miami Dade Product Control Division

DRAWN BY MES | DATE 8/25/2010
SCALE 1:2.2 | SHEET NO. 22 OF 22
CAD DRAWING NO. K6746MD

AIROLITE
The look that works.™
SCHOFIELD, WISCONSIN 54476
715-359-6171

TITLE K6746MD LOUVER SLEEVE/CONTINUOUS MOUNT W/ AND W/O VCD-40 PART PROFILES

RICE ENGINEERING
105 School Creek Trail
Luxemburg, WI 54217
Phone: 920.845.1042
Fax: 920.845.1048
www.rice-inc.com

Florida Firm No: F-01000005061
Certificate of Authorization: #9090
L. David Rice
Registration No: 50923

SEP 0 3 2010

L. DAVID RICE LICENSE No. 50923 STATE OF FLORIDA PROFESSIONAL ENGINEER