MIAMI-DADE COUNTY
PRODUCT CONTROL SECTION
11805 SW 26 Street, Room 208
Miami, Florida 33175-2474
T (786) 315-2590 F (786) 315-2599
www.miamidade.gov/economy

DEPARTMENT OF REGULATORY AND ECONOMIC RESOURCES (RER)
BOARD AND CODE ADMINISTRATION DIVISION

# NOTICE OF ACCEPTANCE (NOA)

**Greenheck Fan Corporation**
**P.O. Box 410**
**Schofield, WI 54476**

**SCOPE:**

This NOA is being issued under the applicable rules and regulations governing the use of construction materials. The documentation submitted has been reviewed and accepted by Miami-Dade County RER-Product Control Section to be used in Miami Dade County and other areas where allowed by the Authority Having Jurisdiction (AHJ).

This NOA shall not be valid after the expiration date stated below. The Miami-Dade County Product Control Section (In Miami Dade County) and/or the AHJ (in areas other than Miami Dade County) reserve the right to have this product or material tested for quality assurance purposes. If this product or material fails to perform in the accepted manner, the manufacturer will incur the expense of such testing and the AHJ may immediately revoke, modify, or suspend the use of such product or material within their jurisdiction. RER reserves the right to revoke this acceptance, if it is determined by Miami-Dade County Product Control Section that this product or material fails to meet the requirements of the applicable building code.

This product is approved as described herein, and has been designed to comply with the Florida Building Code, including the High Velocity Hurricane Zone.

**DESCRIPTION: Model ESD-635D Aluminum Louver with and without VCD-40 Damper**

**APPROVAL DOCUMENT:** Drawing No. **ESD-635D**, titled "ESD-635D Louver", sheets 1 through 22 of 22, dated 08/25/2010, prepared by Rice Engineering, signed and sealed by L. David Rice, P.E., bearing the Miami-Dade County Product Control renewal stamp with the Notice of Acceptance number and expiration date by the Miami-Dade County Product Control Section.

**MISSILE IMPACT RATING: Large and Small Missile Impact Resistant**

**LABELING:** Each unit shall bear a permanent label with the manufacturer's name or logo, Schofield, WI or Frankfort, KY, model/series, and following statement: "Miami-Dade County Product Control Approved", unless otherwise noted herein.

**RENEWAL** of this NOA shall be considered after a renewal application has been filed and there has been no change in the applicable building code negatively affecting the performance of this product.

**TERMINATION** of this NOA will occur after the expiration date or if there has been a revision or change in the materials, use, and/or manufacture of the product or process. Misuse of this NOA as an endorsement of any product, for sales, advertising or any other purposes shall automatically terminate this NOA. Failure to comply with any section of this NOA shall be cause for termination and removal of NOA.

**ADVERTISEMENT:** The NOA number preceded by the words Miami-Dade County, Florida, and followed by the expiration date may be displayed in advertising literature. If any portion of the NOA is displayed, then it shall be done in its entirety.

**INSPECTION:** A copy of this entire NOA shall be provided to the user by the manufacturer or its distributors and shall be available for inspection at the job site at the request of the Building Official.

This NOA **renews NOA # 10-0921.09** and consists of this page 1 and evidence page E-1, as well as approval document mentioned above.

The submitted documentation was reviewed by **Carlos M. Utrera, P.E.**

MIAMI-DADE COUNTY APPROVED

11/08/2012

**NOA No. 12-0830.07**
**Expiration Date: December 6, 2017**
**Approval Date: November 15, 2012**

## NOTICE OF ACCEPTANCE: EVIDENCE SUBMITTED

**A. DRAWINGS** ***"Submitted under NOA # 10-0921.09"***

1. Drawing No. **ESD-635D**, titled "ESD-635D Louver", sheets 1 through 22 of 22, dated 08/25/2010, prepared by Rice Engineering, signed and sealed by L. David Rice, P.E.

**B. TESTS** ***"Submitted under NOA # 08-0229.06"***

1. Test report on Wind Driven Rain Resistance per FBC, TAS 110(A)-95, prepared by Architectural Testing, Inc., Test Report No. **79201.01-109-18,** dated 02/05/2008, signed and sealed by Michael D. Stremmel, P.E.

***"Submitted under NOA # 07-1015.06"***

2. Test reports on 1) Uniform Static Air Pressure Test, Loading per FBC TAS 202-94
   2) Large Missile Impact Test per FBC, TAS 201-94
   3) Cyclic Wind Pressure Loading per FBC, TAS 203-94
   along with marked-up drawings and installation diagram of Series/Model ESD-635D, fixed aluminum louvers, prepared by Architectural Testing, Inc., Test Report No. **74297.01-602-18**, dated 09/25/2007, signed and sealed by Joseph A. Reed, P.E.
3. Test report on Standard Test Methods for Tensile Testing of Metallic Materials, per ASTM E8-03, prepared by Architectural Testing, Inc., Test Report No.**74297.02-602-18**, dated 10/01/2007, signed and sealed by Joseph A. Reed, P.E.

**C. CALCULATIONS** ***"Submitted under NOA # 10-0921.09"***

1. Structural calculations, prepared by Rice Engineering, dated 09/03/2010, signed and sealed by L. David Rice, P.E.

**D. QUALITY ASSURANCE**

1. Miami-Dade Department of Regulatory and Economic Resources (RER)

**E. MATERIAL CERTIFICATIONS**

1. None.

**F. STATEMENTS**

1. Statement letter of code conformance to 2010 FBC issued by Rice Engineering, dated 11/06/2012, signed and sealed by L. David Rice, P.E.

***"Submitted under NOA # 10-0921.09"***

2. Statement letters of conformance and no financial interest issued by Rice Engineering, dated 09/03/2010, signed and sealed by L. David Rice, P.E.

11/08/2012

**Carlos M. Utrera, P.E.**
**Product Control Examiner**
**NOA No. 12-0830.07**
**Expiration Date: December 6, 2017**
**Approval Date: November 15, 2012**

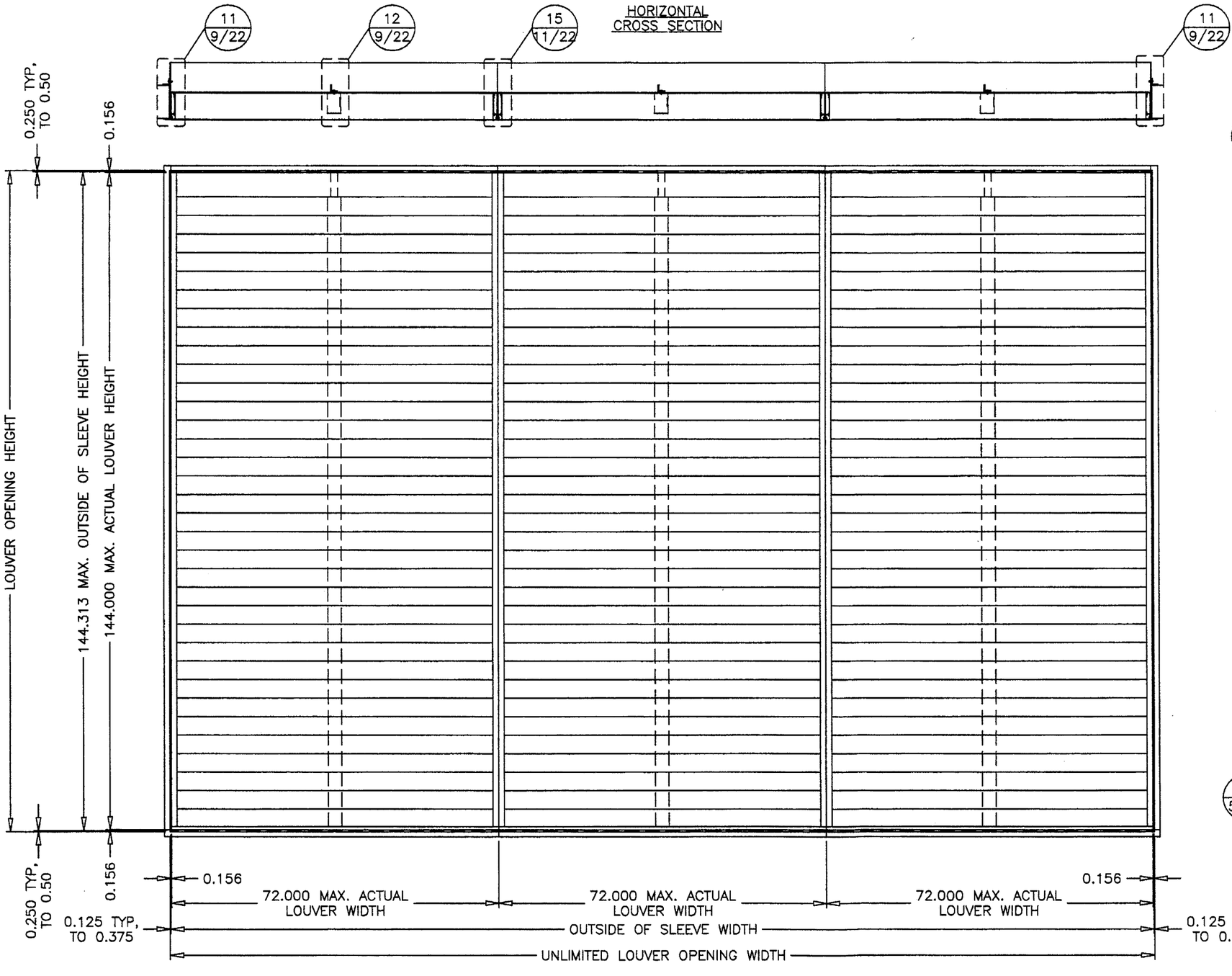


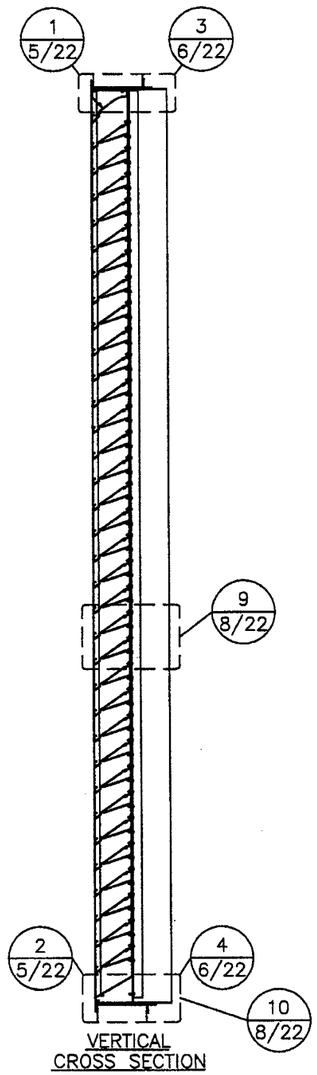


**PRODUCT RENEWED**
as complying with the Florida Building Code
Acceptance No 12.0830.07
Expiration Date 12/06/2017
By
Miami Dade Product Control

**PRODUCT REVISED**
as complying with the Florida Building Code
Acceptance No 10.0921.09
Expiration Date 12/06/2012
By
Miami Dade Product Control Division

DRAWN BY MES | DATE 8/25/2010
SCALE 1:24 | SHEET NO. 1 OF 22
CAD DRAWING NO. ESD-635D

GREENHECK
P.O.BOX 410 SCHOFIELD,
WISCONSIN 54476-0410

TITLE
ESD-635D LOUVER
FLANGE FRAME
SLEEVE MOUNT
ELEVATION

**RICE**
**ENGINEERING**
105 School Creek Trail
Luxemburg, WI 54217
Phone: 920.845.1042
Fax: 920.845.1048
www.rice-inc.com

Florida Firm No: F-01000005061
Certificate of Authorization: #9090
L. David Rice
Registration No: 50923

L. DAVID RICE
LICENSE
No. 50923
STATE OF FLORIDA
PROFESSIONAL ENGINEER

SEP 03 2010

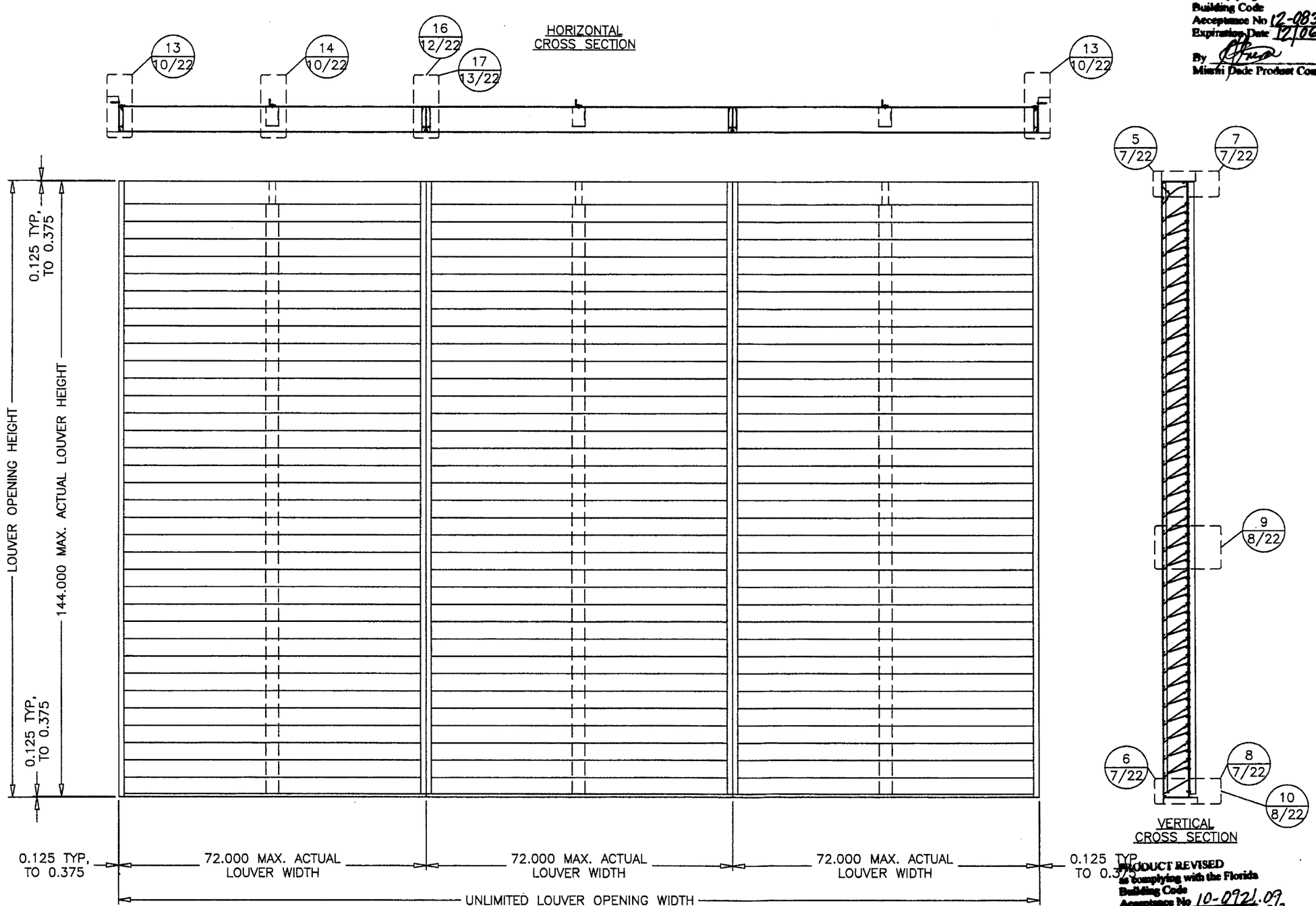


PRODUCT RENEWED
as complying with the Florida Building Code
Acceptance No 12-0830.07
Expiration Date 12/06/2017
By
Miami Dade Product Control

PRODUCT REVISED
as complying with the Florida Building Code
Acceptance No 10-0921.09
Expiration Date 12/06/2012
By
Miami Dade Product Control Division

SEP 0 3 2010

DRAWN BY MES
DATE 8/25/2010
SCALE 1:24
SHEET NO. 2 OF 22
CAD DRAWING NO. ESD-635D

GREENHECK
P.O.BOX 410 SCHOFIELD, WISCONSIN 54476-0410

TITLE
ESD-635D LOUVER
CONTINUOUS ANGLE MOUNT
ELEVATION

RICE ENGINEERING
105 School Creek Trail
Luxemburg, WI 54217
Phone: 920.845.1042
Fax: 920.845.1048
www.rice-inc.com

Florida Firm No: F-01000005061
Certificate of Authorization: #9090
L. David Rice
Registration No: 50923

L. DAVID RICE
LICENSED
No. 50923
STATE OF FLORIDA
PROFESSIONAL ENGINEER

**PRODUCT RENEWED**
as complying with the Florida Building Code
Acceptance No 12-0830.07
Expiration Date 12/06/2017
By _____
Miami Dade Product Control

**PRODUCT REVISED**
as complying with the Florida Building Code
Acceptance No 10-0922.09
Expiration Date 12/06/2012
By _____
Miami Dade Product Control Division

HORIZONTAL CROSS SECTION

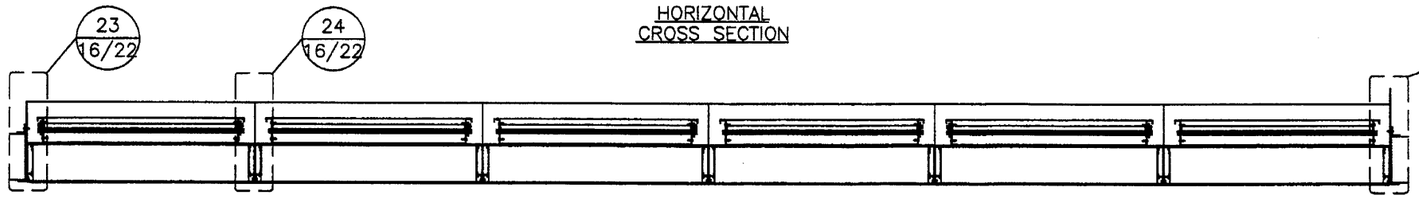


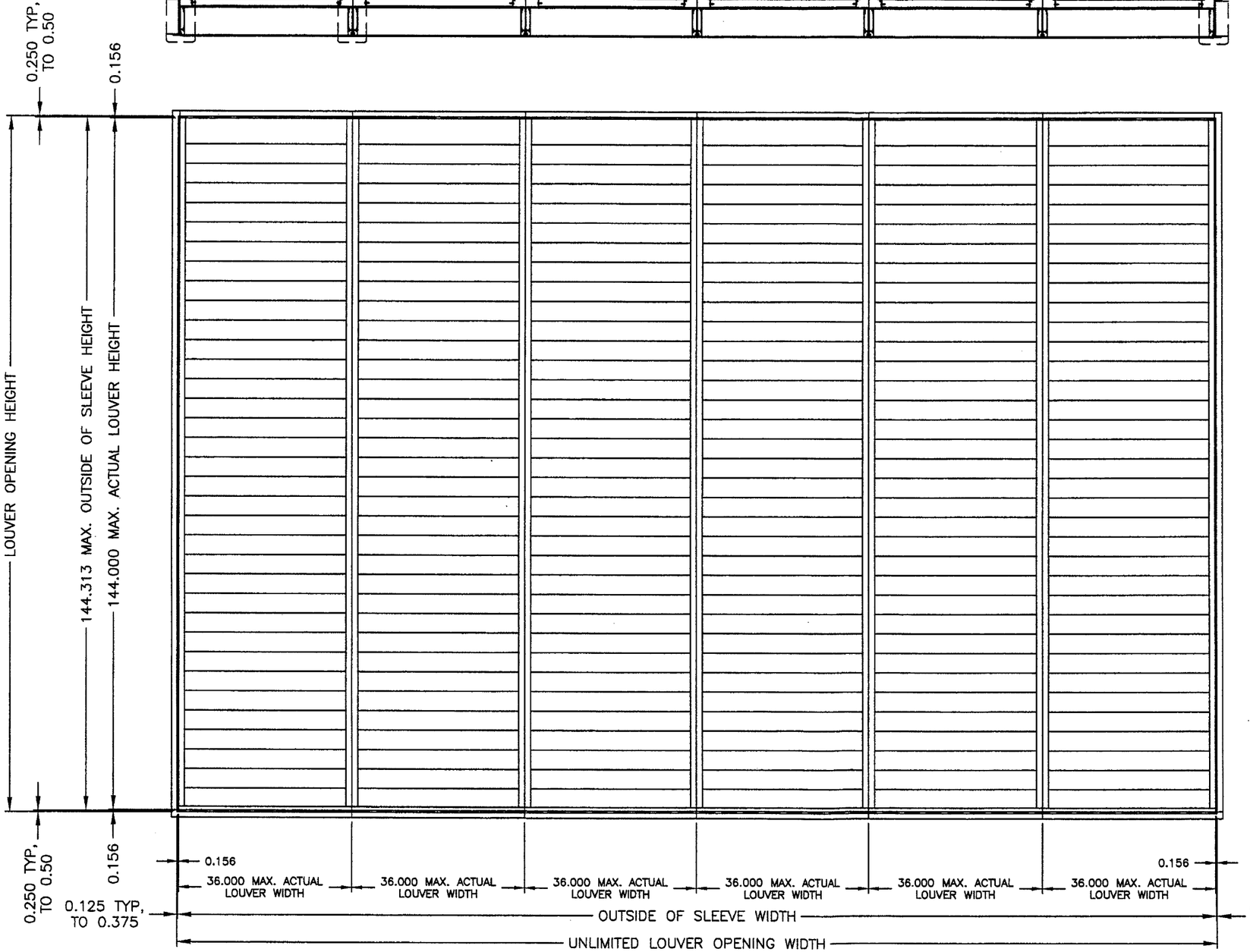


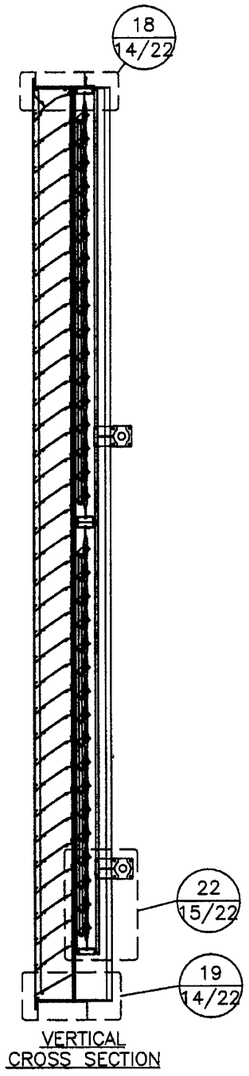


VERTICAL CROSS SECTION

| | |
|---|---|
| DRAWN BY | MES |
| DATE | 8/25/2010 |
| SCALE | 1:24 |
| SHEET NO. | 3 OF 22 |
| CAD DRAWING NO. | ESD-635D |


GREENHECK
P.O.BOX 410 SCHOFIELD, WISCONSIN 54476-0410


TITLE
ESD-635D LOUVER W/VCD-40
FLANGE FRAME
SLEEVE MOUNT
ELEVATION


**RICE ENGINEERING**
105 School Creek Trail
Luxemburg, WI 54217
Phone: 920.845.1042
Fax: 920.845.1048
www.rice-inc.com

Florida Firm No: F-01000005061
Certificate of Authorization: #9090
L. David Rice
Registration No: 50923


L. DAVID RICE LICENSE No. 50923 STATE OF FLORIDA PROFESSIONAL ENGINEER

SEP 03 2010

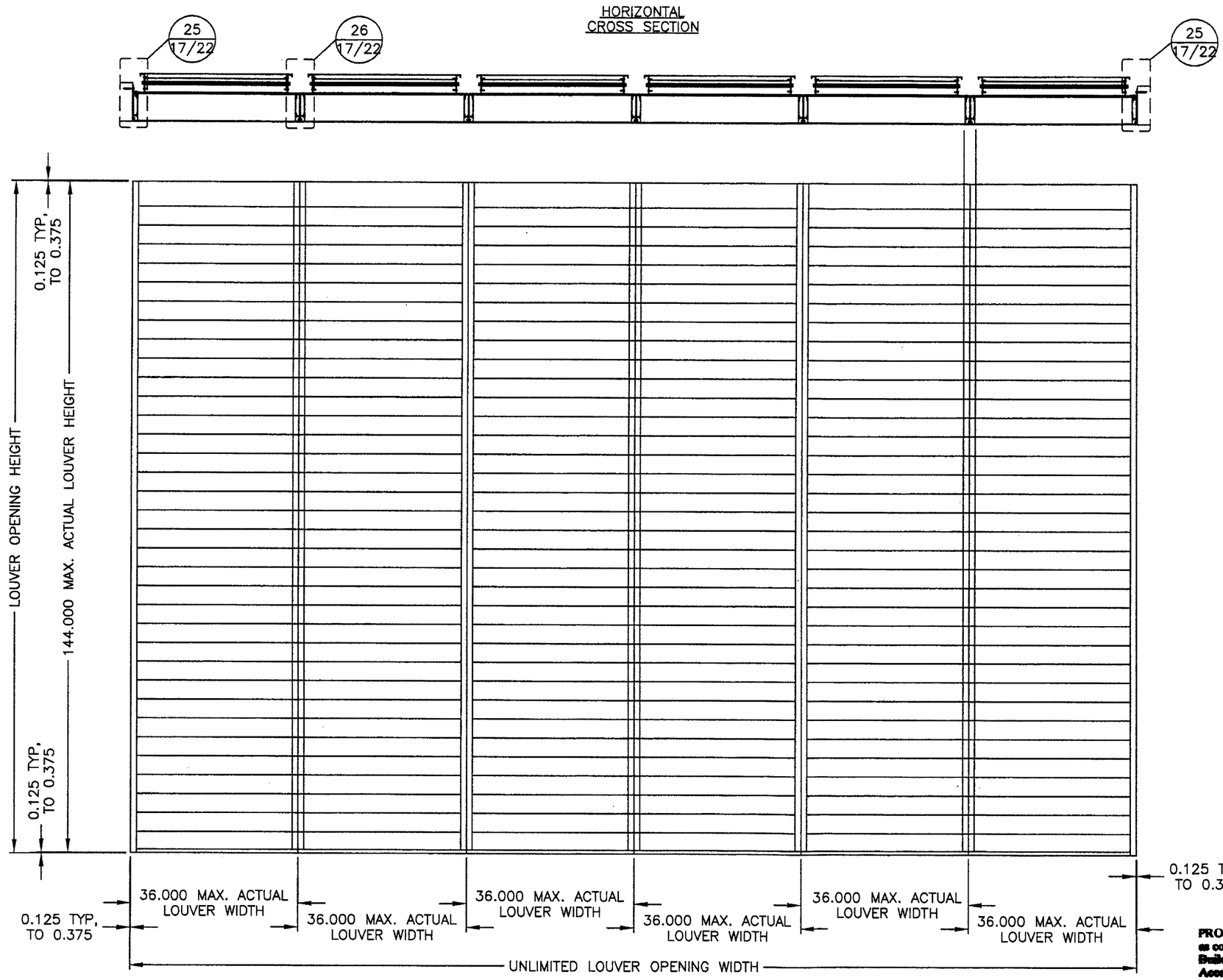


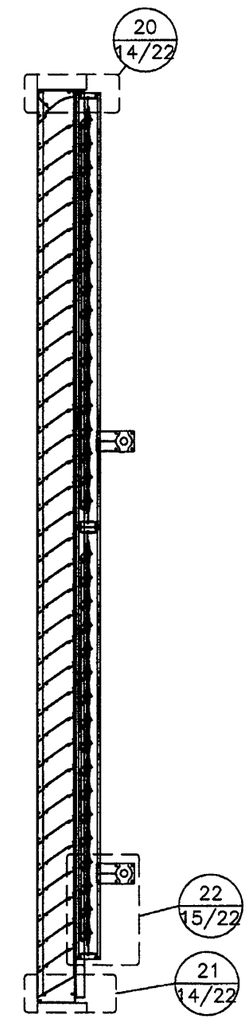


**PRODUCT RENEWED**
as complying with the Florida Building Code
Acceptance No 12-0830.07
Expiration Date 12/06/2017
By
Miami-Dade Product Control

**PRODUCT REVISED**
as complying with the Florida Building Code
Acceptance No 10-0921.09
Expiration Date 12/06/2012
By
Miami-Dade Product Control Division

SEP 03 2010

DRAWN BY MES
DATE 8/25/2010
SCALE 1:24
SHEET NO. 4 OF 22
CAD DRAWING NO. ESD-635D

TITLE
ESD-635D LOUVER W/VCD-40
CONTINUOUS ANGLE MOUNT
ELEVATION

GREENHECK
P.O.BOX 410 SCHOFIELD,
WISCONSIN 54476-0410

RICE
ENGINEERING
105 School Creek Trail
Luxemburg, WI 54217
Phone: 920.845.1042
Fax: 920.845.1048
www.rice-inc.com

Florida Firm No: F-01000005061
Certificate of Authorization: #9090
L. David Rice
Registration No: 50923

L. DAVID RICE
LICENSED
No. 50923
STATE OF
FLORIDA
PROFESSIONAL ENGINEER

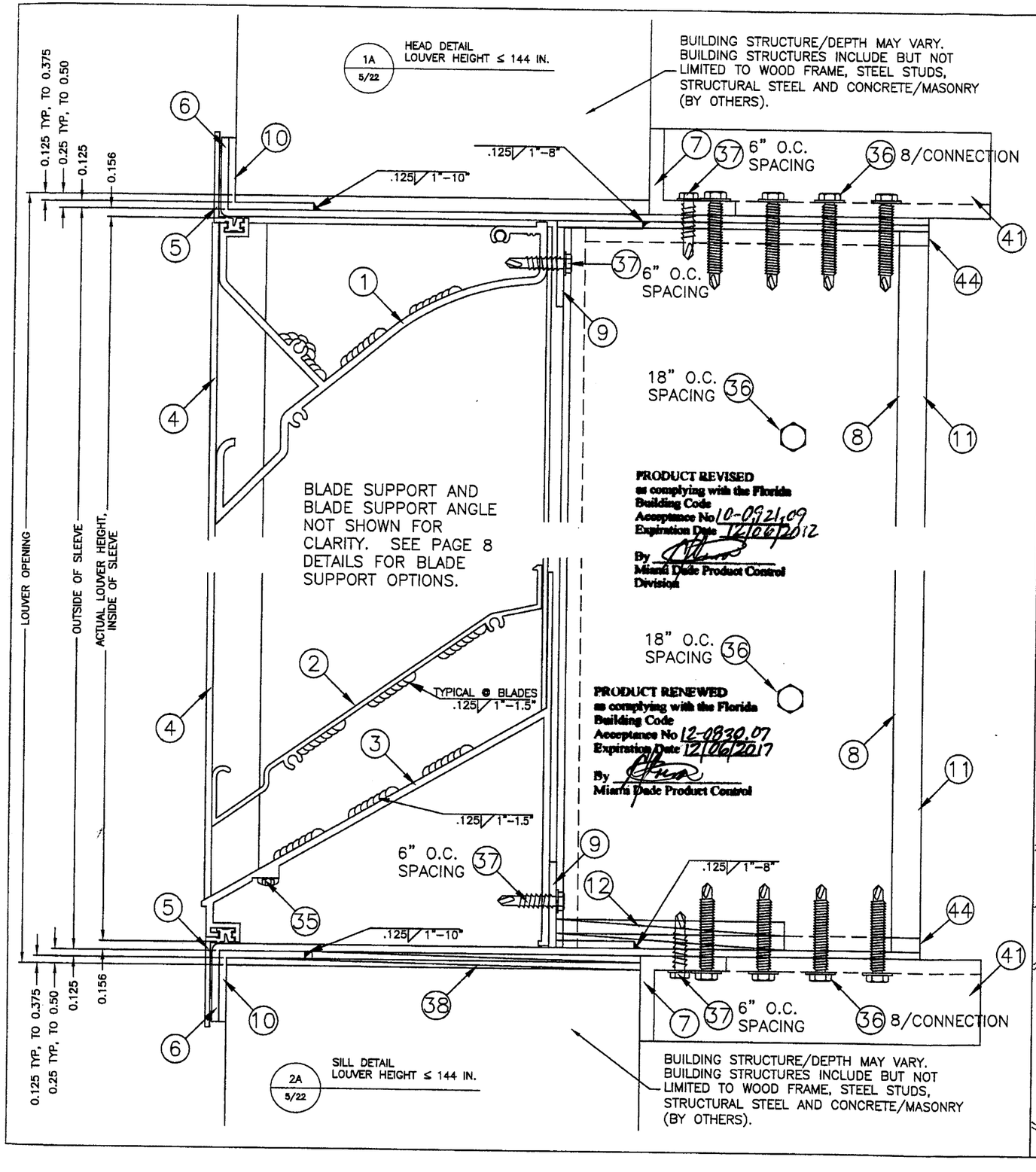


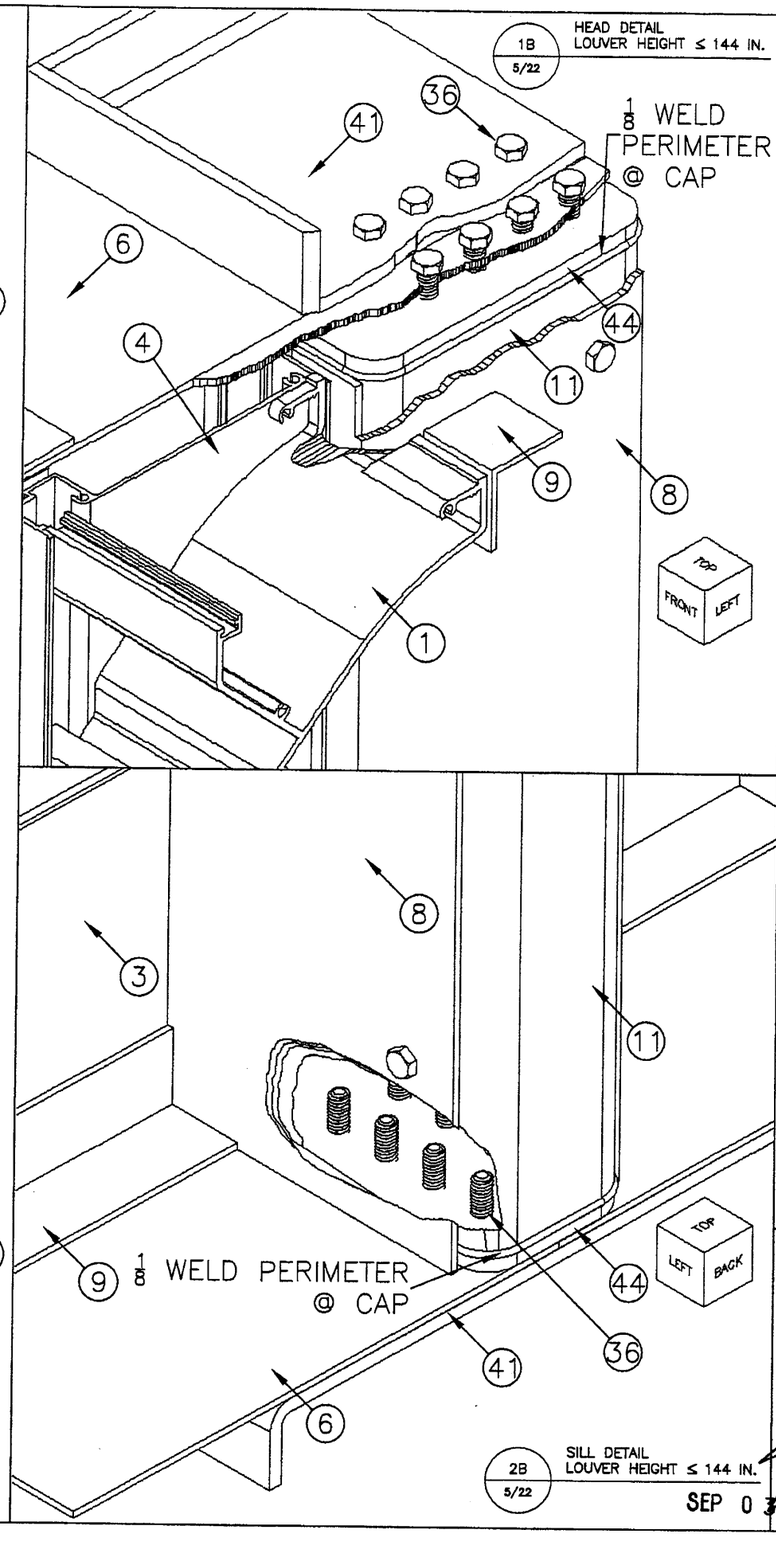


SEP 0 3 2010

DRAWN BY MES
DATE 8/25/2010
SCALE 1/2
SHEET NO. 5 OF 22
CAD DRAWING NO. ESD-635D

TITLE
ESD-635D LOUVER
FLANGE FRAME
SLEEVE MOUNT
HEAD & SILL DETAILS, H≤144"

GREENHECK
P.O.BOX 410 SCHOFIELD, WISCONSIN 54476-0410

RICE ENGINEERING
105 School Creek Trail
Luxemburg, WI 54217
Phone: 920.845.1042
Fax: 920.845.1048
www.rice-inc.com

Florida Firm No: F-01000005061
Certificate of Authorization: #9090
L. David Rice
Registration No: 50923

L. DAVID RICE LICENSE NO. 50923 STATE OF FLORIDA PROFESSIONAL ENGINEER

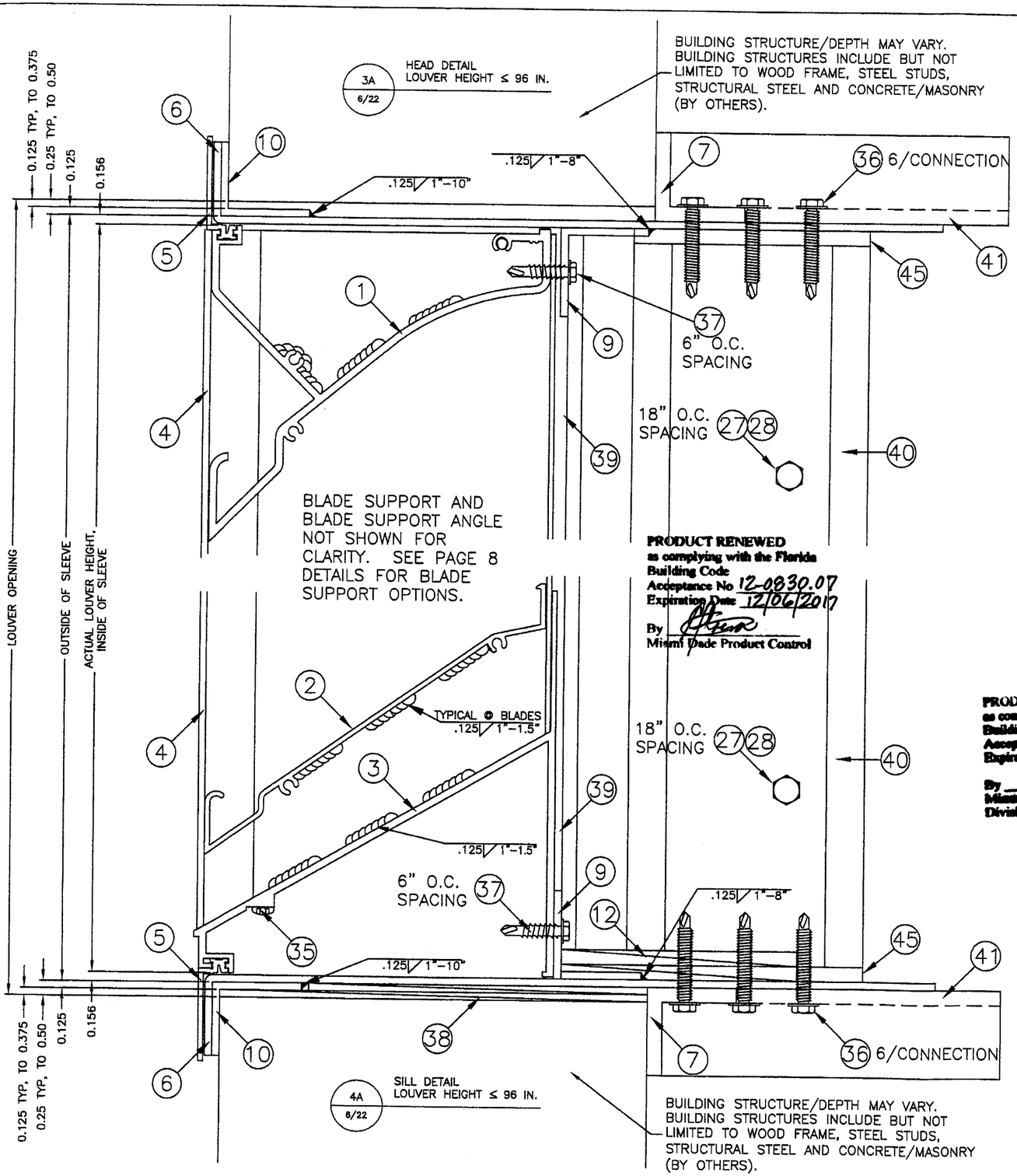


**PRODUCT RENEWED**
as complying with the Florida Building Code
Acceptance No 12-0830.07
Expiration Date 12/06/2017
By
Miami Dade Product Control

**PRODUCT REVISED**
as complying with the Florida Building Code
Acceptance No 10-0921.09
Expiration Date 12/06/2012
By
Miami Dade Product Control Division

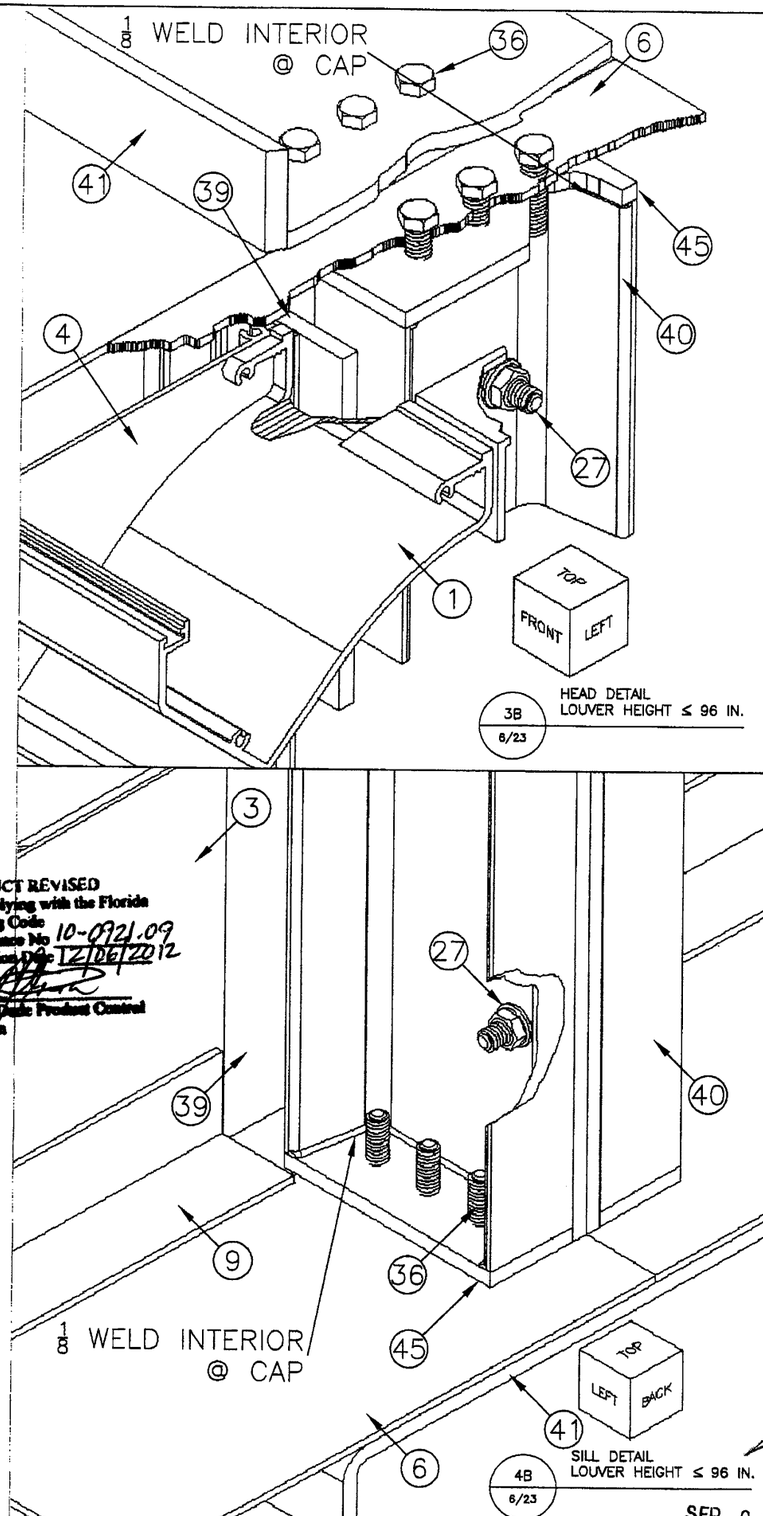


DRAWN BY MES | DATE 8/25/2010
SCALE 1/2 | SHEET NO. 6 OF 22
CAD DRAWING NO. ESD-635D

TITLE
ESD-635D LOUVER
FLANGE FRAME
SLEEVE MOUNT
HEAD & SILL DETAILS, H≤96"

GREENHECK
P.O.BOX 410 SCHOFIELD, WISCONSIN 54476-0410

RICE ENGINEERING
105 School Creek Trail
Luxemburg, WI 54217
Phone: 920.845.1042
Fax: 920.845.1048
www.rice-inc.com

Florida Firm No: F-01000005061
Certificate of Authorization: #9090
L. David Rice
Registration No: 50923

L. DAVID RICE LICENSE No. 50923 STATE OF FLORIDA PROFESSIONAL ENGINEER

SEP 03 2010

MULLION DIRECT MOUNT (SHOWN HERE AT HEAD) IS FOR SUBSTRATES WHERE MINIMUM FASTENER EDGE DISTANCE **CAN** BE ACHIEVED BY USE OF HOLES IN THE MULLION END CAP. DETAIL IS TYPICAL FOR BOTH HEAD AND SILL CONDITIONS WHEN APPLICABLE.

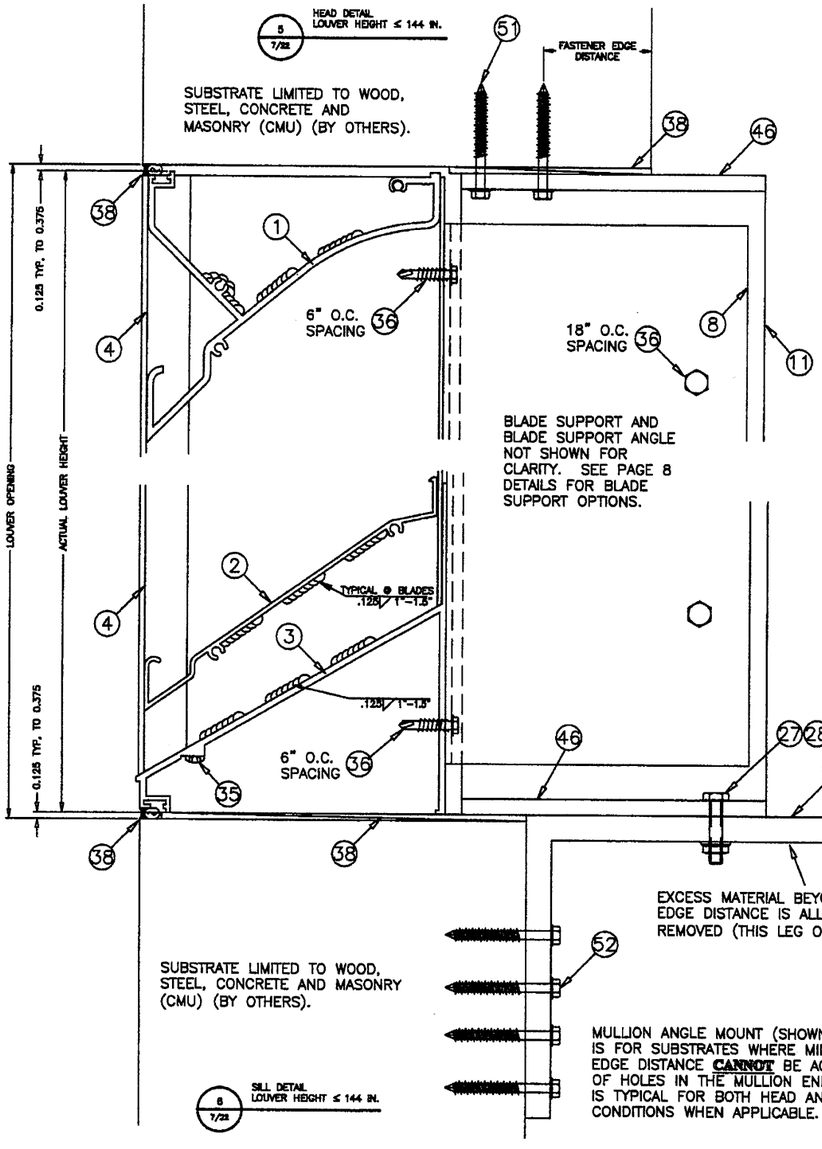


MULLION DIRECT MOUNT (SHOWN HERE AT HEAD) IS FOR SUBSTRATES WHERE MINIMUM FASTENER EDGE DISTANCE **CAN** BE ACHIEVED BY USE OF HOLES IN THE MULLION END CAP. DETAIL IS TYPICAL FOR BOTH HEAD AND SILL CONDITIONS WHEN APPLICABLE.

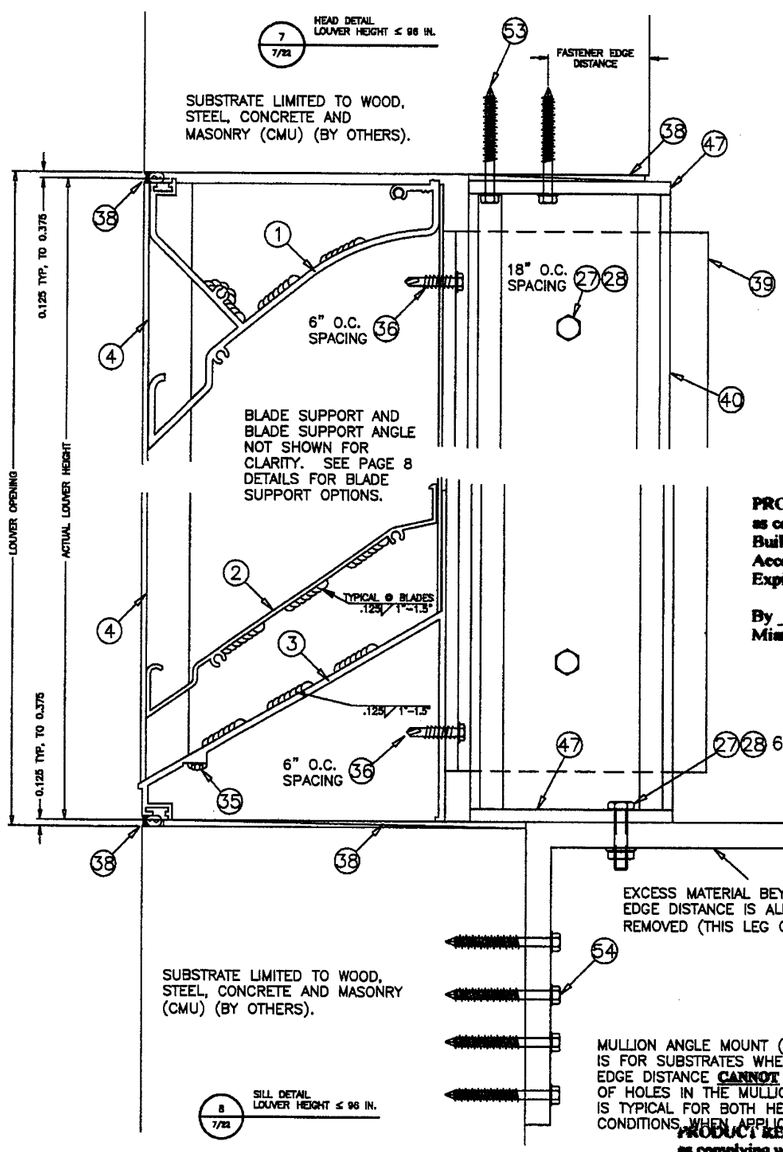


**PRODUCT RENEWED**
**as complying with the Florida Building Code**
**Acceptance No** 12-0830.07
**Expiration Date** 12/06/2017
**By**
**Miami Dade Product Control**

**PRODUCT REVISED**
**as complying with the Florida Building Code**
**Acceptance No** 10-0921.09
**Expiration Date** 12/06/2012
**By**
**Miami Dade Product Control Division**

SEP 0 3 2010


GREENHECK
P.O.BOX 410 SCHOFIELD, WISCONSIN 54476-0410


DRAWN BY MES | DATE 8/25/2010
SCALE 1/3 | SHEET NO. 7 OF 22
CAD DRAWING NO. ESD-635D

TITLE
ESD-635D LOUVER
CONTINUOUS ANGLE MOUNT
HEAD & SILL DETAILS, H≤144"
HEAD & SILL DETAILS, H≤96"


**RICE ENGINEERING**
105 School Creek Trail
Luxemburg, WI 54217
Phone: 920.845.1042
Fax: 920.845.1048
www.rice-inc.com

Florida Firm No: F-01000005061
Certificate of Authorization: #9090
L. David Rice
Registration No: 50923


L. DAVID RICE LICENSE No. 50923 STATE OF FLORIDA PROFESSIONAL ENGINEER

TYPICALLY, ONLY ONE BLADE BRACKET TYPE (ITEMS 13 & 43) IS USED ON THE ASSEMBLY. BOTH STYLES ARE SHOWN HERE TO SHOW DIFFERENCES.

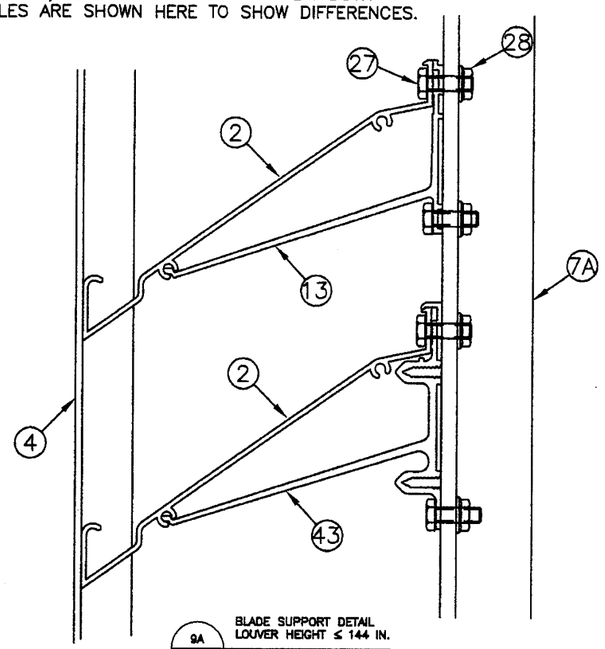


9A 8/22 BLADE SUPPORT DETAIL LOUVER HEIGHT ≤ 144 IN.

TYPICALLY, ONLY ONE BLADE BRACKET TYPE (ITEMS 13 & 43) IS USED ON THE ASSEMBLY. BOTH STYLES ARE SHOWN HERE TO SHOW DIFFERENCES.

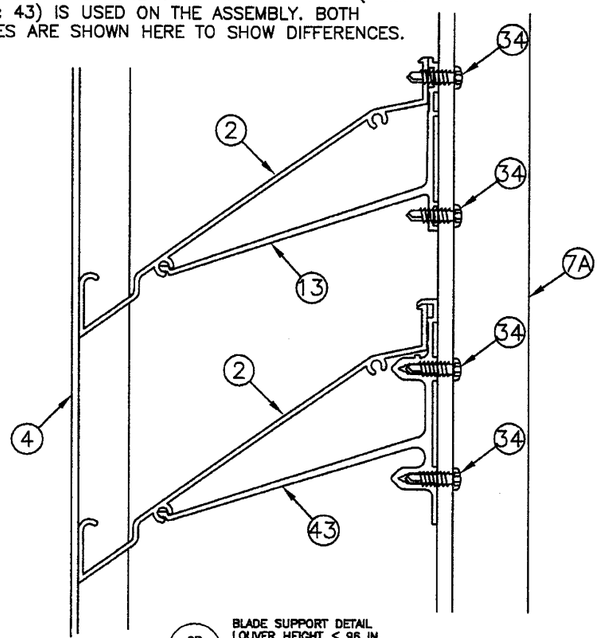


9B 8/22 BLADE SUPPORT DETAIL LOUVER HEIGHT ≤ 96 IN.

BRACKET IS ATTACHED TO SUPPORT ANGLE IN TYPICAL STYLE AS SHOWN IN DETAIL 9.

BLADE/BRACKET IS ATTACHED TO THE BLADE SUPPORT ANGLE

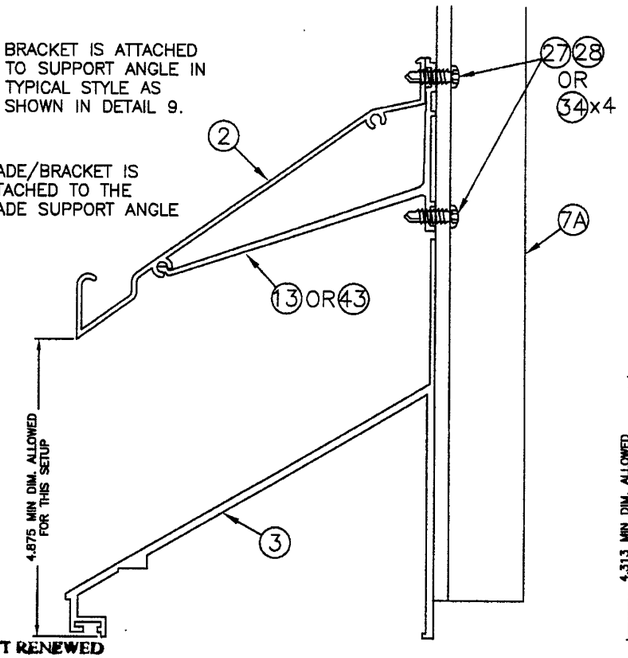


PRODUCT RENEWED
as complying with the Florida Building Code
Acceptance No 12-0830.07
Expiration Date 12/06/2017
By
Miami Dade Product Control

BLADE/BRACKET IS ATTACHED TO THE BLADE SUPPORT ANGLE

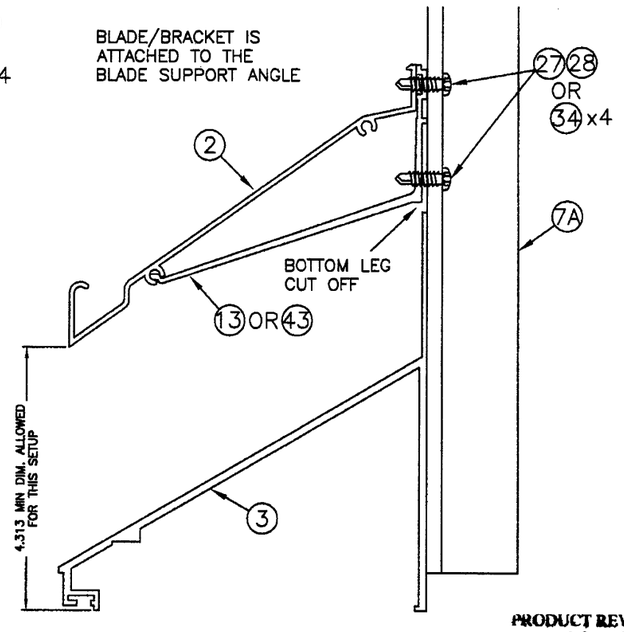


PRODUCT REVISED
as complying with the Florida Building Code
Acceptance No 10-0921.09
Expiration Date 12/06/2012
By
Miami Dade Product Control Division

NOTE: THE BLADE SUPPORT ANGLE (ITEM 7A) IS NOT SHOWN IN THE BOTTOM THREE DETAILS IN ORDER TO IMPROVE DETAIL CLARITY. THE BLADE SUPPORT ANGLE IS NOT ATTACHED TO THE BLADE SUPPORT BRACKET (ITEM 13 OR 43) IN THE BOTTOM THREE DETAILS AS THE BRACKET IS ATTACHED TO THE SILL INSTEAD. BLADE SUPPORT BRACKET ITEM 43 CAN REPLACE BLADE SUPPORT BRACKET 13 (SHOWN) IN ANY OF THE DRAWINGS FOR DETAIL 10.

BLADE/BRACKET IS ATTACHED TO THE SILL ONLY.

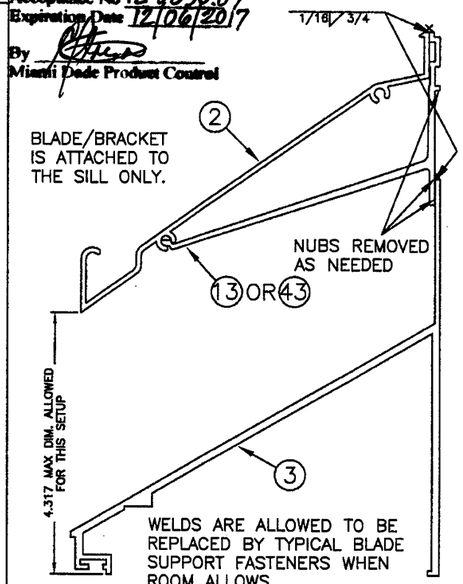


WELDS ARE ALLOWED TO BE REPLACED BY TYPICAL BLADE SUPPORT FASTENERS WHEN ROOM ALLOWS.

BLADE/BRACKET IS ATTACHED TO THE SILL ONLY.

BRACKET CUT SHORT

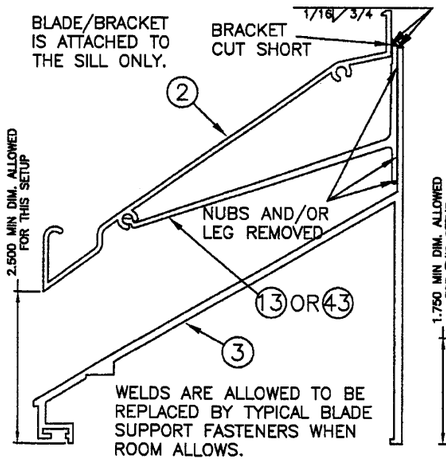


WELDS ARE ALLOWED TO BE REPLACED BY TYPICAL BLADE SUPPORT FASTENERS WHEN ROOM ALLOWS.

BLADE/BRACKET IS ATTACHED TO THE SILL ONLY.

BRACKET CUT SHORT

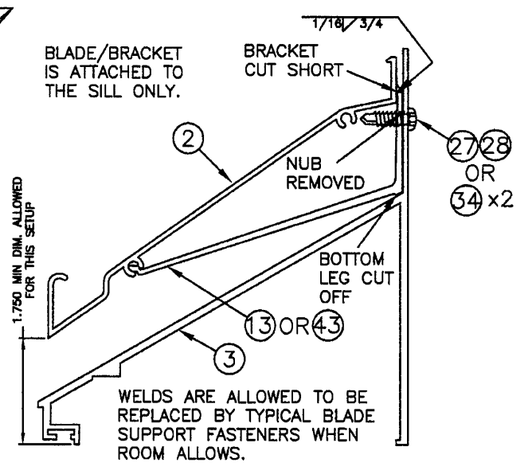


WELDS ARE ALLOWED TO BE REPLACED BY TYPICAL BLADE SUPPORT FASTENERS WHEN ROOM ALLOWS.

10 8/22 BOTTOM BLADE SUPPORT DETAIL LOUVER HEIGHT ≤ 144 IN.

SEP 03 2010

DRAWN BY MES | DATE 8/25/2010
SCALE 1/2.5 | SHEET NO. 8 OF 22
CAD DRAWING NO. ESD-635D

TITLE ESD-635D LOUVER BLADE SUPPORT DETAILS


GREENHECK
P.O.BOX 410 SCHOFIELD, WISCONSIN 54476-0410

RICE ENGINEERING
105 School Creek Trail
Luxemburg, WI 54217
Phone: 920.845.1042
Fax: 920.845.1048
www.rice-inc.com

Florida Firm No: F-01000005061
Certificate of Authorization: #9090
L. David Rice
Registration No: 50923


L. DAVID RICE LICENSE No. 50923 STATE OF FLORIDA PROFESSIONAL ENGINEER

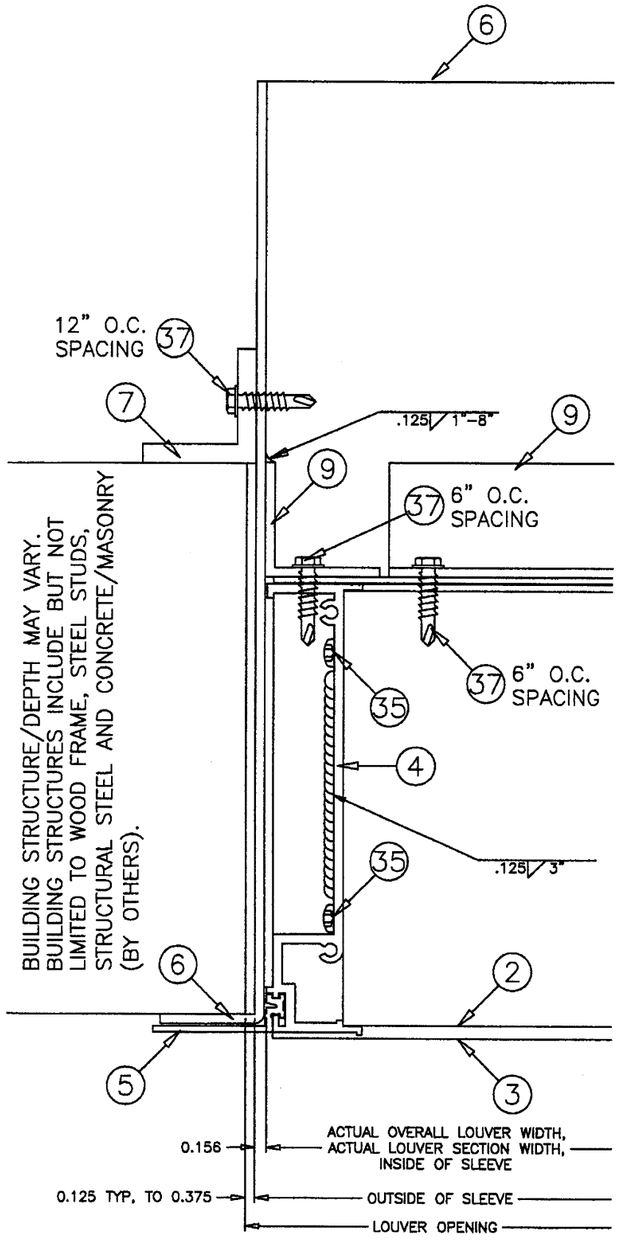


11 9/22 JAMB DETAIL

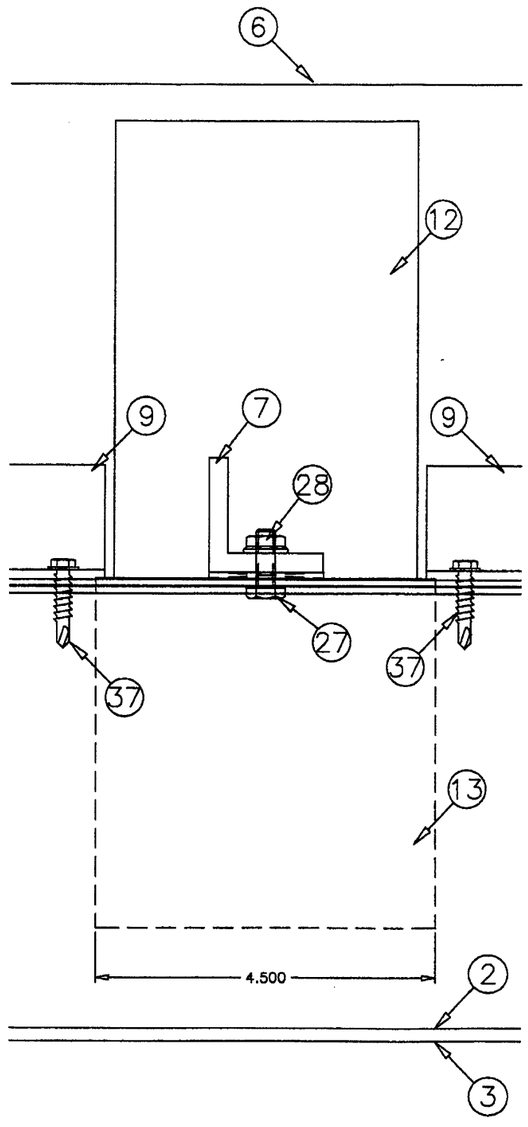


12A 9/22 SUPPORT DETAIL LOUVER HEIGHT ≤ 144 IN.

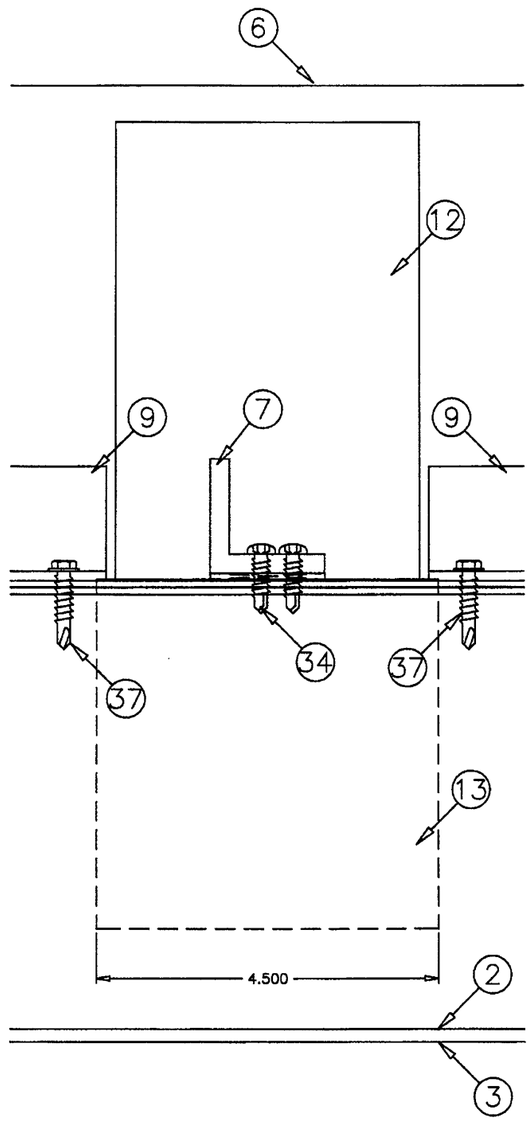


12B 9/22 SUPPORT DETAIL LOUVER HEIGHT ≤ 96 IN.

**PRODUCT RENEWED**
as complying with the Florida Building Code
Acceptance No 12-0830.07
Expiration Date 12/06/2017
By
Miami Dade Product Control

**PRODUCT REVISED**
as complying with the Florida Building Code
Acceptance No 10-0921.09
Expiration Date 12/06/2012
By
Miami Dade Product Control Division

DRAWN BY MES | DATE 8/25/2010
SCALE 1/2 | SHEET NO. 9 OF 22
CAD DRAWING NO. ESD-635D

GREENHECK
P.O.BOX 410 SCHOFIELD, WISCONSIN 54476-0410

TITLE
ESD-635D LOUVER
FLANGE FRAME
SLEEVE MOUNT
JAMB DETAILS

**RICE ENGINEERING**
105 School Creek Trail
Luxemburg, WI 54217
Phone: 920.845.1042
Fax: 920.845.1048
www.rice-inc.com

Florida Firm No: F-01000005061
Certificate of Authorization: #9090
L. David Rice
Registration No: 50923

L. DAVID RICE LICENSE No. 50923 STATE OF FLORIDA PROFESSIONAL ENGINEER

SEP 03 2010

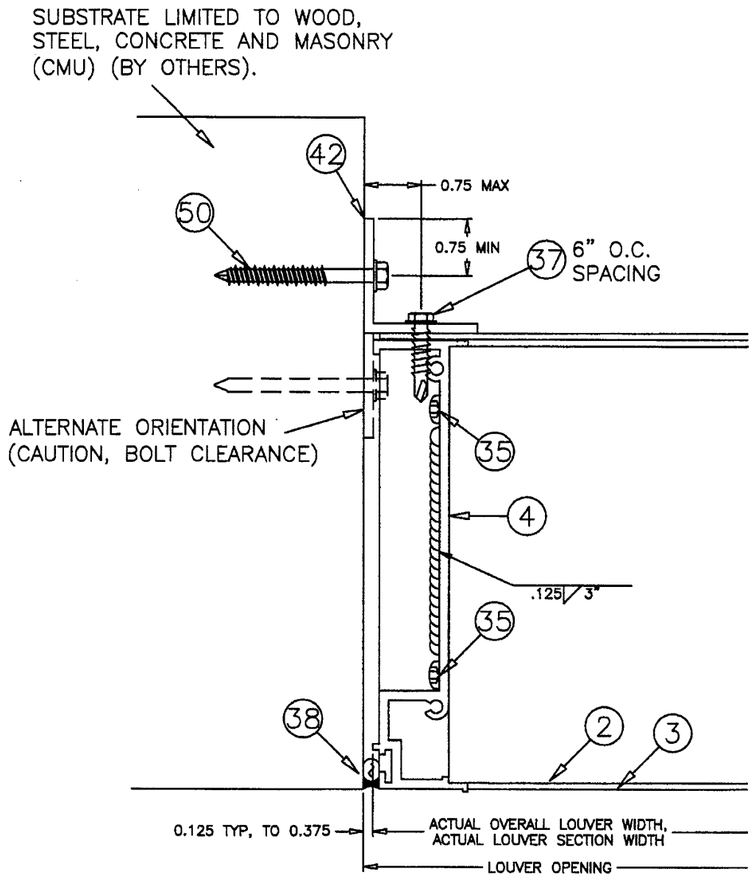


13 / 10/22 JAMB DETAIL LOUVER HEIGHT ≤ 144 IN.

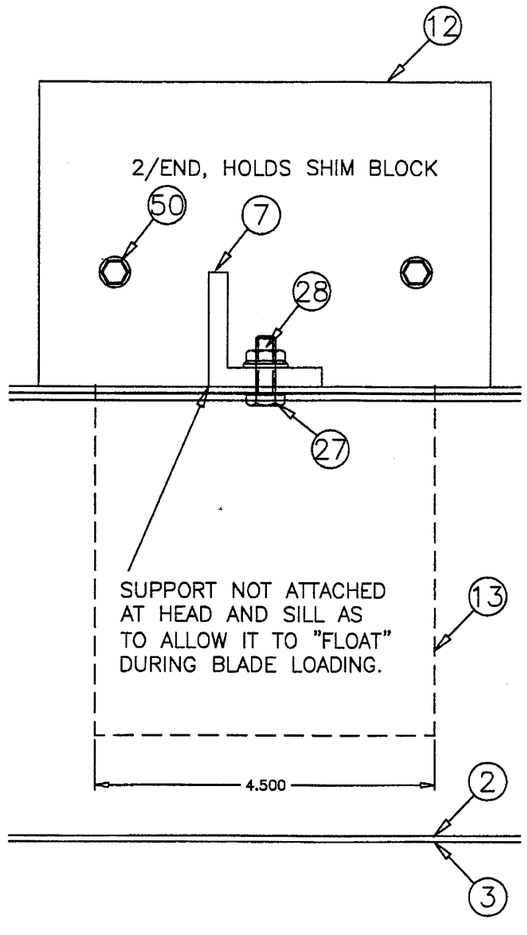


14A / 10/22 SUPPORT DETAIL LOUVER HEIGHT ≤ 144 IN.

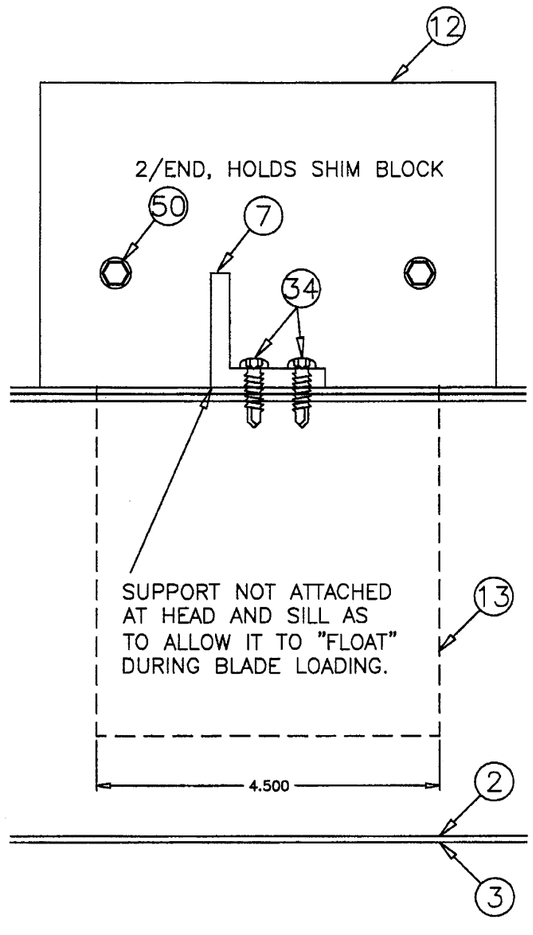


14B / 10/22 SUPPORT DETAIL LOUVER HEIGHT ≤ 96 IN.

**PRODUCT RENEWED**
as complying with the Florida Building Code
Acceptance No 12-0830.07
Expiration Date 12/06/2017
By
Miami Dade Product Control

**PRODUCT REVISED**
as complying with the Florida Building Code
Acceptance No 10-0922.09
Expiration Date 12/06/2012
By
Miami Dade Product Control Division

SEP 03 2010

DRAWN BY MES | DATE 8/25/2010
SCALE 1/2 | SHEET NO. 10 OF 22
CAD DRAWING NO. ESD-635D

GREENHECK
P.O.BOX 410 SCHOFIELD, WISCONSIN 54476-0410

TITLE
ESD-635D LOUVER
CONTINUOUS ANGLE MOUNT
JAMB DETAILS

**RICE ENGINEERING**
105 School Creek Trail
Luxemburg, WI 54217
Phone: 920.845.1042
Fax: 920.845.1048
www.rice-inc.com

Florida Firm No: F-01000005061
Certificate of Authorization: #9090
L. David Rice
Registration No: 50923

L. DAVID RICE LICENSED No. 50923 STATE OF FLORIDA PROFESSIONAL ENGINEER

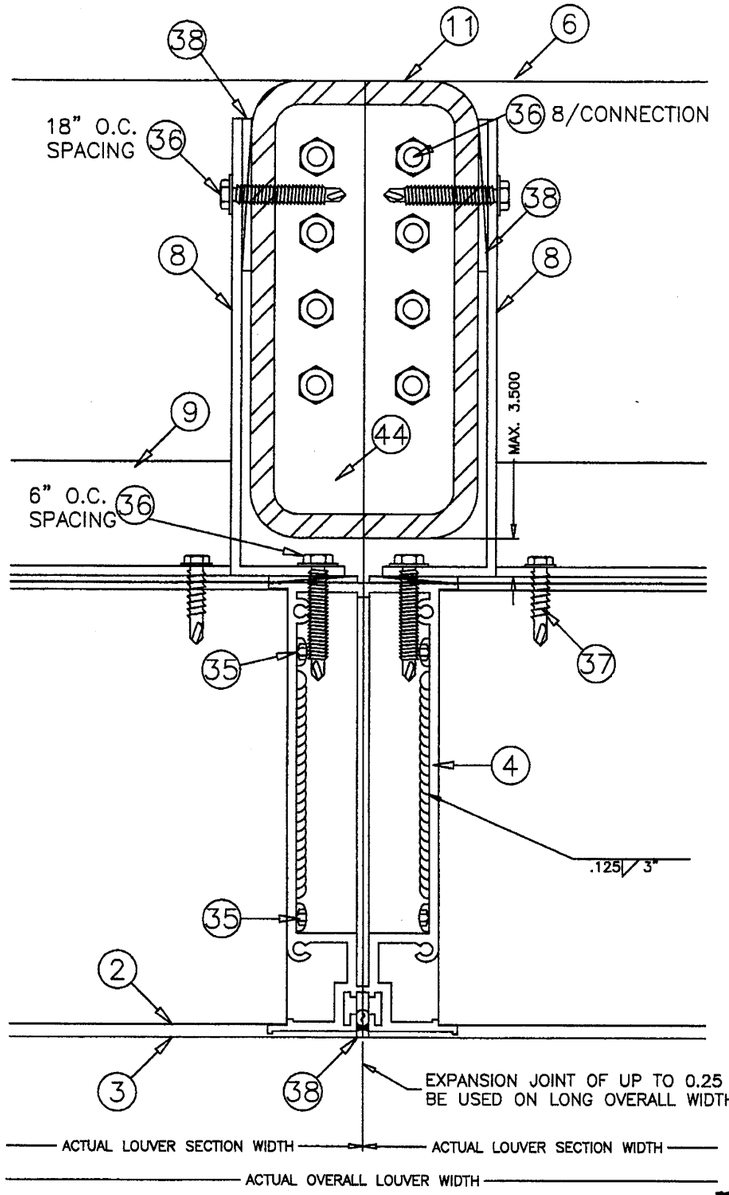


15A 11/22 MULLION DETAIL
LOUVER HEIGHT ≤ 144 IN.

**PRODUCT RENEWED**
**as complying with the Florida Building Code**
**Acceptance No** 12-0830.07
**Expiration Date** 12/06/2017
**By** _____
**Miami Dade Product Control**

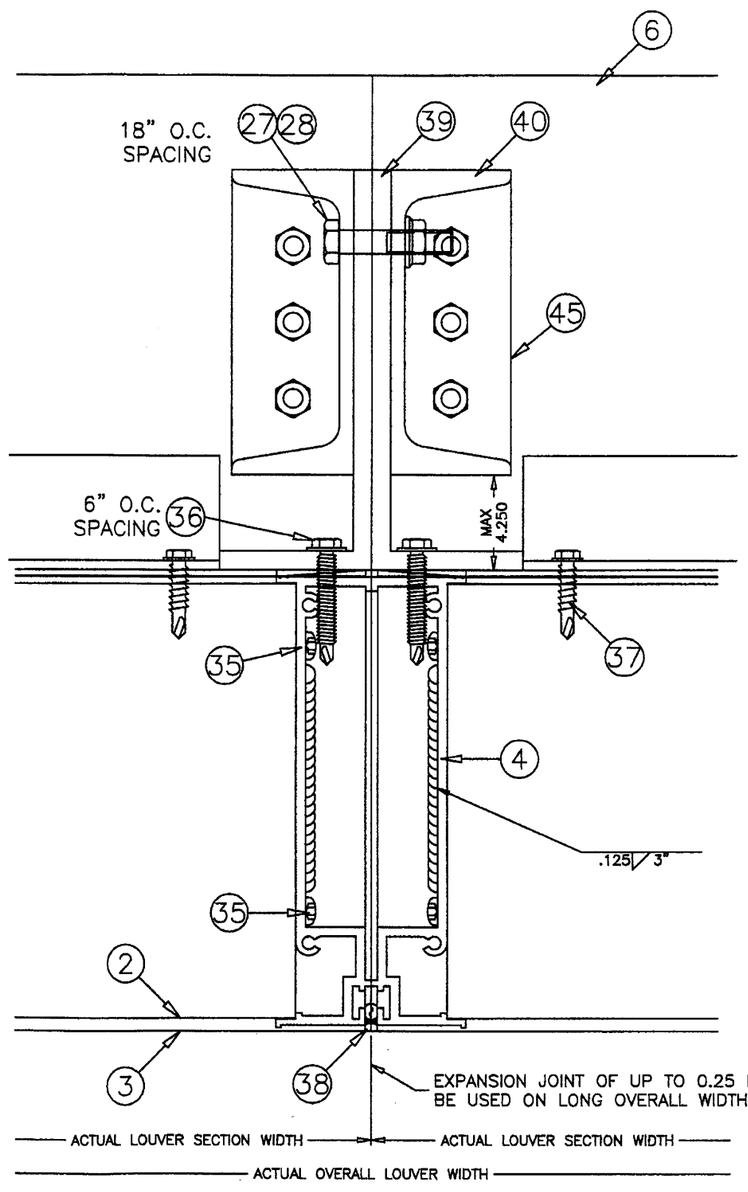


15B 11/22 MULLION DETAIL
LOUVER HEIGHT ≤ 96 IN.

**PRODUCT REVISED**
**as complying with the Florida Building Code**
**Acceptance No** 10-0921.09
**Expiration Date** 12/06/2012
**By** _____
**Miami Dade Product Control Division**

SEP 0 3 2010

DRAWN BY MES | DATE 8/25/2010
SCALE 1/2 | SHEET NO. 11 OF 22
CAD DRAWING NO. ESD-635D

TITLE
ESD-635D LOUVER
FLANGE FRAME
SLEEVE MOUNT
MULLION DETAILS

GREENHECK
P.O.BOX 410 SCHOFIELD,
WISCONSIN 54476-0410

RICE
ENGINEERING
105 School Creek Trail
Luxemburg, WI 54217
Phone: 920.845.1042
Fax: 920.845.1048
www.rice-inc.com

Florida Firm No: F-01000005061
Certificate of Authorization: #9090
L. David Rice
Registration No: 50923

L. DAVID RICE
LICENSED
No. 50923
STATE OF FLORIDA
PROFESSIONAL ENGINEER

MULLION DIRECT MOUNT (SHOWN HERE AT HEAD) IS FOR SUBSTRATES WHERE MINIMUM FASTENER EDGE DISTANCE **CAN** BE ACHIEVED BY USE OF HOLES IN THE MULLION END CAP. DETAIL IS TYPICAL FOR BOTH HEAD AND SILL CONDITIONS WHEN APPLICABLE.

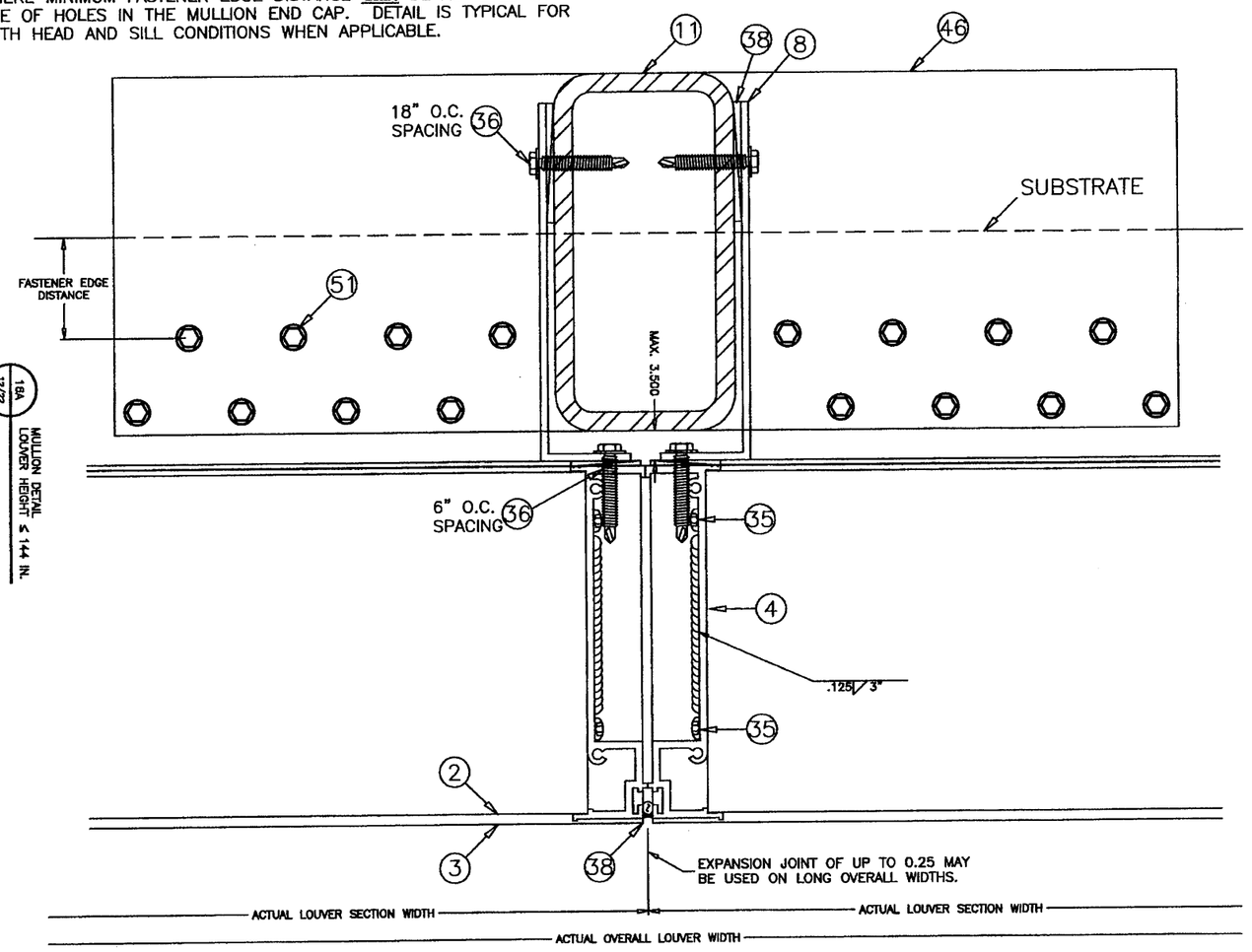


18A 12/22 MULLION DETAIL LOUVER HEIGHT ≤ 144 IN.

MULLION ANGLE MOUNT (SHOWN HERE AT SILL) IS FOR SUBSTRATES WHERE MINIMUM FASTENER EDGE DISTANCE **CANNOT** BE ACHIEVED BY USE OF HOLES IN THE MULLION END CAP. DETAIL IS TYPICAL FOR BOTH HEAD AND SILL CONDITIONS WHEN APPLICABLE.

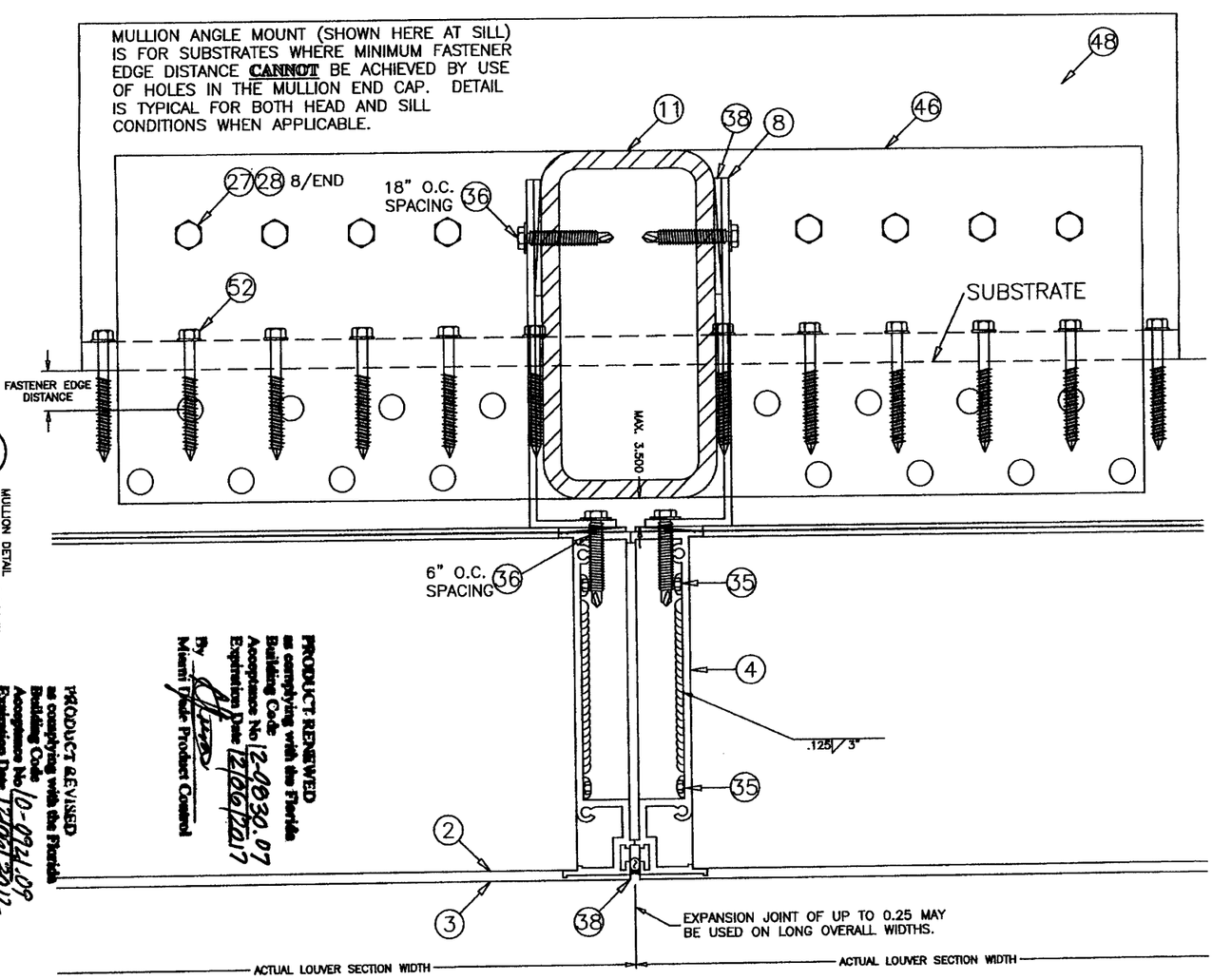


18B 12/22 MULLION DETAIL LOUVER HEIGHT ≤ 144 IN.

PRODUCT REVISED as complying with the Florida Building Code Acceptance No. 10-0324.09 Expiration Date 12/08/2012 By Miami Dade Product Control Division

PRODUCT RENEWED as complying with the Florida Building Code Acceptance No. 12-0830.07 Expiration Date 12/06/2017 By Miami Dade Product Control

SEP 03 2010

STATE OF FLORIDA L. DAVID RICE LICENSE No. 50923 PROFESSIONAL ENGINEER

RICE ENGINEERING
105 School Creek Trail
Luxemburg, WI 54217
Phone: 920.845.1042
Fax: 920.845.1048
www.rice-inc.com

Florida Firm No: F-01000005061
Certificate of Authorization: #9090
L. David Rice
Registration No: 50923

GREENHECK
P.O.BOX 410 SCHOFIELD, WISCONSIN 54476-0410

TITLE
ESD-635D LOUVER
CONTINUOUS ANGLE MOUNT
MULLION DETAILS, H≤144"

| DRAWN BY | DATE |
|---|---|
| MES | 8/25/2010 |
| SCALE | |
| 1/2.5 | |
| SHEET NO. | |
| 12 OF 22 | |
| CAD DRAWING NO. | |
| ESD-635D | |

MULLION DIRECT MOUNT (SHOWN HERE AT HEAD) IS FOR SUBSTRATES WHERE MINIMUM FASTENER EDGE DISTANCE **CAN** BE ACHIEVED BY USE OF HOLES IN THE MULLION END CAP. DETAIL IS TYPICAL FOR BOTH HEAD AND SILL CONDITIONS WHEN APPLICABLE.

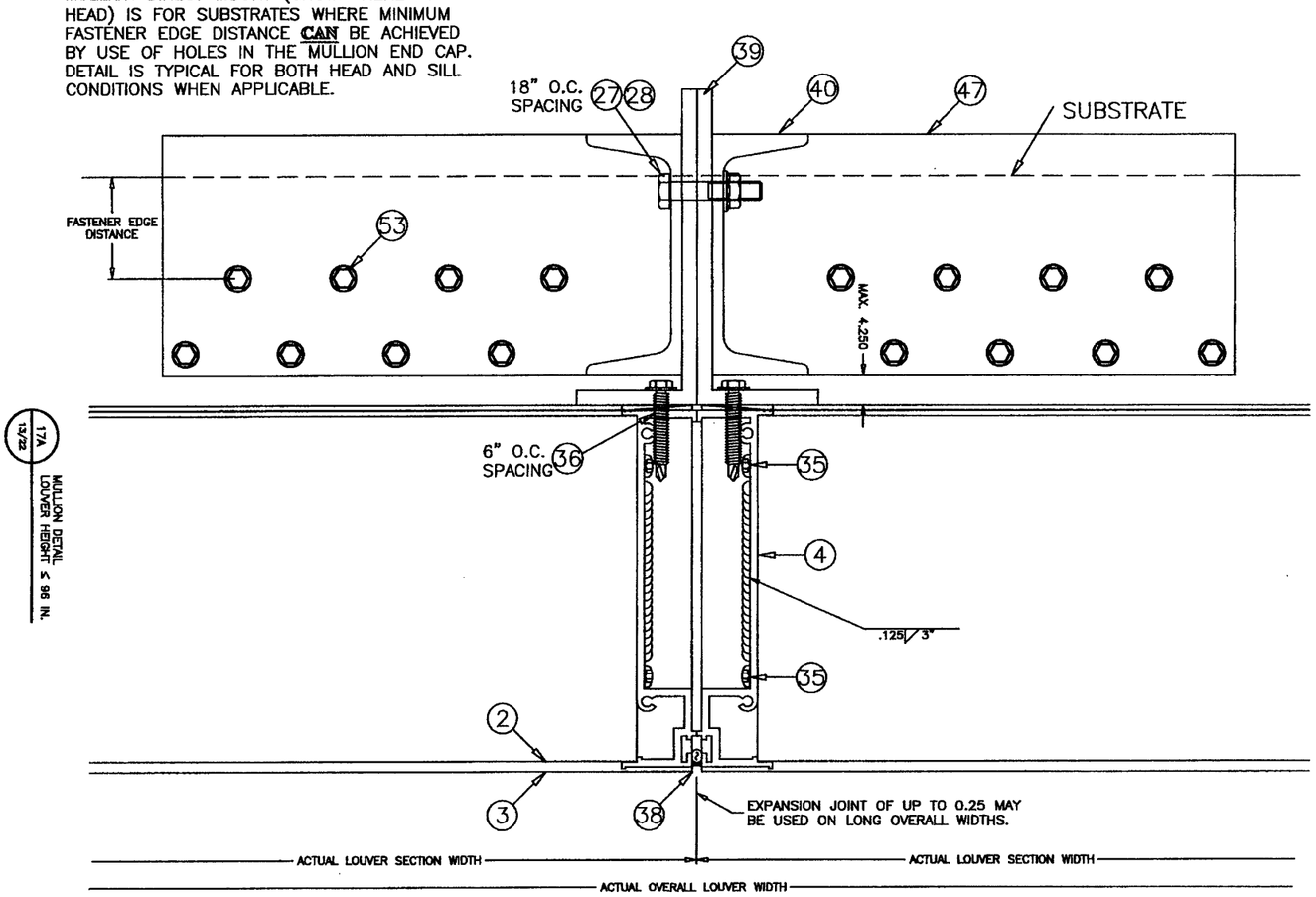


17A 13/22 MULLION DETAIL LOUVER HEIGHT ≤ 96 IN.

MULLION ANGLE MOUNT (SHOWN HERE AT SILL) IS FOR SUBSTRATES WHERE MINIMUM FASTENER EDGE DISTANCE **CANNOT** BE ACHIEVED BY USE OF HOLES IN THE MULLION END CAP. DETAIL IS TYPICAL FOR BOTH HEAD AND SILL CONDITIONS WHEN APPLICABLE.

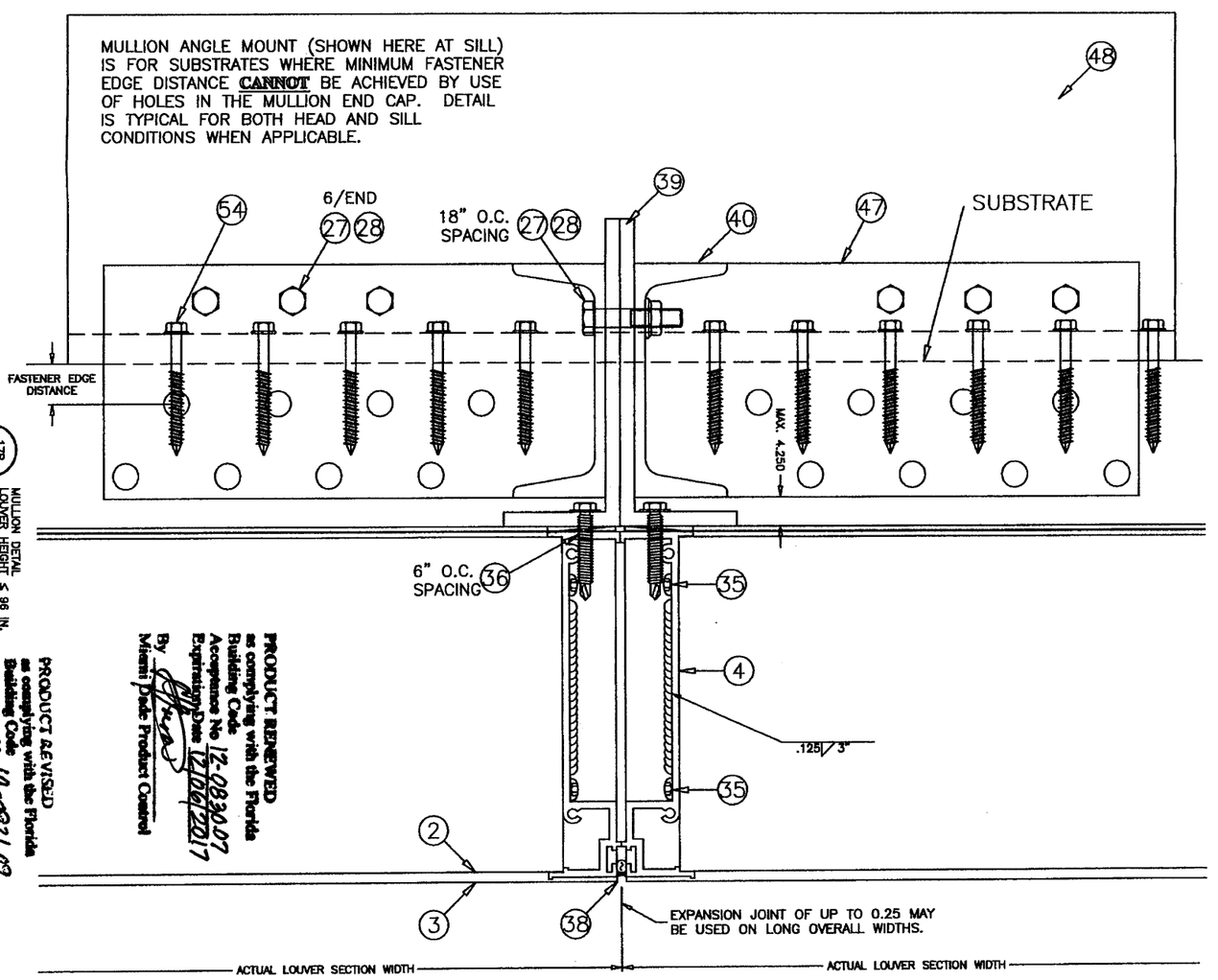


17B 13/22 MULLION DETAIL LOUVER HEIGHT ≤ 96 IN.

PRODUCT REVISED as complying with the Florida Building Code Acceptance No 12-0221.09 Expiration Date 12/06/2012
By Miami-Dade Product Control Division

PRODUCT RENEWED as complying with the Florida Building Code Acceptance No 12-0824.07 Expiration Date 12/06/2017
By Miami-Dade Product Control

SEP 03 2010


RICE ENGINEERING
105 School Creek Trail
Luxemburg, WI 54217
Phone: 920.845.1042
Fax: 920.845.1048
www.rice-inc.com

Florida Firm No: F-01000005061
Certificate of Authorization: #9090
L. David Rice
Registration No: 50923

L. DAVID RICE
LICENSE
No. 50923
STATE OF FLORIDA
PROFESSIONAL ENGINEER


GREENHECK
P.O.BOX 410 SCHOFIELD, WISCONSIN 54476-0410

TITLE
ESD-635D LOUVER
CONTINUOUS ANGLE MOUNT

MULLION DETAILS, H≤96"

| | |
|---|---|
| DRAWN BY: MES | DATE: 8/25/2010 |
| SCALE: 1/2.5 | |
| SHEET NO.: 13 OF 22 | |
| CAD DRAWING NO.: ESD-635D | |

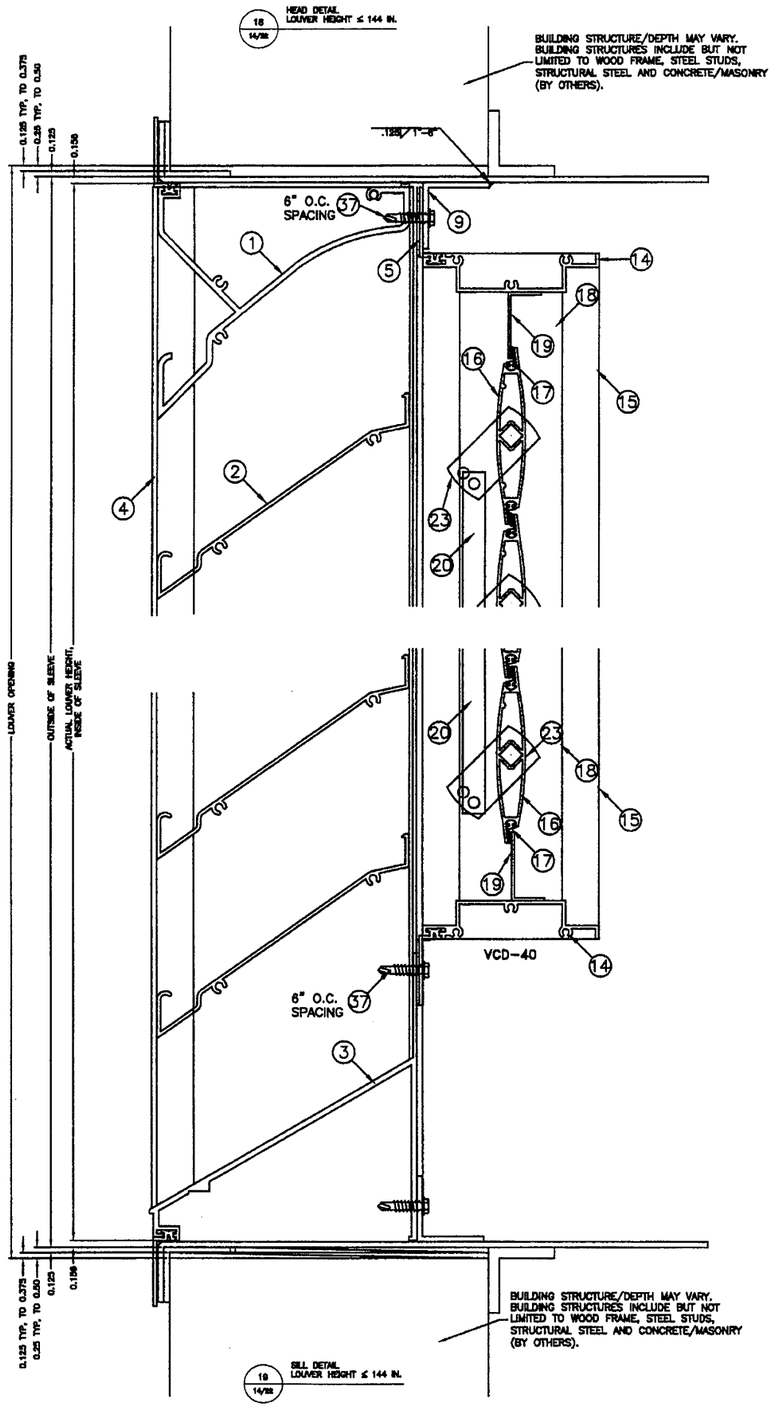


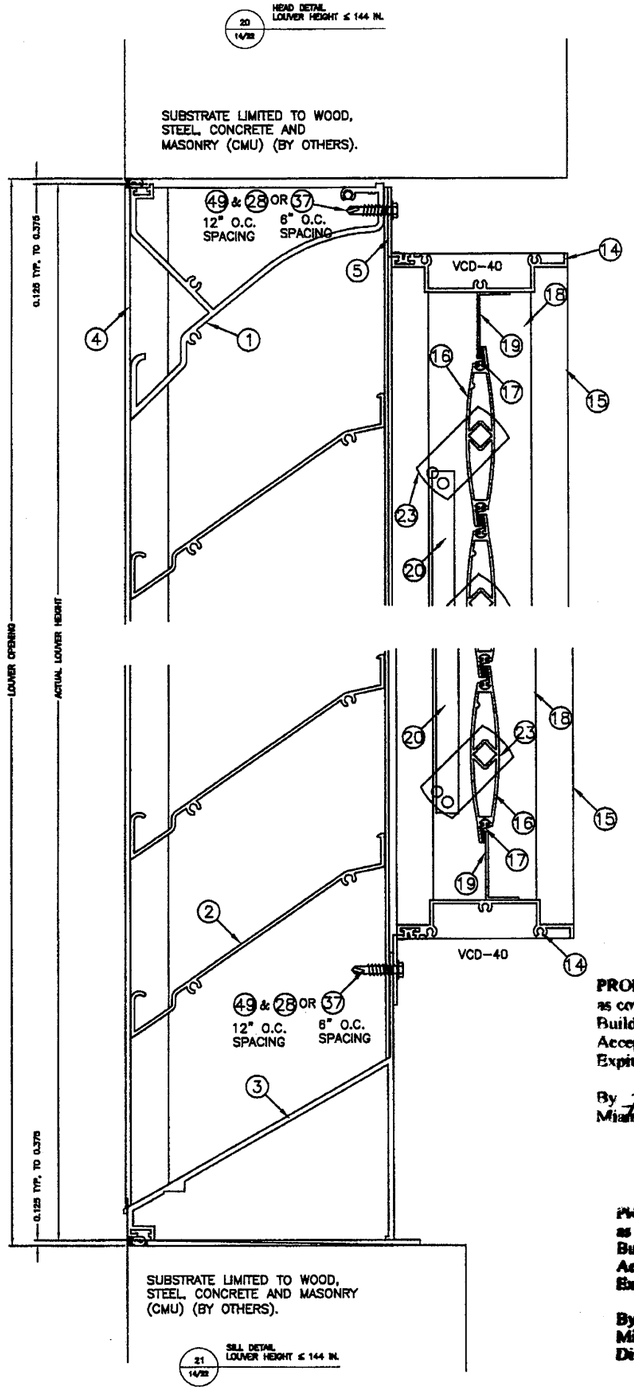


**PRODUCT RENEWED**
as complying with the Florida Building Code
Acceptance No 12-0930.07
Expiration Date 12/06/2017
By
Miami-Dade Product Control

**PRODUCT REVISED**
as complying with the Florida Building Code
Acceptance No 10-0921.09
Expiration Date 12/06/2012
By
Miami-Dade Product Control Division

SEP 03 2010

| | |
|---|---|
| DRAWN BY | MES |
| DATE | 8/25/2010 |
| SCALE | 1/3 |
| SHEET NO. | 14 OF 22 |
| CAD DRAWING NO. | ESD-635D |

TITLE
ESD-635D LOUVER W/VCD-40
FLANGE FRAME W/SLEEVE MOUNT,
& CONTINUOUS ANGLE MOUNT
HEAD & SILL DETAILS

GREENHECK
P.O.BOX 410 SCHOFIELD,
WISCONSIN 54476-0410

RICE
ENGINEERING
105 School Creek Trail
Luxemburg, WI 54217
Phone: 920.845.1042
Fax: 920.845.1048
www.rice-inc.com

Florida Firm No: F-01000005061
Certificate of Authorization: #9090
L. David Rice
Registration No: 50923

L. DAVID RICE
LICENSED
No. 50923
STATE OF FLORIDA
PROFESSIONAL ENGINEER

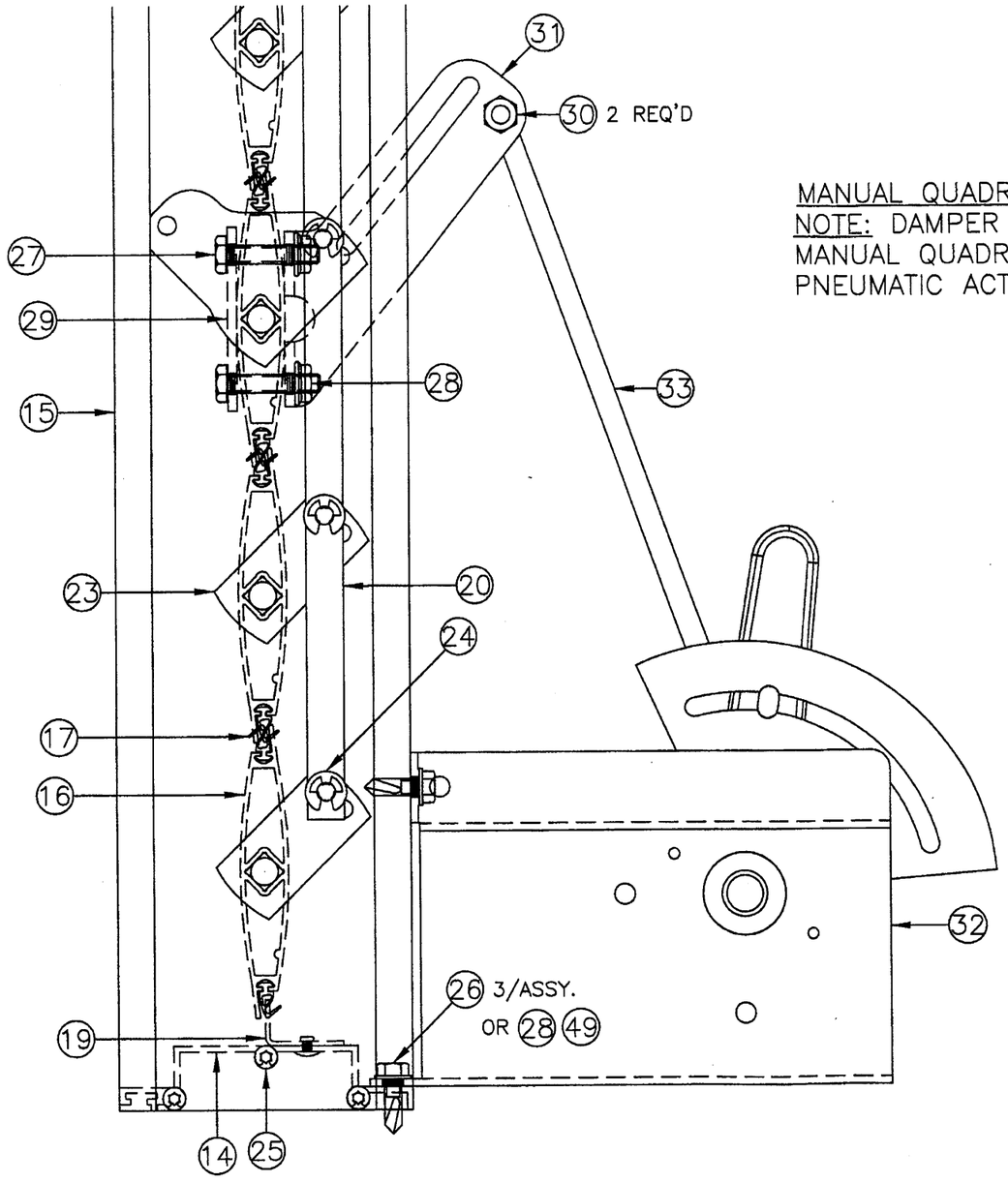


MANUAL QUADRANT ACTUATOR AS SHOWN
NOTE: DAMPER MAY BE OPERATED BY MANUAL QUADRANT, AN ELECTRIC OR PNEUMATIC ACTUATOR.

22
15/22
ACTUATOR DETAIL
LOUVER HEIGHT ≤ 144 IN.

**PRODUCT RENEWED**
as complying with the Florida Building Code
Acceptance No 12-0830.07
Expiration Date 12/06/2017
By
Miami Dade Product Control

**PRODUCT REVISED**
as complying with the Florida Building Code
Acceptance No 10-0921.09
Expiration Date 12/06/2012
By
Miami Dade Product Control Division

SEP 0 3 2010

GREENHECK
P.O.BOX 410 SCHOFIELD, WISCONSIN 54476-0410

DRAWN BY MES | DATE 8/25/2010
SCALE 1:2 | SHEET NO. 15 OF 22
CAD DRAWING NO. ESD-635D

TITLE VCD-40 DAMPER MANUAL QUAD ACTUATOR


**RICE ENGINEERING**
105 School Creek Trail
Luxemburg, WI 54217
Phone: 920.845.1042
Fax: 920.845.1048
www.rice-inc.com

Florida Firm No: F-01000005061
Certificate of Authorization: #9090
L. David Rice
Registration No: 50923


L. DAVID RICE LICENSE No. 50923 STATE OF FLORIDA PROFESSIONAL ENGINEER

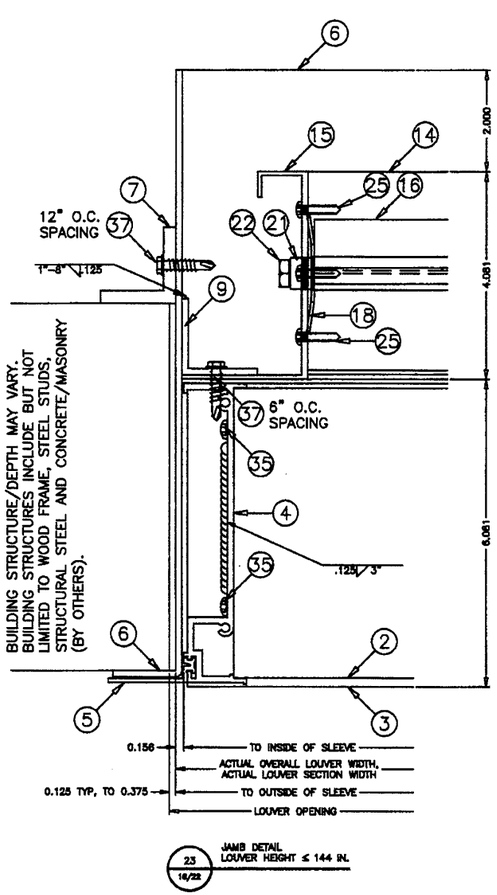


VCD-40

ESD-635D

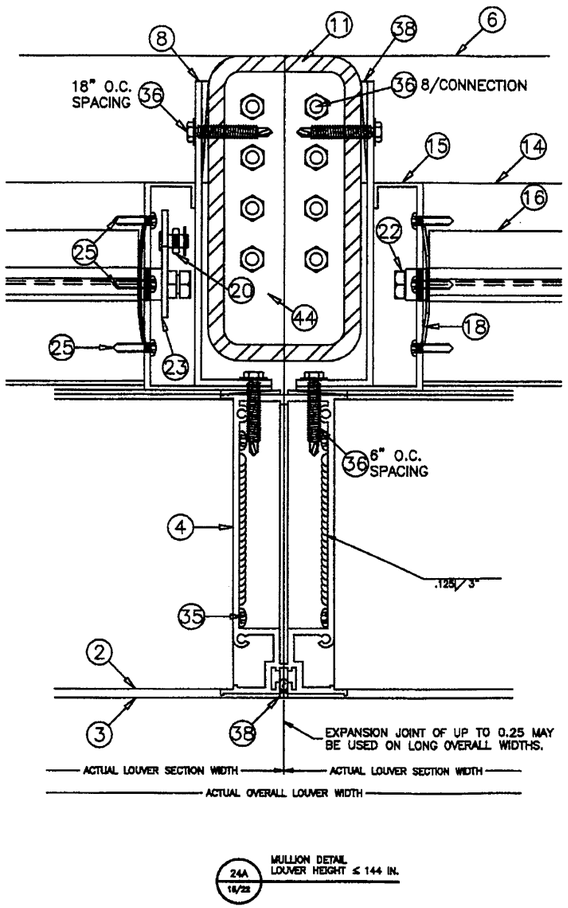


VCD-40

ESD-635D

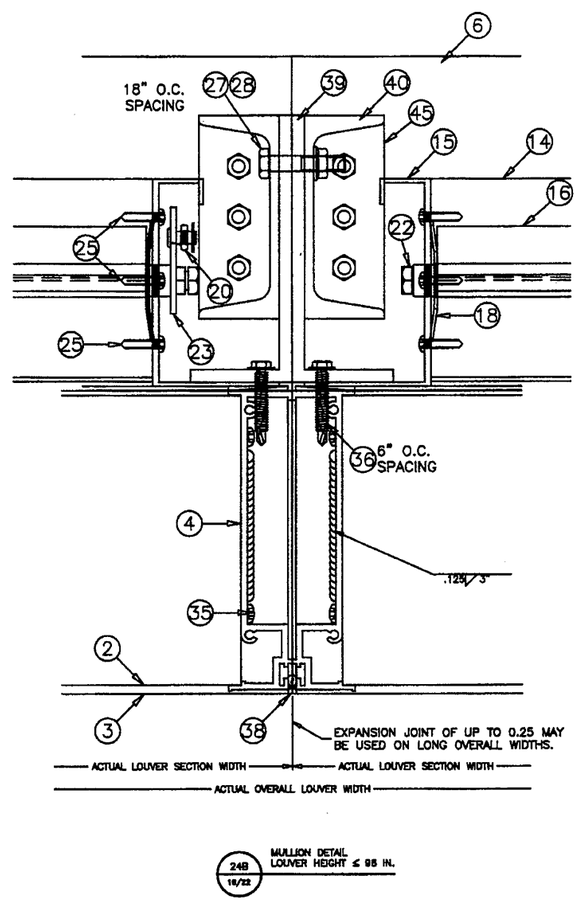


**PRODUCT RENEWED**
as complying with the Florida Building Code
Acceptance No 12-0830.07
Expiration Date 12/06/2017
By
Miami Dade Product Control

**PRODUCT REVISED**
as complying with the Florida Building Code
Acceptance No 10-0921.09
Expiration Date 12/06/2012
By
Miami Dade Product Control Division

SEP 03 2010

DRAWN BY MES | DATE 8/25/2010
SCALE 1/3 | SHEET NO. 16 OF 22
CAD DRAWING NO. ESD-635D

GREENHECK
P.O.BOX 410 SCHOFIELD, WISCONSIN 54476-0410

TITLE
ESD-635D LOUVER W/VCD-40
FLANGE FRAME
SLEEVE MOUNT
JAMB AND MULLION DETAILS

**RICE ENGINEERING**
105 School Creek Trail
Luxemburg, WI 54217
Phone: 920.845.1042
Fax: 920.845.1048
www.rice-inc.com

Florida Firm No: F-01000005061
Certificate of Authorization: #9090
L. David Rice
Registration No: 50923

L. DAVID RICE LICENSE No. 50923 STATE OF FLORIDA PROFESSIONAL ENGINEER

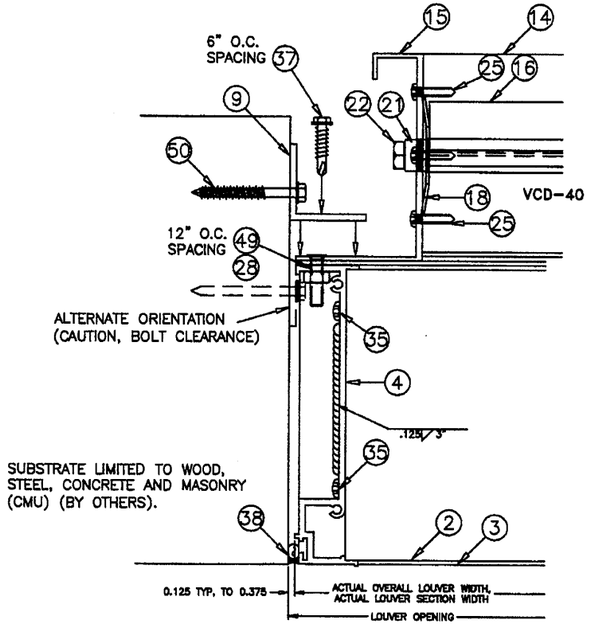


25 17/22 JAMB DETAIL LOUVER HEIGHT ≤ 144 IN.

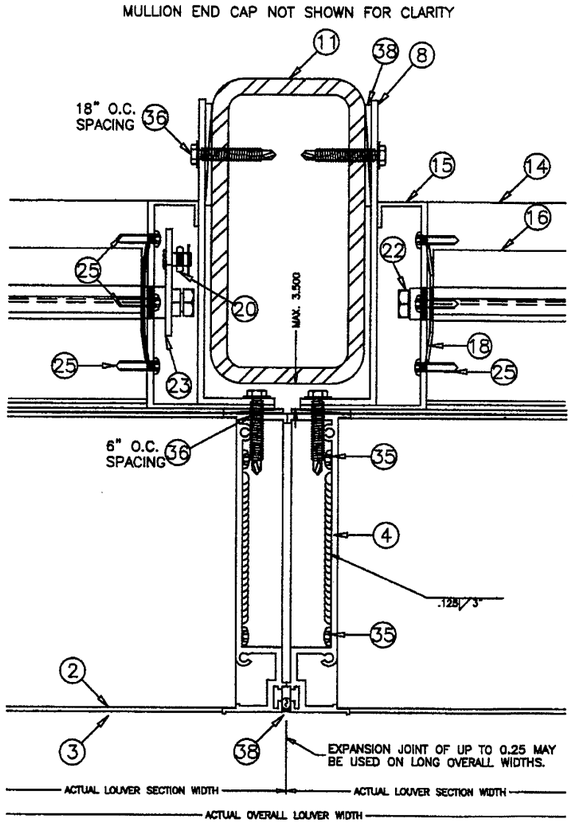


26A 17/22 MULLION DETAIL LOUVER HEIGHT ≤ 144 IN.

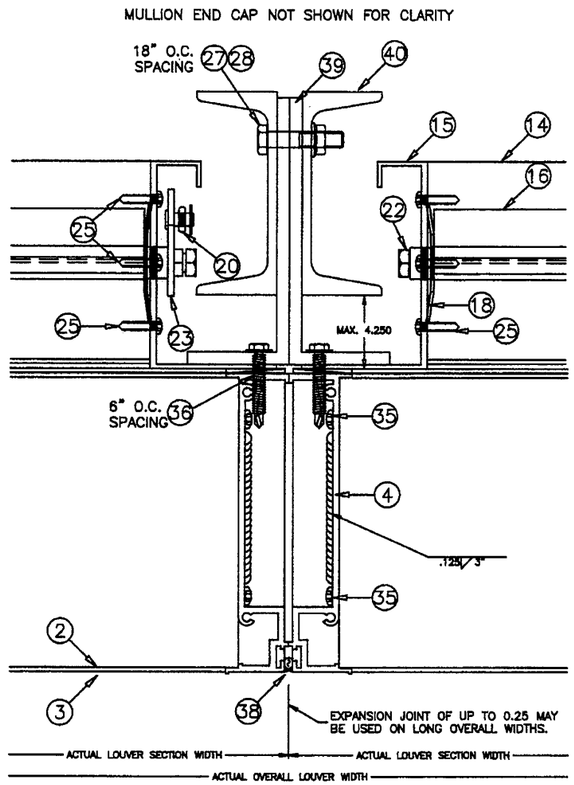


26B 17/22 MULLION DETAIL LOUVER HEIGHT ≤ 96 IN.

**PRODUCT RENEWED**
as complying with the Florida Building Code
Acceptance No 12-0830.07
Expiration Date 12/06/2017
By _____
Miami Dade Product Control

**PRODUCT REVISED**
as complying with the Florida Building Code
Acceptance No 10-0924.09
Expiration Date 12/06/2012
By _____
Miami Dade Product Control Division

SEP 0 3 2010

DRAWN BY MES | DATE 8/25/2010
SCALE 1/3 | SHEET NO. 17 OF 22
CAD DRAWING NO. ESD-635D

TITLE ESD-635D LOUVER W/VCD-40
CONTINUOUS ANGLE MOUNT
JAMB AND MULLION DETAILS

GREENHECK
P.O.BOX 410 SCHOFIELD, WISCONSIN 54476-0410

RICE ENGINEERING
105 School Creek Trail
Luxemburg, WI 54217
Phone: 920.845.1042
Fax: 920.845.1048
www.rice-inc.com

Florida Firm No: F-01000005061
Certificate of Authorization: #9090
L. David Rice
Registration No: 50923

L. DAVID RICE LICENSE No. 50923 STATE OF FLORIDA PROFESSIONAL ENGINEER

NOTES:

1. OTHER SHAPES MAY APPLY PROVIDING THEY ARE SIMILAR TO THOSE SHOWN AND HAVE CORNER CONSTRUCTION AS DESCRIBED ON ALL SHEETS.

2. ALL SHAPED LOUVER PANELS ARE RESTRICTED TO THE SAME PANEL WIDTH AND PRESSURE AS THE RECTANGULAR LOUVER PANELS AND MAY BE STACKED VERTICALLY AND HORIZONTALLY THE SAME AS THE RECTANGULAR PANELS.

3. WHEN SECTIONS EXCEED 36" IN LENGTH BLADE SUPPORT ANGLE AND BRACKETS ARE REQUIRED.

AVAILABLE SHAPES

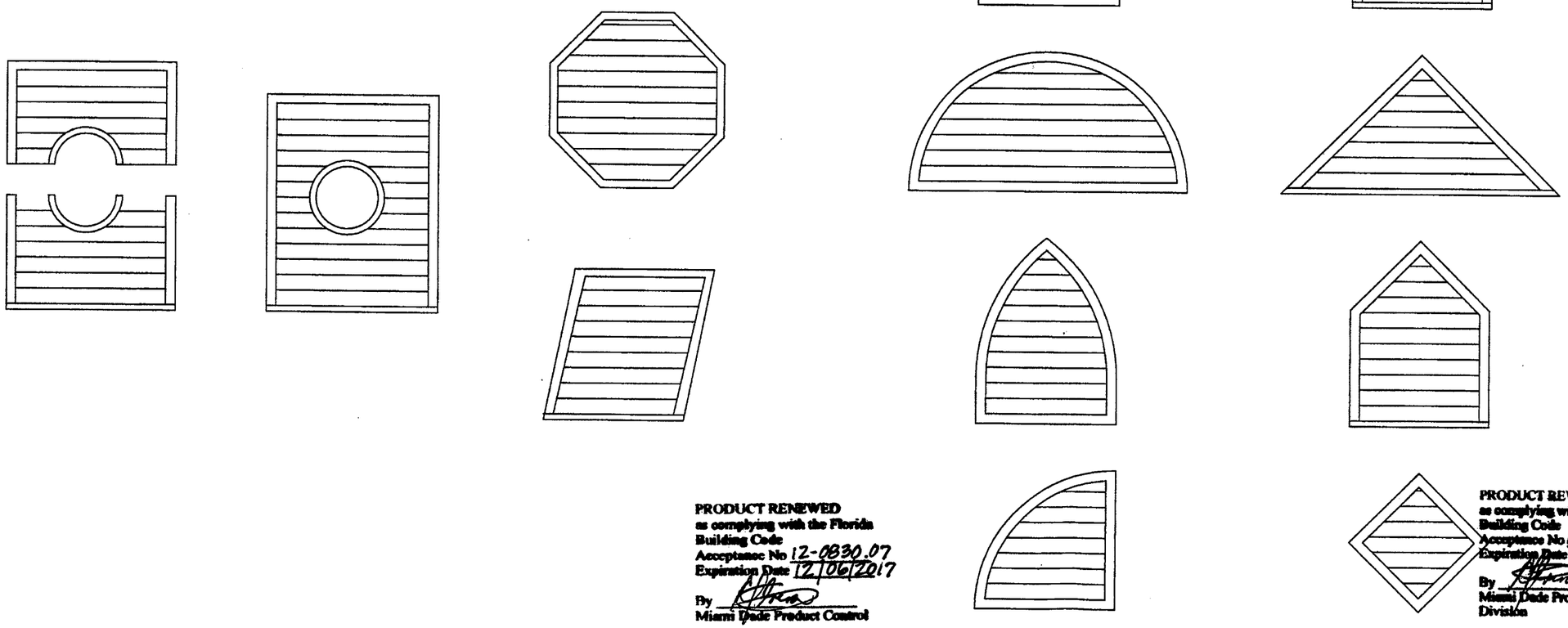

PRODUCT RENEWED
as complying with the Florida Building Code
Acceptance No 12-0830.07
Expiration Date 12/06/2017
By
Miami Dade Product Control

PRODUCT REVISED
as complying with the Florida Building Code
Acceptance No. 10-0921.09
Expiration Date 12/06/2012
By
Miami Dade Product Control Division

SEP 0 3 2010

GREENHECK
P.O.BOX 410 SCHOFIELD, WISCONSIN 54476-0410

DRAWN BY MES | DATE 8/25/2010
SCALE | SHEET NO. 18 OF 22
CAD DRAWING NO. ESD-635D

TITLE: ESD-635D LOUVER W/ AND W/O VCD-40 AVAILABLE SHAPES

RICE ENGINEERING
105 School Creek Trail
Luxemburg, WI 54217
Phone: 920.845.1042
Fax: 920.845.1048
www.rice-inc.com

Florida Firm No: F-01000005061
Certificate of Authorization: #9090
L. David Rice
Registration No: 50923

L. DAVID RICE LICENSE No. 50923 STATE OF FLORIDA PROFESSIONAL ENGINEER

*EMBEDMENT DEPTH IS EQUAL TO OVERALL FASTENER LENGTH FOR CONCRETE/CMU FASTENERS. IF SHIMS ARE USED, FASTENER LENGTH MUST BE INCREASED BY THICKNESS OF SHIMS.

| ITEM | DESCRIPTION | MATERIAL | NOTES |
|---|---|---|---|
| 1 | LOUVER HEAD | 6063-T5 ALUMINUM | |
| 2 | LOUVER BLADE | 6063-T5 ALUMINUM | 4.0625" MAX. SPACING |
| 3 | LOUVER SILL | 6063-T5 ALUMINUM | |
| 4 | LOUVER JAMB | 6063-T5 ALUMINUM | |
| 5 | LOUVER/DAMPER FLANGE | 6063-T5 ALUMINUM | |
| 6 | FORMED SLEEVE | 5052-H32 ALUMINUM | 1/8" FORMED SLEEVE - DEPTH VARIES |
| 7A | 1 1/2 X 1 1/2 X 1/4 ANGLE | 6063-T5 ALUMINUM | BLADE SUPPORT ANGLE |
| 7B | 1 1/2 X 1 1/2 X 1/4 ANGLE | 6063-T5 ALUMINUM | USED AT HEAD/SILL/JAMB OF SLEEVE |
| 8 | 1 1/2 X 6 X 1/8 ANGLE | 6063-T5 ALUMINUM | JAMB ANGLE |
| 9 | 1 1/2 X 1 1/2 X 1/8 ANGLE | 6063-T5 ALUMINUM | USED AT HEAD/SILL/JAMBS OF LOUVER |
| 10 | 1 1/2 X 1 1/2 X 1/8 ANGLE | 6063-T5 ALUMINUM | USED AT HEAD & SILL OF SLEEVE |
| 11 | 3 X 6 X 5/16 STEEL TUBE | A36 STEEL | SHIP LOOSE |
| 12 | 4 X 6 X 1/4 ALUM. SHIMS | 5052-H32 ALUMINUM | USED AT SILL FOR SUPPORT ANGLE |
| 13 | BLADE BRACKET | 6063-T5 ALUMINUM | 4.5" LONG |
| 14 | DAMPER HEAD/SILL | 6063-T5 ALUMINUM | |
| 15 | DAMPER JAMB | 6063-T5 ALUMINUM | |
| 16 | DAMPER BLADE | 6063-T5 ALUMINUM | 3.75 MAX. SPACING |
| 17 | DAMPER BLADE SEAL | SILICONE/RUBBER TYPE | MATERIAL VARIES |
| 18 | DAMPER JAMB SEAL | SS | |
| 19 | DAMPER TOP/BOTTOM CLOSURE | ALUMINUM | |
| 20A | DAMPER LINKAGE BAR | GALV. STEEL | |
| 20B | DAMPER LINKAGE BAR | SS | |
| 21A | DAMPER AXLE BUSHING | DELRIN | |
| 21B | DAMPER AXLE BUSHING | BRONZE | |
| 21C | DAMPER AXLE BUSHING | SS | |
| 22A | NON-DRIVE DAMPER AXLE ASST. | ZC STEEL PIN W/DELRIN BUSHING | |
| 22B | NON-DRIVE DAMPER AXLE ASST. | ZC STEEL PIN W/BRONZE BUSHING | |
| 22C | NON-DRIVE DAMPER AXLE ASST. | ZC STEEL PIN W/ SS BUSHING | |
| 22D | NON-DRIVE DAMPER AXLE ASST. | SS PIN W/ DELRIN BUSHING | |
| 22E | NON-DRIVE DAMPER AXLE ASST. | SS PIN W/ BRONZE BUSHING | |
| 22F | NON-DRIVE DAMPER AXLE ASST. | SS PIN W/ SS BUSHING | |
| 23A | DRIVE SIDE DAMPER AXLE ASST. | ZC/GALV. STEEL | |
| 23B | DRIVE SIDE DAMPER AXLE ASST. | SS | |
| 24A | 1/4 DIA. E-CLIP | ZP | |
| 24B | 1/4 DIA. E-CLIP | SS | |
| 25 | #8 X .75 TPH TYPE AB SMS | SS | |
| 26 | #14 X .75 TEK | ZP | |
| 27A | 1/4-20 X 1.25 HH CS | ZP | |
| 27B | 1/4-20 X 1.5 HH CS | SS | |
| 27C | 1/4-20 X 0.75 HH CS | SS | |
| 28A | 1/4-20 NUT | ZP | |
| 28B | 1/4-20 NUT | SS | |
| 29 | REINFORCING STRAP | 18-8 SS | |
| 30 | 1/4-20 X .562 BALL SWIVEL | ZP | |
| 31A | DAMPER BLADE DRIVE LEVER | SS | |
| 31B | DAMPER BLADE DRIVE LEVER | GALV. STEEL | |
| 32 | DAMPER MANUAL QUAD ASSY. | | |
| 33 | 5/16 DIA. LINKAGE ROD | ZP | |
| 34 | #12-14 X 3/4" TPH SMS 18-8 SS | 18-8 SS | |
| 35 | #10 X 1 1/4" SMS 316 SS | 316 SS | |
| 36 | 1/4" DIA. SCREW | SS | 1 1/2" LONG |
| 37 | 1/4" DIA. SCREW | SS | 1" LONG |
| 38A | DEAD LOAD SHIMS | | NOT BY GREENHECK |
| 38B | SEALANT AND BACKER ROD | | NOT BY GREENHECK |
| 39 | 5 1/4 X 2 X 1/4 ANGLE | 6063-T5 ALUMINUM | USED AT JAMB OF LOUVER/SLEEVE |
| 40 | 4" CHANNEL | 6061-T6 ALUMINUM | USED AT JAMB OF LOUVER/SLEEVE |
| 41 | MULLION SLEEVE BRACKET | 5052-H32 ALUMINUM | |
| 42 | 1 1/4 X 1 1/4 X 1/8 ANGLE | 6063-T5 ALUMINUM | MIN SIZE, JAMB ATTACHMENT ANGLE |
| 43 | BLADE SUPPORT, ALTERNATE | 6063-T5 ALUMINUM | ALTERNATE STYLE |
| 44 | STEEL MULLION END CAP (SM) | STEEL | FACTORY WELDED TO MULLION |
| 45 | ALUMINUM MULLION END CAP (SM) | 5052-H32 ALUMINUM | FACTORY WELDED TO MULLION |
| 46 | STEEL MULLION END CAP (LG) | STEEL | FACTORY WELDED TO MULLION |
| 47 | ALUM MULLION END CAP (LG) | 5052-H32 ALUMINUM | FACTORY WELDED TO MULLION |
| 48 | MULLION MOUNTING ANG. BRACKET | STEEL 36 KSI, OR 6061-T6 | MULLION MOUNTING ANGLE, H≤144 |
| 49 | 1/4" DIA. THREAD STUD | SS OR PLATED STEEL | 1/2" MIN. LONG |

PRODUCT RENEWED
as complying with the Florida Building Code
Acceptance No 12-0830.07
Expiration Date 12/06/2017
By
Miami-Dade Product Control

PRODUCT REVISED
as complying with the Florida Building Code
Acceptance No 10-0121.09
Expiration Date 12/06/2012
By
Miami-Dade Product Control Division

| ITEM | CONCRETE | CMU | STEEL | WOOD | MIN. | FASTENER TYPE | ALL FASTENERS ARE STEEL OR STAINLESS | | | | |
|---|---|---|---|---|---|---|---|---|---|---|---|
| 50 | JAMB PERIMETER ANGLE FASTENER, HEIGHT <=144 | | | | | | DIAMETER | # REQ'D. | CENTERS | EDGE | EMBED.* | |
| 50A | X | | | | 2KSI | "POWERS WEDGE BOLT" | 3/8 | VARIES | 6.00 | 1.215 | 3.500 | |
| 50B | X | | | | 4KSI | "POWERS WEDGE BOLT" | 3/8 | VARIES | 6.00 | 1.215 | 3.500 | |
| 50C | X | | | | 2KSI | SCOTS TAPCON / TAPCON | 1/4 | VARIES | 4.75 | 1.500 | 1.750 | |
| 50D | X | | | | 4KSI | SCOTS TAPCON / TAPCON | 1/4 | VARIES | 6.00 | 1.500 | 1.750 | |
| 50E | | X | | | 1.5KSI | SCOTS TAPCON / TAPCON | 1/4 | VARIES | 3.00 | 1.500 | 1.750 | |
| 50F | | | X | | 65KSI Fy | BOLT/NUT OR TAPPING SCREW | 1/4 | VARIES | 6.00 | 0.500 | 0.125 | |
| 50G | | | | X | SG 0.42 | LAG | 3/8 | VARIES | 6.00 | 1.500 | 2.375 | |
| 51 | MULLION END PLATE FASTENER, HEIGHT <=144 | | | | | | DIAMETER | # REQ'D. | CENTERS | EDGE | EMBED.* | |
| 51A | X | | | | 2KSI | "POWERS WEDGE BOLT" | 3/8 | 8/END | 1.50 | 1.75 | 3.500 | |
| 51B | X | | | | 4KSI | "POWERS WEDGE BOLT" | 3/8 | 8/END | 1.50 | 1.75 | 3.500 | |
| 51C | X | | | | 2KSI | SCOTS TAPCON / TAPCON | 1/4 | 9/END | 2.00 | 1.50 | 1.625 | |
| 51D | X | | | | 4KSI | SCOTS TAPCON / TAPCON | 1/4 | 8/END | 2.00 | 1.50 | 1.625 | |
| 51E | | | X | | 65KSI Fy | BOLT/NUT OR TAPPING SCREW | 1/4 | 8/END | 1.00 | 0.50 | 0.125 | |
| 51F | | | | X | SG 0.42 | LAG | 3/8 | 7/END | 1.50 | 1.75 | 2.375 | GROUP |
| 52 | MULLION ANGLE MOUNT FASTENER, HEIGHT <=144 | | | | | | DIAMETER | # REQ'D. | CENTERS | EDGE | EMBED.* | CENTER |
| 52A | X | | | | 2KSI | "POWERS WEDGE BOLT" | 3/8 | 12/ANG. | 3.375 | 2.250 | 3.500 | 3.766 |
| 52B | X | | | | 4KSI | "POWERS WEDGE BOLT" | 3/8 | 9/ANG. | 3.375 | 2.250 | 3.500 | 3.766 |
| 52C | X | | | | 2KSI | SCOTS TAPCON / TAPCON | 1/4 | 32/ANG. | 2.000 | 1.500 | 1.750 | 3.375 |
| 52D | X | | | | 4KSI | SCOTS TAPCON / TAPCON | 1/4 | 27/ANG. | 2.000 | 1.500 | 1.750 | 3.375 |
| 52E | | X | | | 1.5KSI | SCOTS TAPCON / TAPCON | 1/4 | 32/ANG. | 2.000 | 1.500 | 1.750 | 3.375 |
| 52F | | | X | | 65KSI Fy | BOLT/NUT OR TAPPING SCREW | 1/4 | 16/ANG. | 1.000 | 0.500 | 0.125 | 3.000 |
| 52G | | | X | | 65KSI Fy | BOLT/NUT OR TAPPING SCREW | 1/4 | 11/ANG. | 1.000 | 0.500 | 0.188 | 3.000 |
| 52H | | | X | | 65KSI Fy | BOLT/NUT OR TAPPING SCREW | 1/4 | 16/ANG. | 1.000 | 0.500 | 0.188 | 3.766 |
| 52I | | | X | | 65KSI Fy | BOLT/NUT OR TAPPING SCREW | 5/16 | 12/ANG. | 1.000 | 0.625 | 0.125 | 3.000 |
| 52J | | | X | | 65KSI Fy | BOLT/NUT OR TAPPING SCREW | 5/16 | 16/ANG. | 1.000 | 0.625 | 0.125 | 3.766 |
| 52K | | | | X | SG 0.42 | LAG | 3/8 | 16/ANG. | 1.500 | 1.500 | 2.875 | 3.766 |
| 52L | | | | X | SG 0.42 | LAG | 3/8 | 11/ANG. | 1.500 | 1.500 | 2.875 | 3.000 |
| 53 | MULLION END PLATE FASTENER, HEIGHT <=96 | | | | | | DIAMETER | # REQ'D. | CENTERS | EDGE | EMBED.* | |
| 53A | X | | | | 2KSI | "POWERS WEDGE BOLT" | 3/8 | 5/CAP | 1.50 | 1.6 | 3.500 | |
| 53B | X | | | | 4KSI | "POWERS WEDGE BOLT" | 3/8 | 5/CAP | 1.50 | 1.6 | 3.500 | |
| 53C | X | | | | 2KSI | "POWERS WEDGE BOLT" | 3/8 | 5/CAP | 2.00 | 1.75 | 3.500 | |
| 53D | X | | | | 4KSI | "POWERS WEDGE BOLT" | 3/8 | 5/CAP | 2.00 | 1.75 | 3.500 | |
| 53E | X | | | | 2KSI | SCOTS TAPCON / TAPCON | 1/4 | 6/CAP | 2.00 | 1.50 | 1.750 | |
| 53F | X | | | | 4KSI | SCOTS TAPCON / TAPCON | 1/4 | 6/CAP | 2.00 | 1.50 | 1.750 | |
| 53G | | | X | | 65KSI Fy | BOLT/NUT OR TAPPING SCREW | 1/4 | 3/CAP | 1.00 | 0.50 | 0.125 | |
| 53H | | | | X | SG 0.42 | LAG | 3/8 | 5/CAP | 1.50 | 1.75 | 2.375 | GROUP |
| 54 | MULLION ANGLE MOUNT FASTENER, HK=96 | | | | | | DIAMETER | # REQ'D. | CENTERS | EDGE | EMBED.* | CENTER |
| 54A | X | | | | 2KSI | "POWERS WEDGE BOLT" | 3/8 | 4/ANG. | 3.375 | 2.25 | 3.500 | 3.766 |
| 54B | X | | | | 4KSI | "POWERS WEDGE BOLT" | 3/8 | 3/ANG. | 3.375 | 2.25 | 3.500 | 3.766 |
| 54C | X | | | | 2KSI | SCOTS TAPCON / TAPCON | 1/4 | 11/ANG. | 2.000 | 1.50 | 1.750 | 3.375 |
| 54D | X | | | | 4KSI | SCOTS TAPCON / TAPCON | 1/4 | 9/ANG. | 2.000 | 1.50 | 1.750 | 3.375 |
| 54E | | X | | | 1.5KSI | SCOTS TAPCON / TAPCON | 1/4 | 11/ANG. | 2.000 | 1.50 | 1.750 | 3.375 |
| 54F | | | X | | 65KSI Fy | BOLT/NUT OR TAPPING SCREW | 1/4 | 7/ANG. | 1.000 | 0.50 | 0.125 | 3.766 |
| 54G | | | X | | 65KSI Fy | BOLT/NUT OR TAPPING SCREW | 1/4 | 6/ANG. | 1.000 | 0.50 | 0.125 | 3.000 |
| 54H | | | | X | SG 0.42 | LAG | 3/8 | 5/ANG. | 1.500 | 1.50 | 2.875 | 3.766 |
| 54I | | | | X | SG 0.42 | LAG | 3/8 | 4/ANG. | 1.500 | 1.50 | 2.875 | 3.000 |

*EMBEDMENT DEPTH IS EQUAL TO OVERALL FASTENER LENGTH FOR CONCRETE/CMU FASTENERS.

GENERAL NOTES:
1. IT SHALL BE THE RESPONSIBILITY OF THE PERMIT HOLDER TO VERIFY THE STRUCTURAL INTEGRITY OF THE EXISTING STRUCTURE TO SUPPORT THE LOADS IMPOSED BY THE LOUVER(S).
2. THE ESD-635D AND ESD-635D WITH VCD-40 HAVE BEEN DESIGNED AND TESTED IN ACCORDANCE WITH THE FLORIDA BUILDING CODE (FBC) AND TEST PROTOCOLS TAS-201 (IMPACT), TAS-202 (UNIFORM STATIC PRESSURE), AND TAS-203 (CYCLIC FATIGUE).
3. MAXIMUM SINGLE SECTION SIZE IS 72" WIDE X 144" HIGH.
4. MAXIMUM ASSEMBLED LOUVER SIZE IS UNLIMITED WIDE X 144" HIGH.
5. SECTIONS OR ASSEMBLIES MAY BE STACKED VERTICALLY PROVIDING A SUITABLE STRUCTURAL SUPPORT IS DESIGNED AND INSTALLED BY OTHERS TO SUPPORT ALL LOADS TRANSFERRED FROM THE LOUVER.
6. CMU SHALL BE ASTM C90, TYPE II, 2,000 MIN PSI GROUT-FILLED.
7. THE SLEEVE MOUNT STYLE LOUVER UTILIZES AN ANCHORLESS INSTALLATION METHOD THAT DOES NOT REQUIRE THE USE OF FASTENERS INTO THE SUBSTRATE. IT MAY BE INSTALLED IN ANY SUBSTRATE THAT WILL WITHSTAND THE LOADS TRANSFERRED TO IT BY THE LOUVER. GREENHECK DOES NOT DETERMINE THE STRUCTURAL INTEGRITY OF THE SUBSTRATE STRUCTURE.
8. THE CONTINUOUS ANGLE MOUNT STYLE UTILIZES A CONTINUOUS JAMB ANGLE THAT IS ATTACHED TO THE SUBSTRATE BY FASTENERS. IT MAY BE INSTALLED IN CONCRETE, CMU, STEEL, OR WOOD ACCORDING TO THE FASTENER SCHEDULE. GREENHECK DOES NOT DETERMINE THE STRUCTURAL INTEGRITY OF THE SUBSTRATE STRUCTURE.
9. LOUVER ASSEMBLY IS QUALIFIED FOR A MAXIMUM DESIGN LOAD OF +/- 150 PSF.
10. LOUVER ASSEMBLY WITH AND WITHOUT VCD-40 DAMPER SHALL ONLY BE INSTALLED IN A LOCATION WHERE THE ROOM BEHIND THE LOUVER IS DESIGNED TO DRAIN WATER PENETRATING INTO THE ROOM AND THE ROOM WILL HOUSE WATER RESISTANT/WATER PROOF EQUIPMENT, COMPONENTS, AND/OR SUPPLIES.
11. INSTALLER TO PROVIDE SEPARATION OF DISSIMILAR MATERIALS AS REQUIRED.
12. THE VCD-40 MAY BE OPERATED BY A MANUAL QUADRANT OR BY AN ELECTRIC OR PNEUMATIC ACTUATOR. THE DAMPER'S ACTUATOR IS NOT PART OF THIS APPROVAL, BUT SHALL BE CERTIFIED BY AN INDEPENDENT TESTING AGENCY.
13. FRAME CONSTRUCTION: HEAD AND SILL ARE SQUARE CUT. JAMBS ARE SQUARE CUT @ HEAD AND MITERED @ SILL. CORNERS ARE SECURED WITH (2) #10x1-1/4 SMS. BLADES ARE SECURED TO JAMBS WITH (2) #10x1-1/4 SMS AND WELDED @ EACH END.
14. STEEL/STAINLESS-STEEL/ALUMINUM PARTS MAY BE MADE OUT OF ALTERNATE ALLOY THAT HAS EQUAL OR GREATER YIELD STRENGTH.
15. BLADE SUPPORT ANGLE AND BLADE SUPPORT BRACKETS ONLY REQUIRED WHEN ACTUAL LOUVER SECTION WIDTH IS GREATER THAN 36 INCHES.

DRAWN BY MES | DATE 8/25/2010 | SCALE | SHEET NO. 19 OF 22 | CAD DRAWING NO. ESD-635D

GREENHECK
P.O.BOX 410 SCHOFIELD, WISCONSIN 54476-0410

TITLE
ESD-635D LOUVER
W/ ANGLE MOUNT AND W/O VCD-40
SLEEVE/CONTINUOUS MOUNT
NOTES/BILL OF MATERIAL


RICE ENGINEERING
105 School Creek Trail
Luxemburg, WI 54217
Phone: 920.845.1042
Fax: 920.845.1048
www.rice-inc.com

Florida Firm No: F-010000005061
Certificate of Authorization: #9090
L. David Rice
Registration No: 50923


L. DAVID RICE LICENSE NO. 50923 STATE OF FLORIDA PROFESSIONAL ENGINEER

SEP 03 2010

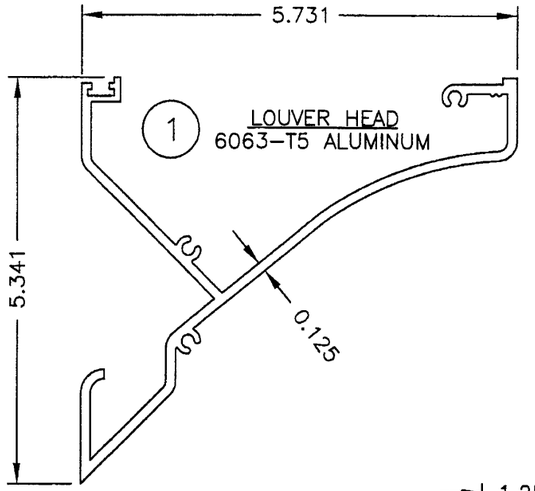


1 LOUVER HEAD
6063–T5 ALUMINUM

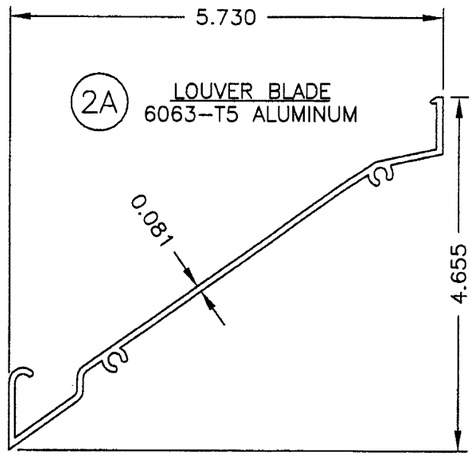


2A LOUVER BLADE
6063–T5 ALUMINUM

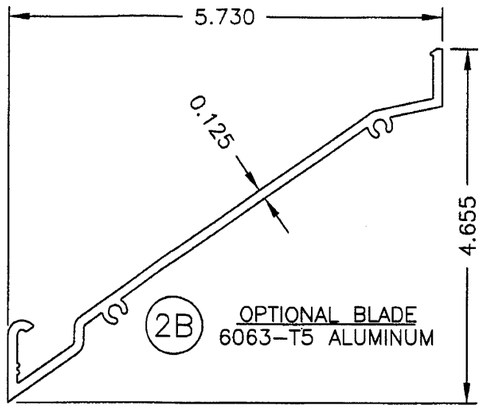


2B OPTIONAL BLADE
6063–T5 ALUMINUM

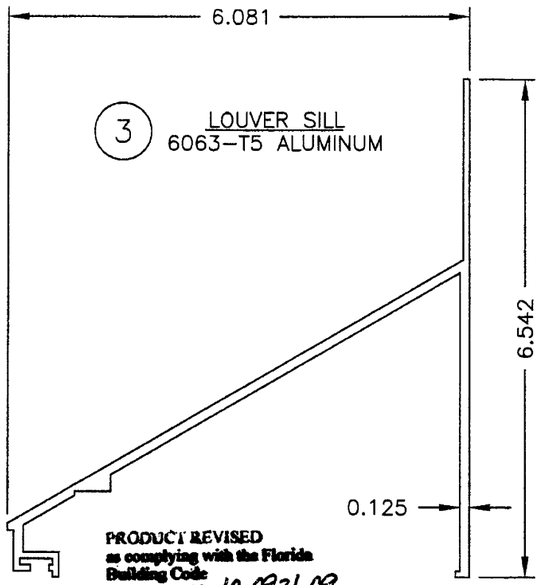


3 LOUVER SILL
6063–T5 ALUMINUM

PRODUCT REVISED
as complying with the Florida
Building Code
Acceptance No 10-0921.09
Expiration Date 12/06/2012
By
Miami Dade Product Control
Division

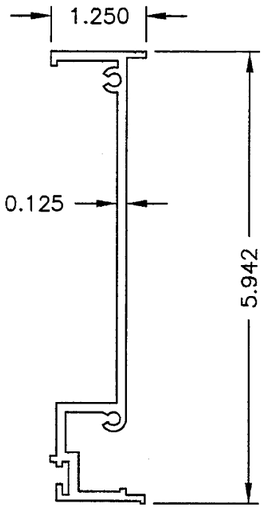


4A LOUVER JAMB
6063–T5 ALUMINUM

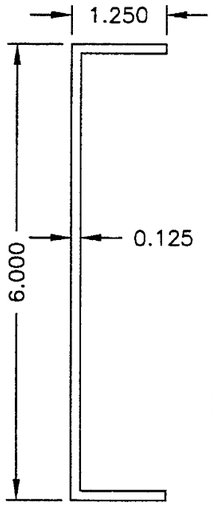


4B OPTIONAL JAMB
6063–T5 ALUMINUM

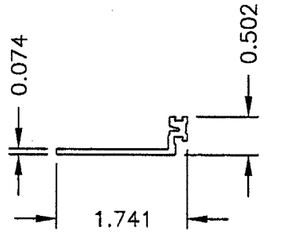


5 LOUVER/DAMPER FLANGE
6063–T5 ALUMINUM

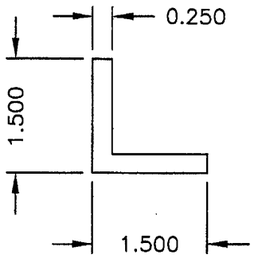


7 LOUVER BLADE
SUPPORT/SLEEVE MOUNT ANGLE
6063–T5 ALUMINUM

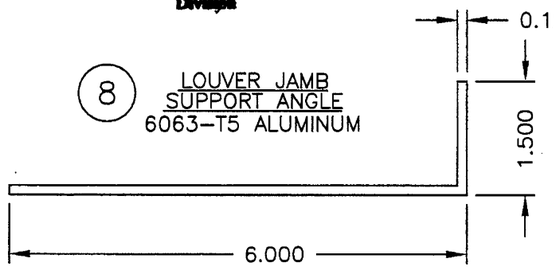


8 LOUVER JAMB
SUPPORT ANGLE
6063–T5 ALUMINUM

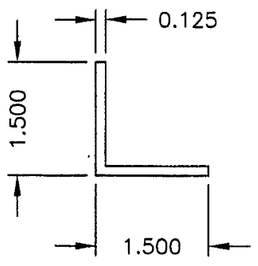


9 LOUVER SLEEVE
ATTACHMENT ANGLE
6063–T5 ALUMINUM

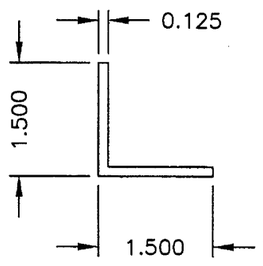


10 LOUVER SLEEVE FLANGE
SUPPORT ANGLE
6063–T5 ALUMINUM

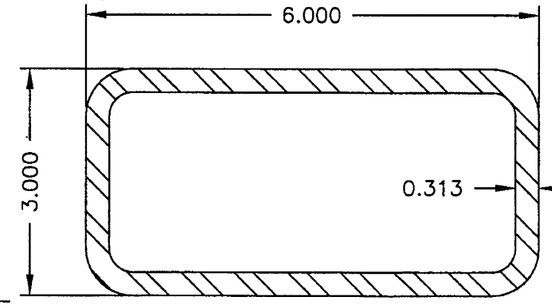


11 STEEL TUBE
A36

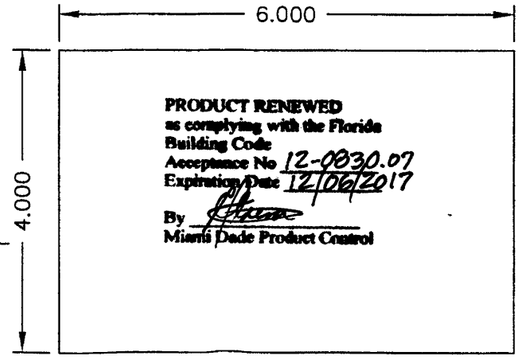


PRODUCT RENEWED
as complying with the Florida
Building Code
Acceptance No 12-0030.07
Expiration Date 12/06/2017
By
Miami Dade Product Control

12 ALUMINUM SUPPORT SHIM
5052–H32 ALUMINUM

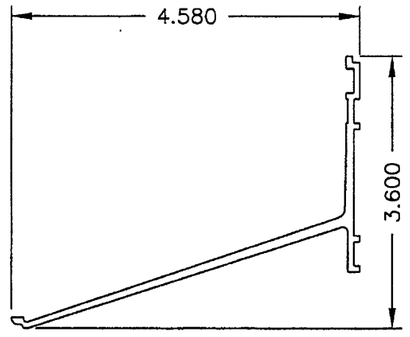


13 LOUVER BLADE BRACKET
6063–T5 ALUMINUM

SEP 0 3 2010

GREENHECK
P.O.BOX 410 SCHOFIELD,
WISCONSIN 54476-0410

| | |
|---|---|
| DRAWN BY | MES |
| DATE | 8/25/2010 |
| SCALE | 1:2 |
| SHEET NO. | 20 OF 22 |
| CAD DRAWING NO. | ESD-635D |

TITLE
ESD-635D LOUVER
SLEEVE/CONTINUOUS MOUNT
W/ AND W/O VCD-40
PART PROFILES


RICE
ENGINEERING
105 School Creek Trail
Luxemburg, WI 54217
Phone: 920.845.1042
Fax: 920.845.1048
www.rice-inc.com

Florida Firm No: F-01000005061
Certificate of Authorization: #9090
L. David Rice
Registration No: 50923


L. DAVID RICE
LICENSED
No. 50923
STATE OF
FLORIDA
PROFESSIONAL ENGINEER

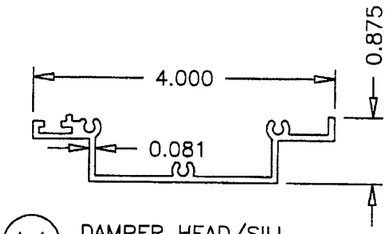


14 DAMPER HEAD/SILL
6063–T5 ALUMINUM

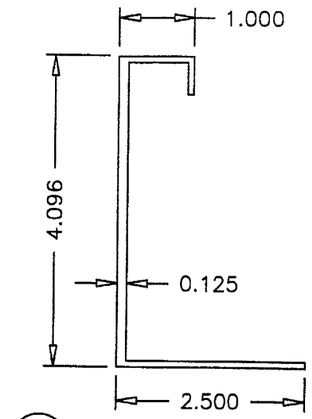


15 DAMPER JAMB
6063–T5 ALUMINUM

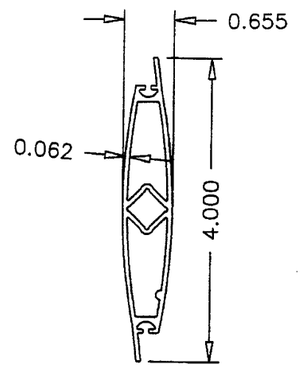


16 DAMPER BLADE
6063–T5 ALUMINUM

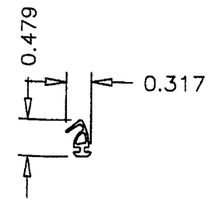


17 DAMPER BLADE SEAL
MATERIAL VARIES

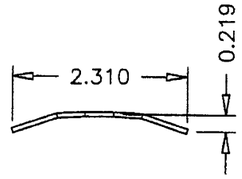


18 DAMPER JAMB SEAL
.007" SS

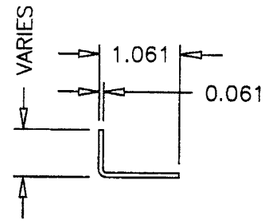


19 DAMPER TOP/BOTTOM
CLOSURE
ALUMINUM

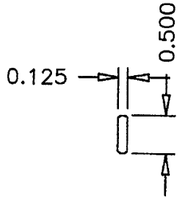


20 DAMPER LINKAGE BAR
MATERIAL VARIES

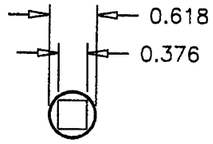


21 DAMPER AXLE BUSHING (.445" LG.)
MATERIAL VARIES

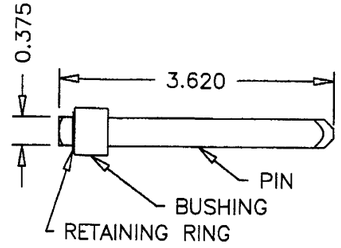


22 NON–DRIVE DAMPER AXLE ASSY.
MATERIAL VARIES

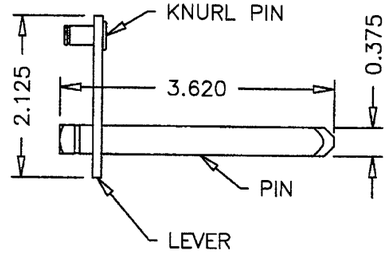


23 DRIVE–SIDE DAMPER AXLE ASSY.
MATERIAL VARIES

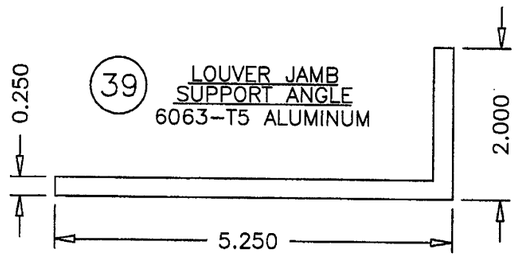


39 LOUVER JAMB
SUPPORT ANGLE
6063–T5 ALUMINUM

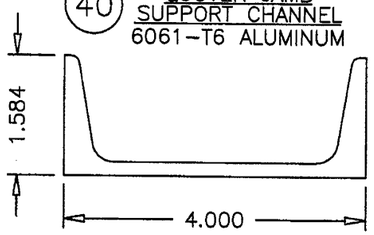


40 LOUVER JAMB
SUPPORT CHANNEL
6061–T6 ALUMINUM

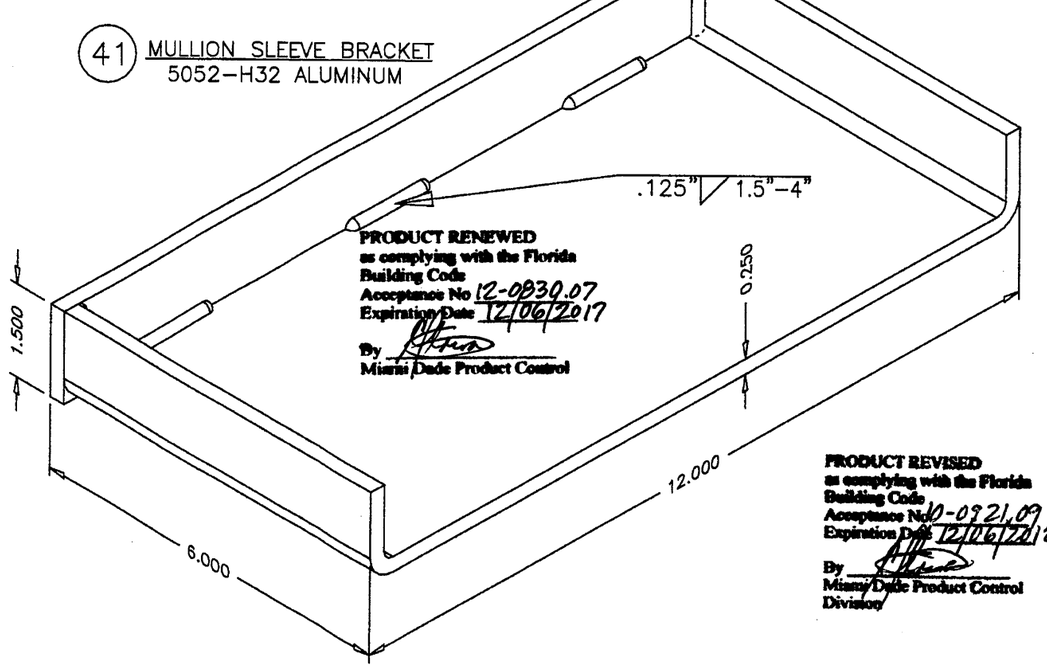


41 MULLION SLEEVE BRACKET
5052–H32 ALUMINUM

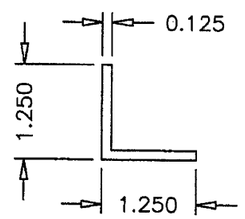


42 LOUVER JAMB
ATTACHMENT ANGLE
6063–T5 ALUMINUM

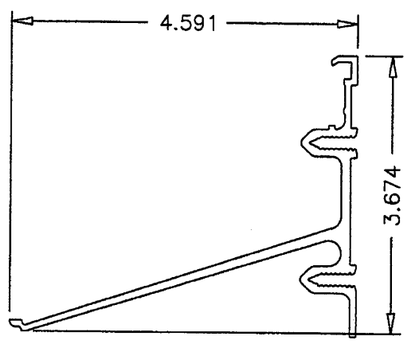


43 ALTERNATE LOUVER BLADE BRACKET
6063–T5 ALUMINUM

PRODUCT RENEWED
as complying with the Florida
Building Code
Acceptance No 12-0830.07
Expiration Date 12/06/2017
By
Miami-Dade Product Control

PRODUCT REVISED
as complying with the Florida
Building Code
Acceptance No 10-0921.09
Expiration Date 12/06/2012
By
Miami-Dade Product Control
Division

SEP 0 3 2010

GREENHECK
P.O.BOX 410 SCHOFIELD,
WISCONSIN 54476-0410

| | |
|---|---|
| DRAWN BY | MES |
| DATE | 8/25/2010 |
| SCALE | 1:2 |
| SHEET NO. | 21 OF 22 |
| CAD DRAWING NO. | ESD-635D |

TITLE
ESD-635D LOUVER
SLEEVE/CONTINUOUS MOUNT
W/ AND W/O VCD-40
PART PROFILES

RICE
ENGINEERING
105 School Creek Trail
Luxemburg, WI 54217
Phone: 920.845.1042
Fax: 920.845.1048
www.rice-inc.com

Florida Firm No: F-01000005061
Certificate of Authorization: #9090
L. David Rice
Registration No: 50923

L. DAVID RICE
LICENSE
No. 50923
STATE OF
FLORIDA
PROFESSIONAL ENGINEER

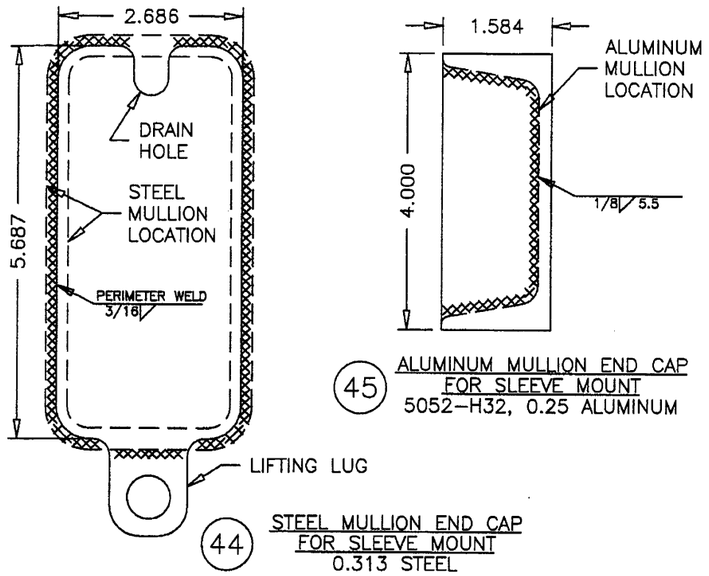


44 STEEL MULLION END CAP FOR SLEEVE MOUNT
0.313 STEEL




45 ALUMINUM MULLION END CAP FOR SLEEVE MOUNT
5052–H32, 0.25 ALUMINUM

| DIM. | DESCRIPTION |
|---|---|
| A | ≥0.375/0.50 FOR 1/4ø FASTENER IN ALUMINUM/STEEL |
| A | ≥0.563/0.75 FOR 3/8ø FASTENER IN ALUMINUM/STEEL |
| B | ≥FASTENER SPACING DISTANCE |
| C | ≥FASTENER CLEARANCE HOLE DIAMETER |
| D | ≥FASTENER SUBSTRATE EDGE DISTANCE |

GROUP CENTER = CENTER OF FASTENER HOLE PATTERN

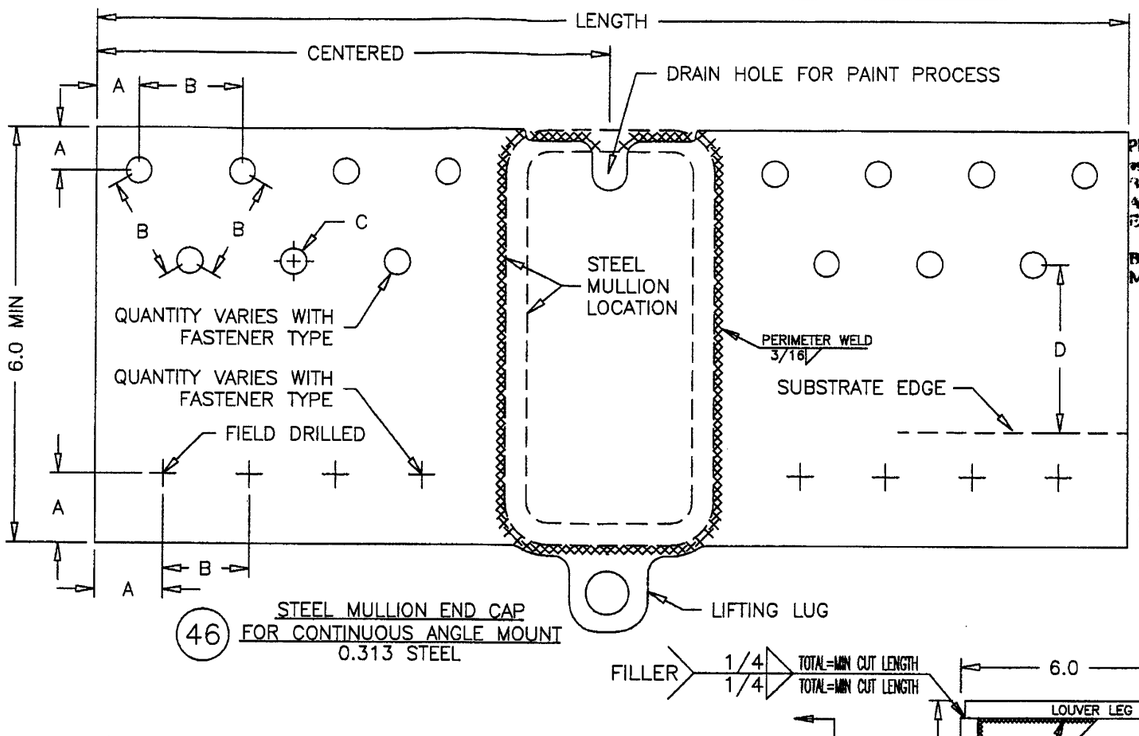


46 STEEL MULLION END CAP FOR CONTINUOUS ANGLE MOUNT
0.313 STEEL

PRODUCT RENEWED
as complying with the Florida Building Code
Acceptance No 12-0830.07
Expiration Date 12/06/2017
By
Miami Dade Product Control

PRODUCT REVISED
as complying with the Florida Building Code
Acceptance No 10-0921.09
Expiration Date 12/06/2012
By
Miami Dade Product Control Division

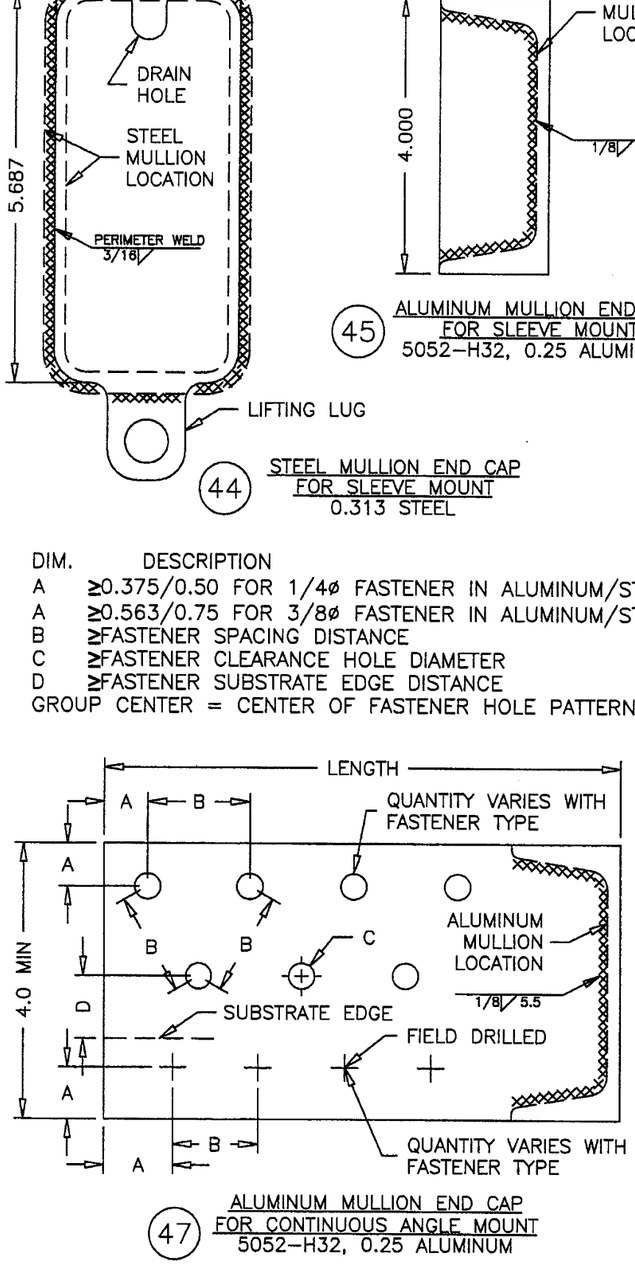


47 ALUMINUM MULLION END CAP FOR CONTINUOUS ANGLE MOUNT
5052–H32, 0.25 ALUMINUM

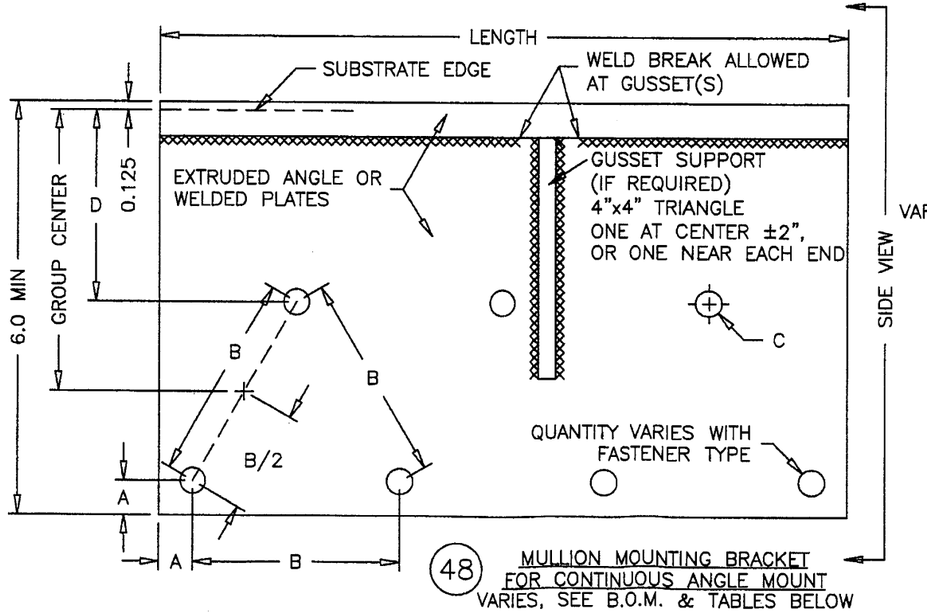


48 MULLION MOUNTING BRACKET FOR CONTINUOUS ANGLE MOUNT
VARIES, SEE B.O.M. & TABLES BELOW

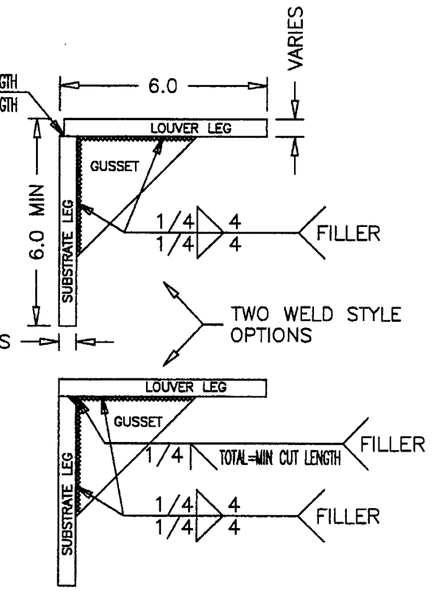


SIDE VIEWS SHOWN AT 1/2 SCALE

FILLER MAT'L.
ALUM=4043 OR 5356
STEEL=E70XX

| MULLION MOUNTING BRACKET TABLE, 1 OF 2 | | | | | | |
|---|---|---|---|---|---|---|
| LOUVER HEIGHT | SUBSTRATE LEG THK. | LOUVER LEG THK. | GUSSET THK. | MIN CUT LENGTH | MAT'L TYPE | PROCESS TYPE |
| ≤144 | ≥1/2 | ≥1/2 | NA | 16.5 | 6061-T6 | EXTRUDED |
| ≤144 | ≥7/16 | ≥7/16 | NA | 24 | A36 | ROLLED |
| ≤144 | ≥1/2 | ≥1/2 | NA | 18.5 | A36 | ROLLED |
| ≤144 | ≥5/16 | ≥1/4 | ≥5/16 | 20 | 6061-T6 | WELDED |
| ≤144 | ≥5/16 | ≥3/16 | ≥5/16 | 20 | STEEL | WELDED |

| MULLION MOUNTING BRACKET TABLE, 2 OF 2 | | | | | | |
|---|---|---|---|---|---|---|
| LOUVER HEIGHT | SUBSTRATE LEG THK. | LOUVER LEG THK. | GUSSET THK. | MIN CUT LENGTH | MAT'L TYPE | PROCESS TYPE |
| ≤96 | ≥1/2 | ≥1/2 | NA | 6.6 | 6061-T6 | EXTRUDED |
| ≤96 | ≥3/8 | ≥3/8 | NA | 12.34 | STEEL | ROLLED |
| ≤96 | ≥7/16 | ≥7/16 | NA | 9 | STEEL | ROLLED |
| ≤96 | ≥5/16 | ≥1/4 | ≥5/16 | 9 | 6061-T6 | WELDED |
| ≤96 | ≥5/16 | ≥3/16 | ≥5/16 | 9 | STEEL | WELDED |

SEP 0 3 2010

DRAWN BY MES
DATE 8/25/2010
SCALE 1:2.2
SHEET NO. 22 OF 22
CAD DRAWING NO. ESD-635D

TITLE
ESD-635D LOUVER
SLEEVE/CONTINUOUS MOUNT
W/ AND W/O VCD-40
PART PROFILES

GRENECK
P.O.BOX 410 SCHOFIELD, WISCONSIN 54476-0410

RICE ENGINEERING
105 School Creek Trail
Luxemburg, WI 54217
Phone: 920.845.1042
Fax: 920.845.1048
www.rice-inc.com

Florida Firm No: F-01000005061
Certificate of Authorization: #9090
L. David Rice
Registration No: 50923

L. DAVID RICE LICENSED No. 50923 STATE OF FLORIDA PROFESSIONAL ENGINEER