MIAMI-DADE COUNTY
PRODUCT CONTROL SECTION
11805 SW 26 Street, Room 208
Miami, Florida 33175-2474
T (786) 315-2590 F (786) 315-2599
www.miamidade.gov/economy

DEPARTMENT OF REGULATORY AND ECONOMIC RESOURCES (RER)
BOARD AND CODE ADMINISTRATION DIVISION

NOTICE OF ACCEPTANCE (NOA)

Ruskin Company
3900 Dr. Greaves Road
Grandview, MO 64030

SCOPE:

This NOA is being issued under the applicable rules and regulations governing the use of construction materials. The documentation submitted has been reviewed and accepted by Miami-Dade County RER-Product Control Section to be used in Miami Dade County and other areas where allowed by the Authority Having Jurisdiction (AHJ).

This NOA shall not be valid after the expiration date stated below. The Miami-Dade County Product Control Section (In Miami Dade County) and/or the AHJ (in areas other than Miami Dade County) reserve the right to have this product or material tested for quality assurance purposes. If this product or material fails to perform in the accepted manner, the manufacturer will incur the expense of such testing and the AHJ may immediately revoke, modify, or suspend the use of such product or material within their jurisdiction. RER reserves the right to revoke this acceptance, if it is determined by Miami-Dade County Product Control Section that this product or material fails to meet the requirements of the applicable building code. This product is approved as described herein, and has been designed to comply with the Florida Building Code, including the High Velocity Hurricane Zone.

DESCRIPTION: Model EME420MD Aluminum Louver

APPROVAL DOCUMENT: Drawing No. **60-022285-00B**, titled "EME420MD ", sheets 1 through 21 of 21, dated 05/16/2012, with revision A dated 11/29/2012, prepared by Ruskin Company, signed and sealed by Daniel J. Rau, P.E., bearing the Miami-Dade County Product Control approval stamp with the Notice of Acceptance number and approval date by the Miami-Dade County Product Control Section.

MISSILE IMPACT RATING: Large and Small Missile Impact Resistant

LABELING: Each unit shall bear a permanent label with the manufacturer's name or logo, Geneva, AL, model/series, and following statement: "Miami-Dade County Product Control Approved", unless otherwise noted herein.

RENEWAL of this NOA shall be considered after a renewal application has been filed and there has been no change in the applicable building code negatively affecting the performance of this product.

TERMINATION of this NOA will occur after the expiration date or if there has been a revision or change in the materials, use, and/or manufacture of the product or process. Misuse of this NOA as an endorsement of any product, for sales, advertising or any other purposes shall automatically terminate this NOA. Failure to comply with any section of this NOA shall be cause for termination and removal of NOA.

ADVERTISEMENT: The NOA number preceded by the words Miami-Dade County, Florida, and followed by the expiration date may be displayed in advertising literature. If any portion of the NOA is displayed, then it shall be done in its entirety.

INSPECTION: A copy of this entire NOA shall be provided to the user by the manufacturer or its distributors and shall be available for inspection at the job site at the request of the Building Official.

This NOA consists of this page 1 and evidence pages E-1 and E-2, as well as approval document mentioned above.

The submitted documentation was reviewed by **Carlos M. Utrera, P.E.**

MIAMI-DADE COUNTY APPROVED

02/04/2013

NOA No. 12-0907.03
Expiration Date: February 14, 2018
Approval Date: February 14, 2013

NOTICE OF ACCEPTANCE: EVIDENCE SUBMITTED

A. DRAWINGS

1. Drawing No. **60-022285-00B**, titled "EME420MD ", sheets 1 through 21 of 21, dated 05/16/2012, with revision A dated 11/29/2012, prepared by Ruskin Company, signed and sealed by Daniel J. Rau, P.E.

B. TESTS

1. Test report on 1) Uniform Static Air Pressure Test, Loading per FBC TAS 202-94
   2) Large Missile Impact Test per FBC, TAS 201-94
   3) Cyclic Wind Pressure Loading per FBC, TAS 203-94
   along with marked-up drawings and installation diagram of Model EME420MD (Assembly A) Aluminum Louvers, prepared by National Certified Testing Laboratories, Report No. **210-3792-1**, dated 05/23/2012, revised on 11/29/2012, signed and sealed by Gerard J. Ferrara, P.E.
2. Test report on 1) Uniform Static Air Pressure Test, Loading per FBC TAS 202-94
   2) Large Missile Impact Test per FBC, TAS 201-94
   3) Cyclic Wind Pressure Loading per FBC, TAS 203-94
   along with marked-up drawings and installation diagram of Model EME420MD (Assembly B) Aluminum Louvers, prepared by National Certified Testing Laboratories, Report No. **210-3782-1**, dated 05/23/2012, revised on 11/29/2012, signed and sealed by Gerard J. Ferrara, P.E.
3. Test report on 1) Uniform Static Air Pressure Test, Loading per FBC TAS 202-94
   2) Large Missile Impact Test per FBC, TAS 201-94
   3) Cyclic Wind Pressure Loading per FBC, TAS 203-94
   along with marked-up drawings and installation diagram of Model EME420MD (Assembly C) Aluminum Louvers, prepared by National Certified Testing Laboratories, Report No. **210-3784-1**, dated 05/23/2012, revised on 11/29/2012, signed and sealed by Gerard J. Ferrara, P.E.
4. Test report on 1) Uniform Static Air Pressure Test, Loading per FBC TAS 202-94
   2) Large Missile Impact Test per FBC, TAS 201-94
   3) Cyclic Wind Pressure Loading per FBC, TAS 203-94
   along with marked-up drawings and installation diagram of Model EME420MD (Assembly D) Aluminum Louvers, prepared by National Certified Testing Laboratories, Report No. **210-3790-1**, dated 05/23/2012, revised on 11/29/2012, signed and sealed by Gerard J. Ferrara, P.E.
5. Test report on 1) Uniform Static Air Pressure Test, Loading per FBC TAS 202-94
   2) Large Missile Impact Test per FBC, TAS 201-94
   3) Cyclic Wind Pressure Loading per FBC, TAS 203-94
   along with marked-up drawings and installation diagram of Model EME420MD (Assembly E) Aluminum Louvers, prepared by National Certified Testing Laboratories, Report No. **210-3785-1**, dated 05/23/2012, revised on 11/29/2012, signed and sealed by Gerard J. Ferrara, P.E.

02/04/2013

Carlos M. Utrera, P.E.
Product Control Examiner
NOA No. 12-0907.03
Expiration Date: February 14, 2018
Approval Date: February 14, 2013

NOTICE OF ACCEPTANCE: EVIDENCE SUBMITTED

B. TESTS (Continued)

6. Test report on 1) Uniform Static Air Pressure Test, Loading per FBC TAS 202-94
2) Large Missile Impact Test per FBC, TAS 201-94
3) Cyclic Wind Pressure Loading per FBC, TAS 203-94
along with marked-up drawings and installation diagram of Model EME420MD (Assembly F) Aluminum Louvers, prepared by National Certified Testing Laboratories, Report No. **210-3784-3**, dated 05/23/2012, revised on 11/29/2012, signed and sealed by Gerard J. Ferrara, P.E.

C. CALCULATIONS

1. Louver wind load review, prepared by Ruskin Company, dated 08/16/2012, signed and sealed by Daniel J. Rau, P.E.

D. QUALITY ASSURANCE

1. Miami-Dade Department of Regulatory and Economic Resources (RER)

E. MATERIAL CERTIFICATIONS

1. Test report on impact test per AMCA 540 of an EME420MD louver, prepared by Ruskin Company, Test Report No. **082412A**, dated 08/24/2012, signed and sealed by Daniel J. Rau, P.E.

F. STATEMENTS

1. Statement letter of code conformance to 2010 FBC, issued by Ruskin Company, dated 08/17/2012, signed and sealed by Daniel J. Rau, P.E.

2. No financial interest letter issued by Ruskin Company, dated 08/17/2012, signed and sealed by Daniel J. Rau, P.E.

02/04/2013

Carlos M. Utrera, P.E.
Product Control Examiner
NOA No. 12-0907.03
Expiration Date: February 14, 2018
Approval Date: February 14, 2013

NOTES:

1. THE EME420MD HAS BEEN TESTED IN ACCORDANCE WITH FLORIDA PROTOCOLS TAS-201, 202, & 203 FOR LARGE MISSILE IMPACT, UNIFORM PRESSURE AND CYCLIC WIND PRESSURE.

2. THIS LOUVER SYSTEM IS APPROVED FOR APPLICATIONS WITH DESIGN PRESSURES OF +/- 120 PSF OR LESS.

3. THIS LOUVER SYSTEM IS TO BE INSTALLED IN LOCATIONS WHERE THE ROOMS BEHIND THE LOUVERS ARE DESIGNED TO DRAIN WATER PENETRATING INTO THE ROOMS, AND THE ROOMS WILL HOUSE WATER RESISTANT/WATER PROOF EQUIPMENT, COMPONENTS OR SUPPLIES.

4. THIS LOUVER SYSTEM IS NON-BEARING AND IS NOT DESIGNED TO WITHSTAND BUILDING DEAD LOADS.

5. THIS LOUVER UTILIZES AN ANCHORLESS INSTALLATION METHOD THAT DOES NOT REQUIRE THE USE OF FASTENERS INTO THE WALL SUBSTRATE THAT WILL WITHSTAND THE LOADS TRANSFERRED TO IT BY THE LOUVER. RUSKIN DOES NOT DETERMINE THE STRUCTURAL INTEGRITY OF THE STRUCTURE.

6. MAXIMUM SINGLE SECTION SIZE: 87 15/16" WIDE X 144" HIGH OR 130" WIDE X 112" HIGH.

7. MAXIMUM ASSEMBLED LOUVER SIZE: UNLIMITED WIDE X 144" TALL W SECTION MULLIONS AT 87 7/8" (TRIANGLES ALLOWED) UNLIMITED WIDTH X 144" TALL W/ SECTION MULLIONS AT 104 15/16" W/ NO JAMB ATTACHMENTS, HEAD & SILL ATTACHMENT ONLY, ROUND ASSEMBLIES UP TO 130" DIAMETER.

8. SECTIONS OR ASSEMBLIES MAY BE STACKED VERTICALLY PROVIDING A SUITABLE STRUCTURAL SUPPORT IS DESIGNED AND INSTALLED BY OTHERS TO SUPPORT ALL LOADS TRANSFERRED FROM THE LOUVER.

9. ALL CMU BLOCK MUST BE GROUT FILLED. MIN PRISM STRENGTH OF 1500 PSI AT TIME OF INSTALLATION. CMU BLOCKS MUST BE MIN. TYPE 1, GRADE N, LIGHT, MEDIUM, OR NORMAL WEIGHT PER ASTM C90. GROUT AND MORTAR COMPLY WITH FBC.

10. ABBREVIATION H.D.G. IS HOT DIP GALVANIZED, STL IS STEEL, HWH IS HEX WASHER HEAD, S.D.S. IS SELF-DRILLING SCREW.

11. CARBON STEEL AND OTHER NON-COMPATIBLE METALS CONTACTING ALUMINUM SHALL BE PROTECTED BY PAINT OR OTHER MEANS PER FLORIDA BUILDING CODE SECTION 2003.8.4.2.

DRAWING INDEX:

60-022285-00B SHEET 01 OF 21 - NOTES AND DRAWING INDEX
60-022285-00B SHEET 02 OF 21- ASSEMBLY 'A' & DETAILS
60-022285-00B SHEET 03 OF 21- ASSY 'A' ALT. CONNECTIONS DETAILS
60-022285-00B SHEET 04 OF 21- ASSY 'A' ALT. CONNECTIONS DETAILS
60-022285-00B SHEET 05 OF 21- ASSEMBLY 'B'
60-022285-00B SHEET 06 OF 21- ASSEMBLY 'C'
60-022285-00B SHEET 07 OF 21- ASSEMBLY 'D'
60-022285-00B SHEET 08 OF 21- ASSY 'B, C, & D' DETAILS
60-022285-00B SHEET 09 OF 21- ASSY 'B, C, & D' DETAILS
60-022285-00B SHEET 10 OF 21- ASSY 'B, C, & D' ALT. CONNECTION DETAILS
60-022285-00B SHEET 11 OF 21- ASSY 'B, C, & D' ALT. CONNECTION DETAILS
60-022285-00B SHEET 12 OF 21- ASSEMBLY 'E' & DETAILS
60-022285-00B SHEET 13 OF 21- ASSY 'E' ALT. CONNECTION DETAILS
60-022285-00B SHEET 14 OF 21- ASSY 'E' DETAILS
60-022285-00B SHEET 15 OF 21- ASSEMBLY 'F' & DETAILS
60-022285-00B SHEET 16 OF 21- ASSY 'F' ALT. CONNECTION DETAILS
60-022285-00B SHEET 17 OF 21- ASSY 'F' ALT. CONNECTION DETAILS
60-022285-00B SHEET 18 OF 21- PARTS DETAILS
60-022285-00B SHEET 19 OF 21- PARTS DETAILS
60-022285-00B SHEET 20 OF 21- PARTS DETAILS
60-022285-00B SHEET 21 OF 21- ASSY 'B, C, D, & F' SUPPORT TABLES

ENGINEER OF RECORD
DAN RAU

ENGINEERING DISCIPLINE
CIVIL ENGINEERING

REGISTRATION NUMBER
FL# 63636

DANIEL J. RAU
LICENSE
NO. 63636
STATE OF
FLORIDA
PROFESSIONAL ENGINEER

DEC 12, 12

FOR OFFICE USE ONLY

FOR OFFICE USE ONLY

Approved as complying with the Florida Building Code
Date 02/14/2013
NOA# 12-0907.03
Miami Dade Product Control
By

TOLERANCES
DECIMAL DIMENSIONS:
3 PLACE .XXX +.010
2 PLACE .XX +.020
FRACTION DIMENSIONS: + 1/16
ANGLE DIMENSIONS + 2°
USE WQ-007 & 008
UNLESS SPECIFIED OTHERWISE

DWN. BY: DRP	CHK. BY:	APPV'D. BY:	APPV'D. BY:
DATE: 5/16/12	DATE:	DATE:	DATE:

SHEET 1 OF 21

CHANGE LETTER	REVISION DESCRIPTION	DWN. BY:	CHK'D. BY:	APPV'D. BY:	APPV'D. BY:	DATE
A	REVISED DRAWINGS PER DADE CO. MARKUPS	DRP	RKP	DJR		11/29/12

RUSKIN
Air & Sound Control
3900 DR. GREAVES RD
GRANDVIEW, MO 64030
PROPRIETARY INFORMATION

PLOT SCALE: B

ECN: 4475

TITLE
EME420MD
APPROVAL DRAWINGS

DWG. NO.
60-022285-00B

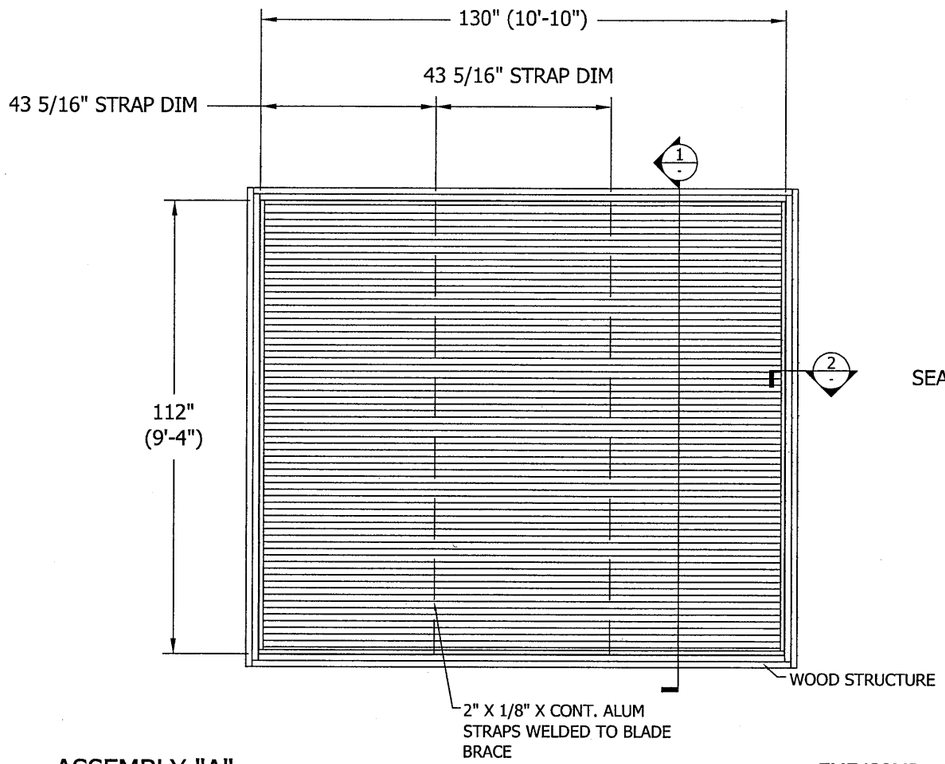

ASSEMBLY "A"

N.T.S.

EME420MD

FRONT VIEW

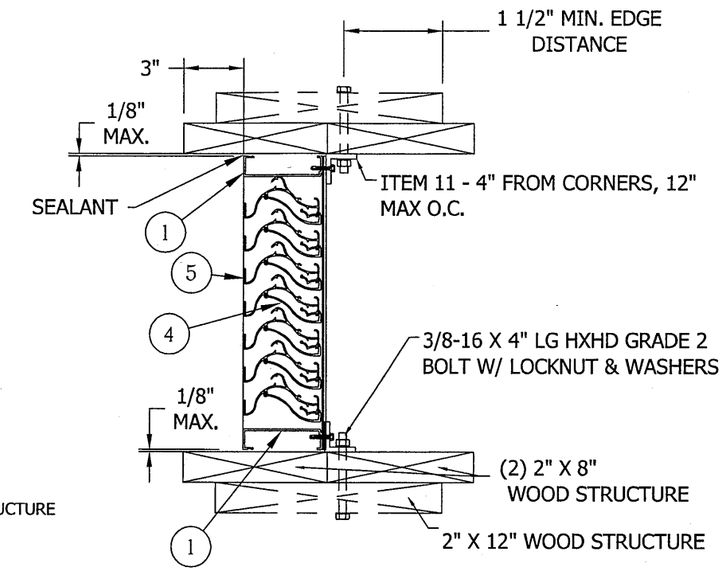

1 / - CLIP ANGLE INSTALLATION

N.T.S.

SECTION VIEW

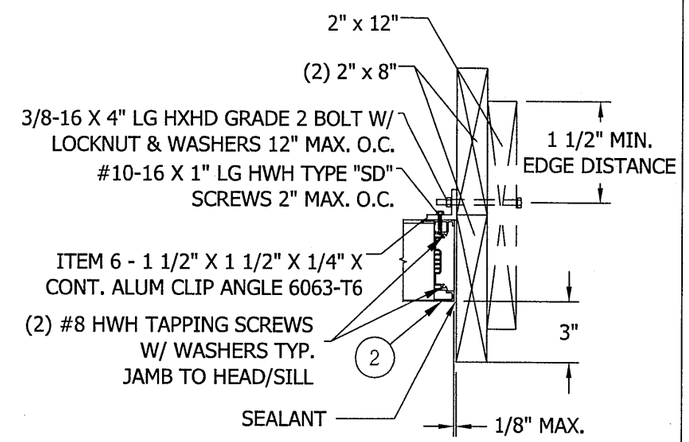

2 / - JAMB ATTACHMENT

N.T.S.

ENGINEER OF RECORD

DAN RAU

ENGINEERING DISCIPLINE

CIVIL ENGINEERING

REGISTRATION NUMBER

FL# 63636

DANIEL J. RAU
LICENSE
NO. 63636
STATE OF
FLORIDA
PROFESSIONAL ENGINEER

DEC 12, 12

FOR OFFICE USE ONLY

FOR OFFICE USE ONLY

Approved as complying with the
Florida Building Code
Date 02/14/2013
NOA# 12-0907.03
Miami Dade Product Control
By

TOLERANCES
DECIMAL DIMENSIONS:
3 PLACE .XXX +.010
2 PLACE .XX +.020
FRACTION DIMENSIONS: +1/16
ANGLE DIMENSIONS + 2°
USE W1Q-007 & 008
UNLESS SPECIFIED OTHERWISE

DWN. BY: DRP	CHK. BY:	APPV'D. BY:	APPV'D. BY:
DATE: 5/16/12	DATE:	DATE:	DATE:

SHEET 2 OF 21

CHANGE LETTER	REVISION DESCRIPTION	DWN. BY:	CHK'D. BY:	APPV'D. BY:	APPV'D. BY:	DATE
A	REVISED DRAWINGS PER DADE CO. MARKUPS	DRP	RKP	DJR		11/29/12

RUSKIN
Air & Sound Control

3900 DR. GREAVES RD
GRANDVIEW, MO 64030

PROPRIETARY INFORMATION

PLOT SCALE: B

ECN: 4475

TITLE: EME420MD
ASSEMBLY 'A' & DETAILS

DWG. NO. 60-022285-00B

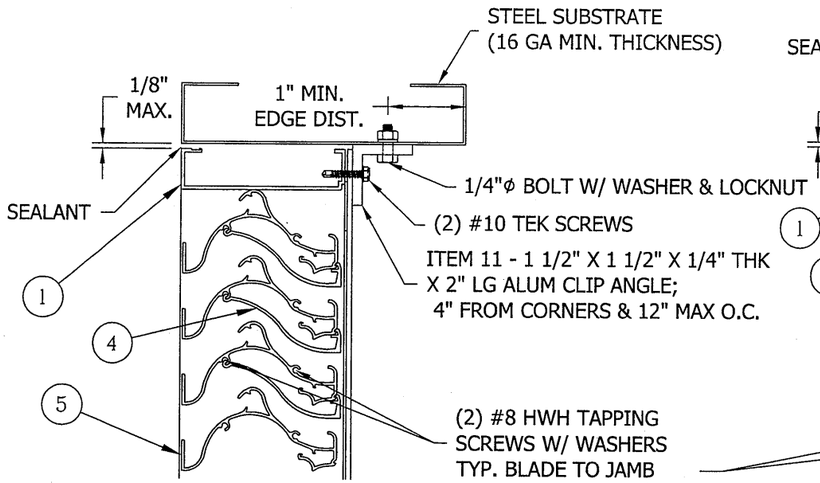

1B / - ASSEMBLY "A" ALTERNATE CONNECTION

N.T.S.
STEEL SUBSTRATE (16 GA MIN. THICKNESS)

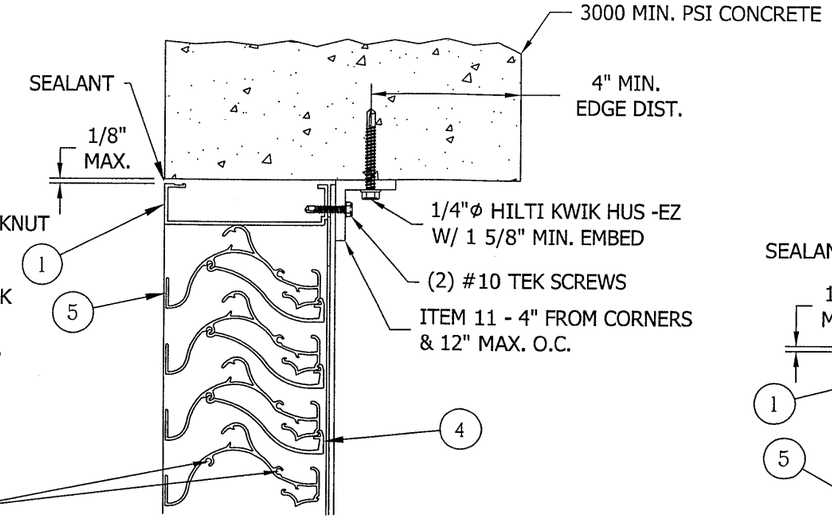

1C / - ASSEMBLY "A" ALTERNATE CONNECTION

N.T.S.
3000 MIN. PSI CONCRETE

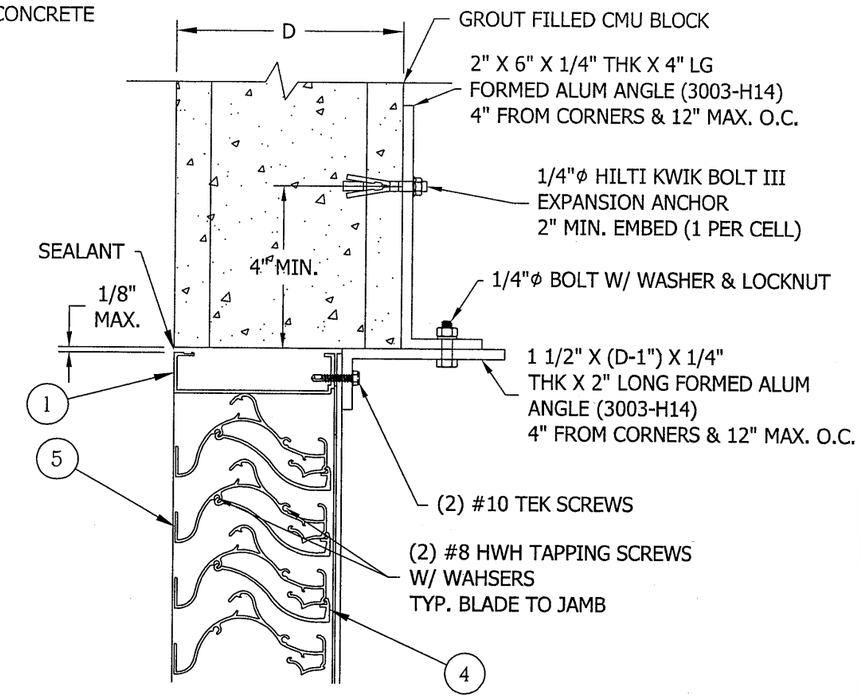

1D / - ASSEMBLY "A" ALTERNATE CONNECTION

N.T.S.
GROUT FILLED CMU BLOCK - REF. NOTE 9

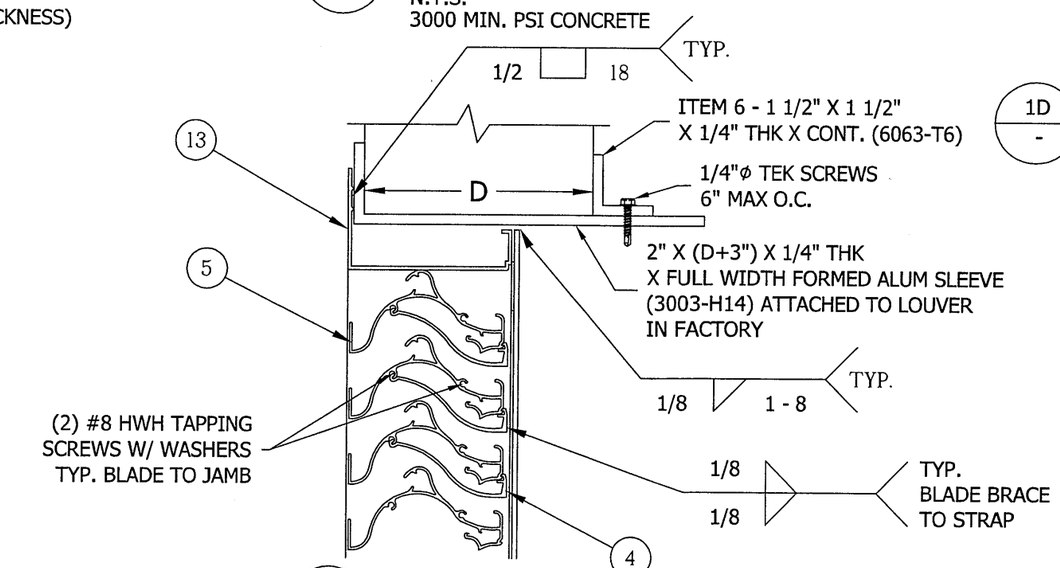

1E / - ASSEMBLY "A" ALTERNATE CONNECTION

N.T.S.
FLANGE FRAME W/ SLEEVE CONDITION

A	REVISED DRAWINGS PER DADE CO. MARKUPS	DRP	RKP	DJR		11/29/12
CHANGE LETTER	REVISION DESCRIPTION	DWN. BY:	CHK'D. BY:	APPV'D. BY:	APPV'D. BY:	DATE

ENGINEER OF RECORD
DAN RAU

ENGINEERING DISCIPLINE
CIVIL ENGINEERING

REGISTRATION NUMBER
FL# 63636

DANIEL J. RAU
LICENSE
NO. 63636
STATE OF FLORIDA
PROFESSIONAL ENGINEER
DEC 12, 12

FOR OFFICE USE ONLY

FOR OFFICE USE ONLY

Approved as complying with the Florida Building Code
Date 02/14/2013
NOA# 12-0907.03
Miami Dade Product Control
By

TOLERANCES
DECIMAL DIMENSIONS:
3 PLACE .XXX +.010
2 PLACE .XX +.020
FRACTION DIMENSIONS: + 1/16
ANGLE DIMENSIONS + 2°
USE W1Q-007 & 008
UNLESS SPECIFIED OTHERWISE

DWN. BY: DRP	CHK. BY:	APPV'D. BY:	APPV'D. BY:
DATE: 5/16/12	DATE:	DATE:	DATE:

SHEET 3 OF 21

RUSKIN
Air & Sound Control
3900 DR. GREAVES RD
GRANDVIEW, MO 64030
PROPRIETARY INFORMATION

PLOT SCALE: B

ECN: 4475

TITLE
EME420MD
ASSEMBLY "A"
ALT. CONNECTION DETAILS

DWG. NO.
60-022285-00B

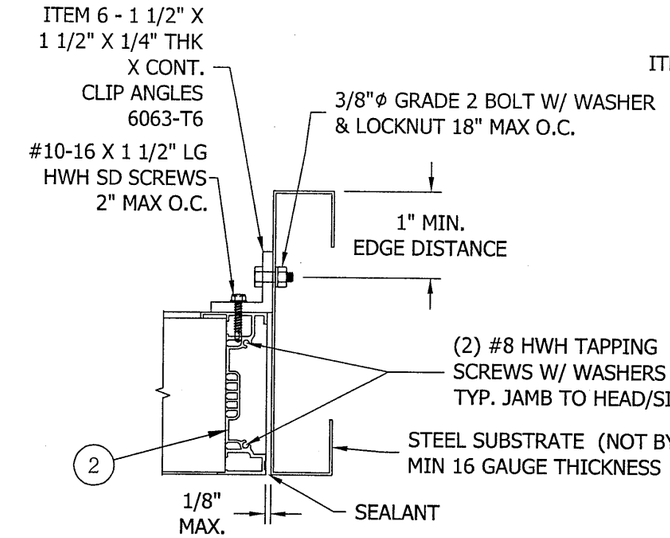

2B / - ASSEMBLY "A" ALTERNATE CONNECTION

N.T.S.
STEEL SUBSTRATE (NOT BY RUSKIN)
MIN. 16 GAUGE THICKNESS

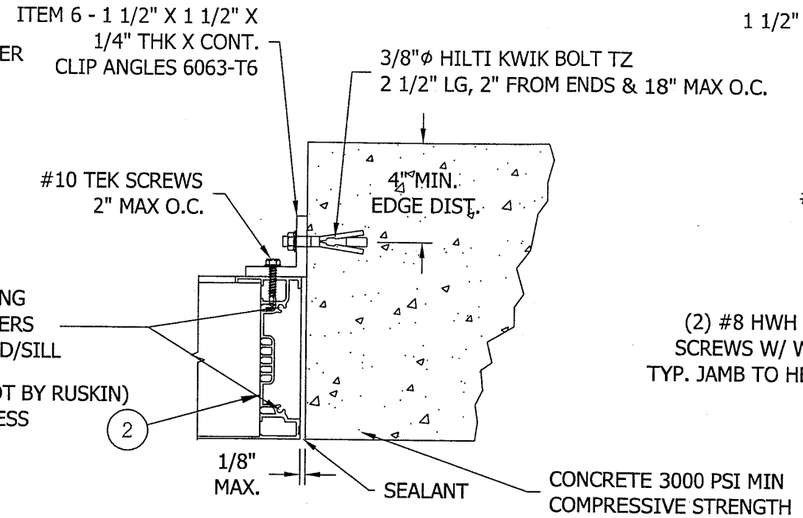

2C / - ASSEMBLY "A" ALTERNATE CONNECTION

N.T.S.
3000 PSI MIN COMPRESSIVE STRENGTH

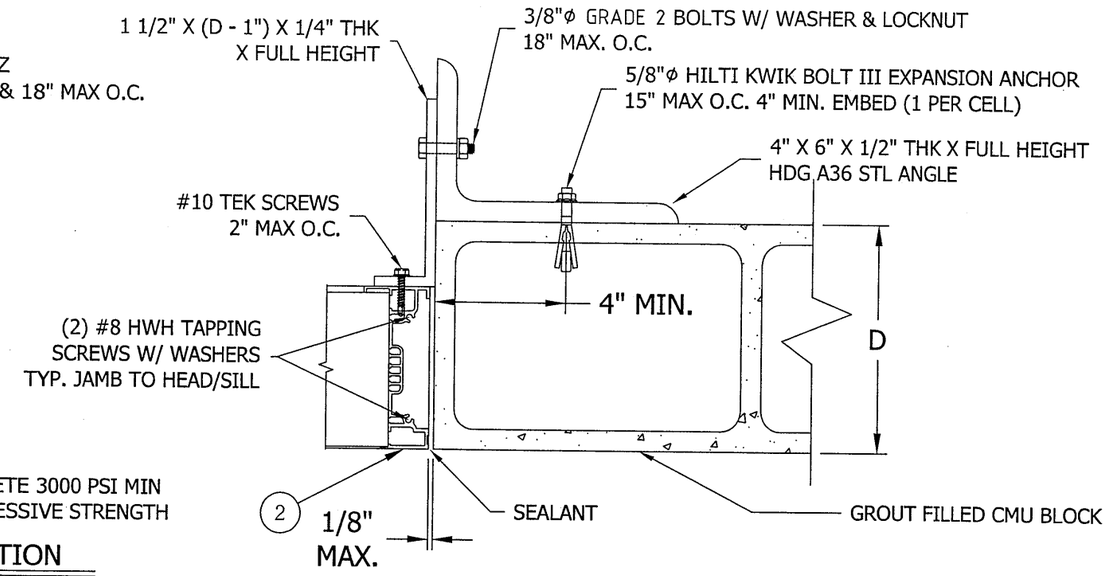

2D / - ASSEMBLY "A" ALTERNATE CONNECTION

N.T.S.
GROUT FILLED CMU BLOCK PER NOTE #9

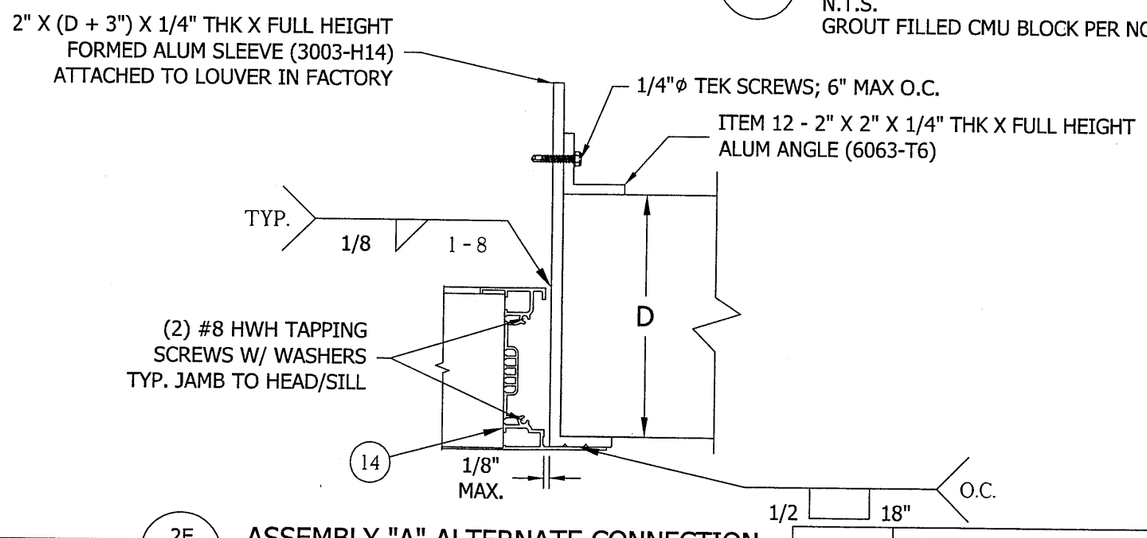

2E / - ASSEMBLY "A" ALTERNATE CONNECTION

N.T.S.
FLANGE FRAME CONNECTION DETAIL

CHANGE LETTER	REVISION DESCRIPTION	DWN. BY:	CHK'D. BY:	APPV'D. BY:	APPV'D. BY:	DATE
A	REVISED DRAWINGS PER DADE CO. MARKUPS	DRP	RKP	DJR		11/29/12

ENGINEER OF RECORD: DAN RAU
ENGINEERING DISCIPLINE: CIVIL ENGINEERING
REGISTRATION NUMBER: FL# 63636

DANIEL J. RAU LICENSE NO. 63636 STATE OF FLORIDA PROFESSIONAL ENGINEER
DEC 12, 12

FOR OFFICE USE ONLY

FOR OFFICE USE ONLY

Approved as complying with the Florida Building Code
Date 02/14/2013
NOA# 12-0907.03
Miami Dade Product Control
By

TOLERANCES
DECIMAL DIMENSIONS:
3 PLACE .XXX ± .010
2 PLACE .XX ± .020
FRACTION DIMENSIONS: ± 1/16
ANGLE DIMENSIONS ± 2°
USE WIQ-007 & 008
UNLESS SPECIFIED OTHERWISE

DWN. BY: DRP	CHK. BY:	APPV'D. BY:	APPV'D. BY:
DATE: 5/16/12	DATE:	DATE:	DATE:

SHEET 4 OF 21

RUSKIN Air & Sound Control
3900 DR. GREAVES RD
GRANDVIEW, MO 64030
PROPRIETARY INFORMATION

PLOT SCALE: B
ECN: 4475

TITLE: EME420MD ASSEMBLY "A" ALT. CONNECTION DETAILS

DWG. NO. 60-022285-00B

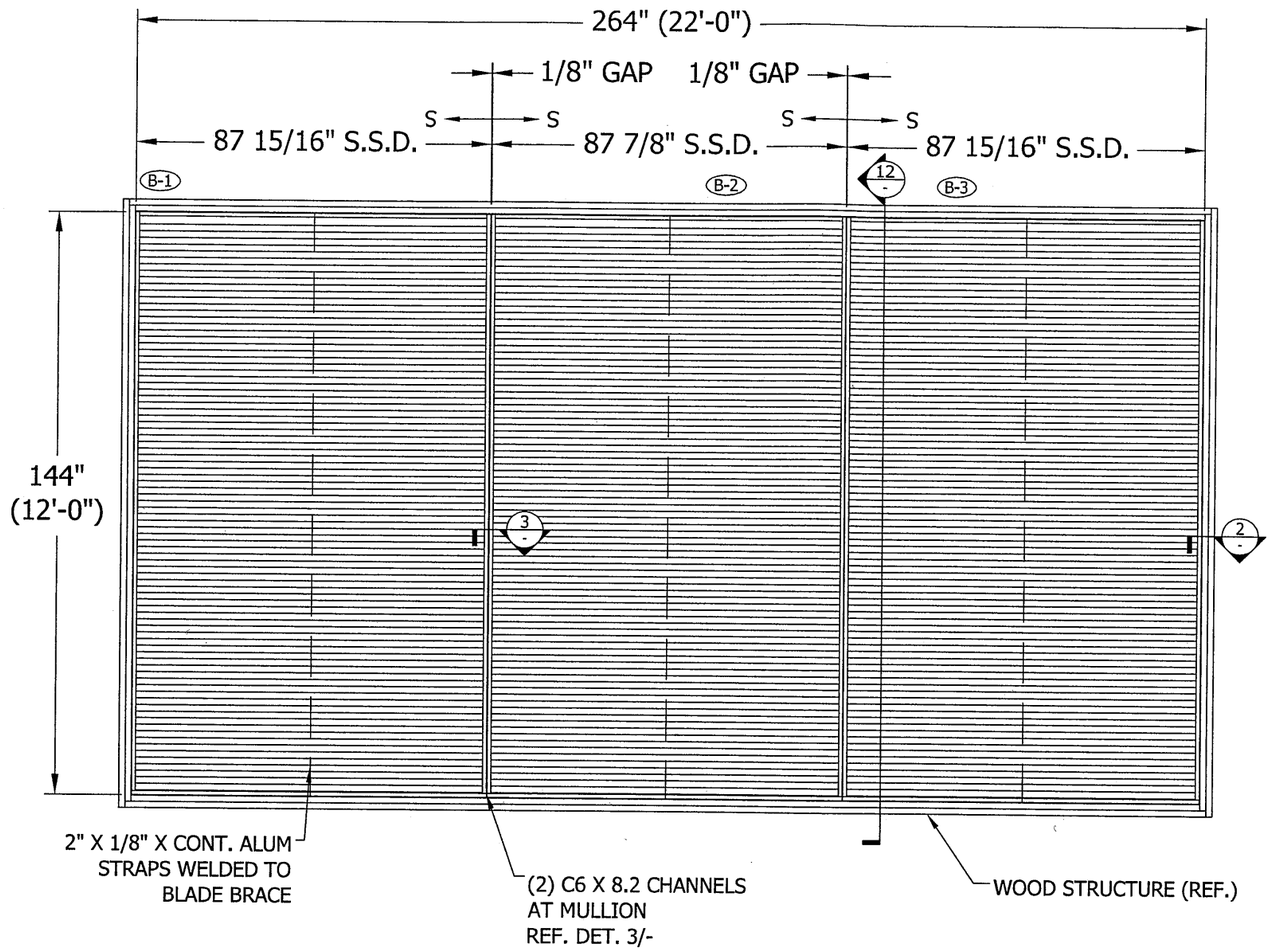

ASSEMBLY "B"

N.T.S.

EME420MD

FRONT VIEW

ENGINEER OF RECORD	DAN RAU
ENGINEERING DISCIPLINE	CIVIL ENGINEERING
REGISTRATION NUMBER	FL# 63636

DANIEL J. RAU
LICENSE
NO. 63636
STATE OF FLORIDA
PROFESSIONAL ENGINEER

DEC 12, 12

FOR OFFICE USE ONLY

FOR OFFICE USE ONLY

Approved as complying with the Florida Building Code
Date 02/14/2013
NOA# 12-0907.03
Miami Dade Product Control
By

TOLERANCES
DECIMAL DIMENSIONS:
3 PLACE .XXX +.010/L
2 PLACE .XX +.020/L
FRACTION DIMENSIONS: + 1/16
ANGLE DIMENSIONS + 2°
USE WIQ-007 & 008
UNLESS SPECIFIED OTHERWISE

DWN. BY: DRP	CHK. BY:	APPV'D. BY:	APPV'D. BY:
DATE: 5/16/12	DATE:	DATE:	DATE:

SHEET 5 OF 21

CHANGE LETTER	REVISION DESCRIPTION	DWN. BY:	CHK'D. BY:	APPV'D. BY:	APPV'D. BY:	DATE
A	REVISED DRAWINGS PER DADE CO. MARKUPS	DRP	RKP	DJR		11/29/12

RUSKIN
Air & Sound Control
3900 DR. GREAVES RD
GRANDVIEW, MO 64030
PROPRIETARY INFORMATION

PLOT SCALE: B

ECN: 4475

TITLE: EME420MD ASSEMBLY 'B'

DWG. NO. 60-022285-00B

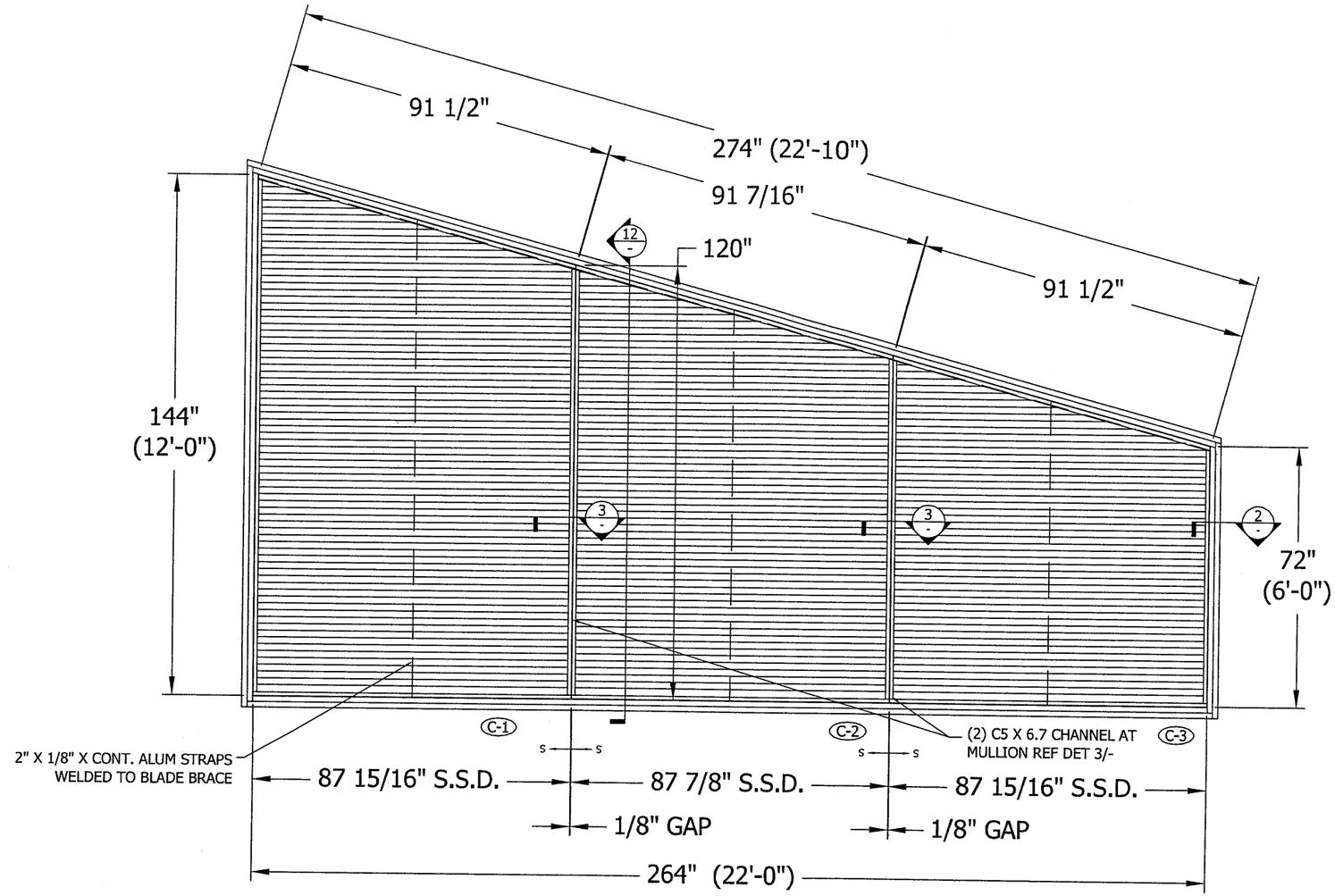

ASSEMBLY "C"

N.T.S.

EME420MD

FRONT VIEW

ENGINEER OF RECORD	DAN RAU
ENGINEERING DISCIPLINE	CIVIL ENGINEERING
REGISTRATION NUMBER	FL# 63636

DANIEL J. RAU
LICENSE
NO. 63636
STATE OF
FLORIDA
PROFESSIONAL ENGINEER

DEC 12 12

FOR OFFICE USE ONLY

FOR OFFICE USE ONLY

Approved as complying with the
Florida Building Code
Date 02/14/2013
NOA# 12-0907.03
Miami Dade Product Control
By

TOLERANCES
DECIMAL DIMENSIONS:
3 PLACE .XXX +.010
2 PLACE .XX +.020
FRACTION DIMENSIONS: + 1/16
ANGLE DIMENSIONS + 2°
USE W1Q-007 & 008
UNLESS SPECIFIED OTHERWISE

DWN. BY:	CHK. BY:	APPV'D. BY:	APPV'D. BY:
DRP			
DATE: 5/16/12	DATE:	DATE:	DATE:

SHEET 6 OF 21

CHANGE LETTER	REVISION DESCRIPTION	DWN. BY:	CHK'D. BY:	APPV'D. BY:	APPV'D. BY:	DATE
A	REVISED DRAWINGS PER DADE CO. MARKUPS	DRP	RKP	DJR		11/29/12

RUSKIN
Air & Sound Control

3900 DR. GREAVES RD
GRANDVIEW, MO 64030

PROPRIETARY INFORMATION

PLOT SCALE: B

ECN: 4475

TITLE: EME420MD
ASSEMBLY 'C'

DWG. NO. 60-022285-00B

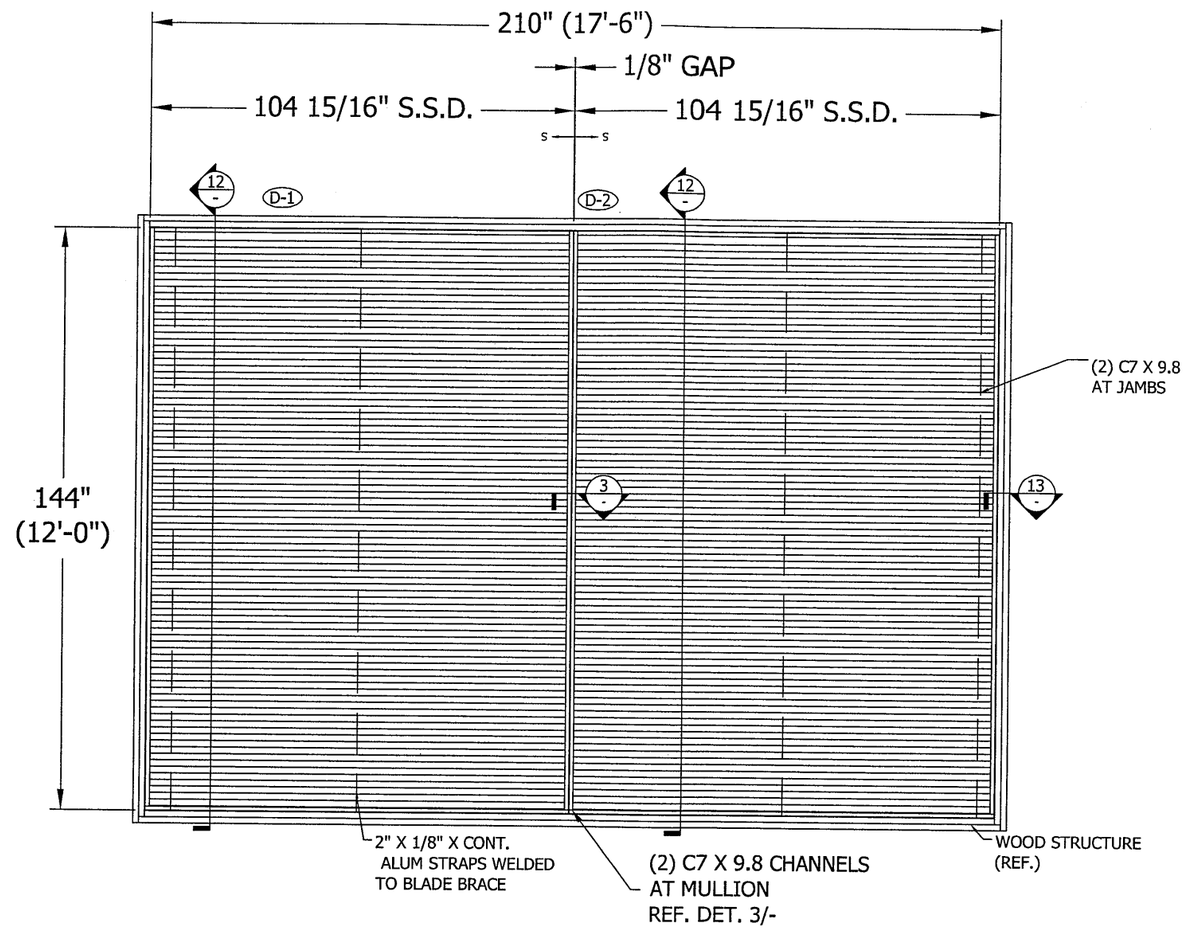

ASSEMBLY "D"

N.T.S.

EME420MD

FRONT VIEW

ENGINEER OF RECORD	DAN RAU
ENGINEERING DISCIPLINE	CIVIL ENGINEERING
REGISTRATION NUMBER	FL# 63636

DANIEL J. RAU
LICENSE
NO. 63636
STATE OF
FLORIDA
PROFESSIONAL ENGINEER

DEC 12, 12

FOR OFFICE USE ONLY

FOR OFFICE USE ONLY

Approved as complying with the
Florida Building Code
Date 02/14/2013
NOA# 12-0907.03
Miami Dade Product Control
By

TOLERANCES
DECIMAL DIMENSIONS:
3 PLACE .XXX +.010
2 PLACE .XX +.020
FRACTION DIMENSIONS: + 1/16
ANGLE DIMENSIONS + 2°
USE W1Q-007 & 008
UNLESS SPECIFIED OTHERWISE

DWN. BY:	CHK. BY:	APPV'D. BY:	APPV'D. BY:
DRP			
DATE: 5/16/12	DATE:	DATE:	DATE:

SHEET 7 OF 21

CHANGE LETTER	REVISION DESCRIPTION	DWN. BY:	CHK'D. BY:	APPV'D. BY:	APPV'D. BY:	DATE
A	REVISED DRAWINGS PER DADE CO. MARKUPS	DRP	RKP	DJR		11/29/12

RUSKIN
Air & Sound Control

3900 DR. GREAVES RD
GRANDVIEW, MO 64030

PROPRIETARY INFORMATION

PLOT SCALE: B

ECN: 4475

TITLE: EME420MD ASSEMBLY 'D'

DWG. NO. 60-022285-00B

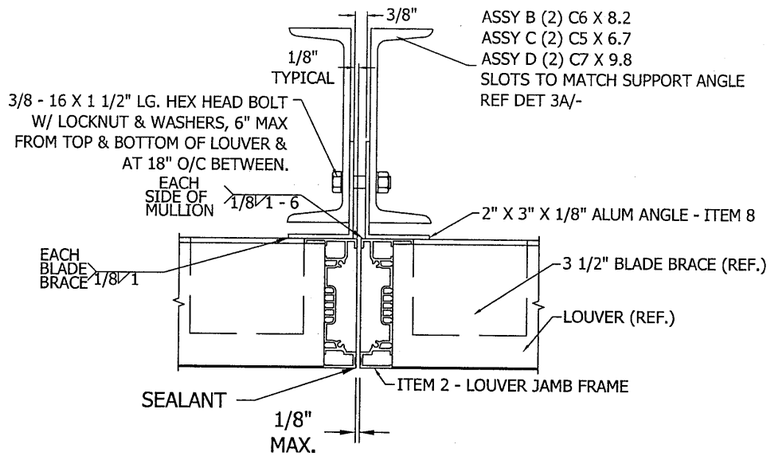

3 / - VISIBLE MULLION SUPPORT DETAIL

N.T.S.
ATTACHMENT CLIPS NOT SHOWN FOR CLARITY

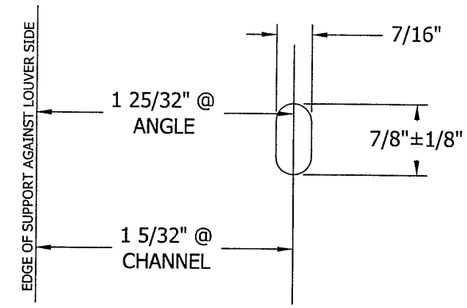

3A / - SLOT DETAIL

N.T.S.

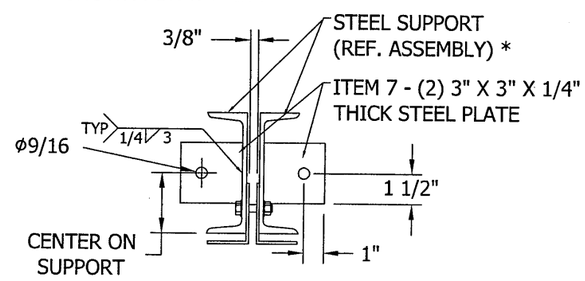

4 / - MULLION SUPPORT ATTACHMENT PLATE

N.T.S.
WOOD STRUCTURE

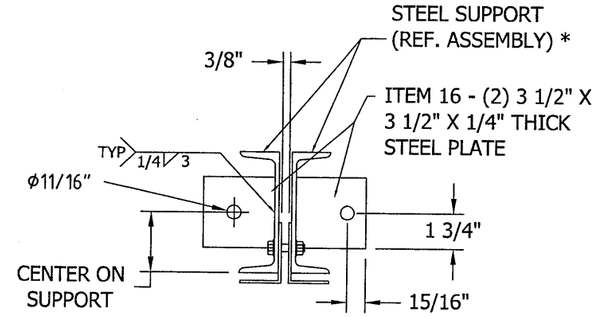

4A / - MULLION SUPPORT ATTACHMENT PLATE

N.T.S.
STEEL, CONCRETE, & CMU STRUCTURE

* NOTE:
FOR SMALLER ASSEMBLIES
REFERENCE SUPPORT TABLES ON
SHEET 21 OF 21

ENGINEER OF RECORD
DAN RAU
ENGINEERING DISCIPLINE
CIVIL ENGINEERING
REGISTRATION NUMBER
FL# 63636

DANIEL J. RAU
LICENSE
NO. 63636
STATE OF
FLORIDA
PROFESSIONAL ENGINEER
DEC 12, 12

FOR OFFICE USE ONLY

FOR OFFICE USE ONLY

Approved as complying with the
Florida Building Code
Date 02/14/2013
NOA# 12-0907.03
Miami Dade Product Control
By

TOLERANCES
DECIMAL DIMENSIONS:
3 PLACE .XXX +.010_
2 PLACE .XX +.020_
FRACTION DIMENSIONS: + 1/16
ANGLE DIMENSIONS + 2°_
USE W1Q-007 & 008
UNLESS SPECIFIED OTHERWISE

DWN. BY: DRP	CHK. BY:	APPV'D. BY:	APPV'D. BY:
DATE: 5/16/12	DATE:	DATE:	DATE:

SHEET 8 OF 21

CHANGE LETTER	REVISION DESCRIPTION	DWN. BY:	CHK'D. BY:	APPV'D. BY:	APPV'D. BY:	DATE
A	REVISED DRAWINGS PER DADE CO. MARKUPS	DRP	RKP	DJR		11/29/12

RUSKIN
Air & Sound Control
3900 DR. GREAVES RD
GRANDVIEW, MO 64030
PROPRIETARY INFORMATION

PLOT SCALE: B
ECN: 4475

TITLE
EME420MD
ASSEMBLY 'B, C, & D' DETAILS

DWG. NO.
60-022285-00B

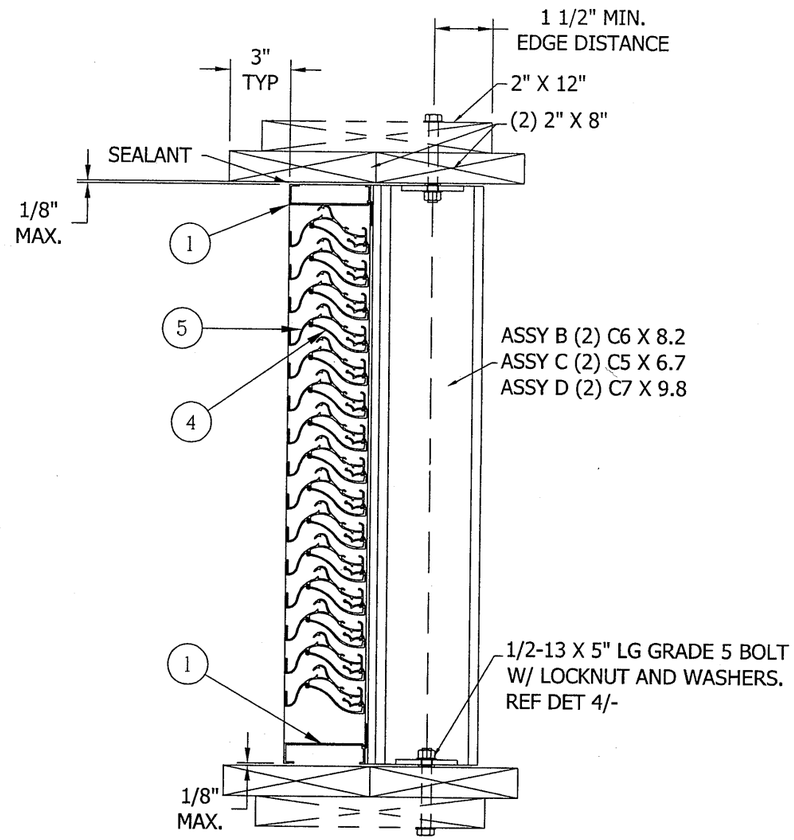

12 - MULLION SUPPORT ATTACHMENT EME420MD

N.T.S. SECTION VIEW

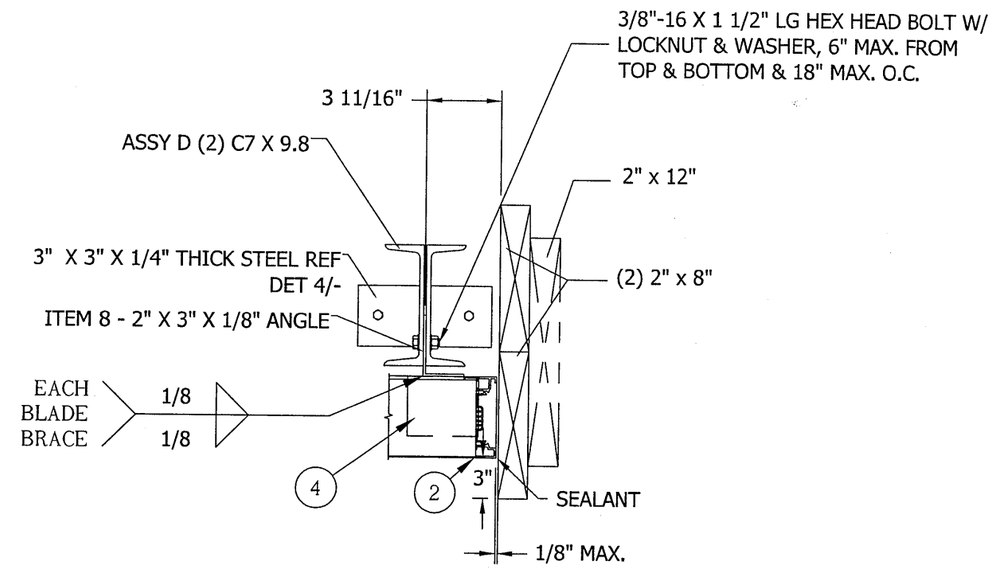

13 - JAMB INSTALLATION (ASSEMBLY 'D' ONLY)

N.T.S.
OPPOSITE JAMB SIMILAR

ENGINEER OF RECORD	DAN RAU
ENGINEERING DISCIPLINE	CIVIL ENGINEERING
REGISTRATION NUMBER	FL# 63636

DANIEL J. RAU
LICENSE
NO. 63636
STATE OF
FLORIDA
PROFESSIONAL ENGINEER
Dec 12, 12

FOR OFFICE USE ONLY

FOR OFFICE USE ONLY

Approved as complying with the
Florida Building Code
Date 02/14/2013
NOA# 12-0907.03
Miami Dade Product Control
By

TOLERANCES
DECIMAL DIMENSIONS:
3 PLACE .XXX +.010_
2 PLACE .XX +.020_
FRACTION DIMENSIONS: + 1/16
ANGLE DIMENSIONS + 2°_
USE WIO-007 & 008
UNLESS SPECIFIED OTHERWISE

DWN. BY: DRP	CHK. BY:	APPV'D. BY:	APPV'D. BY:
DATE: 5/16/12	DATE:	DATE:	DATE:

SHEET 9 OF 21

CHANGE LETTER	REVISION DESCRIPTION	DWN. BY:	CHK'D. BY:	APPV'D. BY:	APPV'D. BY:	DATE
A	REVISED DRAWINGS PER DADE CO. MARKUPS	DRP	RKP	DJR		11/29/12

RUSKIN
Air & Sound Control
3900 DR. GREAVES RD
GRANDVIEW, MO 64030
PROPRIETARY INFORMATION

PLOT SCALE: B

ECN: 4475

TITLE: EME420MD
ASSEMBLY 'B, C, & D' DETAILS

DWG. NO. 60-022285-00B

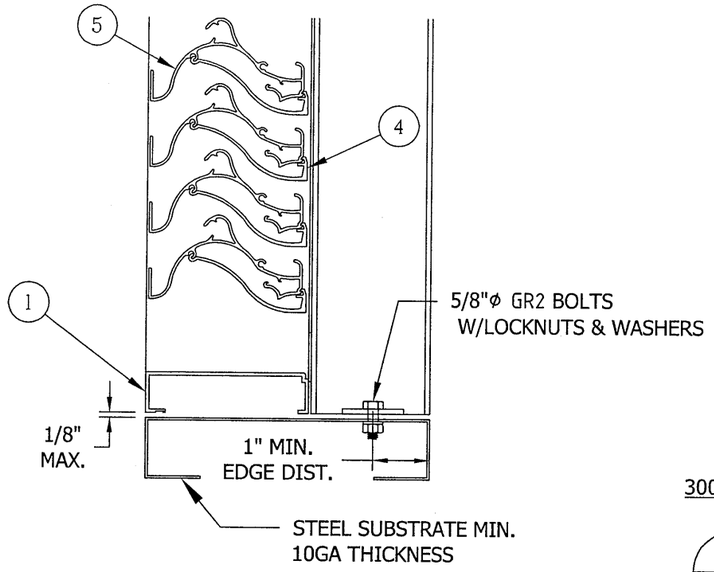

12A / - MULLION SUPPORT ATTACHMENT - STEEL STRUCTURE

N.T.S.
STEEL SUBSTRATE
MIN. 10GA THICKNESS

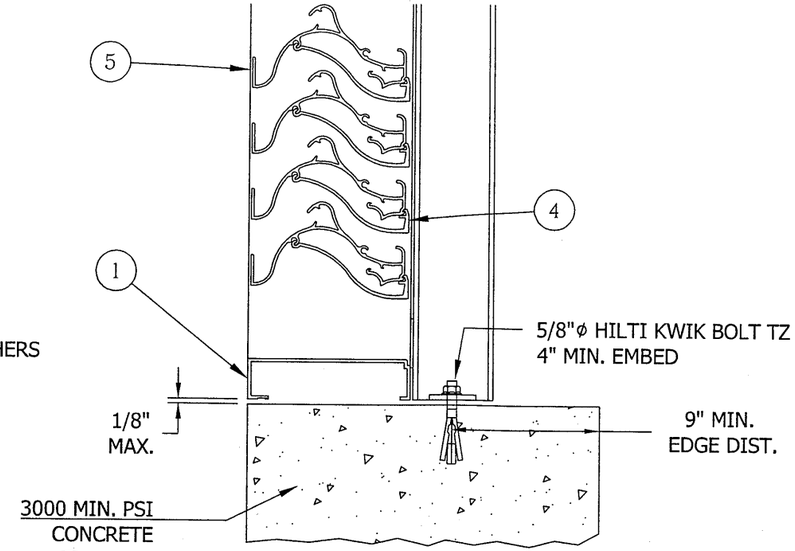

12B / - MULLION SUPPORT ATTACHMENT - CONCRETE STRUCTURE

N.T.S.
MIN. 3000 PSI CONCRETE

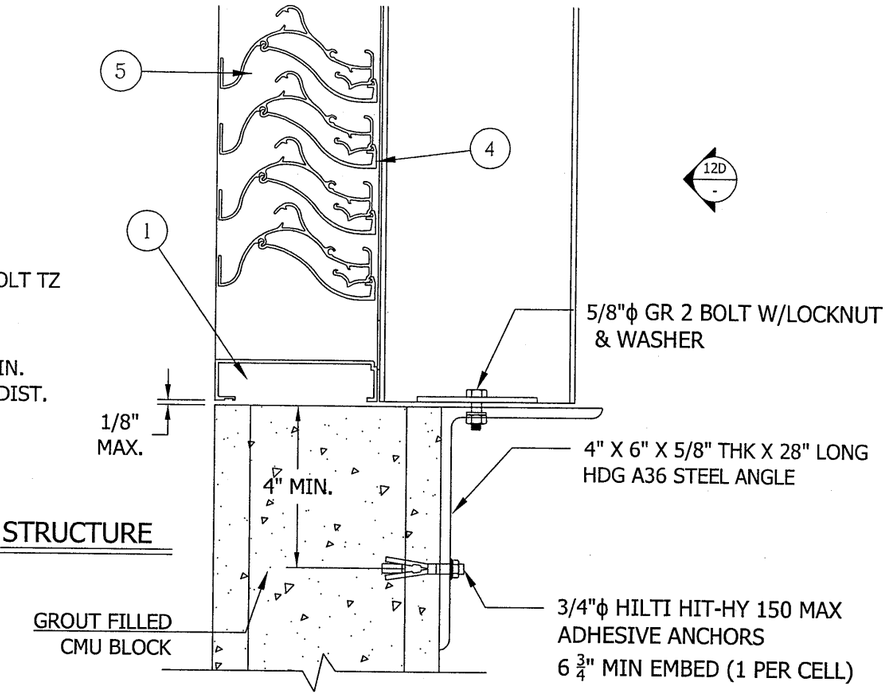

12C / - MULLION SUPPORT - CMU STRUCTURE

N.T.S.
GROUT FILLED CMU REF. NOTE 9

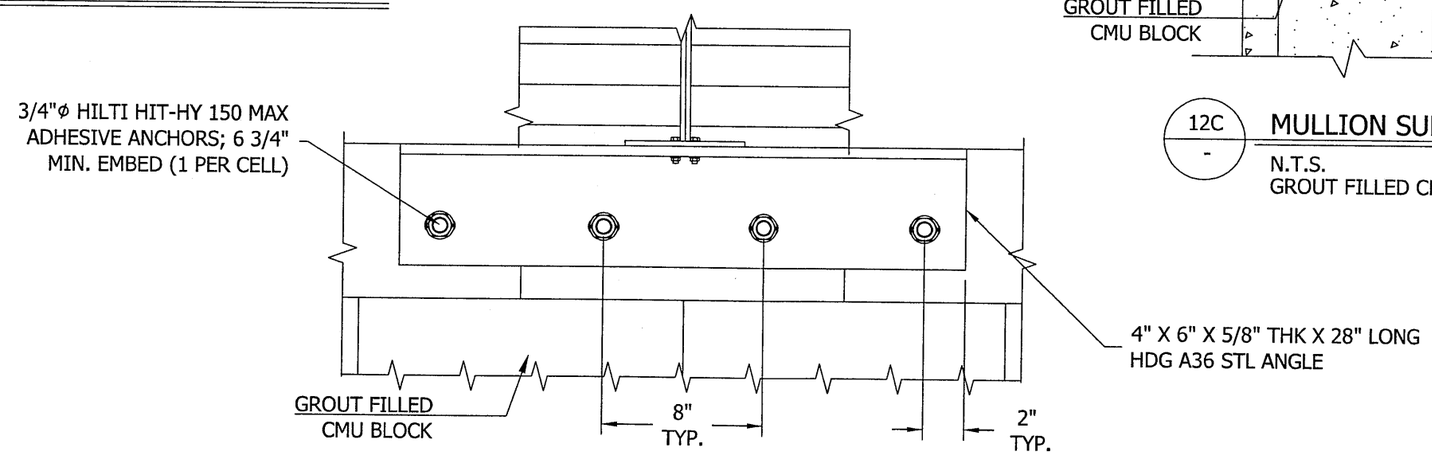

12D / - MULLION SUPPORT ATTACHMENT - CMU STRUCTURE REAR

N.T.S.
GROUT FILLED CMU - REF. NOTE 9

ENGINEER OF RECORD	DAN RAU
ENGINEERING DISCIPLINE	CIVIL ENGINEERING
REGISTRATION NUMBER	FL# 63636

DANIEL J. RAU
LICENSE
NO. 63636
STATE OF
FLORIDA
PROFESSIONAL ENGINEER
DEC 12, 12

FOR OFFICE USE ONLY

FOR OFFICE USE ONLY

Approved as complying with the
Florida Building Code
Date 02/14/2013
NOA# 12-0907.03
Miami Dade Product Control
By

TOLERANCES
DECIMAL DIMENSIONS:
3 PLACE .XXX +.010,
2 PLACE .XX +.020,
FRACTION DIMENSIONS: + 1/16
ANGLE DIMENSIONS + 2°
USE WIQ-007 & 008
UNLESS SPECIFIED OTHERWISE

DWN. BY: KEK	CHK. BY:	APPV'D. BY:	APPV'D. BY:
DATE: 06/14/2012	DATE:	DATE:	DATE:

SHEET 10 OF 21

CHANGE LETTER	REVISION DESCRIPTION	DWN. BY:	CHK'D. BY:	APPV'D. BY:	APPV'D. BY:	DATE
A	REVISED DRAWINGS PER DADE CO. MARKUPS	DRP	RKP	DJR		11/29/12

RUSKIN
Air & Sound Control
3900 DR. GREAVES RD
GRANDVIEW, MO 64030
PROPRIETARY INFORMATION

PLOT SCALE: B
ECN: 4475

TITLE
EME420MD
ASSEMBLY 'B, C, & D'
ALT. CONNECTION DETAILS

DWG. NO.
60-022285-00B

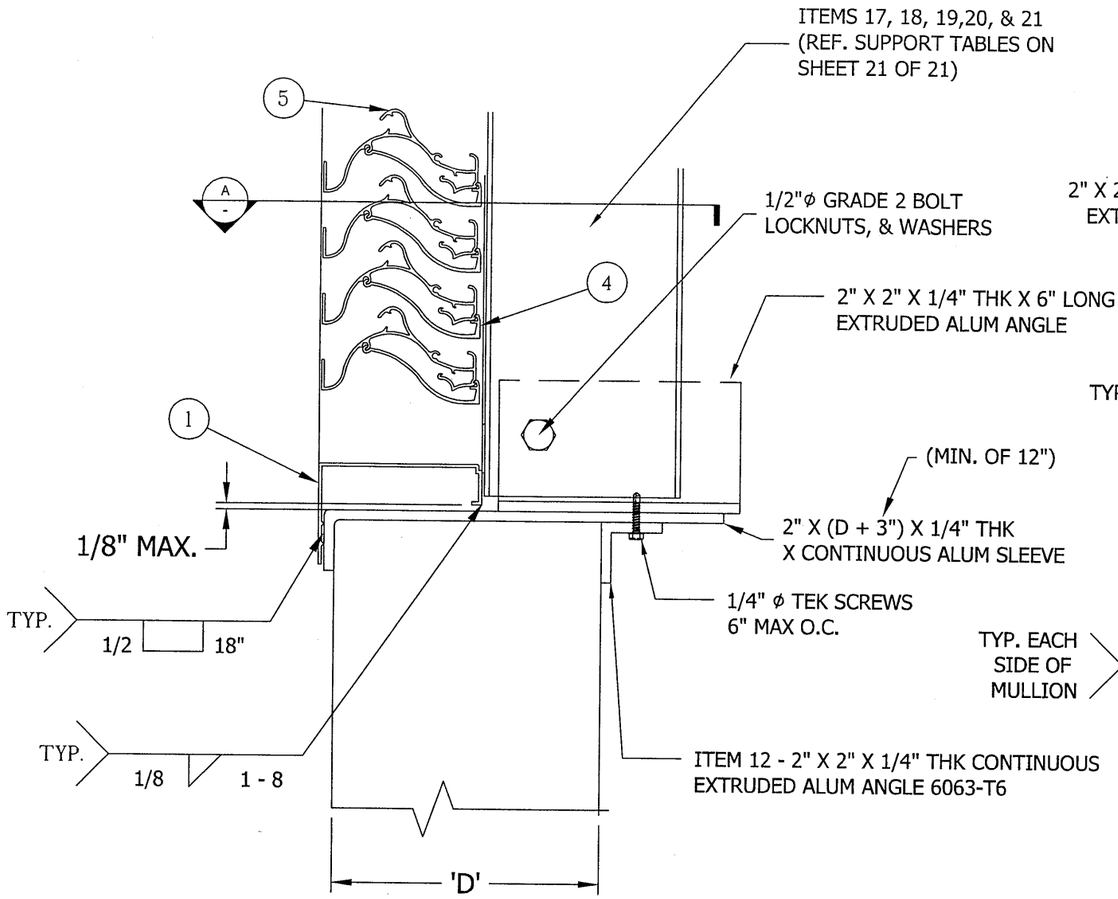

12E
-

ASSEMBLY "B,C,D" ALTERNATE CONNECTION

N.T.S.
FLANGE FRAME CONNECTION DETAIL

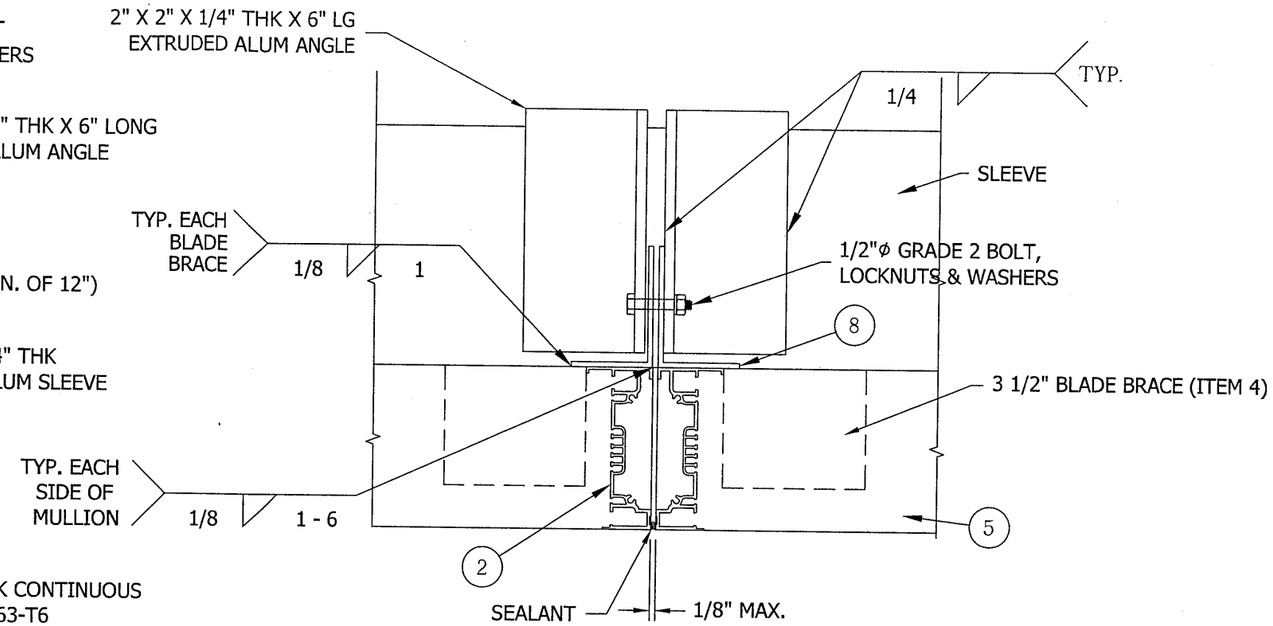

A
-

ASSEMBLY "B,C,D" ALTERNATE CONNECTION

N.T.S.
CHANNELS NOT SHOWN FOR CLARITY

ENGINEER OF RECORD
DAN RAU

ENGINEERING DISCIPLINE
CIVIL ENGINEERING

REGISTRATION NUMBER
FL# 63636

DANIEL J. RAU
LICENSE
NO. 63636
STATE OF
FLORIDA
PROFESSIONAL ENGINEER
DEC 12 12

FOR OFFICE USE ONLY

FOR OFFICE USE ONLY

Approved as complying with the
Florida Building Code
Date 02/14/2013
NOA# 12-0907.03
Miami Dade Product Control
By

TOLERANCES
DECIMAL DIMENSIONS:
3 PLACE .XXX +.010
2 PLACE .XX +.020
FRACTION DIMENSIONS: + 1/16
ANGLE DIMENSIONS + 2°
USE WKQ-007 & 008
UNLESS SPECIFIED OTHERWISE

DWN. BY: KEK	CHK. BY:	APPV'D. BY:	APPV'D. BY:
DATE: 06/14/2012	DATE:	DATE:	DATE:

SHEET 11 OF 21

CHANGE LETTER	REVISION DESCRIPTION	DWN. BY:	CHK'D. BY:	APPV'D. BY:	APPV'D. BY:	DATE
A	REVISED DRAWINGS PER DADE CO. MARKUPS	DRP	RKP	DJR		11/29/12

RUSKIN
Air & Sound Control
3900 DR. GREAVES RD
GRANDVIEW, MO 64030
PROPRIETARY INFORMATION

PLOT SCALE: B

ECN: 4475

TITLE
EME420MD
ASSEMBLY 'B, C, & D'
ALT. CONNECTION DETAILS

DWG. NO.
60-022285-00B

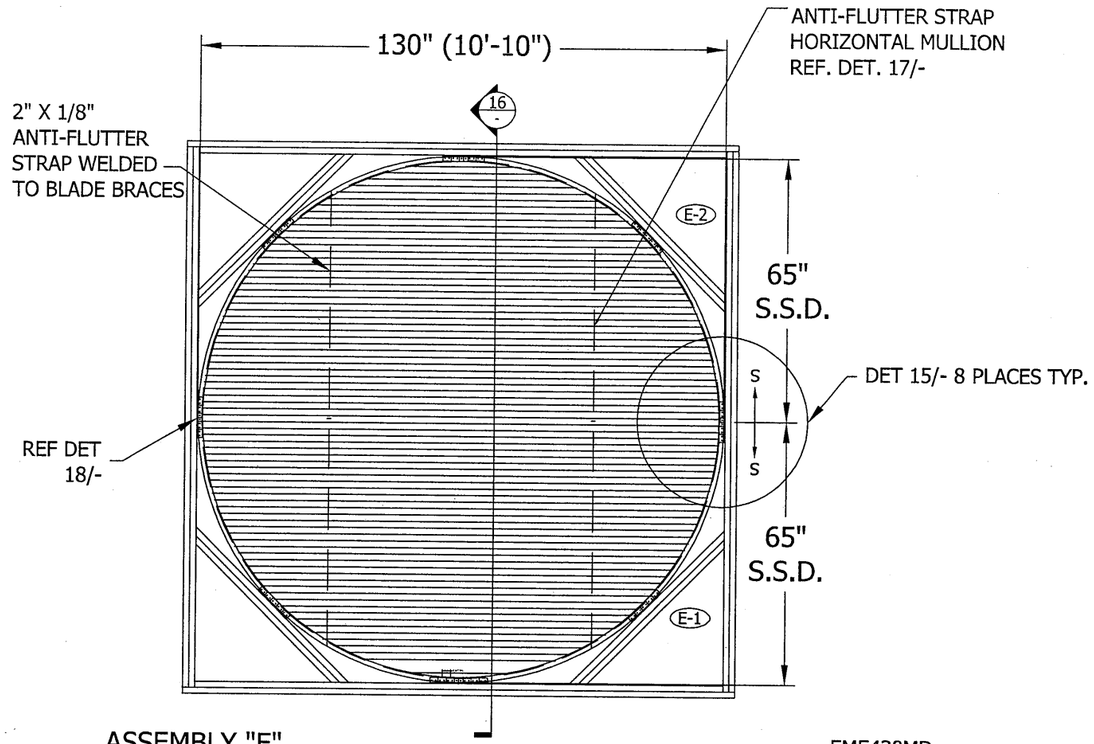

ASSEMBLY "E"

N.T.S.

EME420MD

FRONT VIEW

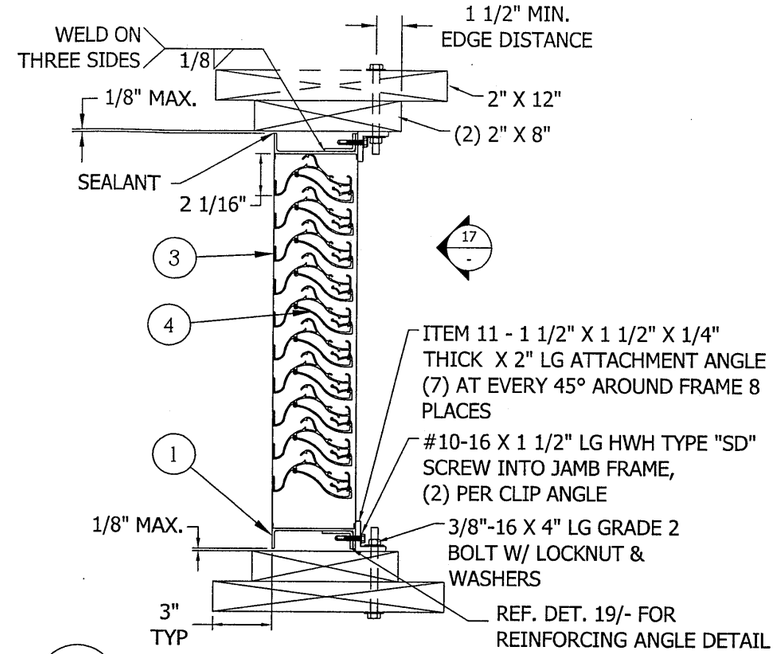

16 / - VERTICAL SECTION DETAIL EME420MD

N.T.S.

SECTION VIEW

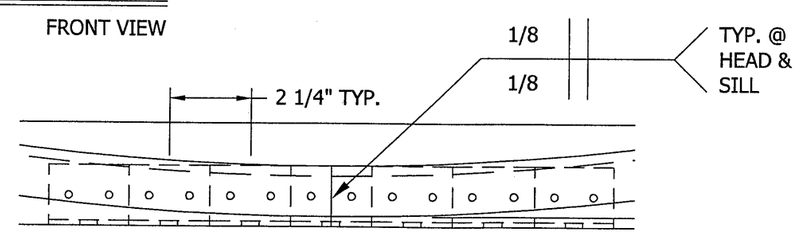

15 / - LOUVER ATTACHMENT DETAIL EME420MD

N.T.S.

FACE VIEW

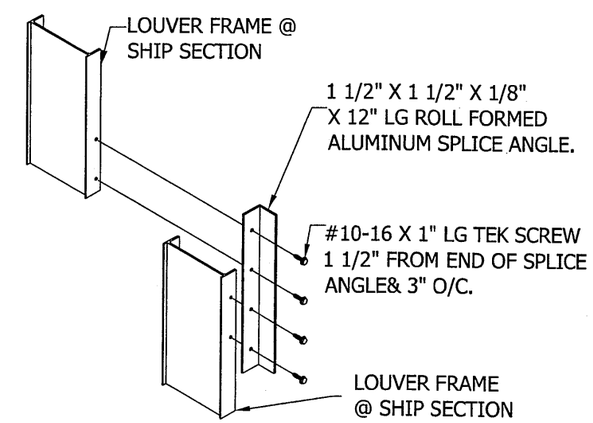

18 / - JAMB SPLICE DETAIL EME420MD

N.T.S.

FACE VIEW

ENGINEER OF RECORD
DAN RAU

ENGINEERING DISCIPLINE
CIVIL ENGINEERING

REGISTRATION NUMBER
FL# 63636

DANIEL J. RAU
LICENSE
NO. 63636
STATE OF
FLORIDA
PROFESSIONAL ENGINEER

DEC/2012

FOR OFFICE USE ONLY

FOR OFFICE USE ONLY

Approved as complying with the
Florida Building Code
Date 02/14/2013
NOA# 12-0907.03
Miami Dade Product Control
By

CHANGE LETTER	REVISION DESCRIPTION	DWN. BY:	CHK'D. BY:	APPV'D. BY:	APPV'D. BY:	DATE
A	REVISED DRAWINGS PER DADE CO. MARKUPS	DRP	RKP	DJR		11/29/12

TOLERANCES
DECIMAL DIMENSIONS:
3 PLACE .XXX +.010
2 PLACE .XX +.020
FRACTION DIMENSIONS: + 1/16
ANGLE DIMENSIONS + 2°
USE WKQ-007 & 008
UNLESS SPECIFIED OTHERWISE

DWN. BY:	CHK. BY:	APPV'D. BY:	APPV'D. BY:
DRP			
DATE: 5/16/12	DATE:	DATE:	DATE:

SHEET 12 OF 21

RUSKIN
Air & Sound Control

3900 DR. GREAVES RD
GRANDVIEW, MO 64030

PROPRIETARY INFORMATION

PLOT SCALE: B

ECN: 4475

TITLE
EME420MD
ASSEMBLY 'E' & DETAILS

DWG. NO.
60-022285-00B

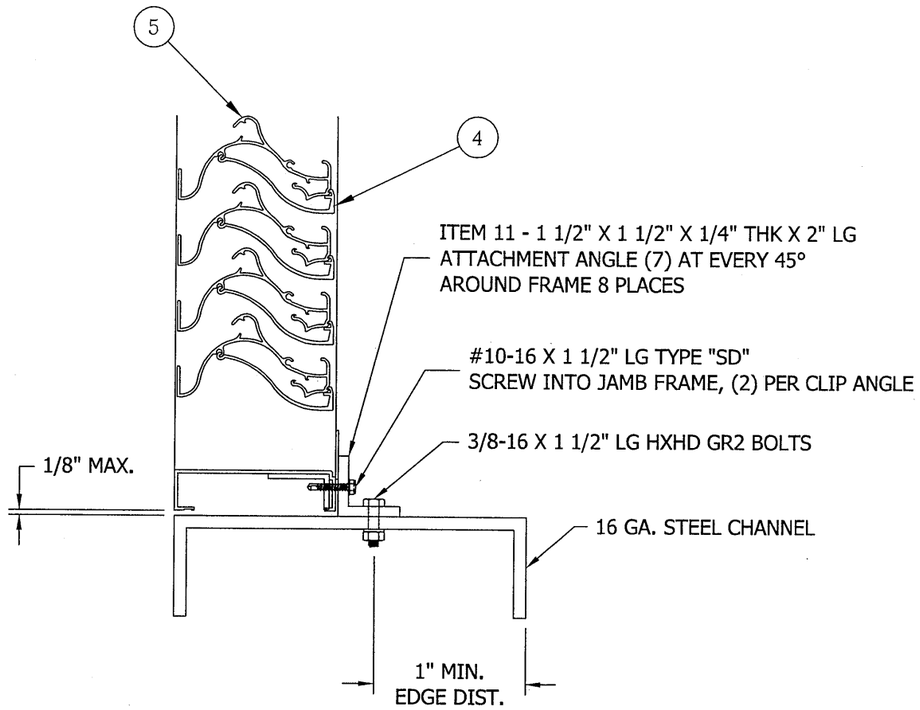

16B - ASSEMBLY 'E' STEEL STRUCTURE EME420MD

N.T.S.
MIN. 16 GA THICKNESS

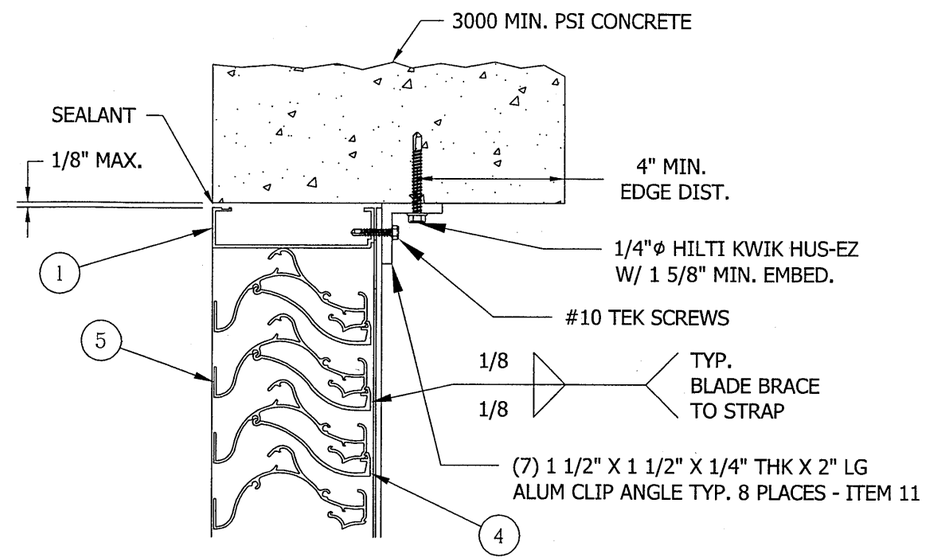

16C - ASSEMBLY "E" CONCRETE STRUCTURE

N.T.S.
MIN 3000 PSI CONCRETE

ENGINEER OF RECORD
DAN RAU

ENGINEERING DISCIPLINE
CIVIL ENGINEERING

REGISTRATION NUMBER
FL# 63636

DANIEL J. RAU
LICENSE
NO. 63636
STATE OF
FLORIDA
PROFESSIONAL ENGINEER

DEC 12, 12

FOR OFFICE USE ONLY

FOR OFFICE USE ONLY

Approved as complying with the
Florida Building Code
Date 02/14/2013
NOA# 12-0907.03
Miami Dade Product Control
By

TOLERANCES
DECIMAL DIMENSIONS:
3 PLACE .XXX +.010_
2 PLACE .XX +.020_
FRACTION DIMENSIONS: + 1/16
ANGLE DIMENSIONS + 2°_
USE WIQ-007 & 008
UNLESS SPECIFIED OTHERWISE

DWN. BY: DRP	CHK. BY:	APPV'D. BY:	APPV'D. BY:
DATE: 5/16/12	DATE:	DATE:	DATE:

SHEET 13 OF 21

CHANGE LETTER	REVISION DESCRIPTION	DWN. BY:	CHK'D. BY:	APPV'D. BY:	APPV'D. BY:	DATE
A	REVISED DRAWINGS PER DADE CO. MARKUPS	DRP	RKP	DJR		11/29/12

RUSKIN
Air & Sound Control

3900 DR. GREAVES RD
GRANDVIEW, MO 64030
PROPRIETARY INFORMATION

PLOT SCALE
B

ECN: 4475

TITLE
EME420MD
ASSEMBLY 'E'
ALT. CONNECTION DETAILS

DWG. NO.
60-022285-00B

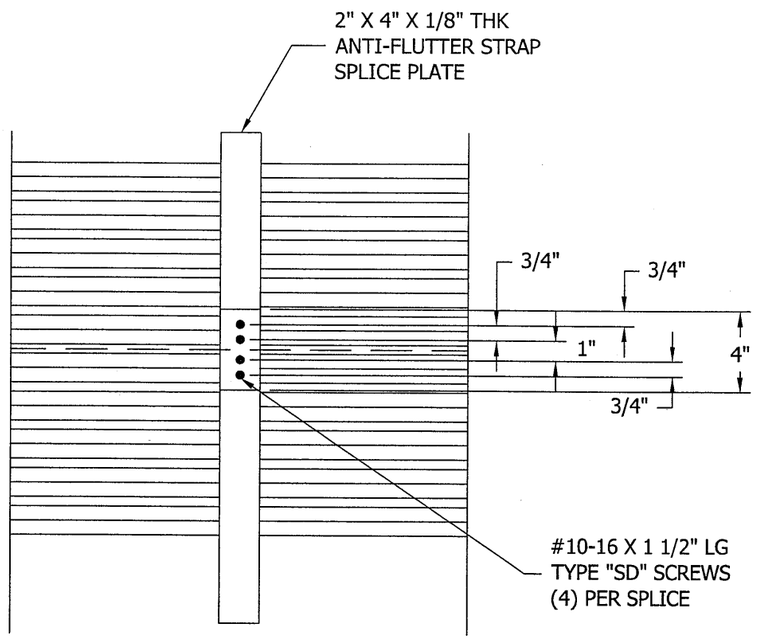

17 / - ANTI FLUTTER STRAP HORIZONTAL MULLION — EME420MD

N.T.S. — SECTION VIEW

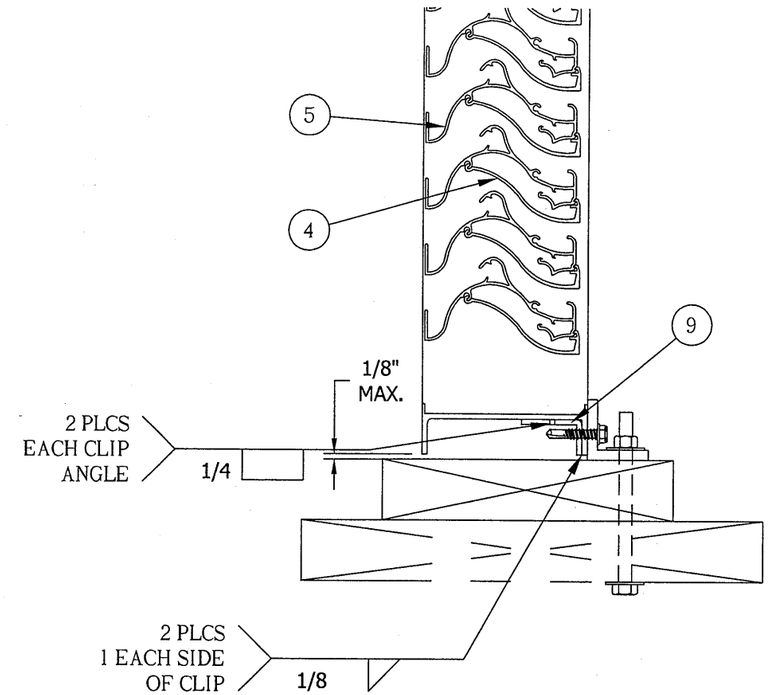

19 / - REINFORCING ANGLE WELD DETAIL

N.T.S.

ENGINEER OF RECORD	DAN RAU
ENGINEERING DISCIPLINE	CIVIL ENGINEERING
REGISTRATION NUMBER	FL# 63636

DANIEL J. RAU — LICENSE NO. 63636 — STATE OF FLORIDA — PROFESSIONAL ENGINEER

DEC 12, 12

FOR OFFICE USE ONLY

FOR OFFICE USE ONLY

Approved as complying with the Florida Building Code
Date 02/14/2013
NOA# 12-0907.03
Miami Dade Product Control
By

TOLERANCES
DECIMAL DIMENSIONS:
3 PLACE .XXX +.010_
2 PLACE .XX +.020_
FRACTION DIMENSIONS: + 1/16
ANGLE DIMENSIONS + 2° _
USE W1Q-007 & 008
UNLESS SPECIFIED OTHERWISE

DWN. BY: KEK	CHK. BY:	APPV'D. BY:	APPV'D. BY:
DATE: 06/15/2012	DATE:	DATE:	DATE:

SHEET 14 OF 21

CHANGE LETTER	REVISION DESCRIPTION	DWN. BY:	CHK'D. BY:	APPV'D. BY:	APPV'D. BY:	DATE
A	REVISED DRAWINGS PER DADE CO. MARKUPS	DRP	RKP	DJR		11/29/12

RUSKIN — Air & Sound Control
3900 DR. GREAVES RD
GRANDVIEW, MO 64030
PROPRIETARY INFORMATION

PLOT SCALE: B

ECN: 4475

TITLE: EME420MD ASSEMBLY 'E' DETAILS

DWG. NO. 60-022285-00B

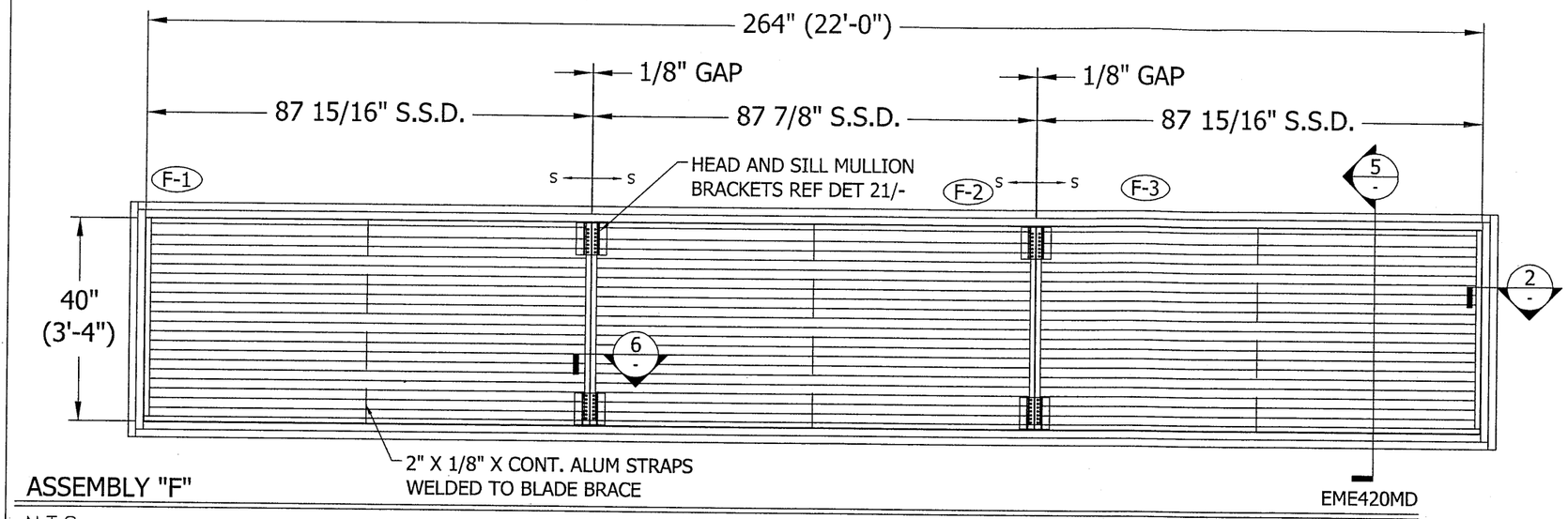

ASSEMBLY "F"

N.T.S.

FRONT VIEW

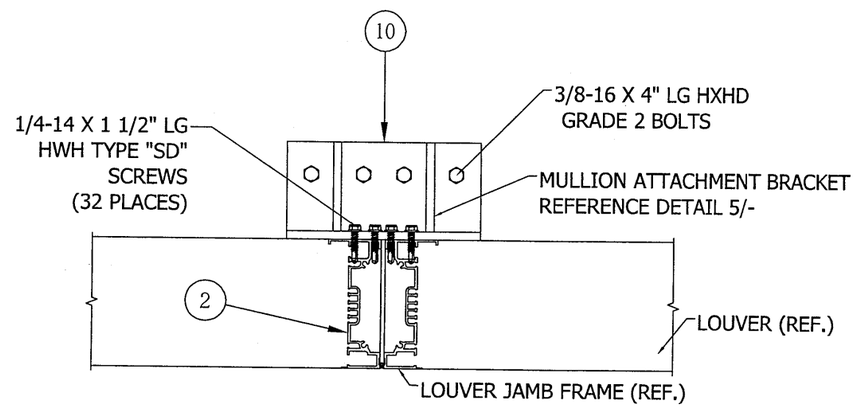

21 / - HEAD & SILL MULLION ATTACHMENT - ASSEMBLY 'F'

N.T.S.

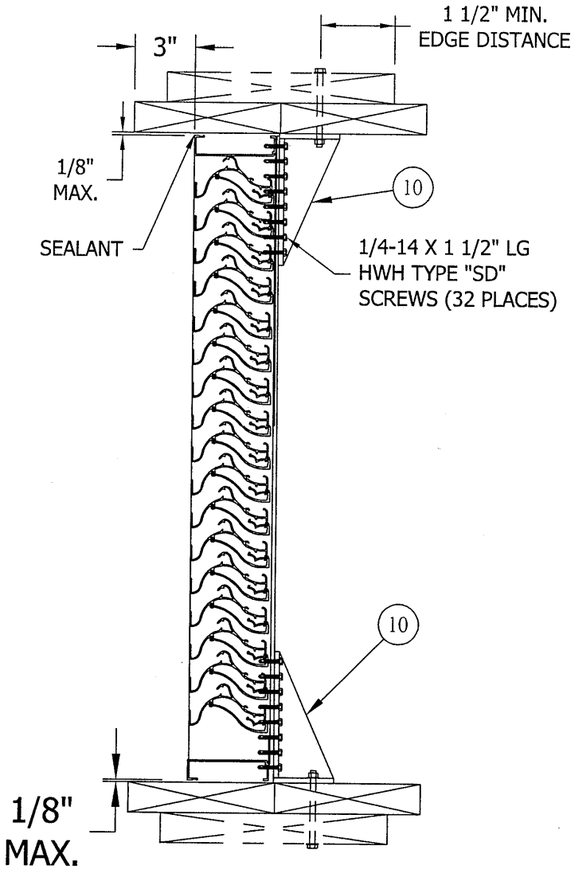

5 / - HEAD & SILL MULLION ATTACHMENT

N.T.S.
ASSEMBLY 'F'

SECTION VIEW

ENGINEER OF RECORD	DAN RAU
ENGINEERING DISCIPLINE	CIVIL ENGINEERING
REGISTRATION NUMBER	FL# 63636

DANIEL J. RAU
LICENSE
NO. 63636
STATE OF FLORIDA
PROFESSIONAL ENGINEER

DEC 12, 12

FOR OFFICE USE ONLY

FOR OFFICE USE ONLY

Approved as complying with the Florida Building Code
Date 02/14/2013
NOA# 12-0907.03
Miami Dade Product Control
By

TOLERANCES
DECIMAL DIMENSIONS:
3 PLACE .XXX +.010
2 PLACE .XX +.020
FRACTION DIMENSIONS: + 1/16
ANGLE DIMENSIONS + 2°
USE WKD-007 & 008
UNLESS SPECIFIED OTHERWISE

DWN. BY: DRP	CHK. BY:	APPV'D. BY:	APPV'D. BY:
DATE: 5/16/12	DATE:	DATE:	DATE:

SHEET 15 OF 21

CHANGE LETTER	REVISION DESCRIPTION	DWN. BY:	CHK'D. BY:	APPV'D. BY:	APPV'D. BY:	DATE
A	REVISED DRAWINGS PER DADE CO. MARKUPS	DRP	RKP	DJR		11/29/12

RUSKIN
Air & Sound Control
3900 DR. GREAVES RD
GRANDVIEW, MO 64030
PROPRIETARY INFORMATION

PLOT SCALE: B

ECN: 4475

TITLE: EME420MD
ASSEMBLY 'F' & DETAILS

DWG. NO. 60-022285-00B

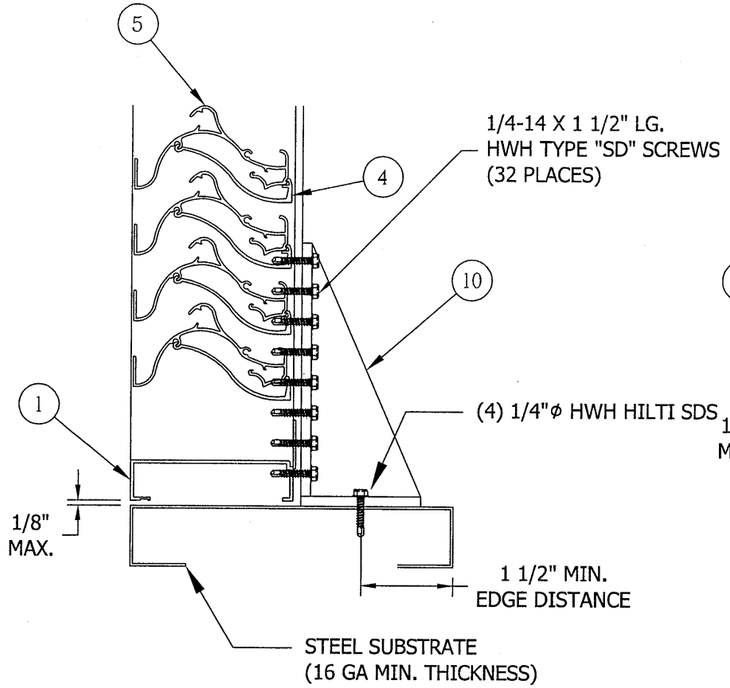

5A / - ASSEMBLY "F" ALTERNATE CONNECTION

N.T.S.
STEEL SUBSTRATE
16 GA MIN. THICKNESS

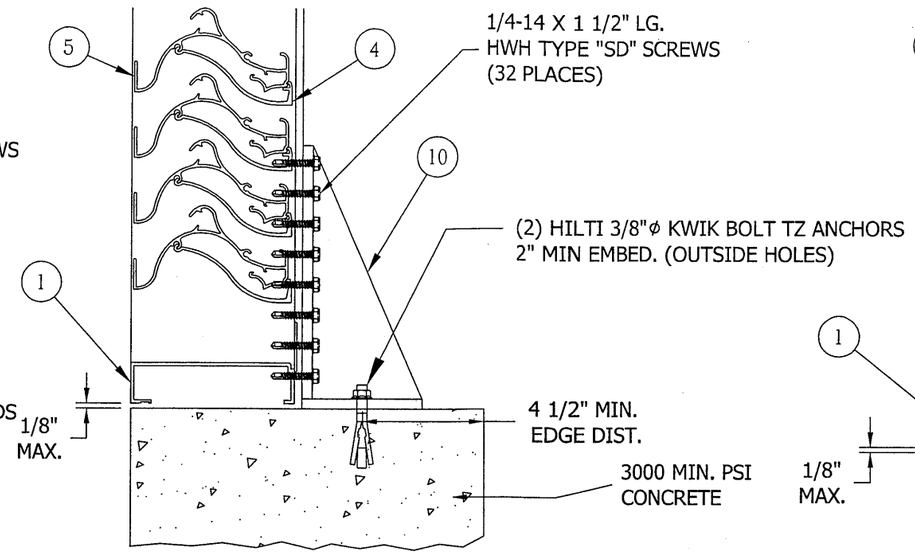

5B / - ASSEMBLY "F" ALTERNATE CONNECTION

N.T.S.
MIN. 3000 PSI CONCRETE

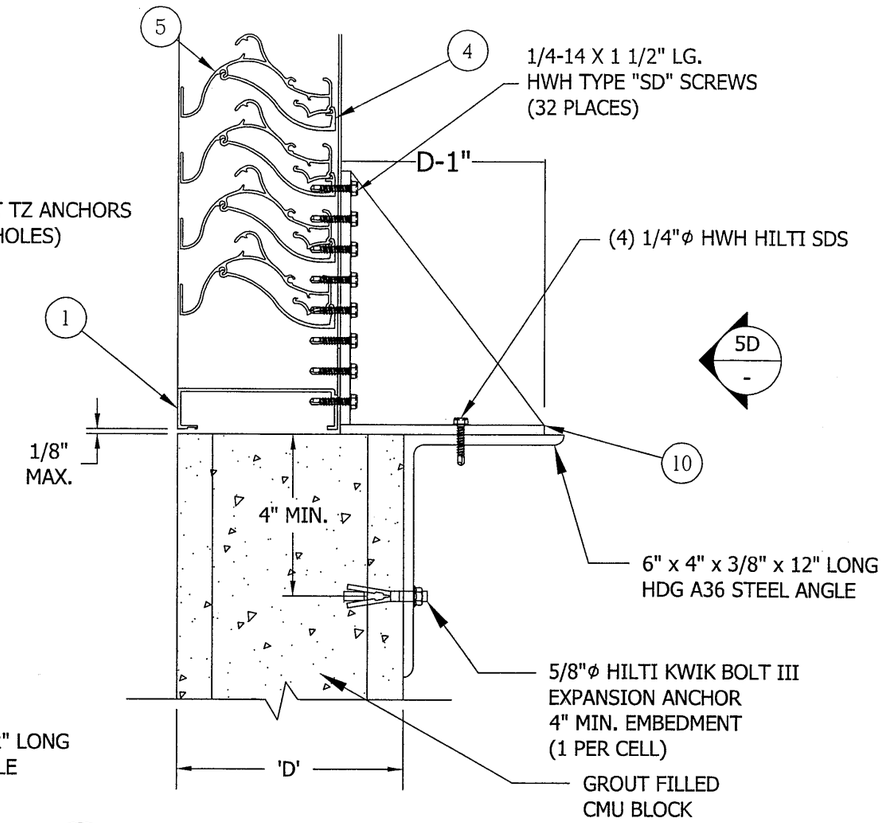

5C / - ASSEMBLY "F" ALTERNATE CONNECTION

N.T.S.
GROUT FILLED CMU (REF. NOTE 9)

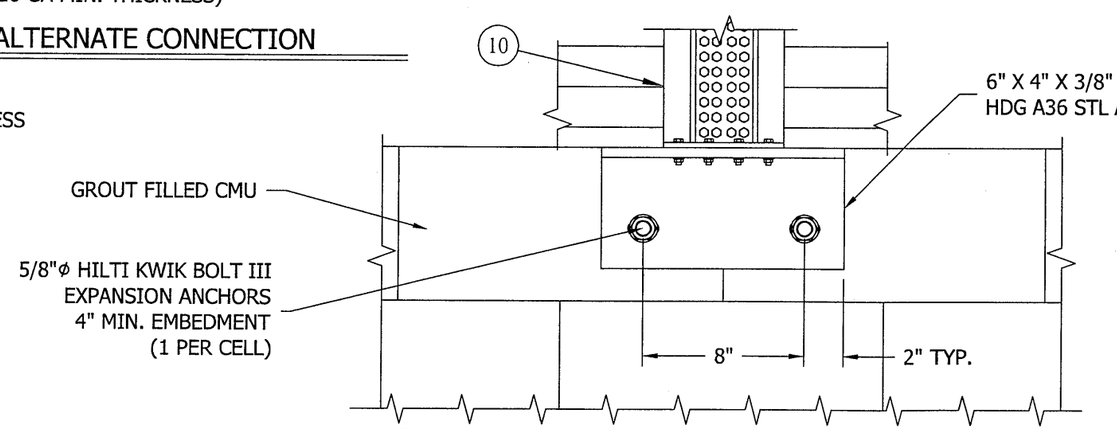

5D / - ASSEMBLY "F" ALTERNATE CONNECTION

N.T.S.
GROUT FILLED CMU (REF. NOTE 9)

ENGINEER OF RECORD	DAN RAU
ENGINEERING DISCIPLINE	CIVIL ENGINEERING
REGISTRATION NUMBER	FL# 63636

DANIEL J. RAU
LICENSE
NO. 63636
STATE OF FLORIDA
PROFESSIONAL ENGINEER
Dec 12, 12

FOR OFFICE USE ONLY

FOR OFFICE USE ONLY

Approved as complying with the Florida Building Code
Date 02/14/2013
NOA# 12-0907.03
Miami Dade Product Control
By

TOLERANCES
DECIMAL DIMENSIONS:
3 PLACE .XXX +.010
2 PLACE .XX +.020
FRACTION DIMENSIONS: + 1/16
ANGLE DIMENSIONS + 2°
USE WIQ-007 & 008
UNLESS SPECIFIED OTHERWISE

DWN. BY: KEK	CHK. BY:	APPV'D. BY:	APPV'D. BY:
DATE: 06/15/2012	DATE:	DATE:	DATE:

SHEET 16 OF 21

CHANGE LETTER	REVISION DESCRIPTION	DWN. BY:	CHK'D. BY:	APPV'D. BY:	APPV'D. BY:	DATE
A	REVISED DRAWINGS PER DADE CO. MARKUPS	DRP	RKP	DJR		11/29/12

RUSKIN
Air & Sound Control
3900 DR. GREAVES RD
GRANDVIEW, MO 64030
PROPRIETARY INFORMATION

PLOT SCALE: B

ECN: 4475

TITLE
EME420MD
ASSEMBLY 'F'
ALT CONNECTION DETAILS

DWG. NO.
60-022285-00B

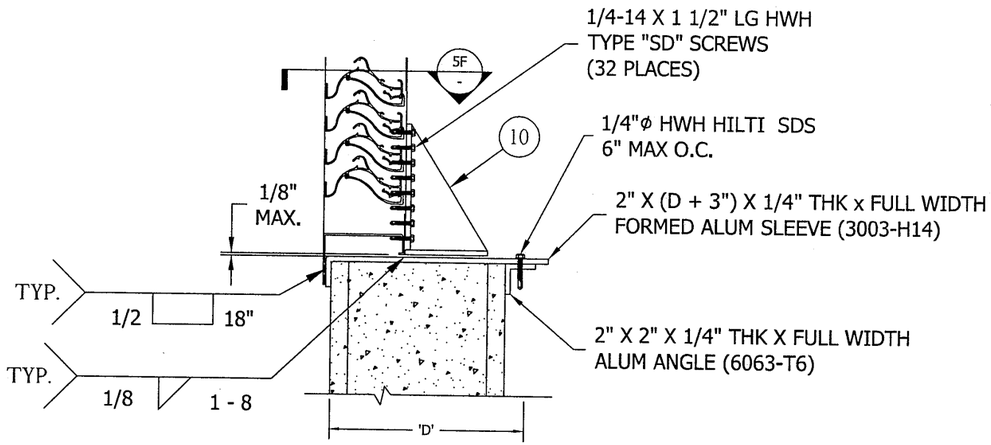

5E
-

ASSEMBLY "F" ALTERNATE CONNECTION

N.T.S.
FLANGE FRAME W/ SLEEVE CONDITION

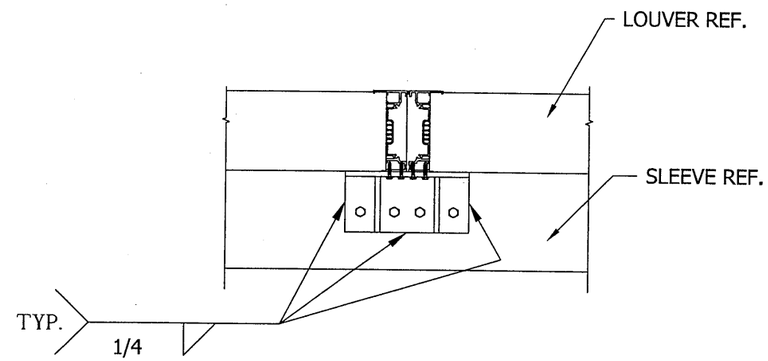

5F
-

ASSEMBLY "F" ALTERNATE CONNECTION

N.T.S.
FLANGE FRAME W/ SLEEVE CONDITION

ENGINEER OF RECORD
DAN RAU

ENGINEERING DISCIPLINE
CIVIL ENGINEERING

REGISTRATION NUMBER
FL# 63636

DANIEL J. RAU
LICENSE
NO. 63636
STATE OF
FLORIDA
PROFESSIONAL ENGINEER

Dec 12, 12

FOR OFFICE USE ONLY

FOR OFFICE USE ONLY

Approved as complying with the
Florida Building Code
Date 02/14/2013
NOA# 12-0507.03
Miami Dade Product Control
By

TOLERANCES
DECIMAL DIMENSIONS:
3 PLACE .XXX +.010_
2 PLACE .XX +.020_
FRACTION DIMENSIONS: + 1/16
ANGLE DIMENSIONS + 2°_
USE WIQ-007 & 008
UNLESS SPECIFIED OTHERWISE

DWN. BY: DRP	CHK. BY:	APPV'D. BY:	APPV'D. BY:
DATE: 5/16/12	DATE:	DATE:	DATE:

SHEET 17 OF 21

CHANGE LETTER	REVISION DESCRIPTION	DWN. BY:	CHK'D. BY:	APPV'D. BY:	APPV'D. BY:	DATE
A	REVISED DRAWINGS PER DADE CO. MARKUPS	DRP	RKP	DJR		11/29/12

RUSKIN
Air & Sound Control

3900 DR. GREAVES RD
GRANDVIEW, MO 64030
PROPRIETARY INFORMATION

PLOT SCALE
B

ECN: 4475

TITLE
EME420MD
ASSEMBLY 'F'
ALT CONNECTION DETAILS

DWG. NO.
60-022285-00B

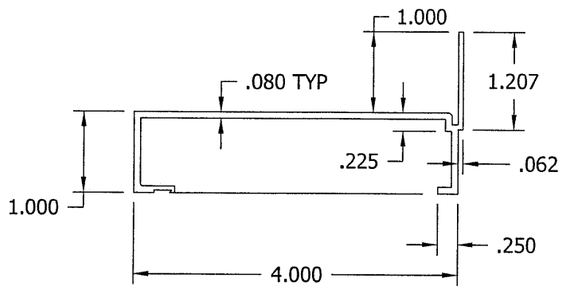

ITEM 1 - SILL/ HEAD FRAME
RUSKIN #70-020025-00B
MAT: 6063-T5 AL

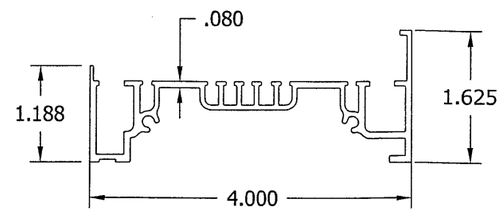

ITEM 2 - JAMB FRAME
RUSKIN #70-021959-00B
MAT: 6063-T6 AL

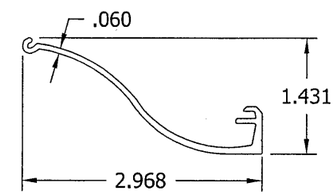

ITEM 4 - BLADE BRACE
RUSKIN #70-022490-00B
MAT: 6063-T6 AL

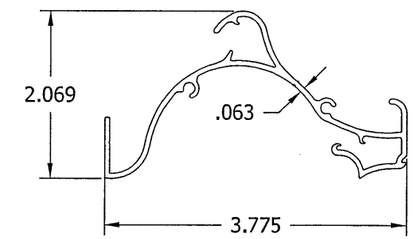

ITEM 5 - BLADE
RUSKIN #70-022546-00B
MAT: 6063-T6 AL

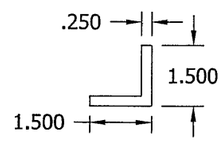

ITEM 6 -CLIP ANGLE
RUSKIN #70-021175-00B
MAT: 6063-T6 AL
LENGTH: AS REQ'D

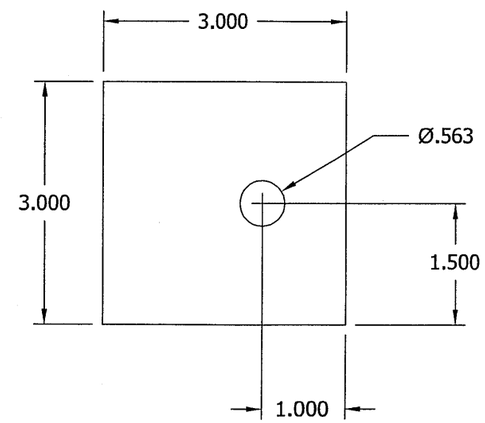

ITEM 7 - SUPPORT END PLATE
MAT: 1/4" THK A36 STL

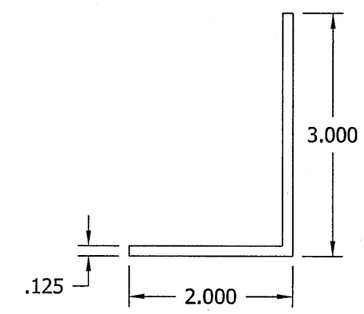

ITEM 8 - ANGLE
MAT: 6063-T6 AL

ENGINEER OF RECORD
DAN RAU
ENGINEERING DISCIPLINE
CIVIL ENGINEERING
REGISTRATION NUMBER
FL# 63636

DANIEL J. RAU
LICENSE
NO. 63636
STATE OF FLORIDA
PROFESSIONAL ENGINEER
DEC 12, 12

FOR OFFICE USE ONLY

FOR OFFICE USE ONLY

Approved as complying with the Florida Building Code
Date 02/14/2013
NOA# 12-0907.03
Miami Dade Product Control
By

TOLERANCES
DECIMAL DIMENSIONS:
3 PLACE .XXX ± .010
2 PLACE .XX ± .020
FRACTION DIMENSIONS ± 1/16
ANGLE DIMENSIONS ± 2°
USE WIQ-007 & 008
UNLESS SPECIFIED OTHERWISE

DWN. BY: DRP	CHK. BY:	APPV'D. BY:	APPV'D. BY:
DATE: 5/16/12	DATE:	DATE:	DATE:

SHEET 18 OF 21

CHANGE LETTER	REVISION DESCRIPTION	DWN. BY:	CHK'D. BY:	APPV'D. BY:	APPV'D. BY:	DATE
A	REVISED DRAWINGS PER DADE CO. MARKUPS	DRP	RKP	DJR		11/29/12

RUSKIN
Air & Sound Control
3900 DR. GREAVES RD
GRANDVIEW, MO 64030
PROPRIETARY INFORMATION

PLOT SCALE: B
ECN: 4475

TITLE
EME420MD
PARTS DETAILS

DWG. NO.
60-022285-00B

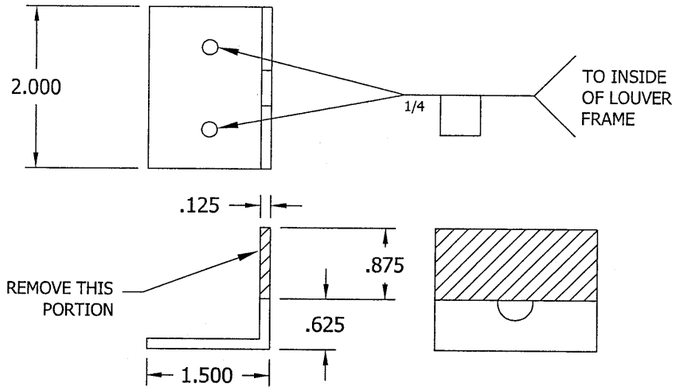

ITEM 9 - MODIFIED CLIP ANGLE
MAT: 3003-H14 AL

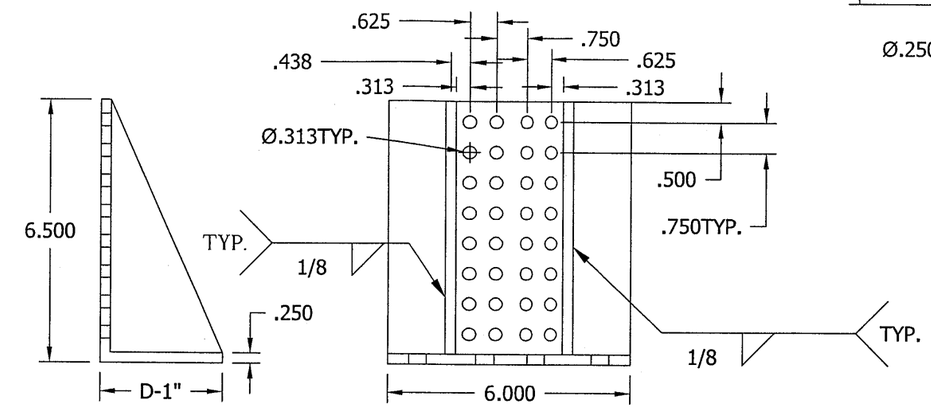

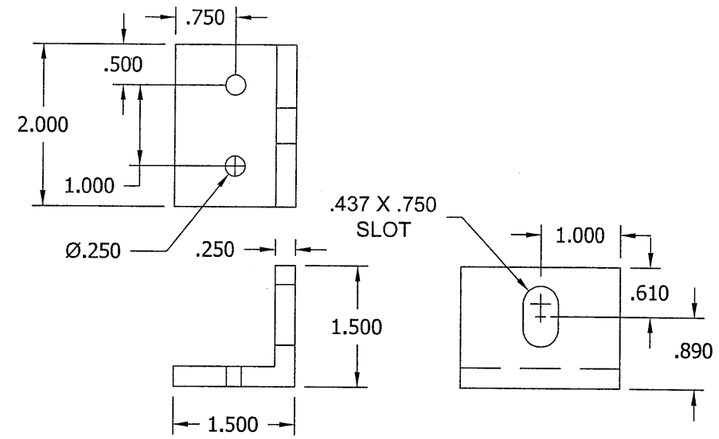

ITEM 11 - ANGLE
RUSKIN # 85-021637-00B
MAT: 6063-T6 AL

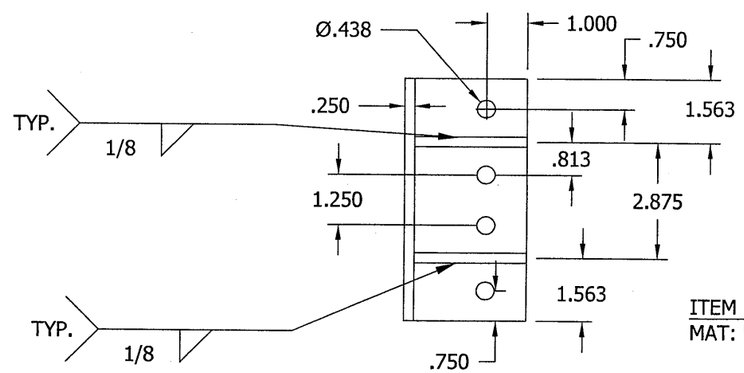

ITEM 10 - ATTACHMENT CLIP ASSY
MAT: 5052-H32 AL

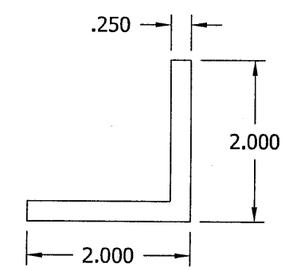

ITEM 12 - ANGLE
RUSKIN #: 85-021662-00B
MAT: 6063-T6 AL

ENGINEER OF RECORD	DAN RAU
ENGINEERING DISCIPLINE	CIVIL ENGINEERING
REGISTRATION NUMBER	FL# 63636

DANIEL J. RAU
LICENSE
NO. 63636
STATE OF
FLORIDA
PROFESSIONAL ENGINEER
DEC 12, 12

FOR OFFICE USE ONLY

FOR OFFICE USE ONLY

Approved as complying with the
Florida Building Code
Date 02/14/2013
NOA# 12-0907.03
Miami Dade Product Control
By

TOLERANCES
DECIMAL DIMENSIONS:
3 PLACE .XXX +.010_
2 PLACE .XX +.020_
FRACTION DIMENSIONS: + 1/16
ANGLE DIMENSIONS + 2°_
USE W/O-007 & 008
UNLESS SPECIFIED OTHERWISE

DWN. BY: DRP	CHK. BY:	APPV'D. BY:	APPV'D. BY:
DATE: 5/16/12	DATE:	DATE:	DATE:

SHEET 19 OF 21

CHANGE LETTER	REVISION DESCRIPTION	DWN. BY:	CHK'D. BY:	APPV'D. BY:	APPV'D. BY:	DATE
A	REVISED DRAWINGS PER DADE CO. MARKUPS	DRP	RKP	DJR		11/29/12

RUSKIN
Air & Sound Control
3900 DR. GREAVES RD
GRANDVIEW, MO 64030
PROPRIETARY INFORMATION

PLOT SCALE: B
ECN: 4475

TITLE
EME420MD
PARTS DETAILS

DWG. NO.
60-022285-00B

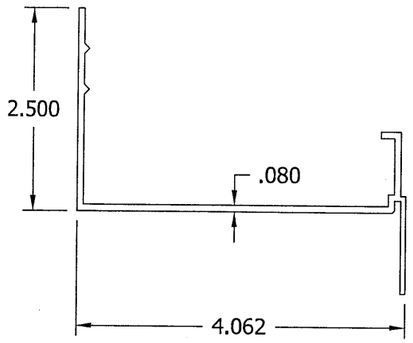

ITEM 13 - FLANGE FRAME HEAD/SILL
RUSKIN #: 70-022725-00B
MAT: 6063-T6 AL

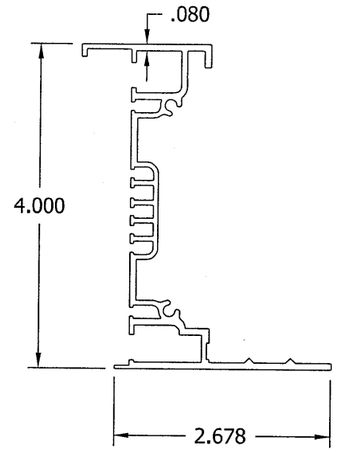

ITEM 14 - FLANGE JAMB
RUSKIN #: 70-022726-00B
MAT: 6063-T6 AL

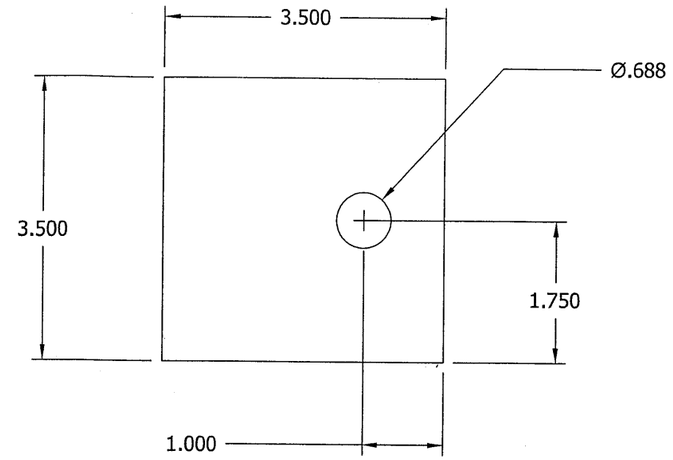

ITEM 16 -SUPPORT END PLATE
MAT: 1/4" THK A36 STEEL

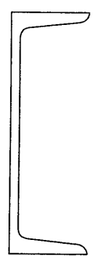

ITEM 17 -C6 X 8.2
MAT: A36 STL HDG

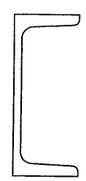

ITEM 18 -C5 X 6.7
MAT: A36 STL HDG

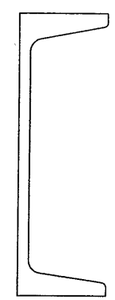

ITEM 19 - C7 X 9.8
MAT: A36 STL HDG

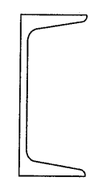

ITEM 20 -C4 X 5.4
MAT: A36 STL HDG

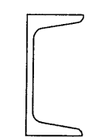

ITEM 21 - C3 X 4.1
MAT: A36 STL HDG

ENGINEER OF RECORD
DAN RAU
ENGINEERING DISCIPLINE
CIVIL ENGINEERING
REGISTRATION NUMBER
FL# 63636

DANIEL J. RAU
LICENSE
NO. 63636
STATE OF FLORIDA
PROFESSIONAL ENGINEER
DEC 12, 12

FOR OFFICE USE ONLY

FOR OFFICE USE ONLY

Approved as complying with the Florida Building Code
Date 02/14/2013
NOA# 12-0407.03
Miami Dade Product Control
By

TOLERANCES
DECIMAL DIMENSIONS:
3 PLACE .XXX +.010
2 PLACE .XX +.020
FRACTION DIMENSIONS: + 1/16
ANGLE DIMENSIONS + 2°
USE WIQ-007 & 008
UNLESS SPECIFIED OTHERWISE

DWN. BY: DRP	CHK. BY:	APPV'D. BY:	APPV'D. BY:
DATE: 5/16/12	DATE:	DATE:	DATE:

SHEET 20 OF 21

CHANGE LETTER	REVISION DESCRIPTION	DWN. BY:	CHK'D. BY:	APPV'D. BY:	APPV'D. BY:	DATE
A	REVISED DRAWINGS PER DADE CO. MARKUPS	DRP	RKP	DJR		11/29/12

RUSKIN
Air & Sound Control
3900 DR. GREAVES RD
GRANDVIEW, MO 64030
PROPRIETARY INFORMATION

PLOT SCALE: B
ECN: 4475

TITLE
EME420MD
PARTS DETAILS

DWG. NO.
60-022285-00B

ASSEMBLY B, C, & F SUPPORT TABLE

MULLION HEIGHT	MULLION SUPPORT	MULLION TO WOOD ATTACHMENT	MULLION TO STEEL ATTACHMENT	MULLION TO CONCRETE ATTACHMENT	MULLION TO CMU ATTACHMENT
FROM 127" TO 144"	(2) C6 X 8.2	DETAIL 4, 12	DETAIL 4A, 12A	DETAIL 4A, 12B	DETAIL 4A, 12C, 12D
FROM 109" TO 127"	(2) C5 X 6.7	DETAIL 4, 12	DETAIL 4A, 12A	DETAIL 4A, 12B	DETAIL 4A, 12C, 12D
FROM 93" TO 109"	(2) C4 X 5.4	DETAIL 4, 12	DETAIL 4A, 12A	DETAIL 4A, 12B	DETAIL 4A, 12C, 12D
FROM 40" TO 93"	(2) C3 X 4.1	DETAIL 4, 12	DETAIL 4A, 12A	DETAIL 4A, 12B	DETAIL 4A, 12C, 12D
FROM 12" TO 40"	NONE	DETAIL 5, 21	DETAIL 5A, 21	DETAIL 5B, 21	DETAIL 5C, 5D, 21

ASSEMBLY D SUPPORT TABLE

MULLION HEIGHT	MULLION SUPPORTS	MULLION TO WOOD ATTACHMENT	MULLION TO STEEL ATTACHMENT	MULLION TO CONCRETE ATTACHMENT	MULLION TO CMU ATTACHMENT
FROM 141" TO 144"	(2) C7 X 9.8	DETAIL 4, 12	DETAIL 4A, 12A	DETAIL 4A, 12B	DETAIL 4A, 12C, 12D
FROM 117" TO 141"	(2) C6 X 8.2	DETAIL 4, 12	DETAIL 4A, 12A	DETAIL 4A, 12B	DETAIL 4A, 12C, 12D
FROM 101" TO 117"	(2) C5 X 6.7	DETAIL 4, 12	DETAIL 4A, 12A	DETAIL 4A, 12B	DETAIL 4A, 12C, 12D
FROM 86" TO 101"	(2) C4 X 5.4	DETAIL 4, 12	DETAIL 4A, 12A	DETAIL 4A, 12B	DETAIL 4A, 12C, 12D
FROM 12" TO 86"	(2) C3 X 4.1	DETAIL 4, 12	DETAIL 4A, 12A	DETAIL 4A, 12B	DETAIL 4A, 12C, 12D

ENGINEER OF RECORD
DAN RAU
ENGINEERING DISCIPLINE
CIVIL ENGINEERING
REGISTRATION NUMBER
FL# 63636

DANIEL J. RAU
LICENSE
NO. 63636
STATE OF
FLORIDA
PROFESSIONAL ENGINEER
DEC 12 12

FOR OFFICE USE ONLY

FOR OFFICE USE ONLY

Approved as complying with the
Florida Building Code
Date 02/14/2013
NOA# 12-0907.03
Miami Dade Product Control
By

TOLERANCES
DECIMAL DIMENSIONS:
3 PLACE .XXX ± .010
2 PLACE .XX ± .020
FRACTION DIMENSIONS: ± 1/16
ANGLE DIMENSIONS ± 2°
USE WIQ-007 & 008
UNLESS SPECIFIED OTHERWISE

DWN. BY: DRP	CHK. BY:	APPV'D. BY:	APPV'D. BY:
DATE: 5/16/12	DATE:	DATE:	DATE:

SHEET 21 OF 21

CHANGE LETTER	REVISION DESCRIPTION	DWN. BY:	CHK'D. BY:	APPV'D. BY:	APPV'D. BY:	DATE
A	REVISED DRAWINGS PER DADE CO. MARKUPS	DRP	RKP	DJR		11/29/12

RUSKIN
Air & Sound Control
3900 DR. GREAVES RD
GRANDVIEW, MO 64030
PROPRIETARY INFORMATION

PLOT SCALE: NONE
ECN: 4475

TITLE
EME420MD
ASSEMBLY 'B, C, D, & F'
SUPPORT TABLES

DWG. NO.
60-022285-00B