MIAMI-DADE COUNTY
DEPARTMENT OF REGULATORY AND ECONOMIC RESOURCES (RER)
BOARD AND CODE ADMINISTRATION DIVISION

MIAMI–DADE COUNTY, FLORIDA
PRODUCT CONTROL SECTION
11805 SW 26 Street, Room 208
T (786) 315–2590 F (786) 315–2599
www.miamidade.gov/economy

# NOTICE OF ACCEPTANCE (NOA)

**R. C. Aluminum Industries, Inc.**
**2805 N.W. 75 Avenue**
**Miami, FL 33122**

**SCOPE:**

This NOA is being issued under the applicable rules and regulations governing the use of construction materials. The documentation submitted has been reviewed and accepted by Miami–Dade County RER–Product Control Section to be used in Miami–Dade County and other areas where allowed by the Authority Having Jurisdiction (AHJ).

This NOA shall not be valid after the expiration date stated below. The Miami–Dade County Product Control Section (In Miami–Dade County) and/or the AHJ (in areas other than Miami–Dade County) reserve the right to have this product or material tested for quality assurance purposes. If this product or material fails to perform in the accepted manner, the manufacturer will incur the expense of such testing and the AHJ may immediately revoke, modify, or suspend the use of such product or material within their jurisdiction. RER reserves the right to revoke this acceptance, if it is determined by Miami–Dade County Product Control Section that this product or material fails to meet the requirements of the applicable building code.

This product is approved as described herein, and has been designed to comply with the Florida Building Code, including the High Velocity Hurricane Zone.

**DESCRIPTION: Series "DM12" Aluminum Sliding Glass Door – L.M.I.**

**APPROVAL DOCUMENT:** Drawing No. **W08–29**, titled "Series–DM12 Alum. Sld. Glass Door (L.M.I.)", sheets 01 through 14 of 14, dated 03/20/08 with revision "**B**" dated 01/15/13, prepared by Al–Farooq Corporation, dated 01/23/13, signed and sealed by Javad Ahmad, P. E., bearing the Miami–Dade County Product Control Section Renewal stamp with the Notice of Acceptance number and Expiration date by the Miami–Dade County Product Control Section.

**MISSILE IMPACT RATING: Large and Small Missile Impact Resistant**

**LABELING:** Each unit shall bear a permanent label with the manufacturer's name or logo, city, state, model/series, and following statement: "Miami–Dade County Product Control Approved", unless otherwise noted herein.

**REVISION** of this NOA shall be considered after a renewal application has been filed and there has been no change in the applicable building code negatively affecting the performance of this product.

**TERMINATION** of this NOA will occur after the expiration date or if there has been a revision or change in the materials, use, and/or manufacture of the product or process. Misuse of this NOA as an endorsement of any product, for sales, advertising or any other purposes shall automatically terminate this NOA. Failure to comply with any section of this NOA shall be cause for termination and removal of NOA.

**ADVERTISEMENT:** The NOA number preceded by the words Miami–Dade County, Florida, and followed by the expiration date may be displayed in advertising literature. If any portion of the NOA is displayed, then it shall be done in its entirety.

**INSPECTION:** A copy of this entire NOA shall be provided to the user by the manufacturer or its distributors and shall be available for inspection at the job site at the request of the Building Official.

This NOA **revises and renews NOA No. 08–0620.08** and consists of this page 1 and evidence pages E–1 and E–2, as well as approval document mentioned above.

The submitted documentation was reviewed by **Jaime D. Gascon, P. E.**

MIAMI-DADE COUNTY APPROVED

**R. C. Aluminum Industries, Inc.**

## NOTICE OF ACCEPTANCE: EVIDENCE SUBMITTED

### A. DRAWINGS

1. Manufacturer's die drawings and sections.
2. Drawing No. **W08–29**, titled "Series–DM12 Alum. Sld. Glass Door (L.M.I.)", sheets 01 through 14 of 14, dated 03/20/08 with revision "**B**" dated 01/15/13, prepared by Al–Farooq Corporation, dated 01/23/13, signed and sealed by Javad Ahmad, P. E.

### B. TESTS

1. Test reports on:
   1) Air Infiltration Test, per FBC, TAS 202–94
   2) Uniform Static Air Pressure Test, Loading per FBC, TAS 202–94
   3) Water Resistance Test, per FBC, TAS 202–94
   4) Small Missile Impact Test per FBC, TAS 201–94
   5) Large Missile Impact Test per FBC, TAS 201–94
   6) Cyclic Wind Pressure Loading per FBC, TAS 203–94
   7) Forced Entry Test, Type "C" sliding door, Grade 10, per ASTM F 842–04 and per FBC 2411 3.2.1, TAS 202–94
   8) Standard Test Method for Determination of Operating Force of Sliding Windows and Doors per ASTM E 2068–00 (2008)
   9) Standard Test Methods A & B for Deglazing Force of Fenestration Products per ASTM E 987–88 (2009)

   along with marked–up drawings and installation diagram of an aluminum sliding glass door, prepared by Fenestration Testing Laboratory, Inc., Test Report No. **FTL–6775**, dated 03/13/12, signed and sealed by Marlin D. Brinson, P. E.
2. Test reports on:
   1) Air Infiltration Test, per FBC, TAS 202–94
   2) Uniform Static Air Pressure Test, Loading per FBC, TAS 202–94
   3) Water Resistance Test, per FBC, TAS 202–94
   4) Small Missile Impact Test per FBC, TAS 201–94
   5) Large Missile Impact Test per FBC, TAS 201–94
   6) Cyclic Wind Pressure Loading per FBC, TAS 203–94
   7) Forced Entry Test, per FBC 2411.3.2.1, and TAS 202–94

   along with marked–up drawings and installation diagram of an aluminum sliding glass door, prepared by Fenestration Testing Laboratory, Inc., Test Report No. **FTL–5462**, dated 01/24/08, signed and sealed by Carlos S. Rionda, P.E. ***(Submitted under previous NOA No. 08–0620.08)***

### C. CALCULATIONS

1. Anchor verification calculations and structural analysis, complying with **FBC–2010**, prepared by Al–Farooq Corporation, dated 07/12/12, signed and sealed by Javad Ahmad, P. E.
2. **Glazing complies with ASTM E1300–04**

**Jaime D. Gascon, P. E.**
**Product Control Section Supervisor**
**NOA No. 12–0917.02**
**Expiration Date: September 11, 2018**
**Approval Date: March 07, 2013**

## NOTICE OF ACCEPTANCE: EVIDENCE SUBMITTED

### D. QUALITY ASSURANCE

1. Miami–Dade Department of Regulatory and Economic Resources (RER).

### E. MATERIAL CERTIFICATIONS

1. Notice of Acceptance No. **11–0624.01** issued to **E.I. DuPont DeNemours & Co., Inc.** for their **"DuPont Butacite® PVB Interlayer"** dated 09/08/11, expiring on 12/11/16.
2. Notice of Acceptance No. **11–0624.02** issued to **E.I. DuPont DeNemours & Co.**, Inc. for their "**DuPont SentryGlas® Interlayer**" dated 08/25/11, expiring on 01/14/17.

### F. STATEMENTS

1. Statement letter of no financial interest, conformance and complying with **FBC–2010**, issued by Al–Farooq Corporation, dated 07/11/12, signed and sealed by Javad Ahmad, P. E.
2. Laboratory compliance letter for Test Report No. **FTL–6775**, issued by Fenestration Testing Laboratory, Inc., dated 03/13/12, signed and sealed by Marlin D. Brinson, P. E.
3. Proposal issued by Product Control, dated 09/30/11, signed by Jaime D. Gascon, P. E.
4. Laboratory compliance letter for Test Report No. **FTL–5462**, issued by Fenestration Testing Laboratory, Inc., dated 01/24/08, signed and sealed by Carlos S. Rionda, P. E.
   ***(Submitted under previous NOA No. 08–0620.08)***
5. Proposal issued by Product Control, dated 07/05/06, signed by Jaime D. Gascon, P. E.
6. ***(Submitted under previous NOA No. 08–0620.08)***
7. Proposal No. **05–0281** issued by Product Control, dated 09/22/05, signed by Manuel Perez, P. E.
   ***(Submitted under previous NOA No. 08–0620.08)***
8. Proposal No. **05–0265** issued by Product Control, dated 09/22/05, signed by Ishaq Chanda, P. E.
   ***(Submitted under previous NOA No. 08–0620.08)***

### G. OTHERS

1. Notice of Acceptance No. **08–0620.08**, issued to R. C. Aluminum Industries, Inc. for their Series "**2450ST Aluminum Sliding Glass Door – L. M. I.**", approved on 09/11/08 and expiring on 09/11/13.

**Jaime D. Gascon, P. E.**
**Product Control Section Supervisor**
**NOA No. 12–0917.02**
**Expiration Date: September 11, 2018**
**Approval Date: March 07, 2013**

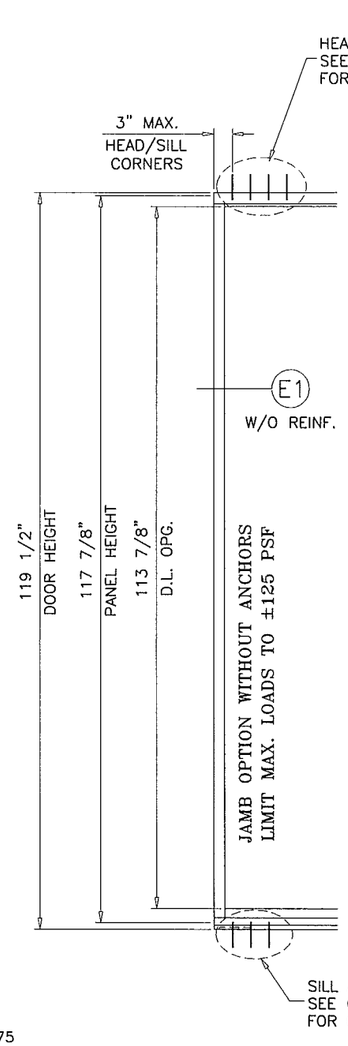


FREE STANDING JAMB
SEE SHEET 9 FOR DETAILS

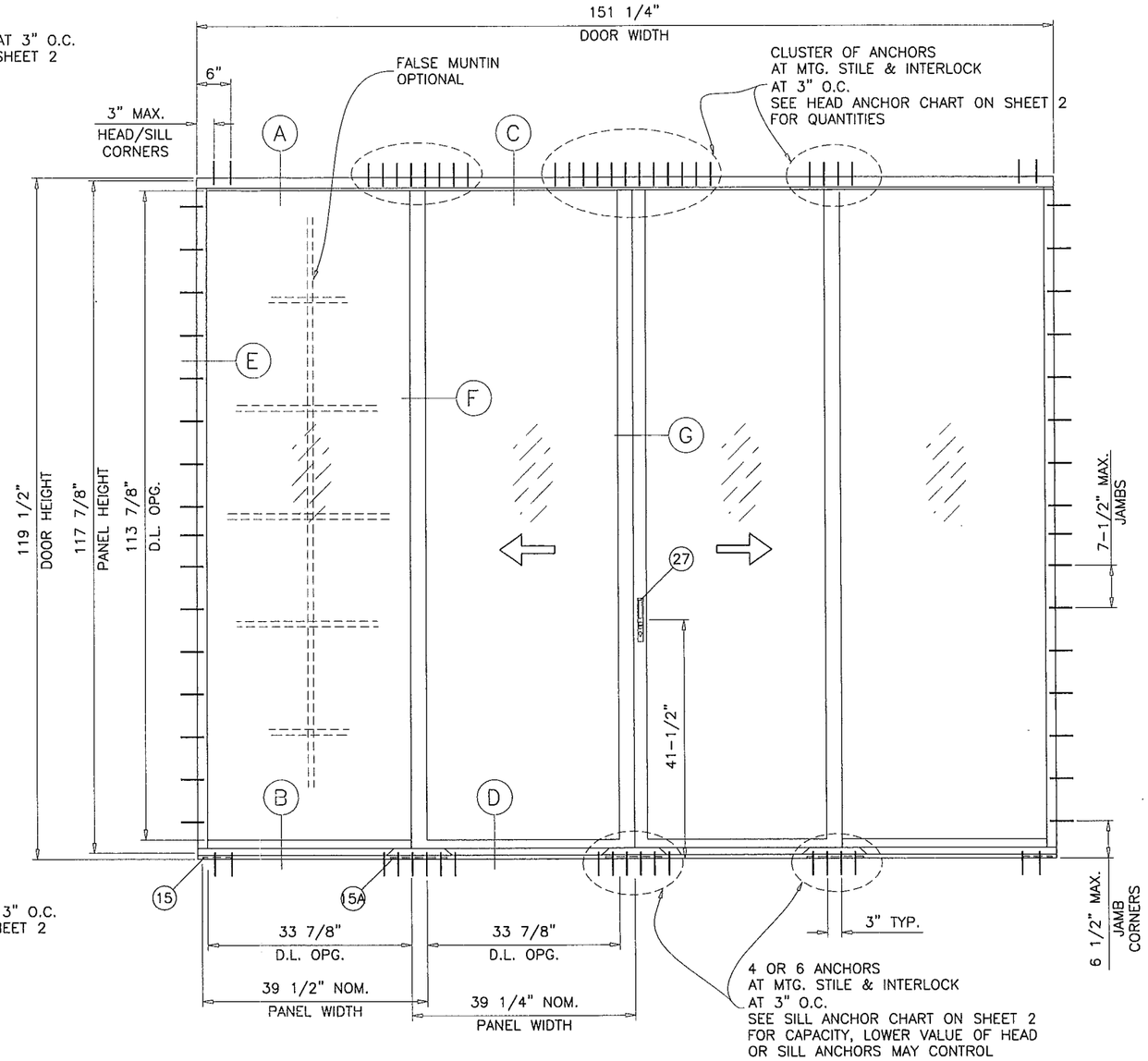


TYPICAL ELEVATION
TESTED UNIT

DAYLITE OPENINGS:

DLO WIDTH (FIX. PANEL) = PANEL WIDTH – 5.625
DLO WIDTH (OPER. PANEL) = PANEL WIDTH – 5.375
DLO HEIGHT = FRAME HEIGHT – 5.625

THESE DOORS ARE RATED FOR LARGE MISSILE IMPACT.
SHUTTERS ARE NOT REQUIRED.

## SERIES–DM12 ALUMINUM SLIDING GLASS DOOR

DESIGN LOAD RATING FOR DOORS TO BE AS PER CHARTS SHOWN ON SHEET 2.

DOORS MUST COMPLY WITH EGRESS REQUIREMENTS AS APPLICABLE PER FBC.

THIS PRODUCT HAS BEEN DESIGNED AND TESTED TO COMPLY WITH THE REQUIREMENTS OF THE FLORIDA BUILDING CODE INCLUDING HIGH VELOCITY HURRICANE ZONE (HVHZ).

WOOD BUCKS BY OTHERS, MUST BE ANCHORED PROPERLY TO TRANSFER LOADS TO THE STRUCTURE.

ANCHORS SHALL BE AS LISTED, SPACED AS SHOWN ON DETAILS, ANCHORS EMBEDMENT TO BASE MATERIAL SHALL BE BEYOND WALL DRESSING OR STUCCO.

ANCHORING OR LOADING CONDITIONS NOT SHOWN IN THESE DETAILS ARE NOT PART OF THIS APPROVAL.

A LOAD DURATION INCREASE IS USED IN DESIGN OF ANCHORS INTO WOOD ONLY.

MATERIALS INCLUDING BUT NOT LIMITED TO STEEL/METAL SCREWS, THAT COME INTO CONTACT WITH OTHER DISSIMILAR MATERIALS SHALL MEET THE REQUIREMENTS OF THE FLORIDA BLDG. CODE SECTION 2003.8.4.

PRODUCT RENEWED
as complying with the Florida
Building Code
Acceptance No 12-0917.02
Expiration Date 09/11/2018
By
Miami Dade Product Control

Engr: JAVAD AHMAD
CIVIL
FLA. PE # 70592
C.A.N. 3538

JAN 25 2013

LAMINATED GLASS
LARGE MISSILE IMPACT


AL-FAROOQ CORPORATION
ENGINEERS & PRODUCT DEVELOPMENT
1235 S.W. 87 AVE
MIAMI, FLORIDA 33174
TEL. (305) 264-8100 FAX. (305) 262-6978
COMP-ANL\W08-29RC-REV.


SERIES–DM12 ALUM SLD. GLASS DOOR (L.M.I.)

R.C. ALUMINUM INDUSTRIES INC.
2805 N.W. 75 TH AVE.
MIAMI, FL. 33122
TEL. (305) 592-1515 FAX. (305) 592-2184

revisions:

| no | date | by | description |
|---|---|---|---|
| A | 07.19.12 | | GENERAL REVISION |
| B | 01.15.13 | | REV. PER RER COMMENTS |

date: 03-20-08
scale: 1/2"=1'-0"
dr. by: HAMID
chk. by:

drawing no.
W08–29

## DESIGN LOAD CAPACITY – PSF (HEAD ANCHORS)

| PANEL WIDTH NOMINAL INCHES | DOOR HEIGHT INCHES | ANCHORS TYPE A | | | ANCHORS TYPE B | | | | | ANCHORS TYPE C | | | | |
|---|---|---|---|---|---|---|---|---|---|---|---|---|---|---|
| | | 1/2" MAX. SHIM SPACE | | | 1/4" MAX. SHIM SPACE | | 1/2" MAX. SHIM SPACE | | | 1/4" MAX. SHIM SPACE | | 1/2" MAX. SHIM SPACE | | |
| | | 2 ANCHORS AT FREE STAND. JAMB | 3 ANCHORS AT FREE STAND. JAMB | 4 ANCHORS AT FREE STAND. JAMB | 2 ANCHORS AT FREE STAND. JAMB | 3 ANCHORS AT FREE STAND. JAMB | 2 ANCHORS AT FREE STAND. JAMB | 3 ANCHORS AT FREE STAND. JAMB | 4 ANCHORS AT FREE STAND. JAMB | 2 ANCHORS AT FREE STAND. JAMB | 3 ANCHORS AT FREE STAND. JAMB | 2 ANCHORS AT FREE STAND. JAMB | 3 ANCHORS AT FREE STAND. JAMB | 4 ANCHORS AT FREE STAND. JAMB |
| | | 4 ANCHORS AT MTG. STILE ENDS | 6 ANCHORS AT MTG. STILE ENDS | 8 ANCHORS AT MTG. STILE ENDS | 4 ANCHORS AT MTG. STILE ENDS | 6 ANCHORS AT MTG. STILE ENDS | 4 ANCHORS AT MTG. STILE ENDS | 6 ANCHORS AT MTG. STILE ENDS | 8 ANCHORS AT MTG. STILE ENDS | 4 ANCHORS AT MTG. STILE ENDS | 6 ANCHORS AT MTG. STILE ENDS | 4 ANCHORS AT MTG. STILE ENDS | 6 ANCHORS AT MTG. STILE ENDS | 8 ANCHORS AT MTG. STILE ENDS |
| | | EXT. (+) INT. (–) | EXT. (+) INT. (–) | EXT. (+) INT. (–) | EXT. (+) INT. (–) | EXT. (+) INT. (–) | EXT. (+) INT. (–) | EXT. (+) INT. (–) | EXT. (+) INT. (–) | EXT. (+) INT. (–) | EXT. (+) INT. (–) | EXT. (+) INT. (–) | EXT. (+) INT. (–) | EXT. (+) INT. (–) |
| 30 | 96 | 124.0 | 150.0 | 150.0 | 150.0 | 150.0 | 150.0 | 150.0 | 150.0 | 150.0 | 150.0 | 81.2 | 121.8 | 150.0 |
| 36 | | 103.3 | 150.0 | 150.0 | 150.0 | 150.0 | 126.4 | 150.0 | 150.0 | 150.0 | 150.0 | 67.7 | 101.5 | 135.3 |
| 37-3/4 | | 98.5 | 147.8 | 150.0 | 150.0 | 150.0 | 120.6 | 150.0 | 150.0 | 150.0 | 150.0 | 64.5 | 96.8 | 129.1 |
| 42 | | 88.6 | 132.9 | 150.0 | 150.0 | 150.0 | 108.4 | 150.0 | 150.0 | 142.9 | 150.0 | 58.0 | 87.0 | 116.0 |
| 30 | 102 | 116.7 | 150.0 | 150.0 | 150.0 | 150.0 | 142.8 | 150.0 | 150.0 | 150.0 | 150.0 | 76.4 | 114.6 | 150.0 |
| 36 | | 97.3 | 145.9 | 150.0 | 150.0 | 150.0 | 119.0 | 150.0 | 150.0 | 150.0 | 150.0 | 63.7 | 95.5 | 127.4 |
| 37-3/4 | | 92.7 | 139.1 | 150.0 | 150.0 | 150.0 | 113.5 | 150.0 | 150.0 | 149.6 | 150.0 | 60.7 | 91.1 | 121.5 |
| 42 | | 83.4 | 125.0 | 150.0 | 150.0 | 150.0 | 102.0 | 150.0 | 150.0 | 134.5 | 150.0 | 54.6 | 81.9 | 109.2 |
| 30 | 108 | 110.2 | 150.0 | 150.0 | 150.0 | 150.0 | 134.8 | 150.0 | 150.0 | 150.0 | 150.0 | 72.2 | 108.3 | 144.4 |
| 36 | | 91.9 | 137.8 | 150.0 | 150.0 | 150.0 | 112.4 | 150.0 | 150.0 | 148.1 | 150.0 | 60.1 | 90.2 | 120.3 |
| 37-3/4 | | 87.6 | 131.4 | 150.0 | 150.0 | 150.0 | 107.2 | 150.0 | 150.0 | 141.3 | 150.0 | 57.4 | 86.0 | 114.7 |
| 30 | 114 | 104.4 | 150.0 | 150.0 | 150.0 | 150.0 | 127.7 | 150.0 | 150.0 | 150.0 | 150.0 | 68.4 | 102.6 | 136.8 |
| 36 | | 87.0 | 130.5 | 150.0 | 150.0 | 150.0 | 106.5 | 150.0 | 150.0 | 140.4 | 150.0 | 57.0 | 85.5 | 114.0 |
| 37-3/4 | | 83.0 | 124.5 | 150.0 | 150.0 | 150.0 | 101.5 | 150.0 | 150.0 | 133.8 | 150.0 | 54.3 | 81.5 | 108.7 |
| 30 | 119-3/8 | 99.7 | 149.6 | 150.0 | 150.0 | 150.0 | 122.0 | 150.0 | 150.0 | 150.0 | 150.0 | 65.3 | 98.0 | 130.6 |
| 36 | | 83.1 | 124.6 | 150.0 | 150.0 | 150.0 | 101.7 | 150.0 | 150.0 | 134.0 | 150.0 | 54.4 | 81.6 | 108.8 |
| 37-3/4 | | 79.2 | 118.9 | 150.0 | 148.3 | 150.0 | 96.9 | 145.5 | 150.0 | 127.8 | 150.0 | 51.9 | 77.8 | 103.8 |

## DESIGN LOAD CAPACITY – PSF SILL ANCHORS (TYPE D ONLY)

| PANEL WIDTH NOMINAL INCHES | DOOR HEIGHT INCHES | 2 ANCHORS AT FREE STAND. JAMB | 3 ANCHORS AT FREE STAND. JAMB |
|---|---|---|---|
| | | 4 ANCHORS AT MTG. STILE ENDS | 6 ANCHORS AT MTG. STILE ENDS |
| | | EXT. (+) INT. (–) | EXT. (+) INT. (–) |
| 30 | 96 | 150.0 | 150.0 |
| 36 | | 150.0 | 150.0 |
| 37-3/4 | | 150.0 | 150.0 |
| 42 | | 150.0 | 150.0 |
| 30 | 102 | 150.0 | 150.0 |
| 36 | | 150.0 | 150.0 |
| 37-3/4 | | 150.0 | 150.0 |
| 42 | | 150.0 | 150.0 |
| 30 | 108 | 150.0 | 150.0 |
| 36 | | 150.0 | 150.0 |
| 37-3/4 | | 150.0 | 150.0 |
| 30 | 114 | 150.0 | 150.0 |
| 36 | | 150.0 | 150.0 |
| 37-3/4 | | 150.0 | 150.0 |
| 30 | 119-3/8 | 150.0 | 150.0 |
| 36 | | 150.0 | 150.0 |
| 37-3/4 | | 148.3 | 150.0 |

NOTE:

1. DOORS WITH FRAME JAMB REVERSED (XO, OXO, XOX CONFIGURATIONS) LIMIT MAX. DESIGN LOADS TO ±125 PSF.
2. DOORS WITH FREE STANDING JAMBS LIMIT MAX. LOADS TO ±125 PSF.

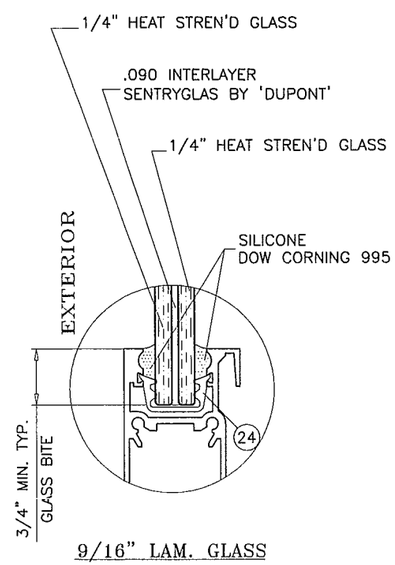


9/16" LAM. GLASS

NOTE:
GLASS CAPACITIES ON THIS SHEET ARE BASED ON ASTM E1300-04 (3 SEC. GUSTS) AND FLORIDA BUILDING COMMISSION DECLARATORY STATEMENT DCA05-DEC-219

PRODUCT RENEWED
as complying with the Florida
Building Code
Acceptance No 12-0917.02
Expiration Date 09/11/2018
By
Miami Dade Product Control

Engr: JAVAD AHMAD
CIVIL
FLA. PE # 70592
C.A.N. 3538

JAN 25 2013


AL-FAROOQ CORPORATION
ENGINEERS & PRODUCT DEVELOPMENT
1235 S.W. 87 AVE
MIAMI, FLORIDA 33174
TEL. (305) 264-8100 FAX. (305) 262-6978
COMP-ANL\W08-29RC-REV


SERIES-DM12 ALUM SLD. GLASS DOOR (L.M.I.)


R.C. ALUMINUM INDUSTRIES INC.
2805 N.W. 75 TH AVE.
MIAMI, FL. 33122
TEL. (305) 592-1515 FAX. (305) 592-2184


revisions:

| no | date | by | description |
|---|---|---|---|
| A | 07.19.12 | | GENERAL REVISION |
| B | 01.15.13 | | NO CHANGE THIS SHEET |

date: 03-20-08
scale: –
dr. by: HAMID
chk. by:

drawing no.
W08-29

| ITEM NO. | PART NUMBER | QUANTITY | DESCRIPTION | MATERIAL | MANUF./SUPPLIER/REMARKS |
|---|---|---|---|---|---|
| 1 | 2400ST-038 | 1 | FRAME HEAD | 6063-T6/6005-T5 | – |
| 1B | 2400ST-066 | 1 | ALT. FRAME HEAD | 6063-T6/6005-T5 | – |
| 1C | 2400ST-066A | 1 | ALT. FRAME HEAD | 6063-T6/6005-T5 | – |
| 2 | 2400ST-039 | 1 | FRAME SILL | 6005-T5 | – |
| 2A | 2400ST-082A | 1 | ALT. FRAME SILL | 6005-T5 | – |
| 3 | 2400ST-042 | 2 | FRAME JAMB | 6063-T6 | – |
| 4 | 2400ST-008 | 1/MOV. PANEL | MOVING HORIZ. BOTT. RAIL | 6063-T6 | – |
| 4A | 2400ST-069 | 1/MOV. PANEL | ALTERNATE MOVING HORIZ. BOTT. RAIL | 6063-T6 | – |
| 4B | 2400ST-084 | 1/MOV. PANEL | HI-RISE MOVING HORIZ. BOTT. RAIL | 6063-T6 | – |
| 5 | 2400ST-009 | 1/FIX. PANEL | FIXED HORIZ. BOTT. RAIL | 6063-T6 | – |
| 5B | 2400ST-007 | 1/FIX. PANEL | HI-RISE FIXED HORIZ. BOTT. RAIL | 6063-T6 | – |
| 6 | 2400ST-006 | 1/MOV. PANEL | TOP MOVING RAIL | 6063-T6 | – |
| 7 | 2400ST-007 | 1/FIX. PANEL | TOP FIXED RAIL | 6063-T6 | – |
| 8 | 2400ST-004 | 1/FIX. PANEL | JAMB FIXED STILE | 6063-T6 | – |
| 9 | 2400ST-002 | 1 | JAMB FIX. STILE/LOCK STILE | 6063-T6 | – |
| 10 | 2400ST-037 | 1/ PANEL | INTERIOR INTERLOCK | 6005-T5 | – |
| 10A | 2400ST-061 | 1/ PANEL | EXTERIOR INTERLOCK | 6005-T5 | – |
| 10B | 2400ST-062 | 1/ PANEL | ALTERNATE EXTERIOR INTERLOCK | 6005-T5 | – |
| 11 | 2400ST-063 | 1 | MEETING STILE | 6005-T5 | – |
| 12 | 2400ST-012 | 1 | THRESHOLD FILLING TRACK (LENGTH = OPNG. WIDTH BETWEEN FIXED PANELS) | 6063-T6 | – |
| 13 | 2400ST-011 | – | SILL TRACK ANCHOR, 12" LONG | 6005-T5 | – |
| 13A | 2400ST-067 | – | ALT. SILL TRACK ANCHOR, 12" LONG | 6005-T5 | REQD. FOR DOOR HEIGHTS > 127 IN. |
| 14 | 2400ST-019 | 1 | HEAD ADAPTER (LENGTH = OPNG. WIDTH BETWEEN FIXED PANELS) | 6063-T6 | – |
| 15 | 2400ST-031 | 2 | SILL TRACK PLATE (5-1/4" X 1/4" X 5" LONG) | 6063-T6 | AT EACH END |
| 15A | 2400ST-031 | 3 | SILL TRACK PLATE (5-1/4" X 1/4" X 10" LONG) | 6063-T6 | AT INTERLOCK/ASTRAGAL STILES |
| 17 | #10 X 1/2" | 2 | WEATHERSTRIP FASTENERS | – | – |
| 18 | V-027 | – | BULB W'STRIPPING | TPE | DUROMETER 75±5 SHORE "A" |
| 19 | V-019 | – | FLAP WEATHER SEAL | TPE | DUROMETER 75±5 SHORE "A" |
| 20 | V-026 | – | BULB W'STRIPPING | TPE | DUROMETER 75±5 SHORE "A" |
| 21 | W31265NK | – | FIN PILE W'STRIPPING | – | ULTRAFAB |
| 22 | Q250X270 | – | Q-LON W'STRIPPING | – | SCHLEGEL |
| 24 | V-017 | AS REQD. | GLAZING GASKET (9/16" GLASS) | TPE | DUROMETER 75±5 SHORE "A" |
| 26 | PR03-6000 | 2/MOV. PANEL | TANDEM WHEEL ASSEMBLY | – | INTERLOCK |
| 26A | 1981-PRS-212WSS | 2/MOV. PANEL | TA-81-PRS-212W-SS WHEELS, 2 PER MOV. PANEL AT 3" FROM ENDS | – | INTERLOCK |
| 27 | PS01-0001 | 1 | STANDARD SLIDE SET LOCK | – | INTERLOCK |
| 28 | – | 1 | LOCK KEEPER | – | – |
| 29 | P-046 | AS REQD. | COMMERCIAL SERIES S.G.D. BUMPER @ 2400ST-066, 1-1/2" LONG | PVC | – |
| 30 | 2400ST-040 | AS REQD. | INSIDE SCREEN TRACK | 6063-T6 | – |
| 31 | #10 X 1-1/2" | 2/ PANEL | PANEL ASSBY. SCREWS | ST/ST | PH SMS |
| 32 | #10 X 1" | 2/ CORNER | FRAME ASSBY. SCREWS | – | PH SMS |
| 33 | – | 2 | 4-1/4" X .060" X 6" LONG PLATE | 6063-T6 | AT FRAME JAMB BOTTOM |
| 34 | – | – | 5/8" X 1-1/2" X .1" PLATE @ LOCK STILE BOTTOM | 6063-T6 | FASTENED W/ #8 X 3/8" FH SMS |
| 35 | – | 1/ MOV. PANEL | 5/8" X 1-1/8" X 5/8" X 1/8" CHANNEL (LENGTH = PANEL WIDTH – 10") | ST/ST | Fy = 36 KSI MIN. |
| 37 | 2400ST-071 | AS REQD. | FREE STANDING JAMB (FIX. SIDE) | 6005-T5 | – |
| 38 | 2400ST-072 | AS REQD. | FREE STANDING JAMB (OPERABLE SIDE) | 6005-T5 | – |
| 39 | 2400ST-086 | AS REQD. | JAMB STIFFENER | 6005-T5 | – |

NOTE:
ITEM 15 IS USED AT EACH END OF THE DOOR (JAMB) AND ITEM 15A IS USED AT THE INTERLOCK/ASTRAGAL STILES.

PRODUCT RENEWED
as complying with the Florida Building Code
Acceptance No. 12-0917.02
Expiration Date 09/11/2018
By
Miami Dade Product Control

Engr: JAVAD AHMAD
CIVIL
FLA. PE # 70592
C.A.N. 3538

JAN 25 2013


AL-FAROOQ CORPORATION
ENGINEERS & PRODUCT DEVELOPMENT
1235 S.W. 87 AVE
MIAMI, FLORIDA 33174
TEL. (305) 264-8100 FAX. (305) 262-6978
COMP-ANL\W08-29RC-REV


SERIES-DM12 ALUM SLD. GLASS DOOR (L.M.I.)


R.C. ALUMINUM INDUSTRIES INC.
2805 N.W. 75 TH AVE.
MIAMI, FL. 33122
TEL. (305) 592-1515 FAX. (305) 592-2184


revisions:

| no | date | by | description |
|---|---|---|---|
| A | 07.19.12 | | GENERAL REVISION |
| B | 01.15.13 | | REV. PER RER COMMENTS |

date: 03-20-08
scale: –
dr. by: HAMID
chk. by:

drawing no.
W08-29

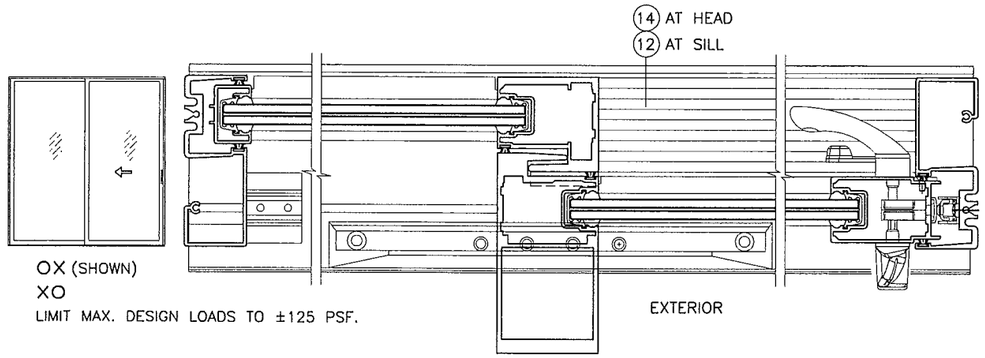


OX (SHOWN)
XO
LIMIT MAX. DESIGN LOADS TO ±125 PSF.

NOTE:
FOR CONFIGURATION ILLUSTRATION ONLY.
SEE ANCHORS INSTALLATION DETAILS ON SHEETS 5 THRU 8.
FOR FREE STANDING JAMBS DETAILS SEE SHEET 9.

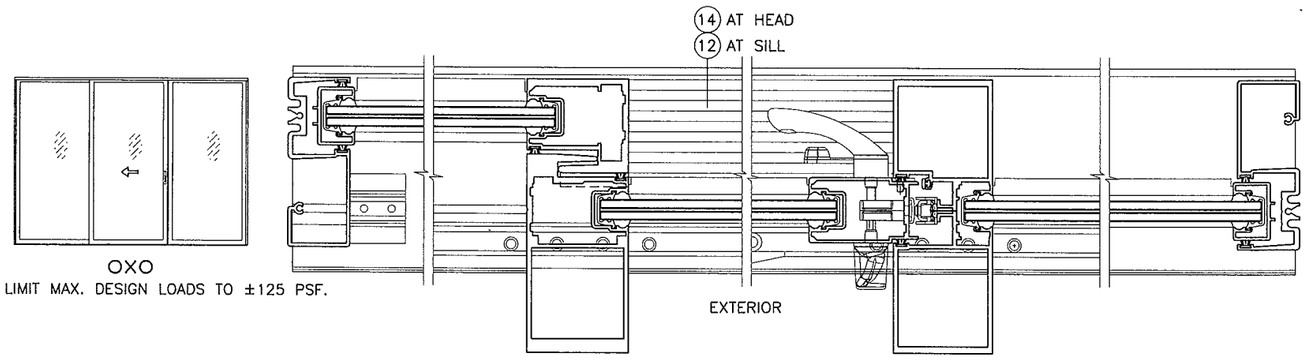


OXO
LIMIT MAX. DESIGN LOADS TO ±125 PSF.

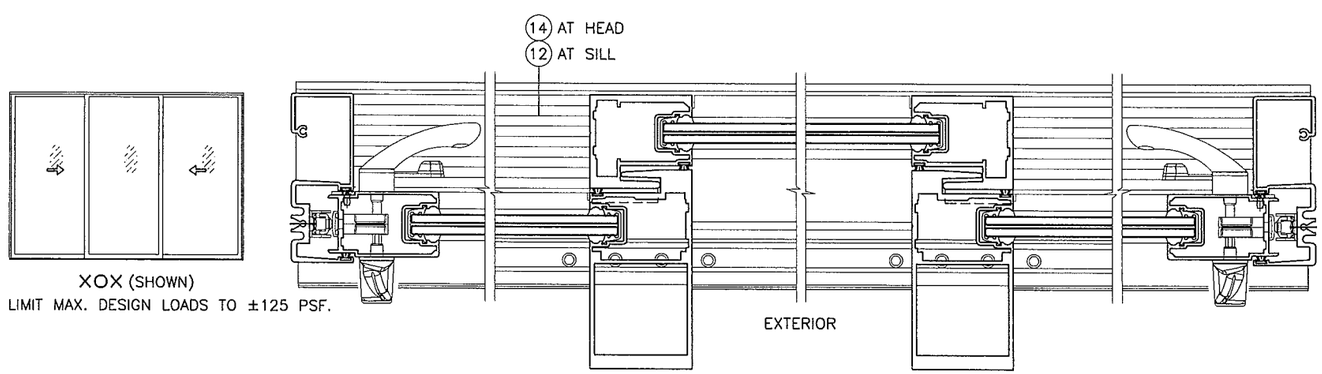


XOX (SHOWN)
LIMIT MAX. DESIGN LOADS TO ±125 PSF.

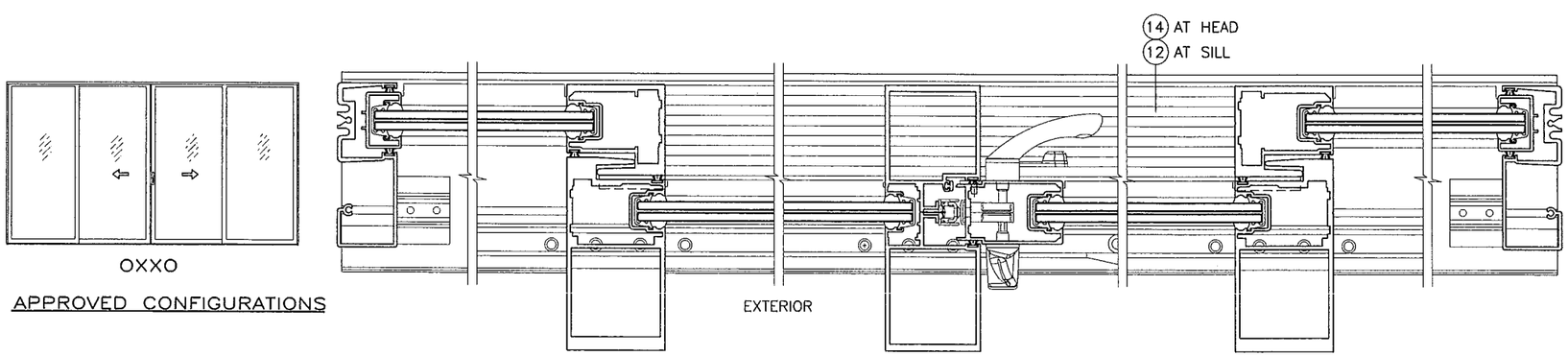


OXXO

APPROVED CONFIGURATIONS

PRODUCT RENEWED
as complying with the Florida
Building Code
Acceptance No. 12-0917.02
Expiration Date 09/11/2018
By
Miami Dade Product Control

Engr: JAVAD AHMAD
CIVIL
FLA. PE # 70592
C.A.N. 3538

JAN 25 2013

**AL-FAROOQ CORPORATION**
ENGINEERS & PRODUCT DEVELOPMENT
1235 S.W. 87 AVE
MIAMI, FLORIDA 33174
TEL. (305) 264-8100 FAX. (305) 262-6978
COMP-ANL\W08-29RC-REV

SERIES-DM12 ALUM SLD. GLASS DOOR (L.M.I.)

R.C. ALUMINUM INDUSTRIES INC.
2805 N.W. 75 TH AVE.
MIAMI, FL. 33122
TEL. (305) 592-1515 FAX. (305) 592-2184

revisions:

| no | date | by | description |
|---|---|---|---|
| A | 07.19.12 | | GENERAL REVISION |
| B | 01.15.13 | | REV. PER RER COMMENTS |

date: 03-20-08
scale: –
dr. by: HAMID
chk. by:

drawing no.
W08-29

sheet 4 of 14

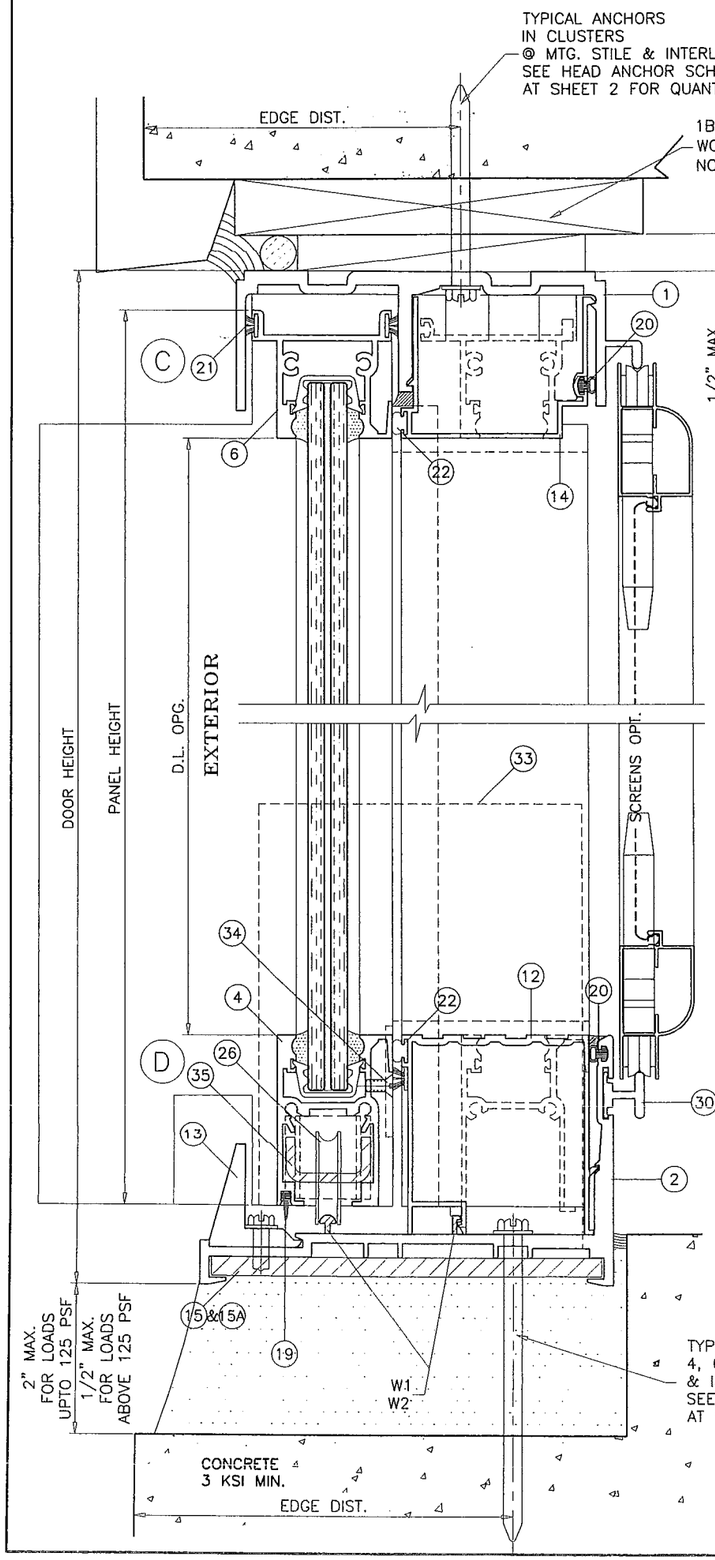


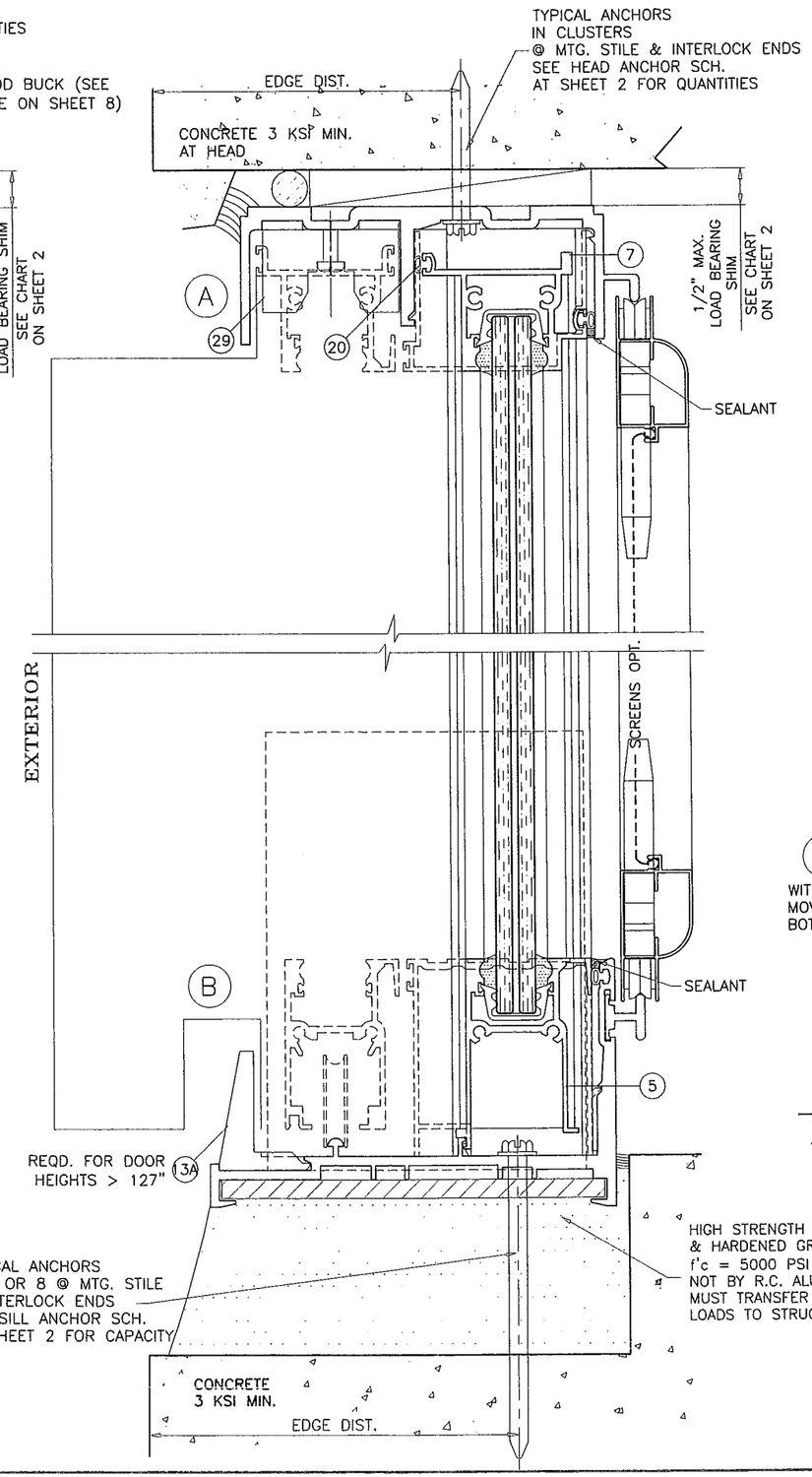


## SEALANTS:

ALL FRAME AND PANEL JOINT, INSTALLATION SCREWS AND HEADS OF ANCHOR SCREWS AT SILL TO BE SEALED WITH WHITE/ALUM COLORED SEALANT.

## LOCKS:

SURFACE MOUNT THREE PLY HOOK LOCK BY 'INTERLOCK' AT 41-1/2" FROM BOTTOM WITH WITH KEEPERS AT LOCK POSITION.

## WEEPS:

W1 = 2-1/2" WEEP NOTCH AT SILL CENTER
W2 = 1" NOTCH AT EACH END

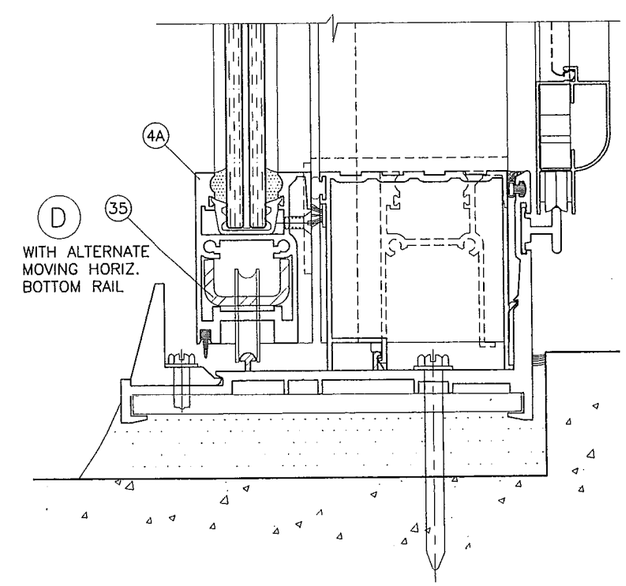


Engr: JAVAD AHMAD
CIVIL
FLA. PE # 70592
C.A.N. 3538

JAN 23 2013

PRODUCT RENEWED
as complying with the Florida
Building Code
Acceptance No 12-0917.02
Expiration Date 09/11/2018
By
Miami Dade Product Control


AL-FAROOQ CORPORATION
ENGINEERS & PRODUCT DEVELOPMENT
1235 S.W. 87 AVE
MIAMI, FLORIDA 33174
TEL. (305) 264-8100 FAX. (305) 262-6978
COMP-ANL\W08-29RC-REV


SERIES-DM12 ALUM SLD. GLASS DOOR (L.M.I.)


R.C. ALUMINUM INDUSTRIES INC.
2805 N.W. 75 TH AVE.
MIAMI, FL. 33122
TEL. (305) 592-1515 FAX. (305) 592-2184


revisions:

| no | date | by | description |
|---|---|---|---|
| A | 07.19.12 | | GENERAL REVISION |
| B | 01.15.13 | | REV. PER RER COMMENTS |

date: 03-20-08
scale: 1/2" = 1"
dr. by: HAMID
chk. by:

drawing no.
W08-29

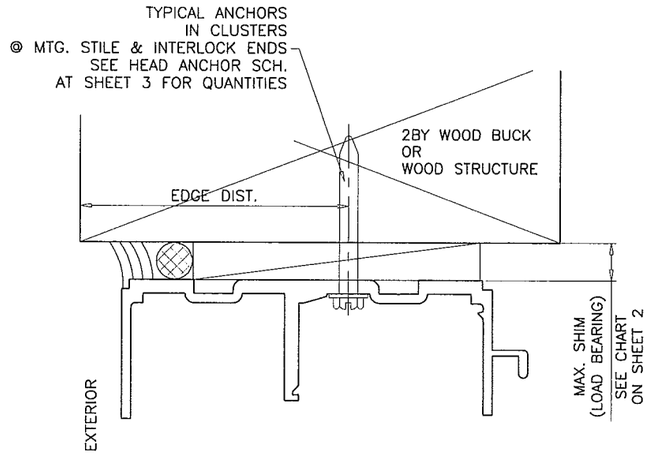


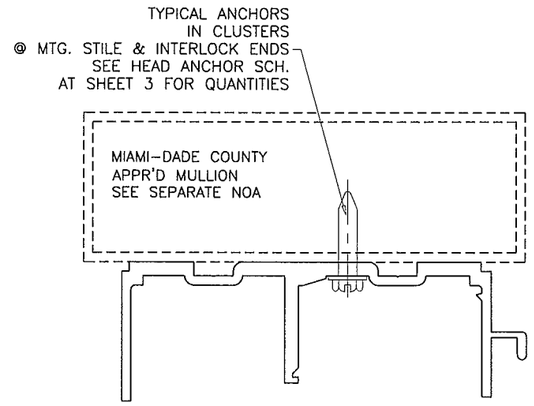


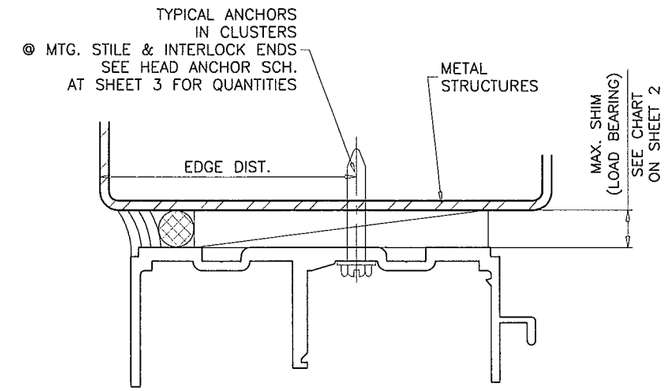


TYPICAL ANCHORS: SEE ELEV. FOR SPACING

— AT HEAD —

TYPE 'A'

1/4" X 2-3/4" HILTI KWIK-CON II (Fu=163 KSI, Fy=157 KSI)
THRU 1BY (1-1/4" EMBED) OR 2BY WOOD BUCKS INTO CONCRETE

TYPE 'B'

1/4" X 2-3/4" HILTI KWIK-CON II (Fu=163 KSI, Fy=157 KSI)
DIRECTLY INTO CONCRETE, 1-3/4" MIN. EMBEDMENT

TYPE 'C'

1/4" TEKS OR SELF DRILLING SCREWS (Fu=92 KSI, Fy=120 KSI)
INTO METAL STRUCTURES OR APPROVED MULLIONS
STEEL : 1/8" THK. MIN. (Fy = 36 KSI MIN.)
ALUMINUM : 1/8" THK. MIN. (6063-T5 MIN.)
(STEEL IN CONTACT WITH ALUMINUM TO BE PLATED OR PAINTED)

— AT SILL —

TYPE 'D'

1/4" DIA HILTI KWIK-CON II (Fu=163 KSI, Fy=157 KSI)
DIRECTLY INTO CONCCRETE, 1-3/4" MIN. EMBEDMENT

— AT JAMBS —

1/4" DIA. HILTI KWIK-CON II (Fu=163 KSI, Fy=157 KSI)
THRU 1BY BUCKS, 1-1/4" MIN. CONC. OR MASONRY EMBED.
INTO 2BY BUCKS, 1-1/2" MIN. WOOD EMBEDMENT
DIRECTLY INTO MASONRY OR CONCRETE
1-1/4" MIN. MASONRY OR CONCRETE EMBEDMENT

1/4" TEKS OR SELF DRILLING SCREWS (Fu=92 KSI, Fy=120 KSI)
INTO METAL STRUCTURES OR APPROVED MULLIONS
STEEL : 1/8" THK. MIN. (Fy = 36 KSI MIN.)
ALUMINUM : 1/8" THK. MIN. (6063-T5 MIN.)
(STEEL IN CONTACT WITH ALUMINUM TO BE PLATED OR PAINTED)

ANCHOR EDGE DISTANCES

INTO CONCRETE = 2-1/2" MIN.
INTO WOOD STRUCTURE = 1" MIN.
INTO METAL STRUCTURE = 3/4" MIN.

CONCRETE AT HEAD, SILL OR JAMBS f'c = 3000 PSI MIN.
C-90 HOLLOW/FILLED BLOCK AT JAMBS f'm = 2000 PSI MIN.

1BY OR 2BY WOOD BUCKS AND METAL STRUCTURES NOT BY RC ALUM MUST SUPPORT LOADS IMPOSED BY GLAZING SYSTEM AND TRANSFER THEM TO THE BUILDING STRUCTURE.

Engr: JAVAD AHMAD
CIVIL
FLA. PE # 70592
C.A.N. 3538

JAN 25 2013

PRODUCT RENEWED
as complying with the Florida
Building Code
Acceptance No 12-0917.02
Expiration Date 09/11/2018
By
Miami Dade Product Control

AL-FAROOQ CORPORATION
ENGINEERS & PRODUCT DEVELOPMENT
1235 S.W. 87 AVE
MIAMI, FLORIDA 33174
TEL. (305) 264-8100 FAX. (305) 262-6978

COMP-ANL\W08-29RC-REV

SERIES-DM12 ALUM SLD. GLASS DOOR (L.M.I.)

R.C. ALUMINUM INDUSTRIES INC.
2805 N.W. 75 TH AVE.
MIAMI, FL. 33122
TEL. (305) 592-1515 FAX. (305) 592-2184

revisions:

| no | date | by | description |
|---|---|---|---|
| A | 07.19.12 | | GENERAL REVISION |
| B | 01.15.13 | | REV. PER RER COMMENTS |

date: 03-20-08
scale: 1/2" = 1"
dr. by: HAMID
chk. by:

drawing no.
W08-29

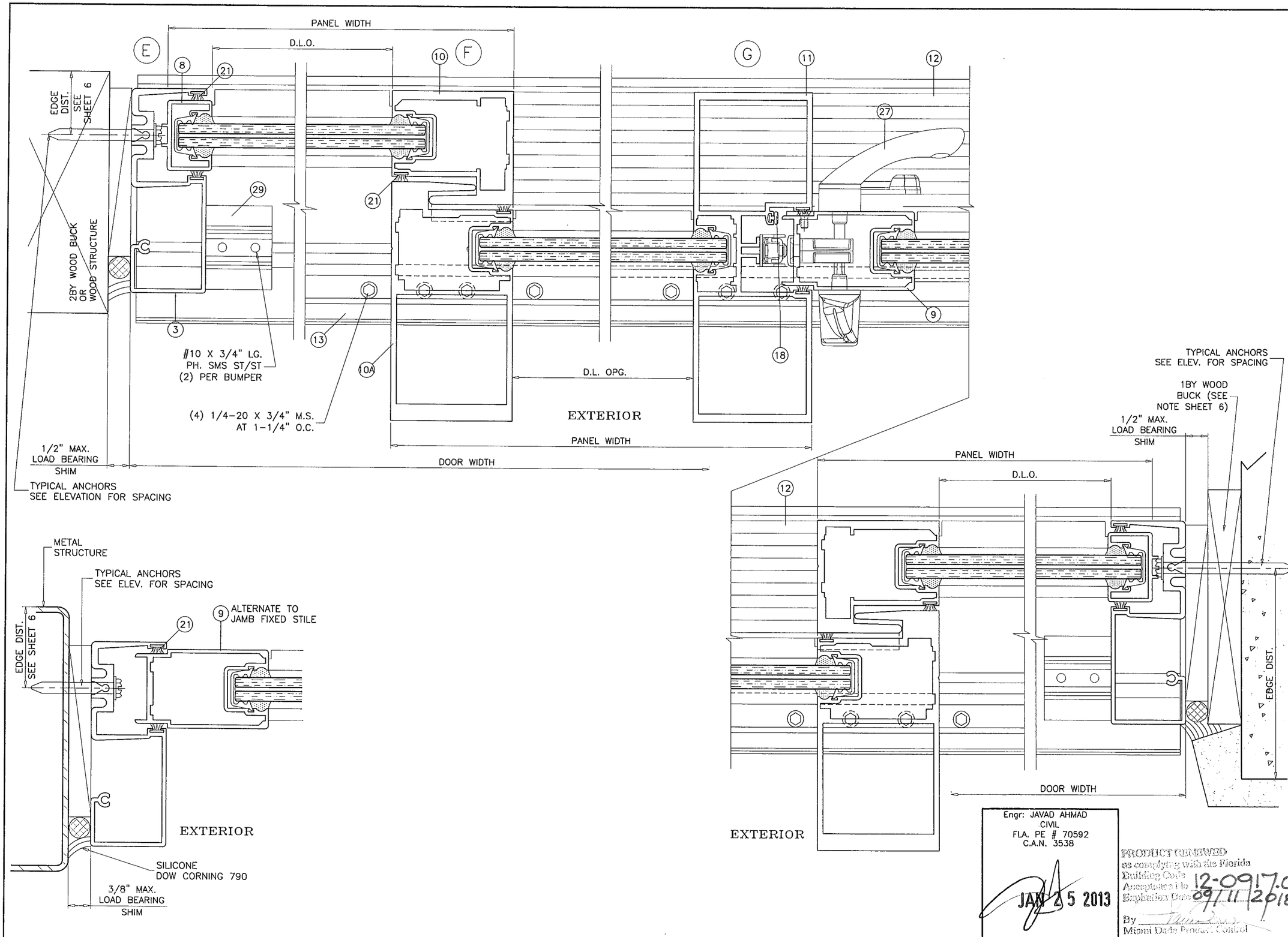


Engr: JAVAD AHMAD
CIVIL
FLA. PE # 70592
C.A.N. 3538

JAN 25 2013

PRODUCT RENEWED
as complying with the Florida
Building Code
Acceptance Lib 12-0917.02
Expiration Date 09/11/2018
By
Miami Dade Product Control

**AL-FAROOQ CORPORATION**
ENGINEERS & PRODUCT DEVELOPMENT
1235 S.W. 87 AVE
MIAMI, FLORIDA 33174
TEL. (305) 264-8100 FAX. (305) 262-6978
COMP-ANL\W08-29RC-REV

SERIES-DM12 ALUM SLD. GLASS DOOR (L.M.I.)

R.C. ALUMINUM INDUSTRIES INC.
2805 N.W. 75 TH AVE.
MIAMI, FL. 33122
TEL. (305) 592-1515 FAX. (305) 592-2184

revisions:

| no | date | by | description |
|---|---|---|---|
| A | 07.19.12 | | GENERAL REVISION |
| B | 01.15.13 | | NO CHANGE THIS SHEET |

date: 03-20-08
scale: 1/2" = 1"
dr. by: HAMID
chk. by:

drawing no.
W08-29

sheet 7 of 14

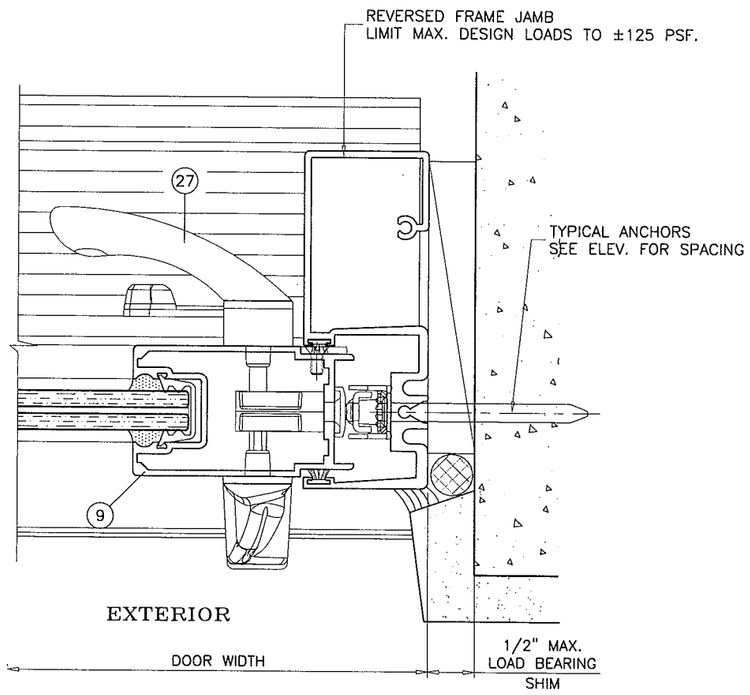


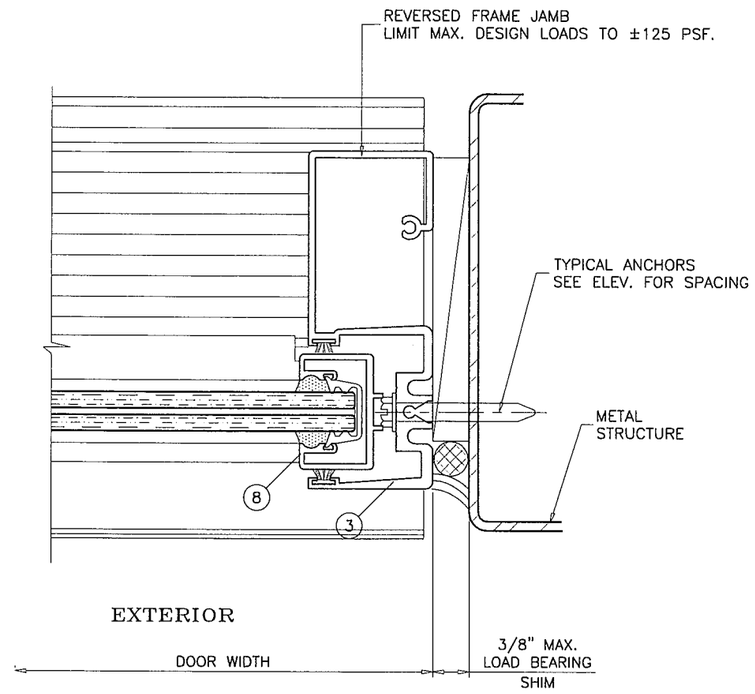


Engr: JAVAD AHMAD
CIVIL
FLA. PE # 70592
C.A.N. 3538

JAN 25 2013

PRODUCT RENEWED
as complying with the Florida
Building Code
Acceptance No. 12-0917.02
Expiration Date 09/11/2018
By
Miami Dade Product Control


AL-FAROOQ CORPORATION
ENGINEERS & PRODUCT DEVELOPMENT
1235 S.W. 87 AVE
MIAMI, FLORIDA 33174
TEL. (305) 264-8100 FAX. (305) 262-6978
COMP-ANL\W08-29RC-REV


SERIES-DM12 ALUM SLD. GLASS DOOR (L.M.I.)

R.C. ALUMINUM INDUSTRIES INC.
2805 N.W. 75 TH AVE.
MIAMI, FL. 33122
TEL. (305) 592-1515 FAX. (305) 592-2184

revisions:

| no | date | by | description |
|---|---|---|---|
| A | 07.19.12 | | GENERAL REVISION |
| B | 01.15.13 | | NO CHANGE THIS SHEET |

date: 03-20-08
scale: 1/2" = 1"
dr. by: HAMID
chk. by:

drawing no.
W08-29

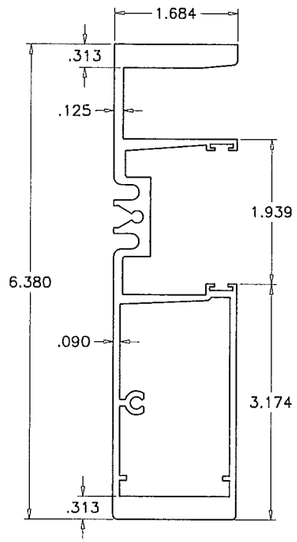


| Ix IN^4 | Sx IN^3 |
|---|---|
| 13.025 | 4.031 |

(37) FREE STANDING FRAME JAMB FIXED SIDE

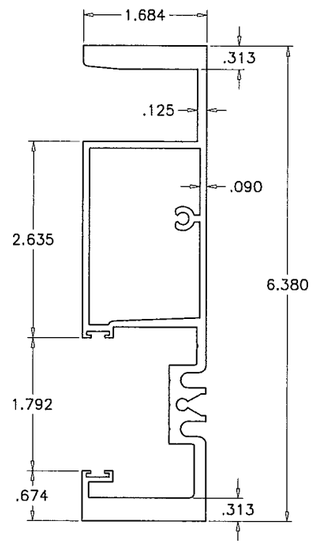


| Ix IN^4 | Sx IN^3 |
|---|---|
| 13.336 | 4.051 |

(38) FREE STANDING FRAME JAMB OPERABLE SIDE

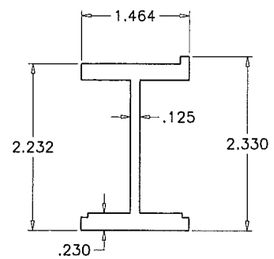


| Ix IN^4 | Sx IN^3 |
|---|---|
| .7320 | .6095 |

(39) JAMB STIFFENER

| FREE STANDING JAMB CAPACITY | | | |
|---|---|---|---|
| MAX. PANEL WIDTH INCHES | DOOR HEIGHT INCHES | WITHOUT STIFFENER | WITH STIFFENER |
| | | EXT.(+)/INT.(-) | EXT.(+)/INT.(-) |
| 48 | 138 | 125.0 | 125.0 |
| 48 | 144 | 117.7 | 125.0 |

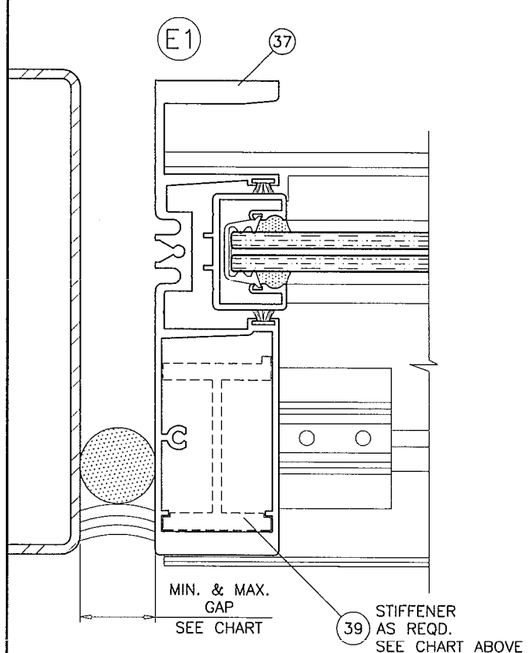


FREE STANDING JAMB FIXED SIDE

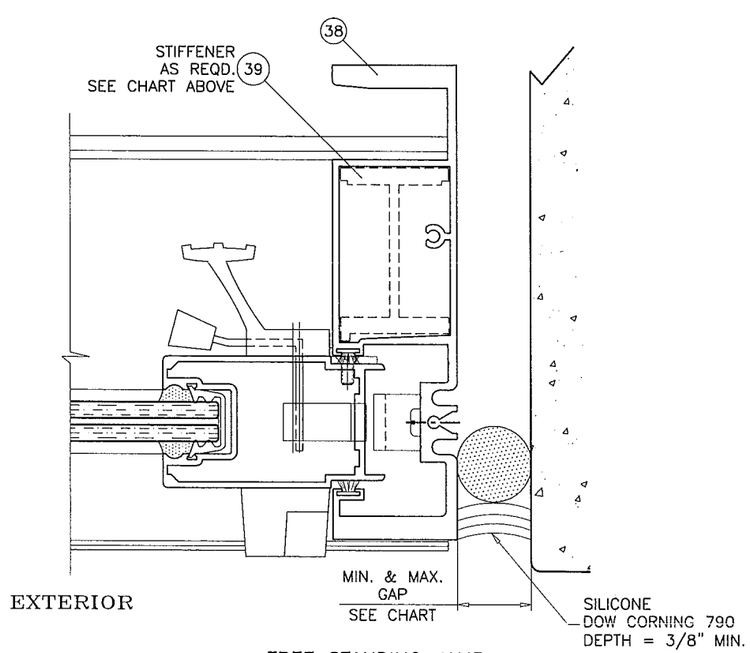


FREE STANDING JAMB OPERABLE SIDE

| MAX. FRAME HEIGHT | GAP | |
|---|---|---|
| | MIN. | MAX. |
| 84" | 7/16" | 1" |
| 108" | 1/2" | 1" |
| 120" | 5/8" | 1" |
| 144" | 11/16" | 1" |

Engr: JAVAD AHMAD
CIVIL
FLA. PE # 70592
C.A.N. 3538

JAN 25 2013

PRODUCT RENEWED
as complying with the Florida
Building Code
Acceptance No 12-0917.02
Expiration Date 09/11/2018
By
Miami Dade Product Control


AL-FAROOQ CORPORATION
ENGINEERS & PRODUCT DEVELOPMENT
1235 S.W. 87 AVE
MIAMI, FLORIDA 33174
TEL. (305) 264-8100 FAX. (305) 262-6978
COMP-ANL\W08-29RC-REV


SERIES-DM12 ALUM SLD. GLASS DOOR (L.M.I.)


R.C. ALUMINUM INDUSTRIES INC.
2805 N.W. 75 TH AVE.
MIAMI, FL. 33122
TEL. (305) 592-1515 FAX. (305) 592-2184


revisions:

| no | date | by | description |
|---|---|---|---|
| A | 07.19.12 | | GENERAL REVISION |
| B | 01.15.13 | | NO CHANGE THIS SHEET |

date: 03-20-08
scale: 1/2" = 1"
dr. by: HAMID
chk. by:

drawing no. W08-29

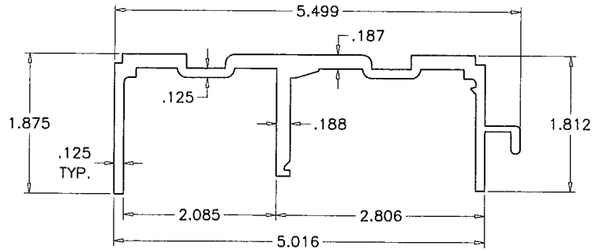


(1) FRAME HEAD (2400ST-038)

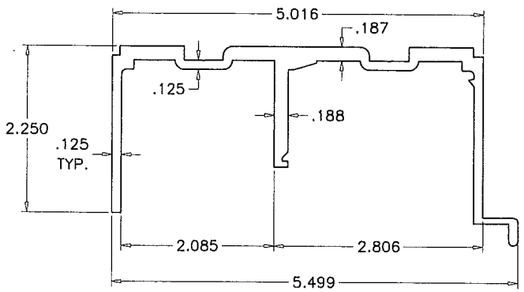


(1B) ALT. FRAME HEAD (2400ST-066)

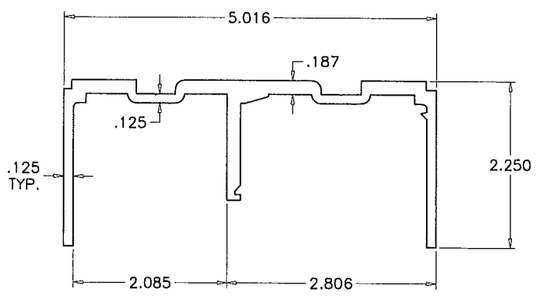


(1C) ALT. FRAME HEAD (2400ST-066A)

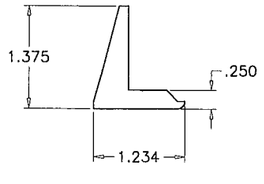


(13) SILL ANCHOR (2400ST-011)

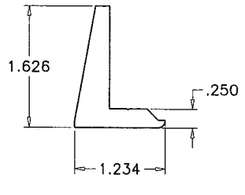


(13A) SILL ANCHOR (2400ST-067)

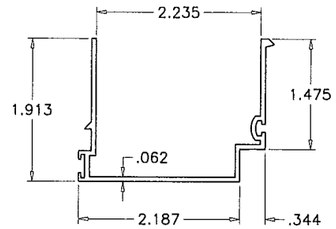


(14) HEAD ADAPTER (2400ST-019)

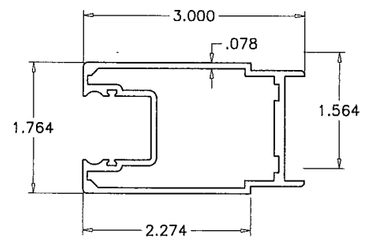


(9) LOCK STILE (2400ST-002)

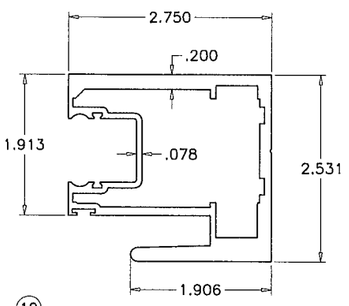


(10) INTERIOR INTERLOCK (2400ST-037)

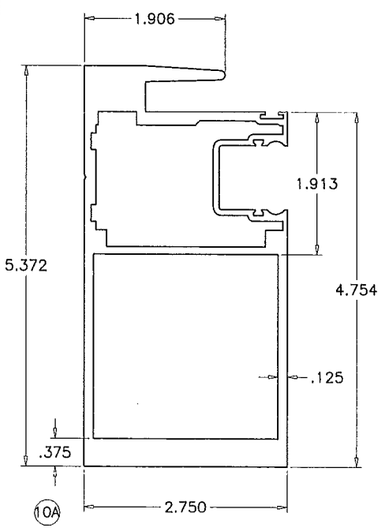


(10A) EXTERIOR INTERLOCK (2400ST-061)

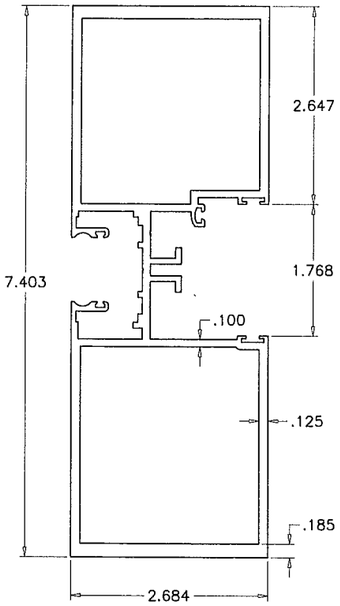


(11) MTG. STILE (2400ST-063)

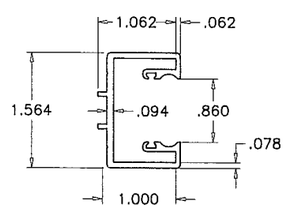


(8) FIXED STILE (2400ST-004)

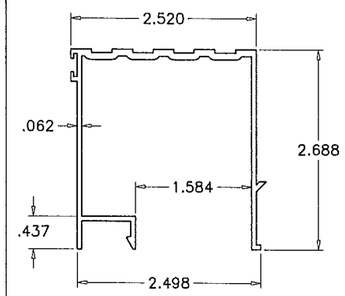


(12) THRESHOLD (2400ST-012)

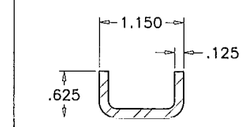


(35) MOV. PANEL REINF.

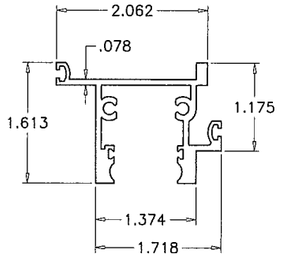


(7) FIX. TOP RAIL (2400ST-007)

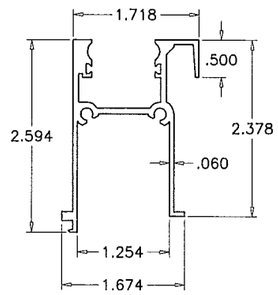


(5) FIX. BOTTOM RAIL (2400ST-009)

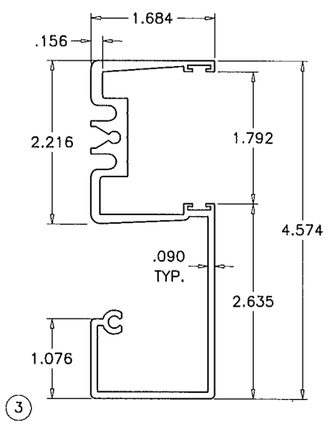


(3) FRAME JAMB (2400ST-042)

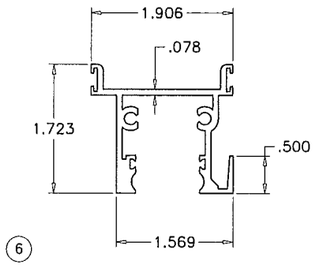


(6) MOV. TOP RAIL (2400ST-006)

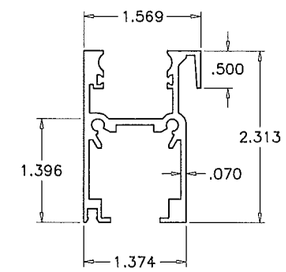


(4) MOVING BOTTOM RAIL (2400ST-008)

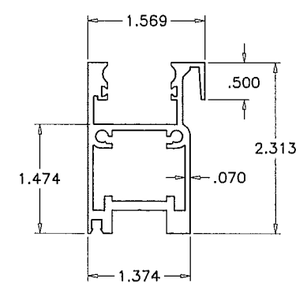


(4A) MOVING BOTTOM RAIL (2400ST-069)

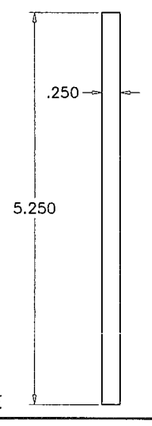


(15) (15A) SILL TRACK PLATE

Engr: JAVAD AHMAD
CIVIL
FLA. PE # 70592
C.A.N. 3538

JAN 25 2013

PRODUCT RENEWED
as complying with the Florida
Building Code
Acceptance No. 12-0917.02
Expiration Date 09/11/2018
By
Miami Dade

**AL-FAROOQ CORPORATION**
ENGINEERS & PRODUCT DEVELOPMENT
1235 S.W. 87 AVE
MIAMI, FLORIDA 33174
TEL. (305) 264-8100 FAX. (305) 262-6978

COMP-ANL\W08-29RC-REV

SERIES-DM12 ALUM SLD. GLASS DOOR (L.M.I.)

R.C. ALUMINUM INDUSTRIES INC.
2805 N.W. 75 TH AVE.
MIAMI, FL. 33122
TEL. (305) 592-1515 FAX. (305) 592-2184

revisions:

| no | date | by | description |
|---|---|---|---|
| A | 07.19.12 | | GENERAL REVISION |
| B | 01.15.13 | | NO CHANGE THIS SHEET |

date: 03-20-08
scale: 1/2" = 1"
dr. by: HAMID
chk. by:

drawing no.
W08-29

sheet 10 of 14

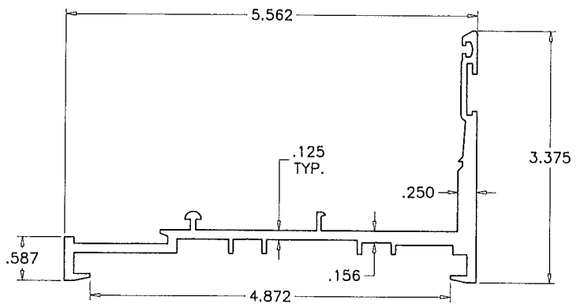


(2) FRAME SILL (2400ST-039)

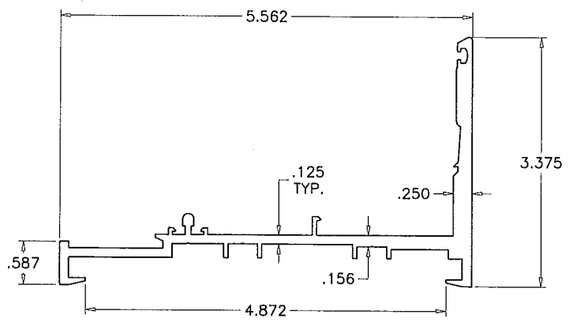


(2A) ALT. FRAME SILL (2400ST-082A)

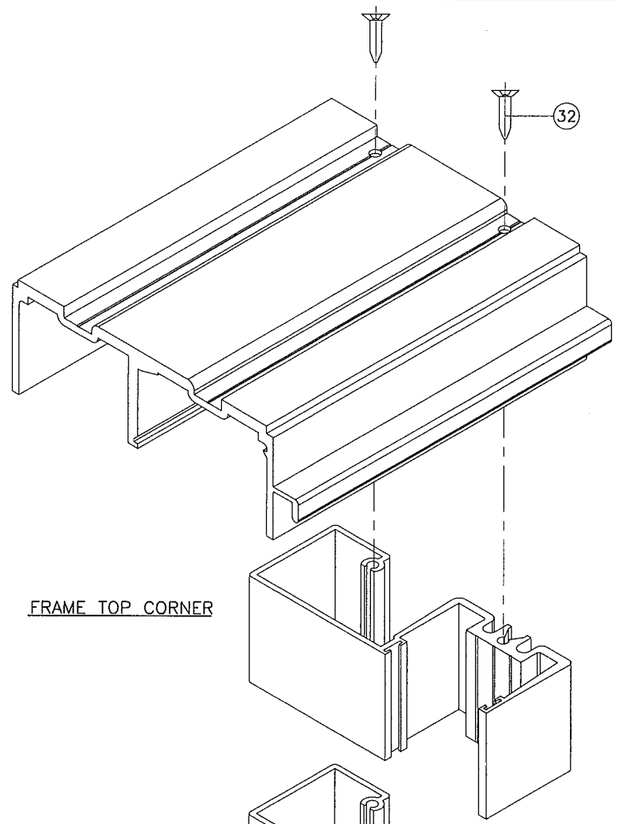


FRAME TOP CORNER

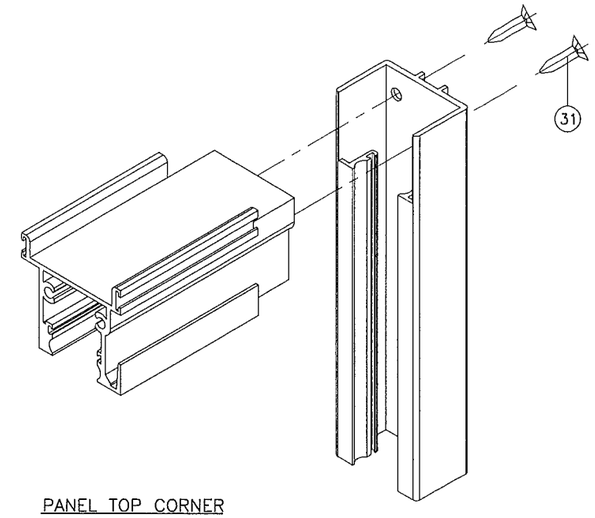


PANEL TOP CORNER

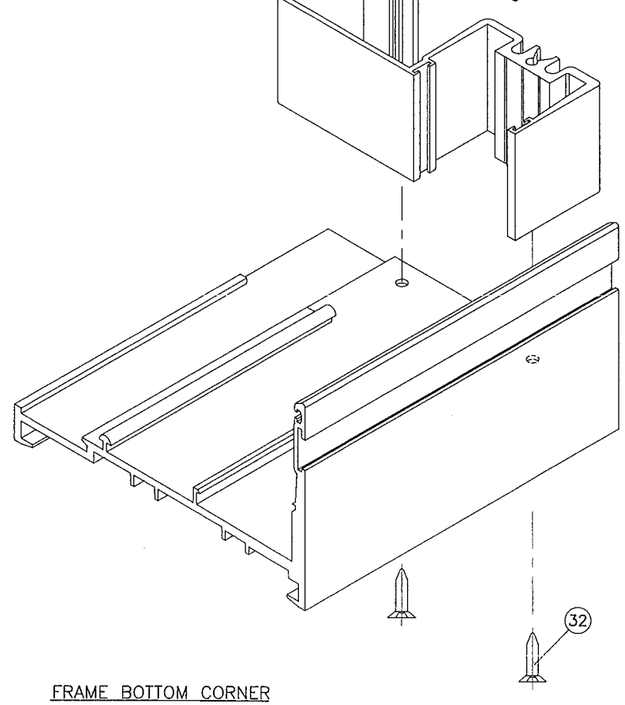


FRAME BOTTOM CORNER

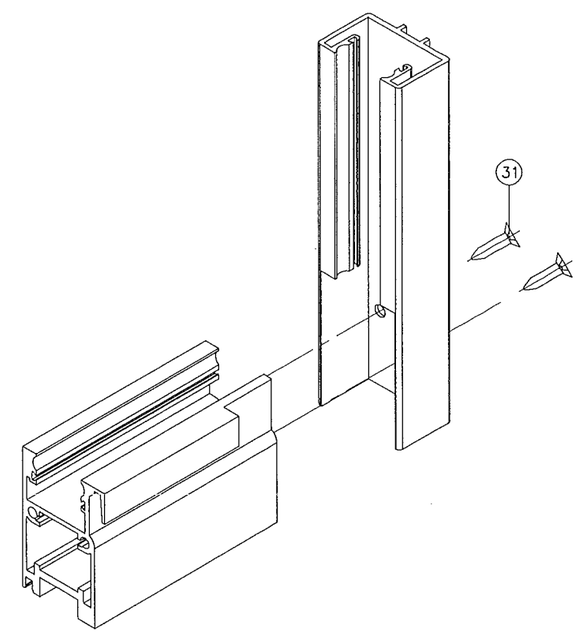


PANEL BOTTOM CORNER

Engr: JAVAD AHMAD
CIVIL
FLA. PE # 70592
C.A.N. 3538

JAN 2 5 2013

PRODUCT RENEWED
as complying with the Florida
Building Code
Acceptance #'s 12-0917.02
Expiration Date 09/11/2018
By
Miami Dade Product Coat.


AL-FAROOQ CORPORATION
ENGINEERS & PRODUCT DEVELOPMENT
1235 S.W. 87 AVE
MIAMI, FLORIDA 33174
TEL. (305) 264-8100 FAX. (305) 262-6978


COMP-ANL\W08-29RC-REV

SERIES-DM12 ALUM SLD. GLASS DOOR (L.M.I.)


R.C. ALUMINUM INDUSTRIES INC.
2805 N.W. 75 TH AVE.
MIAMI, FL. 33122
TEL. (305) 592-1515 FAX. (305) 592-2184


revisions:

| no | date | by | description |
|---|---|---|---|
| A | 07.19.12 | | GENERAL REVISION |
| B | 01.15.13 | | NO CHANGE THIS SHEET |

date: 03-20-08
scale: 1/2" = 1"
dr. by: HAMID
chk. by:

drawing no.
W08-29

sheet 11 of 14

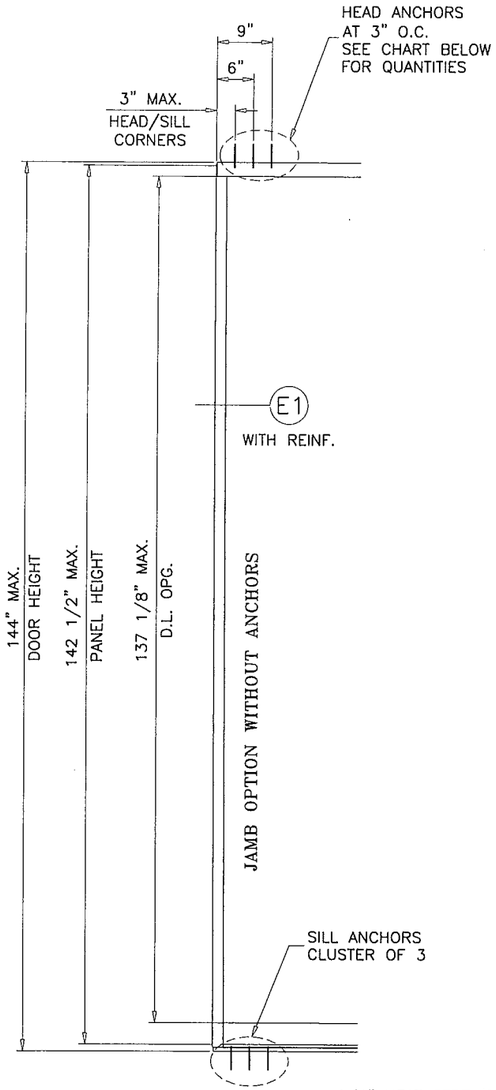


FREE STANDING JAMB
SEE SHEET 9 FOR DETAILS

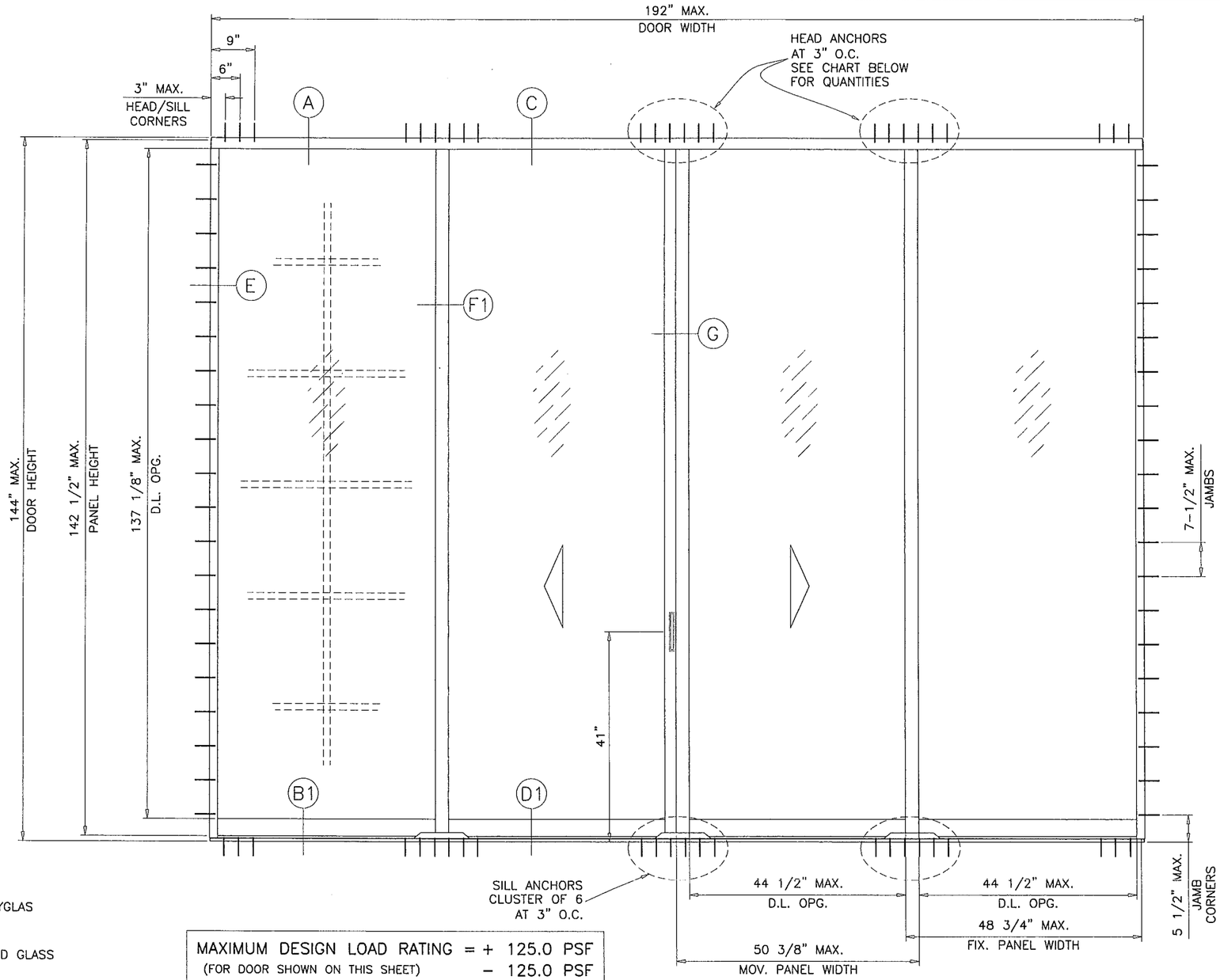


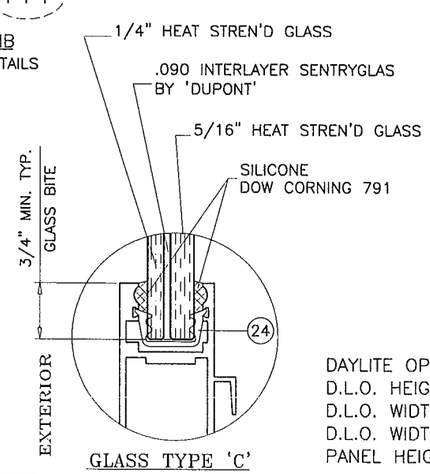


GLASS TYPE 'C'

MAXIMUM DESIGN LOAD RATING = + 125.0 PSF
(FOR DOOR SHOWN ON THIS SHEET) − 125.0 PSF
GLASS TYPE 'C' ONLY

DAYLITE OPENINGS:
D.L.O. HEIGHT = PANEL HEIGHT − 5.375"
D.L.O. WIDTH (FIX. PANEL) = PANEL WIDTH − 4.250"
D.L.O. WIDTH (OPER. PANEL) = PANEL WIDTH − 5.875"
PANEL HEIGHT = DOOR HEIGHT − 1.500"

HEAD ANCHOR CHART

| ANCHOR TYPE | MAX. SHIM | NO. OF ANCHORS REQUIRED | |
|---|---|---|---|
| | | AT MTG. STILE ENDS | AT FREE STAND. JAMB |
| A | 1/2" | 10 | 5 |
| B | 1/4" | 6 | 3 |
| | 3/8" | 7 | 4 |
| | 1/2" | 8 | 4 |
| C | 1/4" | 6 | 3 |
| | 3/8" | 12 | 6 |
| | 1/2" | 15 | 8 |

Engr: JAVAD AHMAD
CIVIL
FLA. PE # 70592
C.A.N. 3538

JAN 25 2013

PRODUCT RENEWED
as complying with the Florida
Building Code
Acceptance No 12-0917.02
Expiration Date 09/11/2018
By
Miami Dade Product Control


AL-FAROOQ CORPORATION
ENGINEERS & PRODUCT DEVELOPMENT
1235 S.W. 87 AVE
MIAMI, FLORIDA 33174
TEL. (305) 264-8100 FAX. (305) 262-6978
COMP-ANL\W08-29RC-REV


SERIES-DM12 ALUM SLD. GLASS DOOR (L.M.I.)


R.C. ALUMINUM INDUSTRIES INC.
2805 N.W. 75 TH AVE.
MIAMI, FL. 33122
TEL. (305) 592-1515 FAX. (305) 592-2184


revisions:

| no | date | by | description |
|---|---|---|---|
| A | 07.19.12 | | GENERAL REVISION |
| B | 01.15.13 | | REV. PER RER COMMENTS |

date: 03-20-08
scale: 1/2"=1'-0"
dr. by: HAMID
chk. by:

drawing no.
W08-29

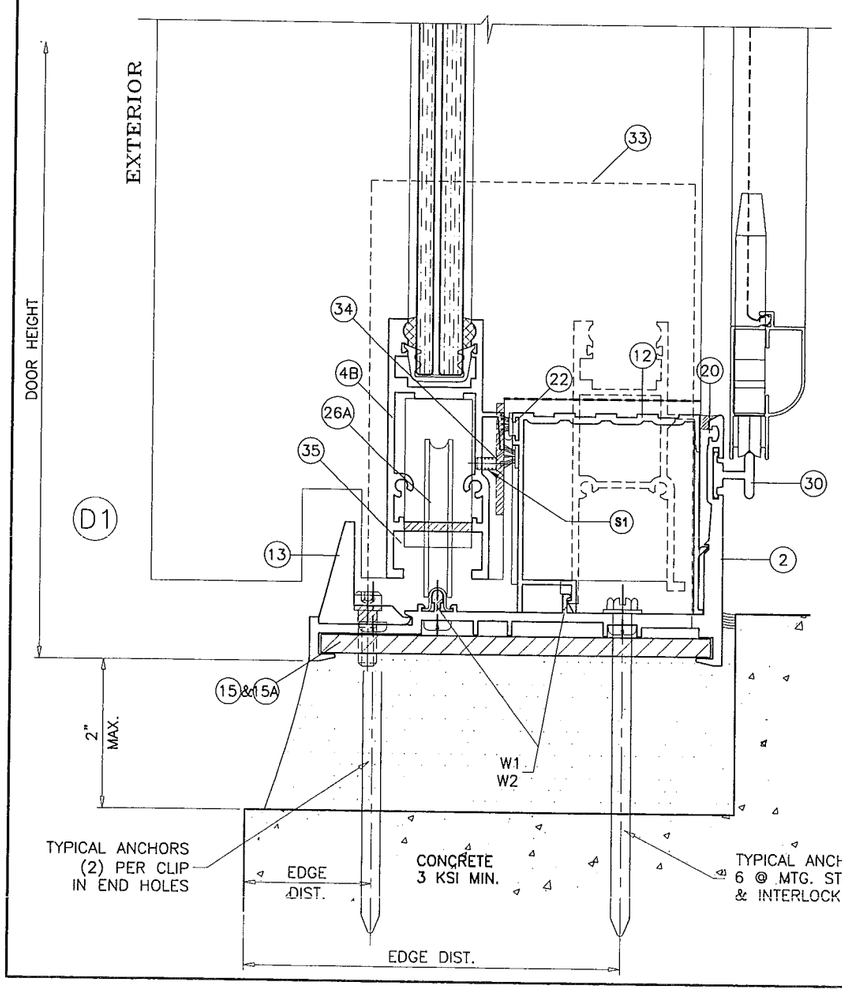


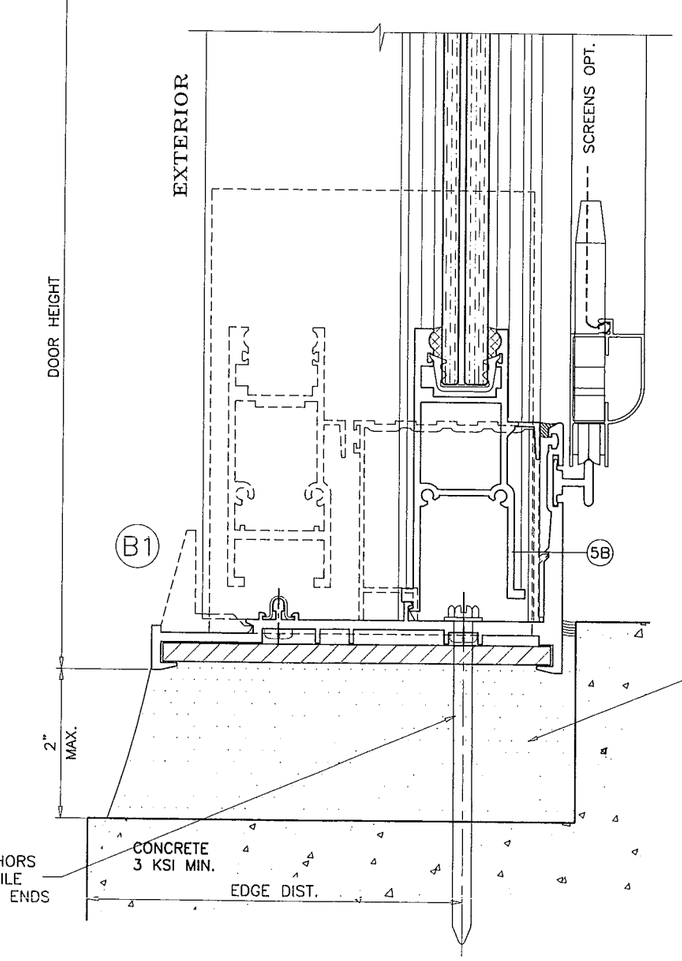


HIGH STRENGTH POURED
& HARDENED GROUT
f'c = 5000 PSI MIN.
NOT BY R.C. ALUM
MUST TRANSFER SHEAR
LOADS TO STRUCTURE

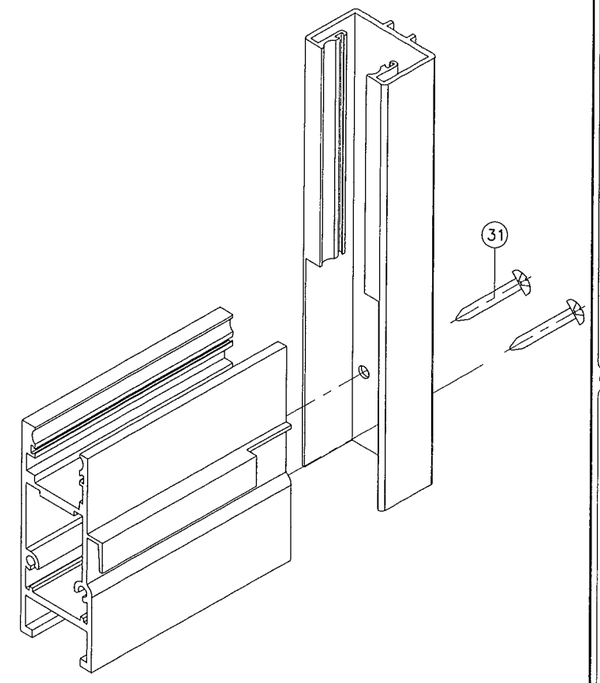


PANEL BOTTOM CORNER

Engr: JAVAD AHMAD
CIVIL
FLA. PE # 70592
C.A.N. 3538

JAN 25 2013

PRODUCT RENEWED
as complying with the Florida
Building Code
Acceptance No. 12-0917.02
Expiration Date 09/11/2018
By
Miami Dade Product Control

**AL-FAROOQ CORPORATION**
ENGINEERS & PRODUCT DEVELOPMENT
1235 S.W. 87 AVE
MIAMI, FLORIDA 33174
TEL. (305) 264-8100 FAX. (305) 262-6978
COMP-ANL\W08-29RC-REV

SERIES-DM12 ALUM SLD. GLASS DOOR (L.M.I.)

R.C. ALUMINUM INDUSTRIES INC.
2805 N.W. 75 TH AVE.
MIAMI, FL. 33122
TEL. (305) 592-1515 FAX. (305) 592-2184

revisions:

| no | date | by | description |
|---|---|---|---|
| A | 07.19.12 | | GENERAL REVISION |
| B | 01.15.13 | | NO CHANGE THIS SHEET |

date: 03-20-08
scale: 1/2" = 1"
dr. by: HAMID
chk. by:

drawing no.
W08-29

sheet 13 of 14

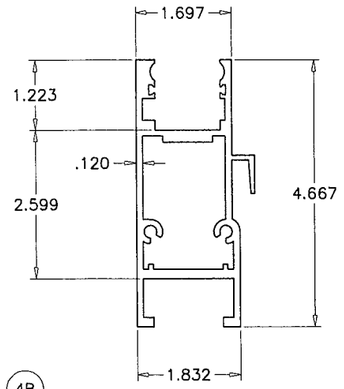


4B

MOVING BOTTOM RAIL (2400ST-084)

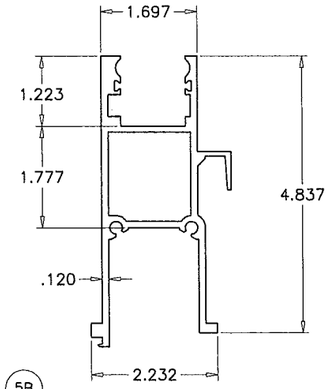


5B

FIX. BOTTOM RAIL (2400ST-007)

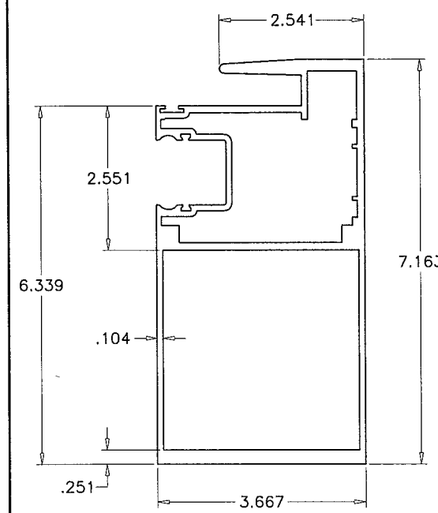


10B

INTERLOCK STILE OUTSIDE (2400ST-062)

## LOCKS:

THREE PLY METALLIC FOUR POINT LOCK SYSTEM WITH SURFACE MOUNT METALLIC HANDLE AT 41" FROM BOTTOM.
LOCK FASTENED WITH (8) #10 X 1" PH SMS AND HANDLE FASTENED WITH (2) #8 X 2-3/8" OH MACHINE SCREWS.
SURFACE MOUNT METALLIC KEEPERS AT 14", 41" AND 68" FROM BOTTOM
FASTENED WITH (2) #10 X 3/4" PH SMS.

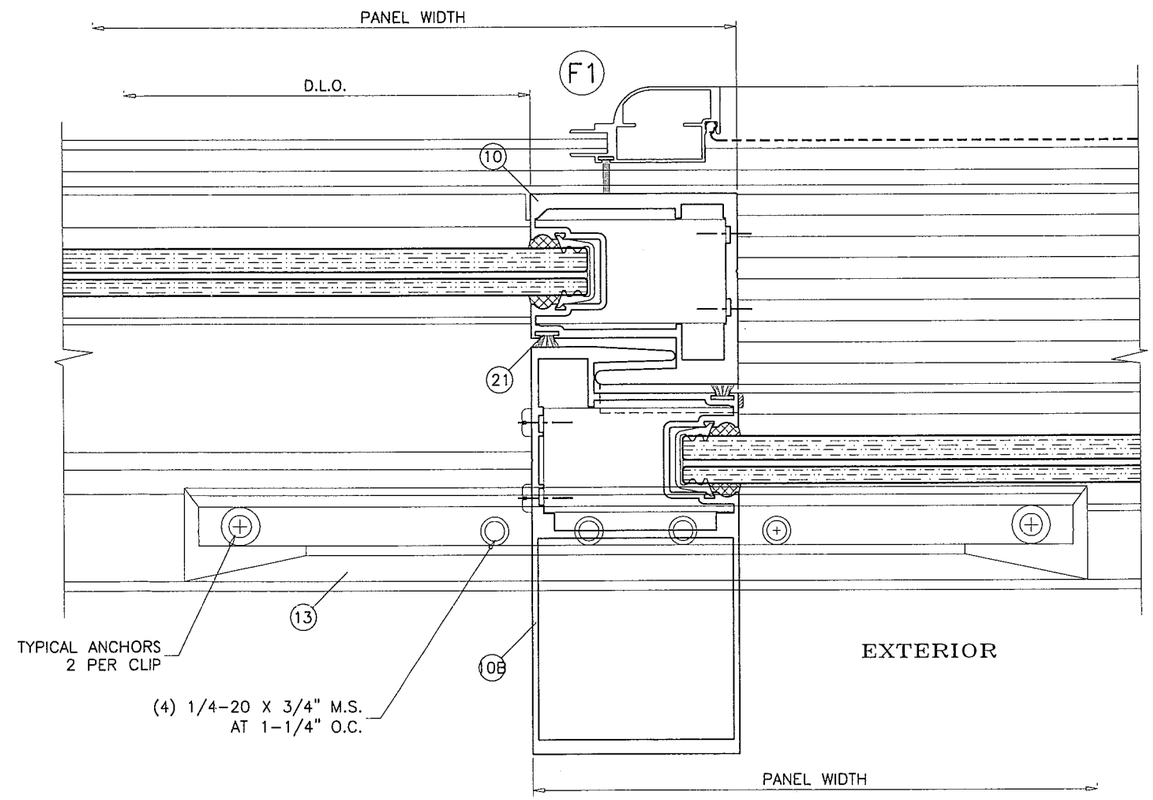


PRODUCT RENEWED
as complying with the Florida
Building Code
Acceptance No 12-0917.02
Expiration Date 09/11/2018
By
Miami Dade Product Control

Engr: JAVAD AHMAD
CIVIL
FLA. PE # 70592
C.A.N. 3538

JAN 25 2013


AL-FAROOQ CORPORATION
ENGINEERS & PRODUCT DEVELOPMENT
1235 S.W. 87 AVE
MIAMI, FLORIDA 33174
TEL. (305) 264-8100 FAX. (305) 262-6978


COMP-ANL\W08-29RC-REV

SERIES-DM12 ALUM SLD. GLASS DOOR (L.M.I.)


R.C. ALUMINUM INDUSTRIES INC.
2805 N.W. 75 TH AVE.
MIAMI, FL. 33122
TEL. (305) 592-1515 FAX. (305) 592-2184


revisions:

| no | date | by | description |
|---|---|---|---|
| A | 07.19.12 | | GENERAL REVISION |
| B | 01.15.13 | | NO CHANGE THIS SHEET |

date: 03-20-08
scale: 1/2" = 1"
dr. by: HAMID
chk. by:

drawing no.
W08-29