MIAMI-DADE COUNTY
PRODUCT CONTROL SECTION
11805 SW 26 Street, Room 208
Miami, Florida 33175-2474
T (786) 315-2590 F (786) 315-2599
www.miamidade.gov/economy

DEPARTMENT OF REGULATORY AND ECONOMIC RESOURCES (RER)
BOARD AND CODE ADMINISTRATION DIVISION

NOTICE OF ACCEPTANCE (NOA)

Quality Engineered Products Co., Inc.
4506 Quality Lane
Tampa, FL 33634

SCOPE:
This NOA is being issued under the applicable rules and regulations governing the use of construction materials. The documentation submitted has been reviewed and accepted by Miami-Dade County RER - Product Control Section to be used in Miami Dade County and other areas where allowed by the Authority Having Jurisdiction (AHJ).
This NOA shall not be valid after the expiration date stated below. The Miami-Dade County Product Control Section (In Miami Dade County) and/or the AHJ (in areas other than Miami Dade County) reserve the right to have this product or material tested for quality assurance purposes. If this product or material fails to perform in the accepted manner, the manufacturer will incur the expense of such testing and the AHJ may immediately revoke, modify, or suspend the use of such product or material within their jurisdiction. RER reserves the right to revoke this acceptance, if it is determined by Miami-Dade County Product Control Section that this product or material fails to meet the requirements of the applicable building code.
This product is approved as described herein, and has been designed to comply with the Florida Building Code, including the High Velocity Hurricane Zone.

DESCRIPTION: Series 16 ga Outswing Commercial Steel Doors w/wo Panic Exit Device-Impact

APPROVAL DOCUMENT: APPROVAL DOCUMENT: Drawing No. **16GACOSD-1**, titled "16 GA Commercial Outswing Steel Door", sheets 1 through 8 of 8, prepared by manufacturer, dated 05/06/04 and last revised on 02/01/2006, signed and sealed by David M. Schonacher Jr., P. E., bearing the Miami-Dade County Product Control Revision stamp with the Notice of Acceptance number and expiration date by the Miami-Dade County Product Control Section.

MISSILE IMPACT RATING: Large and Small Missile Impact Resistant
Limitations:
1. See Design Pressure ratings VS lock types in sheet 1.
2. EPS Polystyrene by Dyplast (former Apache Products).

LABELING: Each unit shall bear a permanent label with the manufacturer's name or logo, city, state and series and following statement: "Miami-Dade County Product Control Approved", noted herein.

RENEWAL of this NOA shall be considered after a renewal application has been filed and there has been no change in the applicable building code negatively affecting the performance of this product.

TERMINATION of this NOA will occur after the expiration date or if there has been a revision or change in the materials, use, and/or manufacture of the product or process. Misuse of this NOA as an endorsement of any product, for sales, advertising or any other purposes shall automatically terminate this NOA. Failure to comply with any section of this NOA shall be cause for termination and removal of NOA.

ADVERTISEMENT: The NOA number preceded by the words Miami-Dade County, Florida, and followed by the expiration date may be displayed in advertising literature. If any portion of the NOA is displayed, then it shall be done in its entirety.

INSPECTION: A copy of this entire NOA shall be provided to the user by the manufacturer or its distributors and shall be available for inspection at the job site at the request of the Building Official.
This NOA **revises & renews NOA # 07-1017.09** and consists of this page 1 and evidence pages E-1 & E-2, as well as approval document mentioned above.
The submitted documentation was reviewed by **Ishaq I. Chanda, P.E.**

MIAMI-DADE COUNTY APPROVED
1/17/13

NOTICE OF ACCEPTANCE: EVIDENCE SUBMITTED

A. DRAWINGS

1. Manufacturer's die drawings and sections (Submitted under file # **07-1017.09**)
2. **APPROVAL DOCUMENT:** Drawing No. **16GACOSD-1**, titled "16 GA Commercial Outswing Steel Door", sheets 1 through 8 of 8, prepared by manufacturer, dated 05/06/04 and last revised on 02/01/2006, signed and sealed by David M. Schonacher Jr. , P. E.

B. TESTS (Submitted under file # **07-1017.09/04-0220.02)**

1. Test reports on 1) Air Infiltration Test, per FBC TAS 202-94
   2) Uniform Static Air Pressure Test, Loading per FBC, TAS 202.
   3) Water Resistance Test per FBC, TAS 202-94 (Not Performed).
   4) Large Missile Impact Test per FBC, TAS 201-94
   5) Cyclic Wind Pressure Loading per FBC, TAS 203-94

   Along with marked-up drawings & installation diagram of Commercial Steel Doors w /Panic devices, prepared by Certified Testing Laboratories Inc., Test Report No. **CTLA 1276W,** dated Nov. 11, 2004, signed and sealed by Ramesh Patel, P. E.
   (Note: This test report has been revised under Test Report No. **CTLA 1276WR,** re-issued on Feb 01, 2005 by Certified Testing Laboratories, signed and sealed by Ramesh Patel, P. E.)
2. Test reports (Transferred from file # **04-0220.02)**
   1) Air Infiltration Test, per FBC TAS 202-94
   2) Uniform Static Air Pressure Test, Loading per FBC, TAS 202.
   3) Water Resistance Test per FBC, TAS 202-94 (Not Performed).
   4) Large Missile Impact Test per FBC, TAS 201-94
   5) Cyclic Wind Pressure Loading per FBC, TAS 203-94
   6) Forced Entry Test, per FBC and TAS 202-94

   Along with marked-up drawings and installation diagram of Steel Commercial Steel Doors, prepared by Certified Testing Laboratories Inc., Test Report No. **CTLA 114W,** dated December 09, 2003, signed and sealed by Ramesh Patel, P. E
   (Note: This test report has been revised by addendum letter dated May 26, 2004 & June 30, 2005, issued by Certified Testing Laboratories Inc.)
3. Additional test report **HTL-0050-1012-97** tested per FBC, TAS 202-94, issued by Hurricane testing laboratories, Inc. dated 10-16-98, signed and sealed by Timothy S. Marshall, P. E. (Transferred from file # 04-0220.02)

C. CALCULATIONS

1. Anchor verification calculations, dated 01/18/2006 and revised on 01-26-06, prepared, signed and sealed by David M. Schonacher Jr., P.E. (Submitted under file # **07-1017.09**)

D. QUALITY ASSURANCE

1 Miami Dade Department of Regulatory and Economic Resources (RER)

Ishaq I. Chanda

Ishaq I. Chanda, P.E.
Product Control Examiner
NOA No. 12-0921.12
Expiration Date: January 30, 2018
Approval Date: January 17, 2013

NOTICE OF ACCEPTANCE: EVIDENCE SUBMITTED

E. MATERIAL CERTIFICATIONS (Submitted under file # **07-1017.09/#04-0823.05)**

1. Tensile test report prepared by Certified Testing Laboratories Inc., Test Report No. **CTL 1023J (CTLA114W),** tested per ASTM E-A370-97, dated December 02,2003, signed and sealed by Ramesh Patel, P. E.
2. Notice of Acceptance No. **11-0926.07** issued to Dyplastic Products, LLC (former Apache Products Co) for "EPS-Expanded Polystyrene Insulation", expiring on 01/11/2017.

F. STATEMENTS

1. Statement letter of conformance to FBC 2010 and "no financial interest", dated 12/31/12, signed and sealed by David M. Schonacher Jr., P. E.
2. Statement letter of conformance and "no financial interest", dated 01-26-2006, signed and sealed by David M. Schonacher Jr. , P. E. (Submitted under file # **07-1017.09)**
3. Statement letter of compliance, as a part of the above referenced test reports.

G. OTHER

1. This **revises & renews NOA # 07-1017.09**, expiring January 30, 2013
2. Previous associated files with this NOA(s) are # **07-1017.09, 04-0220.02 & # 02-1011.05.**
3. Test Proposal by Q. E. P. dated September 19, 2002, approved by BCCO.

Ishaq I. Chanda

Ishaq I. Chanda, P.E.
Product Control Examiner
NOA No. 12-0921.12
Expiration Date: January 30, 2018
Approval Date: January 17, 2013

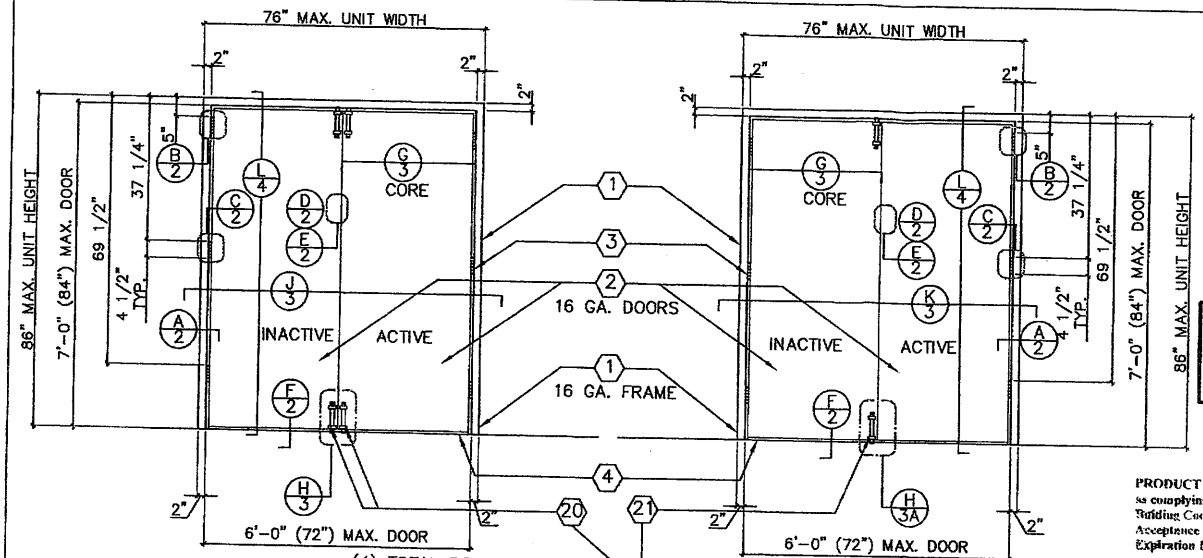

INTERIOR VIEW

(4) TOTAL ROCKWOOD 580 SURFACE BOLTS, (2) EXTERIOR OF ACTIVE, (2) INTERIOR OF INACTIVE

IVES 360 SURFACE BOLTS, (2) INTERIOR OF INACTIVE

INTERIOR VIEW

PRODUCT REVIEWED
as complying with the Florida Building Code
Acceptance No 12-0921.12
Expiration Date JAN 30, 2018
By Ishaq I. Chanda
Miami Dade Product Control

COMPLIANCE OF THESE UNITS TO FBC EGRESS/ESCAPE REQUIREMENTS TO BE REVIEWED BY BUILDING OFFICIAL ON A CASE BY CASE BASIS

PRODUCT RENEWED
as complying with the Florida Building Code
Acceptance No 07-1017.09
Expiration Date JAN 30, 2013
By Ishaq I. Chanda
Miami-Dade Product Control Division

PRODUCT REVISED
as complying with the Florida Building Code
Acceptance No 04-0823.05
Expiration Date JAN 30, 2008
By Ishaq I. Chanda
Miami Dade Product Control Division

LOCK TESTED: ITEM #9

PDQ MORTISE LOCK MODEL MR117

DESIGN PRESSURE RATING (OUTSWING DOUBLE DOORS) w/(4) ROCKWOOD SURFACE BOLTS

	WHERE WATER INFILTRATION REQUIREMENT IS NEEDED *	WHERE WATER INFILTRATION REQUIREMENT IS NOT NEEDED OR PROTECTED BY OVERHANG*
POSITIVE	NOT APPROVED WITHOUT OVERHANG *	+90 PSF
NEGATIVE	NOT APPROVED WITHOUT OVERHANG *	−90 PSF

* UNIT SHALL BE INSTALLED AT LOCATION PROTECTED BY OVERHANG SUCH THAT OVERHANG RATIO (OH) = OH LENGTH/OH HEIGHT IS GREATER THAN 1

LOCK TESTED: ITEM #22

SCHLAGE MORTISE LOCK MODEL L9453P
SARGENT MORTISE LOCK MODEL 8225NL

DESIGN PRESSURE RATING (OUTSWING DOUBLE DOORS) w/(2) IVES SURFACE BOLTS (INACTIVE DOOR LEAF)

	WHERE WATER INFILTRATION REQUIREMENT IS NEEDED *	WHERE WATER INFILTRATION REQUIREMENT IS NOT NEEDED OR PROTECTED BY OVERHANG*
POSITIVE	NOT APPROVED WITHOUT OVERHANG *	+70 PSF
NEGATIVE	NOT APPROVED WITHOUT OVERHANG *	−70 PSF

* UNIT SHALL BE INSTALLED AT LOCATION PROTECTED BY OVERHANG SUCH THAT OVERHANG RATIO (OH) = OH LENGTH/OH HEIGHT IS GREATER THAN 1

(X) = BILL OF MATERIALS REFERENCE, SEE SHEET 6 OF 8

FEB 01 2006

DAVID M. SCHONACHER, P.E.
FLORIDA REG. # 63181
(NOT VALID WITHOUT SEAL)

DRAWING NUMBER 16GACOSD-1

16 GA. COMMERCIAL OUTSWING STEEL DOOR

HURRICANE TEST APPROVAL
SERIES 16GACOSD
16 GAUGE COMMERCIAL
OUTSWING STEEL DOORS

REVISIONS
1 05-25-04
2 07-06-04
3 01-26-06

4506 QUALITY LANE
TAMPA, FLORIDA 33634
(813) 885-1693

Quality Engineered Products Co., Inc.

SHEET 1 OF 8

DATE: 5-6-04

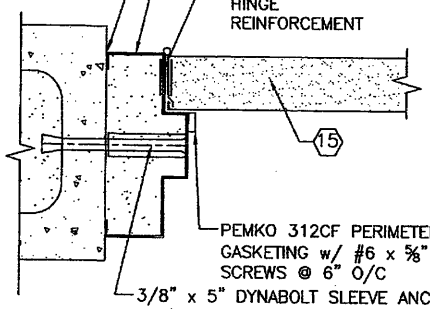

A2

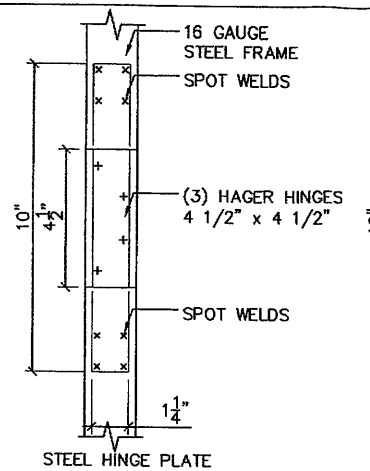

STEEL HINGE PLATE
7 GAUGE x 1 1/4" x 10"
FRAME HINGE REINFORCEMENT

B2

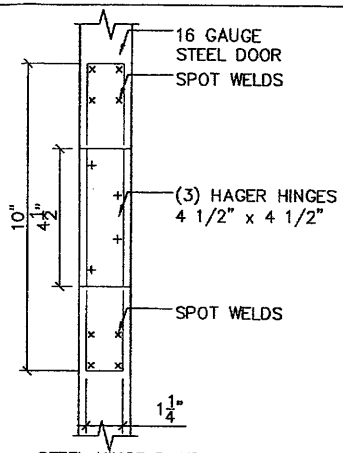

STEEL HINGE PLATE
7 GAUGE x 1 1/4" x 10"
DOOR HINGE REINFORCEMENT

C2

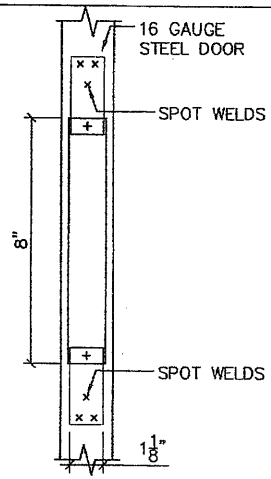

STEEL MORTISE LOCK
REINFORCEMENT
12 GAUGE x 1⅛" x 2½"

D2

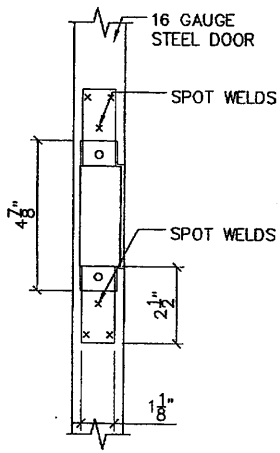

STEEL ASA STRIKE
REINFORCEMENT
12 GAUGE x 1⅛" x 2½"

E2

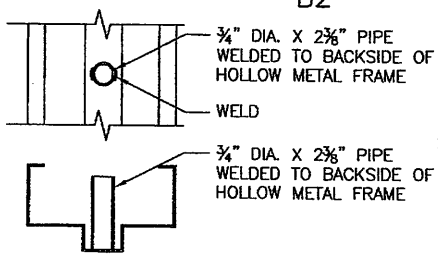

PIPE SLEEVE DETAIL

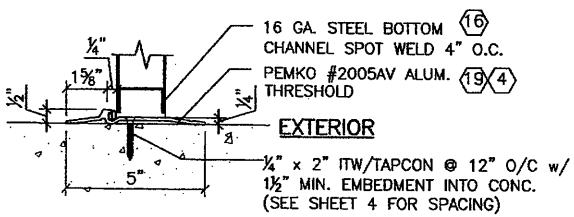

THRESHOLD INSTALLATION

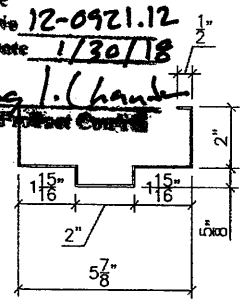

16 GAUGE FRAME PROFILE

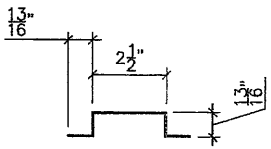

20 GA. STEEL HAT STIFFENER
SPOT WELD 6" O.C.
FULL HEIGHT OF DOOR.

PRODUCT REVISED
as complying with the Florida Building Code
Acceptance No 12-0921.12
Expiration Date 1/30/18
By Ishaq I. Chanda
Miami Dade Product Control

PRODUCT RENEWED
as complying with the Florida Building Code
Acceptance No 07-1017.09
Expiration Date JAN 30, 2013
By Ishaq I. Chanda
Miami Dade Product Control Division

PRODUCT REVISED
as complying with the Florida Building Code
Acceptance No 04-0823.05
Expiration Date JAN 30, 2008
By Ishaq I. Chanda
Miami Dade Product Control Division

FEB 10 1 2006

DAVID M. SCHONACHER, P.E.
FLORIDA REG. # 63131
(NOT VALID WITHOUT SEAL)

X = BILL OF MATERIALS REFERENCE, SEE SHEET 6 OF 8

16 GA. COMMERCIAL OUTSWING STEEL DOOR

4506 QUALITY LANE
TAMPA, FLORIDA 33634
(813) 885-1693
Quality Engineered Products Co., Inc.

REVISIONS
- -
- -
3-01-26-06

DRAWING NUMBER 16GACOSD-1

HURRICANE TEST APPROVAL
SERIES 16GACOSD
16 GAUGE COMMERCIAL
OUTSWING STEEL DOORS

SHEET 2 OF 8

DATE: 5-6-04

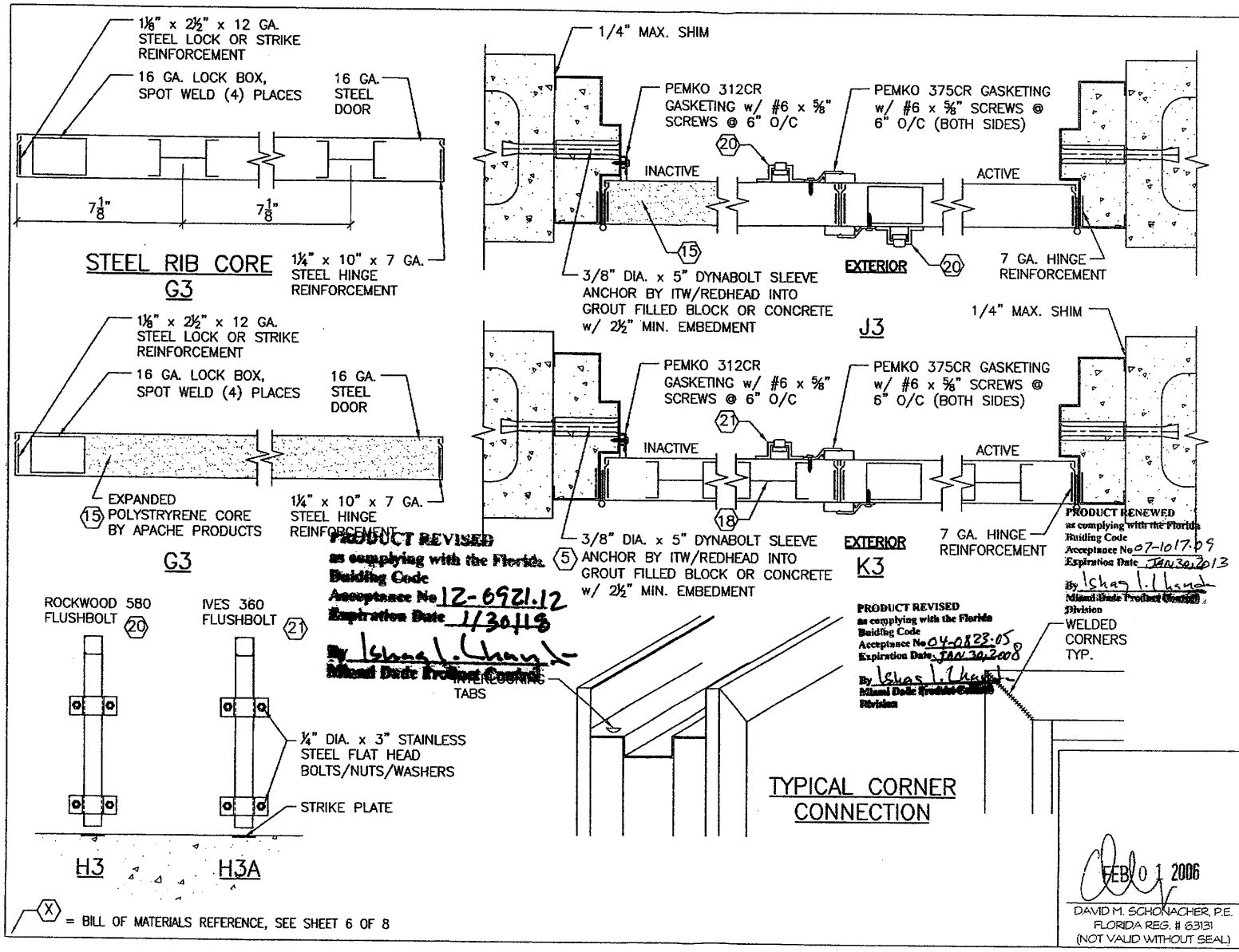

PRODUCT REVISED
as complying with the Florida Building Code
Acceptance No 12-0921.12
Expiration Date 1/30/18
By Ishag I. Chand
Miami Dade Product Control Division

PRODUCT RENEWED
as complying with the Florida Building Code
Acceptance No 07-1017.09
Expiration Date JAN 30, 2013
By Ishag I. Chand
Miami Dade Product Control Division

PRODUCT REVISED
as complying with the Florida Building Code
Acceptance No 04-0823.05
Expiration Date JAN 30, 2008
By Ishag I. Chand
Miami Dade Product Control Division

FEB 01 2006

DAVID M. SCHONACHER, P.E.
FLORIDA REG. # 63131
(NOT VALID WITHOUT SEAL)

DRAWING NUMBER 16GACOSD-1

16 GA. COMMERCIAL OUTSWING STEEL DOOR

4506 QUALITY LANE
TAMPA, FLORIDA 33634
(813) 885-1693

Quality Engineered Products Co., Inc.

REVISIONS
-
-
3 01-26-06

HURRICANE TEST APPROVAL
SERIES 16GACOSD
16 GAUGE COMMERCIAL
OUTSWING STEEL DOORS

SHEET 3 OF 8

DATE: 5-6-04

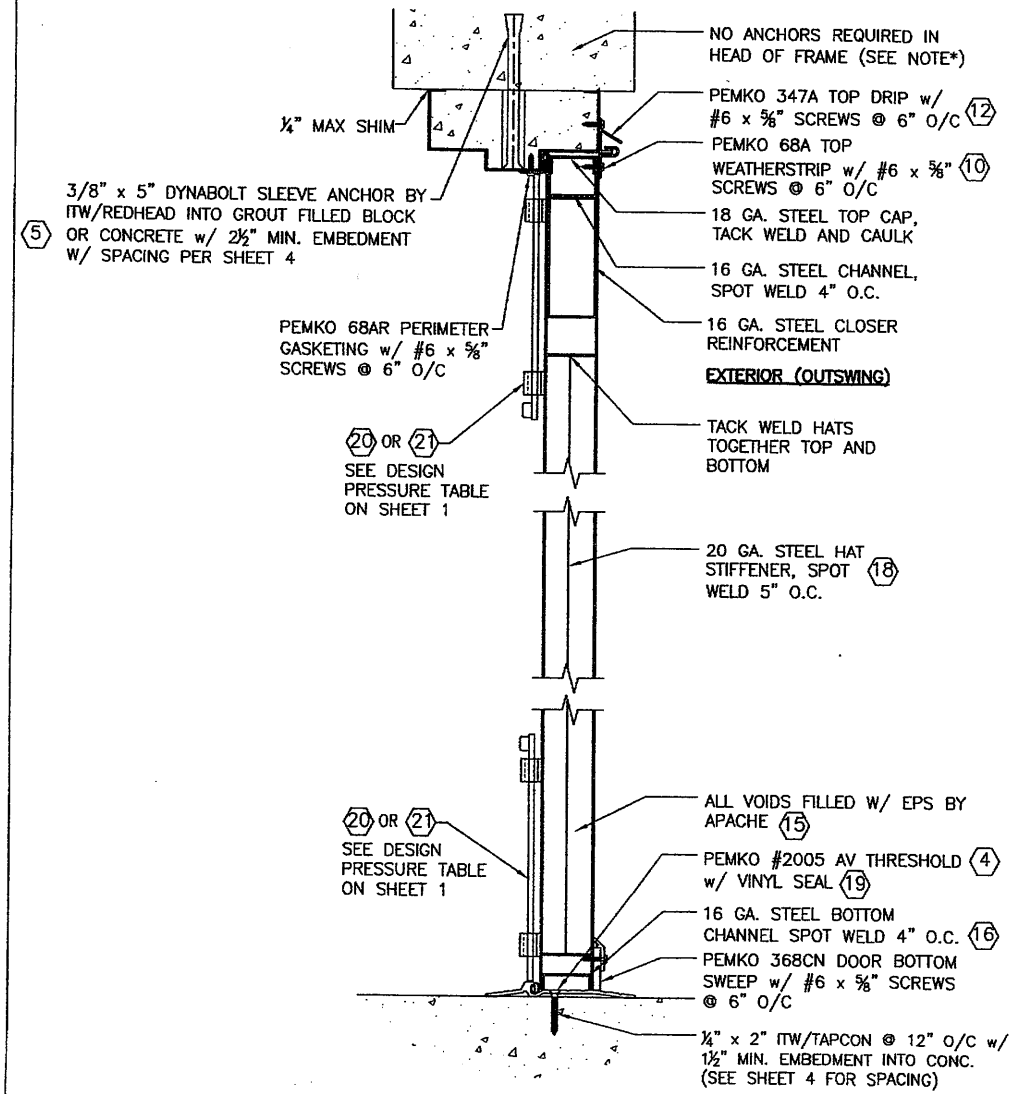

VERTICAL SECTION L–L

(X) = BILL OF MATERIALS REFERENCE, SEE SHEET 6 OF 8

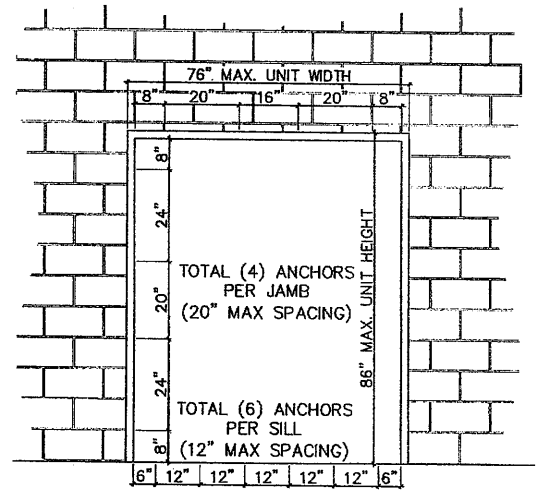

ANCHOR LOCATION INSTALLATION INTO NEW MASONRY (GROUT FILLED BLOCK)

PRODUCT RENEWED
as complying with the Florida Building Code
Acceptance No 07-1017.09
Expiration Date JAN 30, 2013
By Ishas I. Chanda
Miami-Dade Product Control Division

PRODUCT REVISED
as complying with the Florida Building Code
Acceptance No 04-0823.05
Expiration Date JAN 30, 2008
By Ishas I. Chanda
Miami Dade Product Control Division

PRODUCT REVISED
as complying with the Florida Building Code
Acceptance No 12-0921.12
Expiration Date 1/30/18
By Ishas I. Chanda
Miami Dade Product Control

FEB 01 2006

DAVID M. SCHONACHER, P.E.
FLORIDA REG. # 63131
(NOT VALID WITHOUT SEAL)

DRAWING NUMBER 16GACOSD-1

16 GA. COMMERCIAL OUTSWING STEEL DOOR

HURRICANE TEST APPROVAL
SERIES 16GACOSD
16 GAUGE COMMERCIAL
OUTSWING STEEL DOORS

REVISIONS
- -
3 01-26-06

4506 QUALITY LANE
TAMPA, FLORIDA 33634
(813) 885-1693
Quality Engineered Products Co., Inc.

SHEET 4 OF 8

DATE: 5-6-04

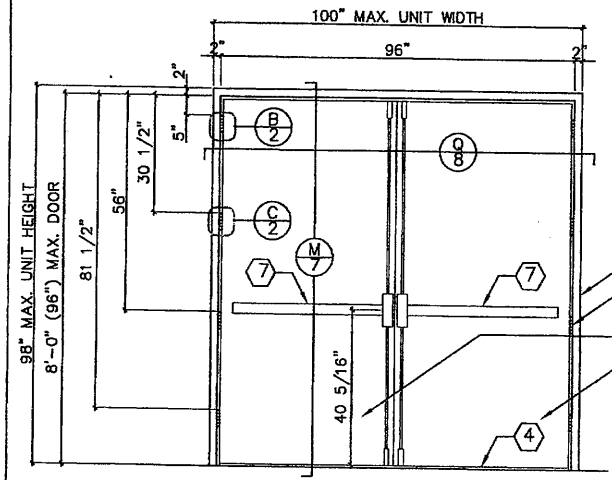

DOUBLE OUTSWING DOOR (INTERIOR VIEW)
w/ DORMA'S HCF 9400 VERTICAL ROD PANIC DEVICE

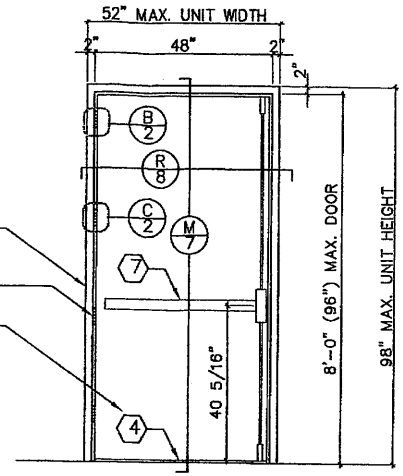

SINGLE OUTSWING DOOR (INTERIOR VIEW)
w/ DORMA'S HCF 9400 VERTICAL ROD PANIC DEVICE

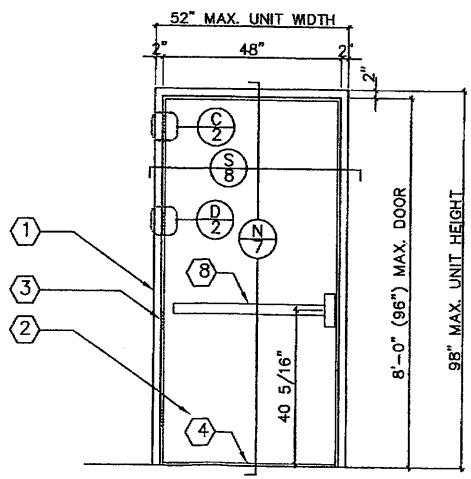

SINGLE OUTSWING DOOR (INTERIOR VIEW)
w/ DORMA'S HCF 9300 RIM EXIT DEVICE
w/ 416 STRIKE PLATE

DESIGN PRESSURE RATING		
	WHERE AIR & WATER INFILTRATION REQUIREMENT IS NEEDED	WHERE AIR & WATER INFILTRATION REQUIREMENT NOT IS NEEDED
POSITIVE	+80 PSF	+80 PSF
NEGATIVE	-80 PSF	-80 PSF

(X) = BILL OF MATERIALS REFERENCE, SEE SHEET 6 OF 8

PRODUCT REVISED
as complying with the Florida Building Code
Acceptance No 12-0921.12
Expiration Date 1/30/18
By Ishag I. Chang
Miami Dade Product Control

PRODUCT RENEWED
as complying with the Florida Building Code
Acceptance No 07-1017.09
Expiration Date JAN 30, 2013
By Ishag I. Chang
Miami Dade Product Control Division

PRODUCT REVISED
as complying with the Florida Building Code
Acceptance No 04-0423.05
Expiration Date JAN 30, 2008
By Ishag I. Chang
Miami Dade Product Control Division

FEB 0 1 2006

DAVID M. SCHONACHER, P.E.
FLORIDA REG. # 63131
(NOT VALID WITHOUT SEAL)

DRAWING NUMBER 16GACOSD-1

16 GA. COMMERCIAL OUTSWING STEEL DOOR

4506 QUALITY LANE
TAMPA, FLORIDA 33634
(813) 885-1693

Quality Engineered Products Co., Inc.

REVISIONS
- -
3 01-26-06

HURRICANE TEST APPROVAL
SERIES 16GACOSD
16 GAUGE COMMERCIAL
OUTSWING STEEL DOORS

SHEET 5 OF 8

DATE: 5-6-04

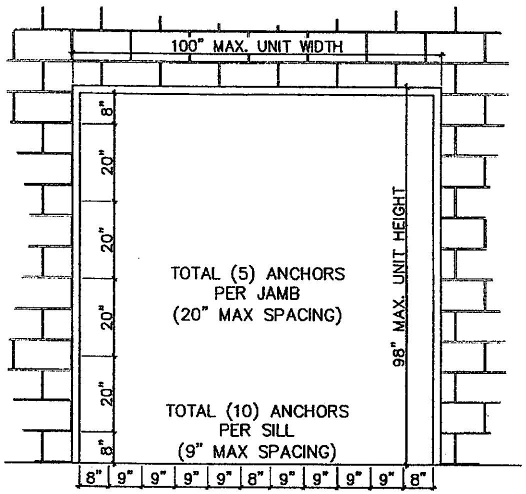

ANCHOR LOCATION INSTALLATION INTO NEW MASONRY
(GROUT FILLED BLOCK)

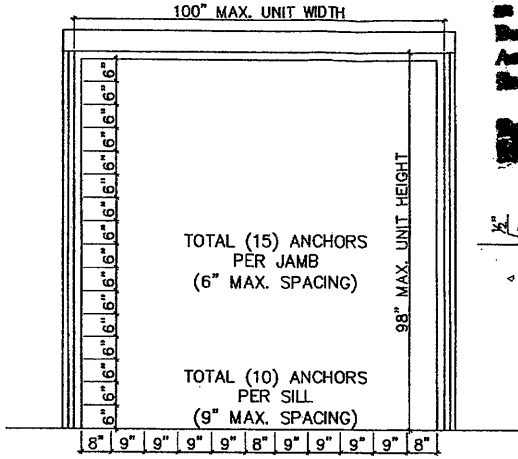

ANCHOR LOCATION INSTALLATION INTO WOOD STRUCTURE

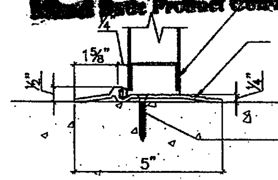

THRESHOLD INSTALLATION

PRODUCT REVISED
as complying with the Florida Building Code
Acceptance No 12-0921.12
Expiration Date 1/30/18
By [signature]
Miami Dade Product Control

PRODUCT RENEWED
as complying with the Florida Building Code
Acceptance No 07-1017.09
Expiration Date JAN 30 2013
By [signature]
Miami Dade Product Control Division

PRODUCT REVISED
as complying with the Florida Building Code
Acceptance No 04-0823.05
Expiration Date JAN 30, 2008
By [signature]
Miami Dade Product Control Division

ITEM #	QUANTITY	BILL OF MATERIALS
1	1	16 GA. MIN., 14 GA. MAX., STEEL HEAD/JAMB/SILL FRAME
2	2	16 GA. MIN, 14 GA. MAX., GLAZED STEEL DOOR – Fy MIN. 49,000 PSI
3	8	HAGAR HINGES BB1279 4½" x 4½" x 0.134" THICK
4	1	PEMKO 2005AV THRESHOLD
5	10	3/8" X 5" DYNABOLT SLEEVE ANCHOR BY ITW/REDHEAD w/ 3/4" EMT WELDED PIPE SLEEVE
6	30	½" x 6" WOOD LAG SCREWS w/ ¾" EMT PIPE SLEEVE
7	2	DORMA EXIT DEVICE HCF9400 VERTICAL ROD EXIT DEVICE w/ STRIKEPLATES TOP AND BOTTOM
8	2	DORMA EXIT DEVICE HCF9300 RIM EXIT DEVICE w/ STRIKE PLATES (416)
9	1	PDQ MORTISE LOCK MR117
10	1	PEMKO 68A DOOR TOP WEATHERSTRIP w/ #6 x ⅝" SCREWS

ITEM #	QUANTITY	BILL OF MATERIALS
11	AS REQ.	NATIONAL GAURD #130SA WEATHERSTRIP w/ #6 x ⅝" SCREWS
12	1	PEMKO 347A TOP DRIP
13	8	7 GA. STEEL DOOR HINGE REINFORCEMENT
14	8	7 GA. STEEL FRAME HINGE REINFORCEMENT
15	AS REQ.	EXPANDED POLYSTYRENE (EPS) BY APACHE w/ CURRENT NOA PRODUCTS
16	4	16 GA. STEEL TOP AND BOTTOM "U" CHANNEL
17	2	12 GA. STEEL 1.5" x 4.5" x FULL LENGTH LOCK REINFORCEMENT
18	AS REQ.	20 GA. STEEL HAT STIFFENERS
19	1	VINYL GASKETING (THRESHOLD)
20	1	ROCKWOOD 580 SURFACE BOLTS
21	1	IVES 360 SURFACE BOLTS
22	1	SCHLAGE MORTISE LOCK MODEL L9453P, SARGENT MORTISE LOCK MODEL 8225NL (70 PSF ONLY)

FEB 01 2006
[signature]
DAVID M. SCHOKACHER P.E.
FLORIDA REG. # 63131
(NOT VALID WITHOUT SEAL)

16 GA. COMMERCIAL OUTSWING STEEL DOOR

DRAWING NUMBER 16GACOSD-1

4506 QUALITY LANE
TAMPA, FLORIDA 33634
(813) 885-1693
Quality Engineered Products Co., Inc.

REVISIONS
- -
3 01-26-06

HURRICANE TEST APPROVAL
SERIES 16GACOSD
16 GAUGE COMMERCIAL
OUTSWING STEEL DOORS

SHEET 6 OF 8

DATE: 5-6-04

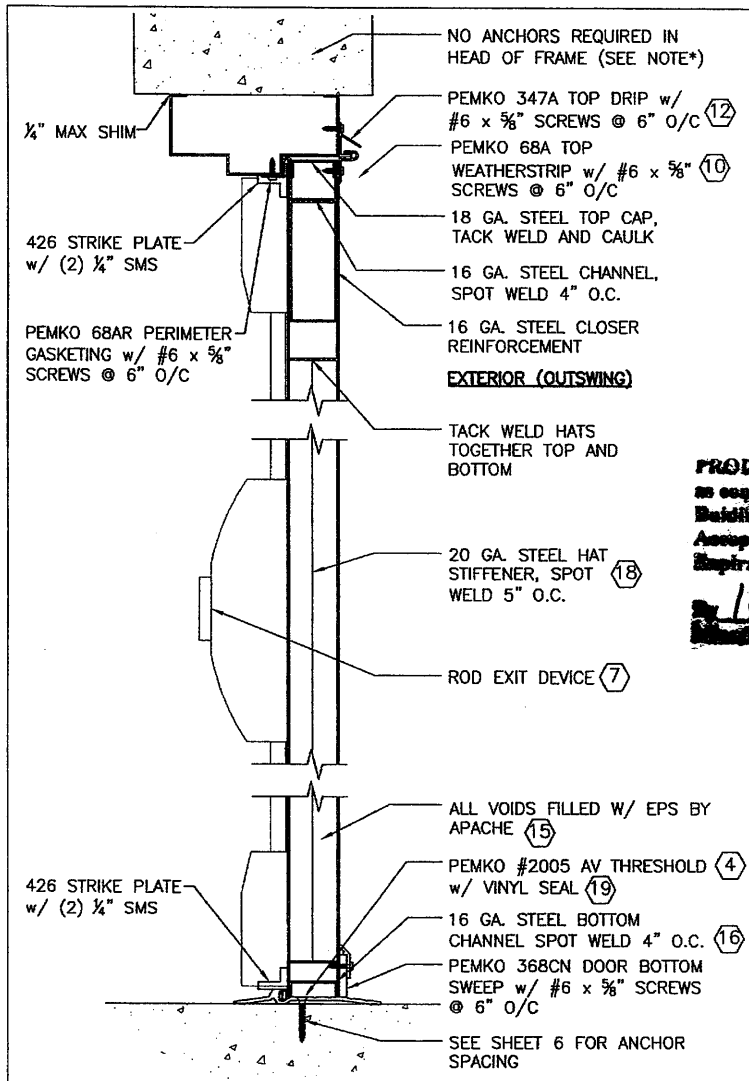

VERTICAL SECTION M–M

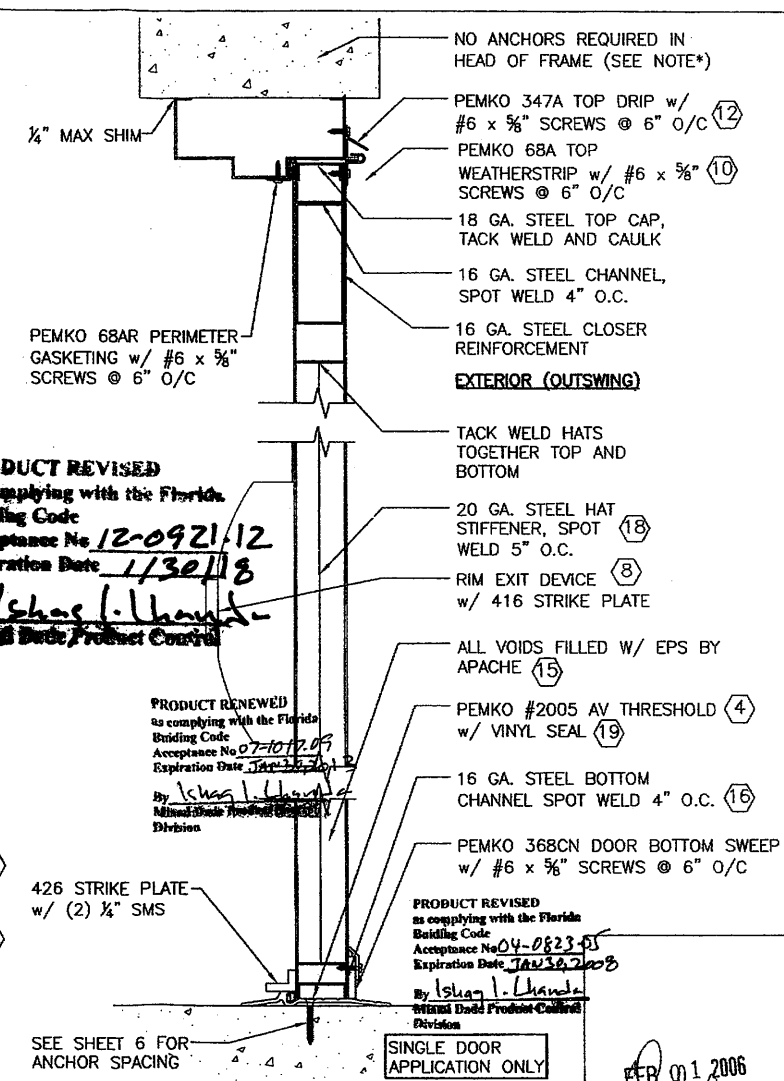

VERTICAL SECTION N–N

PRODUCT REVISED
as complying with the Florida Building Code
Acceptance No 12-0921.12
Expiration Date 1/30/08
By Ishaq I. Chanda
Miami-Dade Product Control

PRODUCT RENEWED
as complying with the Florida Building Code
Acceptance No 07-1012.09
Expiration Date Jan 30, 2012
By Ishaq I. Chanda
Miami-Dade Product Control Division

PRODUCT REVISED
as complying with the Florida Building Code
Acceptance No 04-0823.05
Expiration Date Jan 30, 2008
By Ishaq I. Chanda
Miami-Dade Product Control Division

FEB 01 2006

DAVID M. SCHONACHER P.E.
FLORIDA REG. # 63131
(NOT VALID WITHOUT SEAL)

(X) = BILL OF MATERIALS REFERENCE, SEE SHEET 6 OF 8

DRAWING NUMBER 16GACOSD-1

16 GA. COMMERCIAL OUTSWING STEEL DOOR

HURRICANE TEST APPROVAL
SERIES 16GACOSD
16 GAUGE COMMERCIAL
OUTSWING STEEL DOORS

REVISIONS
1 –
2 –
3 01-26-06

4506 QUALITY LANE
TAMPA, FLORIDA 33634
(813) 885-1693
Quality Engineered Products Co., Inc.

SHEET 7 OF 8

DATE: 5-6-04

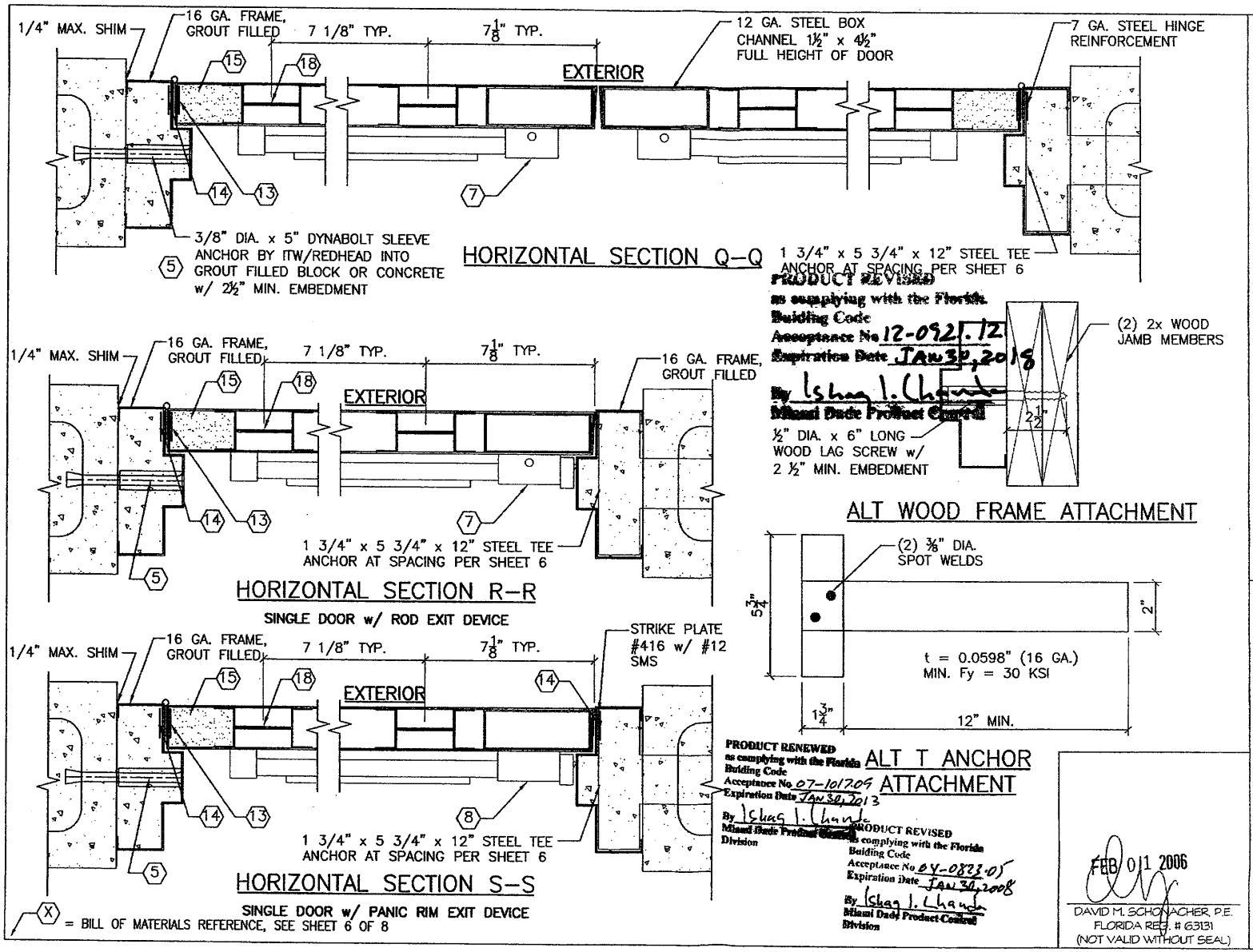

FEB 01 2006

DAVID M. SCHONACHER, P.E.
FLORIDA REG. # 63131
(NOT VALID WITHOUT SEAL)

DRAWING NUMBER 16GACOSD-1

16 GA. COMMERCIAL OUTSWING STEEL DOOR

REVISIONS
1 –
2 –
3 01-26-06

HURRICANE TEST APPROVAL
SERIES 16GACOSD
16 GAUGE COMMERCIAL
OUTSWING STEEL DOORS

SHEET 8 OF 8

DATE: 5-6-04

4506 QUALITY LANE
TAMPA, FLORIDA 33634
(813) 885-1693

Quality Engineered Products Co., Inc.