MIAMI-DADE COUNTY
DEPARTMENT OF PERMITTING, ENVIRONMENT, AND REGULATORY AFFAIRS (PERA)
BOARD AND CODE ADMINISTRATION DIVISION

MIAMI-DADE COUNTY
PRODUCT CONTROL SECTION
11805 SW 26 Street, Room 208
Miami, Florida 33175-2474
T (786) 315-2590 F (786) 315-2599
www.miamidade.gov/pera/

NOTICE OF ACCEPTANCE (NOA)

Curv-A-Tech Corporation
930 West 23rd Street,
Hialeah, Fl. 33010

SCOPE:
This NOA is being issued under the applicable rules and regulations governing the use of construction materials. The documentation submitted has been reviewed and accepted by Miami-Dade County PERA -Product Control Section to be used in Miami Dade County and other areas where allowed by the Authority Having Jurisdiction (AHJ).
This NOA shall not be valid after the expiration date stated below. The Miami-Dade County Product Control Section (In Miami Dade County) and/or the AHJ (in areas other than Miami Dade County) reserve the right to have this product or material tested for quality assurance purposes. If this product or material fails to perform in the accepted manner, the manufacturer will incur the expense of such testing and the AHJ may immediately revoke, modify, or suspend the use of such product or material within their jurisdiction. PERA reserves the right to revoke this acceptance, if it is determined by Miami-Dade County Product Control Section that this product or material fails to meet the requirements of the applicable building code.
This product is approved as described herein, and has been designed to comply with the Florida Building Code, including the High Velocity Hurricane Zone.

DESCRIPTION: Series 715 Aluminum Outswing French Doors w/wo Sidelites-N.I.

APPROVAL DOCUMENT: Drawing No. **W12-43 Rev A**, titled "Series Alum French Door w/ sidelites (N.I.)", sheets 1 through 15 of 15, prepared by AL-Farooq Corporation, dated 08/09/12 and last revised on MAY 22, 2013, signed and sealed by Javad Ahmad, P.E., bearing the Miami-Dade County Product Control Approval stamp with the Notice of Acceptance number and approval date by the Miami-Dade County Product Control Section.

MISSILE IMPACT RATING: None. Approved Hurricane Protection Devices per FBC required.

Limitations:
1. Where Water Infiltration is needed, the max. Exterior (Positive Design Pressure) to be limited =+65.0 PSF
2. When doors are mulled with sidelite (reinforcing / non-reinf. mullion or door mullion, lower Design Pressure shall apply to entire assembly.
3. Except **Single** sidelite in sheet 2, the sidelites are integral part of the door system, as shown in sheet 4.
4. Curv-A Tech SHW is under separate approval, when used lower DP of door, SHW or sidelite shall control.
5. Glass lite wider than 36" must be supported with approved setting blocks per FBC requirements.

LABELING: Each unit shall bear a permanent label with the manufacturer's name or logo, city, state and series and following statement: "Miami-Dade County Product Control Approved", noted herein.

RENEWAL of this NOA shall be considered after a renewal application has been filed and there has been no change in the applicable building code negatively affecting the performance of this product.

TERMINATION of this NOA will occur after the expiration date or if there has been a revision or change in the materials, use, and/or manufacture of the product or process. Misuse of this NOA as an endorsement of any product, for sales, advertising or any other purposes shall automatically terminate this NOA. Failure to comply with any section of this NOA shall be cause for termination and removal of NOA.

ADVERTISEMENT: The NOA number preceded by the words Miami-Dade County, Florida, and followed by the expiration date may be displayed in advertising literature. If any portion of the NOA is displayed, then it shall be done in its entirety.

INSPECTION: A copy of this entire NOA shall be provided to the user by the manufacturer or its distributors and shall be available for inspection at the job site at the request of the Building Official.
This NOA consists of this page 1 and evidence pages E-1, as well as approval document mentioned above.
The submitted documentation was reviewed by **Ishaq I. Chanda, P.E.**

MIAMI-DADE COUNTY APPROVED
5/23/13

NOTICE OF ACCEPTANCE: EVIDENCE SUBMITTED

A. DRAWINGS

1. Manufacturer's die drawings and sections
2. Drawing No. **W12-43 Rev A**, titled "Series Alum French Door w/ sidelites (N.I.)", sheets 1 through 15 of 15, prepared by AL-Farooq Corporation, dated 08/09/12 and last revised on MAY 22, 2013, signed and sealed by Javad Ahmad, P.E.

B. TESTS

1. Test reports on: 1) Air Infiltration Test, per FBC, TAS 202-94
   2) Uniform Static Air Pressure Test, Loading per FBC TAS 202-94
   3) Water Resistance Test, per FBC, TAS 202-94
   4) Forced Entry Test, per FBC 2411 3.2.1, TAS 202-94

along with marked-up drawings and installation diagram of Non-Impact outswing aluminum glass door w/ Sidelite (OXXOO), prepared by Fenestration Testing Lab., Inc., part of the Test Report No. **FTL-6749**, dated 03/1212, signed and sealed by Marlin D. Brinston, P. E.

C. CALCULATIONS

1. Anchor verification calculations and structural analysis, complying with FBC-2010, prepared by Al Farooq Corporation, dated 09/10/12 and revised on May 20, 2013, signed and sealed by Javad Ahmad, P.E.
2. Glazing complies w/ ASTME-1300-02 & -04

D. QUALITY ASSURANCE

1. Miami Dade Department of Permitting, Environment, and Regulatory Affairs (PERA).

E. MATERIAL CERTIFICATIONS

1. None

F. STATEMENTS

1. Statement letter of conformance and letter of no financial interest, prepared by Al Farooq Corporation, dated 07/30/12, signed and sealed by Javad Ahmad, P.E.
2. Lab compliance as part of the above referenced test report.

G. OTHER

1. Test proposal, dated 10/26/11 approved by PERA.

Ishaq I. Chanda

Ishaq I. Chanda, P.E.
Product Control Examiner
NOA No 12-0921.14
Expiration Date: May 30, 2018
Approval Date: May 30, 2013

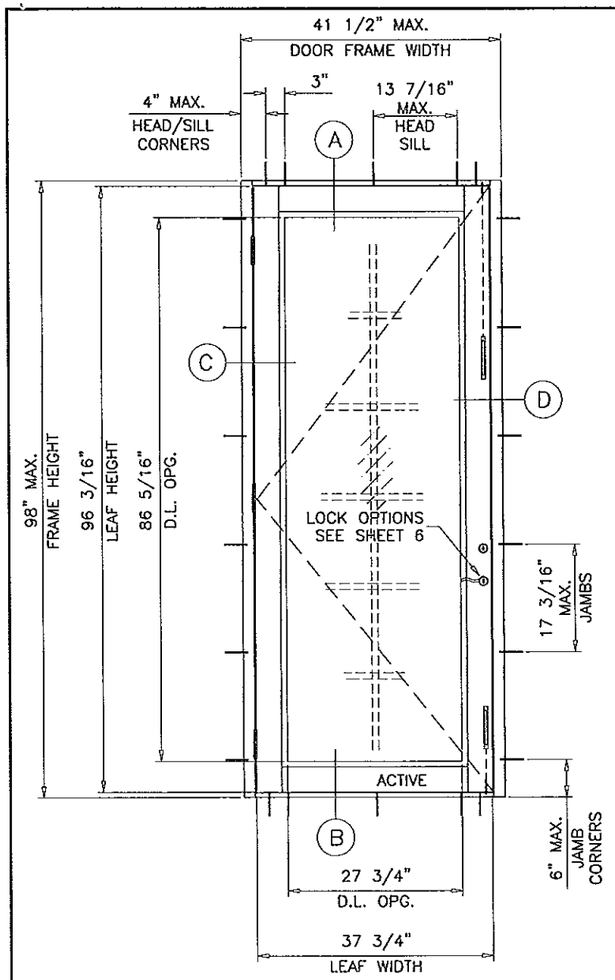

TYPICAL ELEVATION

(X)

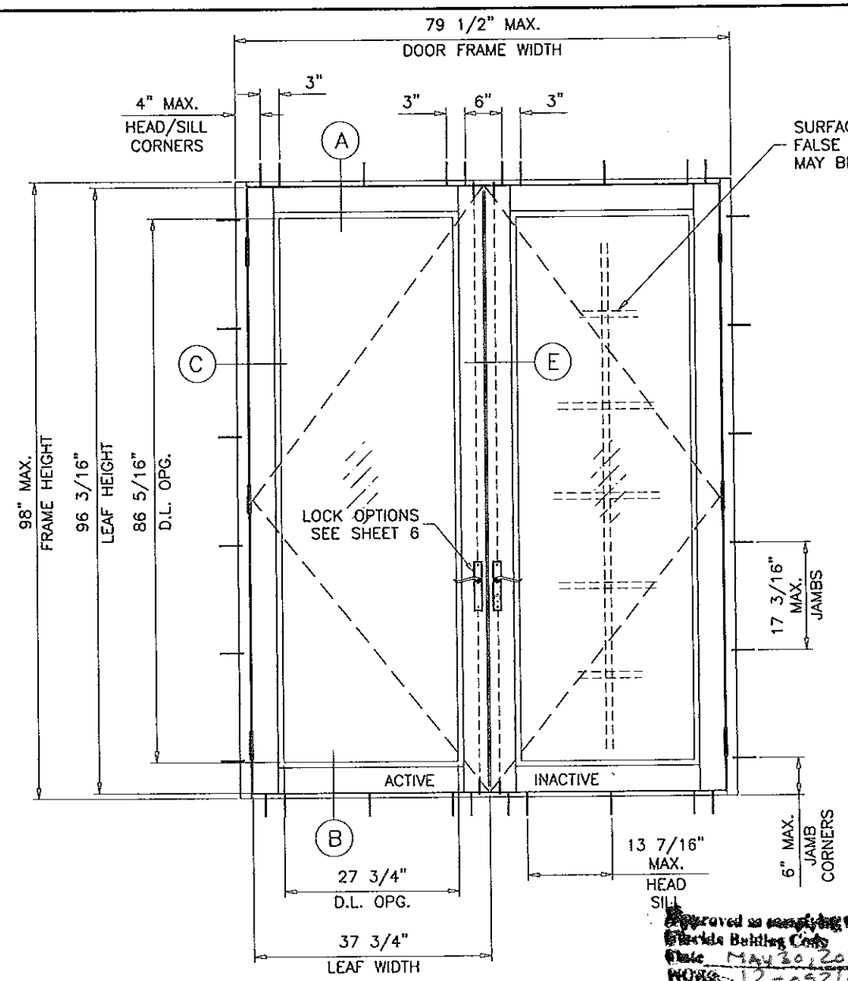

TYPICAL ELEVATION

(XX)

GLASS D.L.O. DIMS.

D.L.O. HEIGHT = FRAME HEIGHT – 11.687"
D.L.O. WIDTH (X DOORS) = FRAME WIDTH – 13.750"
D.L.O. WIDTH (XX DOORS) = (FRAME WIDTH – 24")/2

DOORS/SIDELITES NOT RATED FOR IMPACT.
INSTALLATION OF THIS PRODUCT IN THE HVHZ AREA REQUIRES THE USE OF APPROVED SHUTTERS OR EXTERNAL PROTECTION DEVICES COMPLYING WITH HVHZ REQUIREMENTS.
INSTALLATION OF THIS SYSTEM OUTSIDE THE HVHZ AREA SHALL MEET THE APPLICABLE REQUIREMENTS FOR WIND BORNE DEBRIS PROTECTION.

SERIES 715 ALUMINUM FRENCH DOOR W/ SIDELITES

APPROVAL APPLIES TO SINGLE (X) AND DOUBLE (XX) LEAF DOORS WITH OR WITHOUT SIDELITES.
SIDE LITES CAN BE ON ONE OR BOTH SIDES OF DOOR.
SEE TABLES 1 & 2 FOR SINGLE OR DOUBLE LEAF DOORS CAPACITIES ON SHEET 1.
SEE TABLE 3 FOR SINGLE STATIONARY PANEL CAPACITY ON SHEET 3.
SEE TABLE 4 FOR SIDELITE, SIDELITE MULLION AND DOOR MULLION CAPACITY ON SHEET 4.
THE LOWEST VALUE FROM DOOR CAPACITY TABLES OR MULLION CAPACITY TABLE WILL APPLY TO ENTIRE SYSTEM.

THIS PRODUCT HAS BEEN DESIGNED AND TESTED TO COMPLY WITH THE REQUIREMENTS OF THE CURRENT FLORIDA BUILDING CODE INCLUDING HIGH VELOCITY HURRICANE ZONE (HVHZ).

1BY OR 2BY WOOD BUCKS BY OTHERS, MUST BE ANCHORED PROPERLY TO TRANSFER LOADS TO THE STRUCTURE.

ANCHORS SHALL BE AS LISTED, SPACED AS SHOWN ON DETAILS, ANCHORS EMBEDMENT TO BASE MATERIAL SHALL BE BEYOND WALL DRESSING OR STUCCO.

ANCHORING OR LOADING CONDITIONS NOT SHOWN IN THESE DETAILS ARE NOT PART OF THIS APPROVAL.

A LOAD DURATION INCREASE IS USED IN DESIGN OF ANCHORS INTO WOOD ONLY.

MATERIALS INCLUDING BUT NOT LIMITED TO STEEL/METAL SCREWS, THAT COME INTO CONTACT WITH OTHER DISSIMILAR MATERIALS SHALL MEET THE REQUIREMENTS OF CURRENT FLORIDA BLDG. CODE SECTION 2003.8.4.

Approved as complying with Florida Building Code
Date MAY 30, 2013
NOA No. 12-0321.19
Miami-Dade Product Control
By Shaq L. Chandler

DOOR OPTIONS

TABLE 1

DOORS LOAD CAPACITY – PSF SINGLE (X)				
DOOR DIMS.			1/4" TEMP. GLASS	
FRAME WIDTH	LEAF WIDTH	FRAME HEIGHT	EXT.(+)	INT.(–)
31-1/2"	27-3/4"	82"	107.6	115.8
37-1/2"	33-3/4"		88.7	95.5
41-1/2"	37-3/4"		79.6	85.7
31-1/2"	27-3/4"	84"	102.4	110.3
37-1/2"	33-3/4"		84.4	90.9
41-1/2"	37-3/4"		75.8	81.7
31-1/2"	27-3/4"	90"	95.6	103.0
37-1/2"	33-3/4"		78.8	84.9
41-1/2"	37-3/4"		70.8	76.2
31-1/2"	27-3/4"	96"	89.7	96.5
37-1/2"	33-3/4"		73.9	79.6
41-1/2"	37-3/4"		66.4	71.4
31-1/2"	27-3/4"	98"	87.8	94.6
37-1/2"	33-3/4"		72.4	77.9
41-1/2"	37-3/4"		65.0	70.0

EXT.(+) LOADS SHOWN IN THESE CHARTS ARE FOR INSTALLATIONS WHERE WATER INFILTRATION RESISTANCE IS NOT REQUIRED. LIMIT EXT.(+) LOADS TO 65 PSF FOR INSTALLATIONS WHERE WATER INFILTRATION RESISTANCE IS REQUIRED.

NOTE:
VERIFY COMPLIANCE WITH EGRESS LIMITATIONS WHERE REQUIRED.

TABLE 2

DOORS LOAD CAPACITY – PSF DOUBLE (XX)				
DOOR DIMS.			1/4" TEMP. GLASS	
FRAME WIDTH	LEAF WIDTH	FRAME HEIGHT	EXT.(+)	INT.(–)
59-3/4"	28-7/8"	82"	107.6	115.8
71-3/4"	33-7/8"		88.7	95.5
79-1/2"	37-3/4"		79.6	85.7
59-3/4"	28-7/8"	84"	102.4	110.3
71-3/4"	33-7/8"		84.4	90.9
79-1/2"	37-3/4"		75.8	81.7
59-3/4"	28-7/8"	90"	95.6	103.0
71-3/4"	33-7/8"		78.8	84.9
79-1/2"	37-3/4"		70.8	76.2
59-3/4"	28-7/8"	96"	89.7	96.5
71-3/4"	33-7/8"		73.9	79.6
79-1/2"	37-3/4"		66.4	71.4
59-3/4"	28-7/8"	98"	87.8	94.6
71-3/4"	33-7/8"		72.4	77.9
79-1/2"	37-3/4"		65.0	70.0

NOTE:
GLASS CAPACITIES ON THIS SHEET ARE BASED ON ASTM E1300-04 (3 SEC. GUSTS) AND FLORIDA BUILDING COMMISSION DECLARATORY STATEMENT DCA05-DEC-219

MONOLITHIC GLASS
NON IMPACT

THIS NOA IS NOT VALID WITHOUT CORPORATE SEAL OF CURV-A-TECH CORPORATION AND A LABEL AFFIXED.

NOTE:
FLUSH BOLTS AND LOCKS MUST BE ENGAGED TO HEAD AND SILL DURING PERIODS OF HURRICANE WARNING.

Engr: JAVAD AHMAD
CIVIL
FLA. PE # 70592
C.A.N. 3538
MAY 22 2013

AL-FAROOQ CORPORATION
ENGINEERS & PRODUCT DEVELOPMENT
1235 S.W. 87 AVE
MIAMI, FLORIDA 33174
TEL (305) 264-8100 FAX. (305) 262-6978
COMP-ANL\W12-43CTC

SERIES 715 ALUM FRENCH DOOR W/ SIDELITES (N.L.)
CURV-A-TECH CORPORATION
930 W. 23rd STREET
HIALEAH, FL 33010
TEL. (305) 888-9631 FAX. (305) 888-9969

revisions:			
no	date	by	description
A	03.06.13	RER	REV. PER COMMENTS

date: 08-09-12
scale: 1/2"=1'-0"
dr. by: HAMID
chk. by:

drawing no.
W12-43

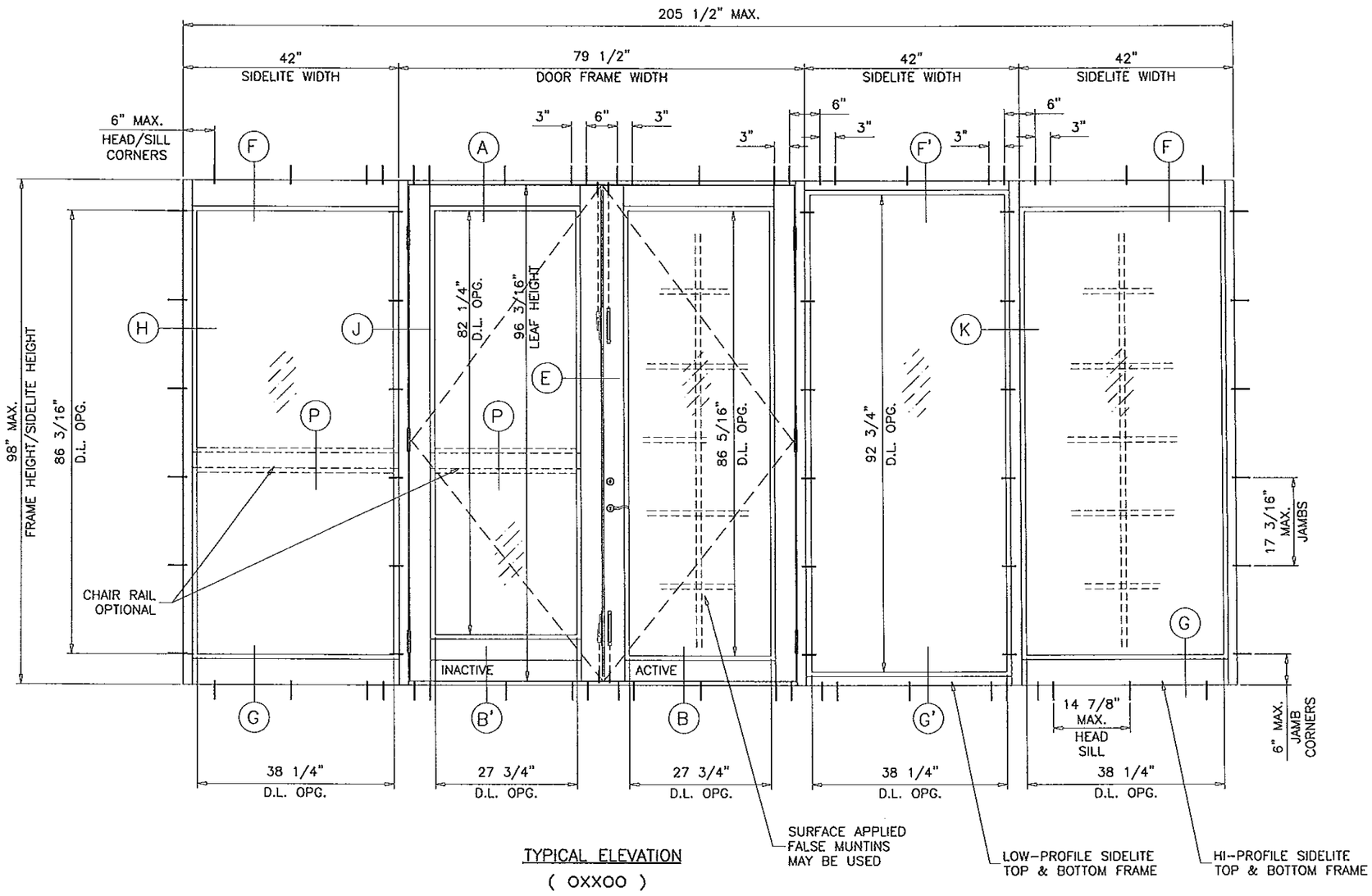

TYPICAL ELEVATION

(OXXOO)

DOORS WITH SIDELITE OPTIONS

NOTES:
1. DOORS ARE VIEWED FROM OUTSIDE.
2. FRENCH DOORS WITHOUT INSECT SCREENS.

GLASS D.L.O. DIMS.

D.L.O. HEIGHT (HIGH PROFILE SIDELITE) = SIDELITE HEIGHT – 11.750"
D.L.O. HEIGHT (LOW PROFILE SIDELITE) = SIDELITE HEIGHT – 5.250"
D.L.O. WIDTH (SIDELITE) = SIDELITE WIDTH – 4.250"

D.L.O. HEIGHT (DOOR) = FRAME HEIGHT – 11.687"
D.L.O. WIDTH (X DOORS) = FRAME WIDTH – 13.750"
D.L.O. WIDTH (XX DOORS) = (FRAME WIDTH – 24")/2

Engr: JAVAD AHMAD
CIVIL
FLA. PE # 70592
C.A.N. 3538

MAY 22 2013

Approved as complying with the Florida Building Code
Date 5/30/13
NOA# 12-0921.14
Miami-Dade Building Official
By Ichang L. Chang

AL-FAROOQ CORPORATION
ENGINEERS & PRODUCT DEVELOPMENT
1235 S.W. 87 AVE
MIAMI, FLORIDA 33174
TEL. (305) 264-3100 FAX. (305) 262-6978
COMP-ANL\W12-43CTC

SERIES 715 ALUM FRENCH DOOR W/ SIDELITES (N.I.)

CURV-A-TECH CORPORATION
930 W. 23rd STREET
HIALEAH, FL 33010
TEL. (305) 888-9631 FAX. (305) 888-9969

revisions:

no	date	by	description
A	03.06.13		REV. PER RER COMMENTS

date: 08-09-12
scale: 1/2"=1'-0"
dr. by: HAMID
chk. by:

drawing no.
W12-43

sheet 2 of 15

TABLE 3

DESIGN LOAD CAPACITY - PSF			
FRAME WIDTH INCHES	FRAME HEIGHT INCHES	STATIONARY PANEL (O) EXT.(+)	STATIONARY PANEL (O) INT.(-)
24	82	65.0	112.8
30		65.0	94.2
36		65.0	81.7
42		65.0	70.0
43 1/2		62.8	67.6
45		60.7	65.3
48		56.9	61.3
24	84	65.0	112.3
30		65.0	93.7
36		65.0	81.7
42		65.0	70.0
43 1/2		62.8	67.6
45		60.7	65.3
48		56.9	61.3
24	90	65.0	111.1
30		65.0	92.4
36		65.0	80.2
42		65.0	70.0
43 1/2		62.8	67.6
45		60.7	65.3
24	96	65.0	110.0
30		65.0	91.3
36		65.0	79.0
42		65.0	70.0
43 1/2		62.8	67.6
24	98	65.0	109.7
30		65.0	90.9
36		65.0	78.6
42		65.0	70.0
43 1/2		62.8	67.6

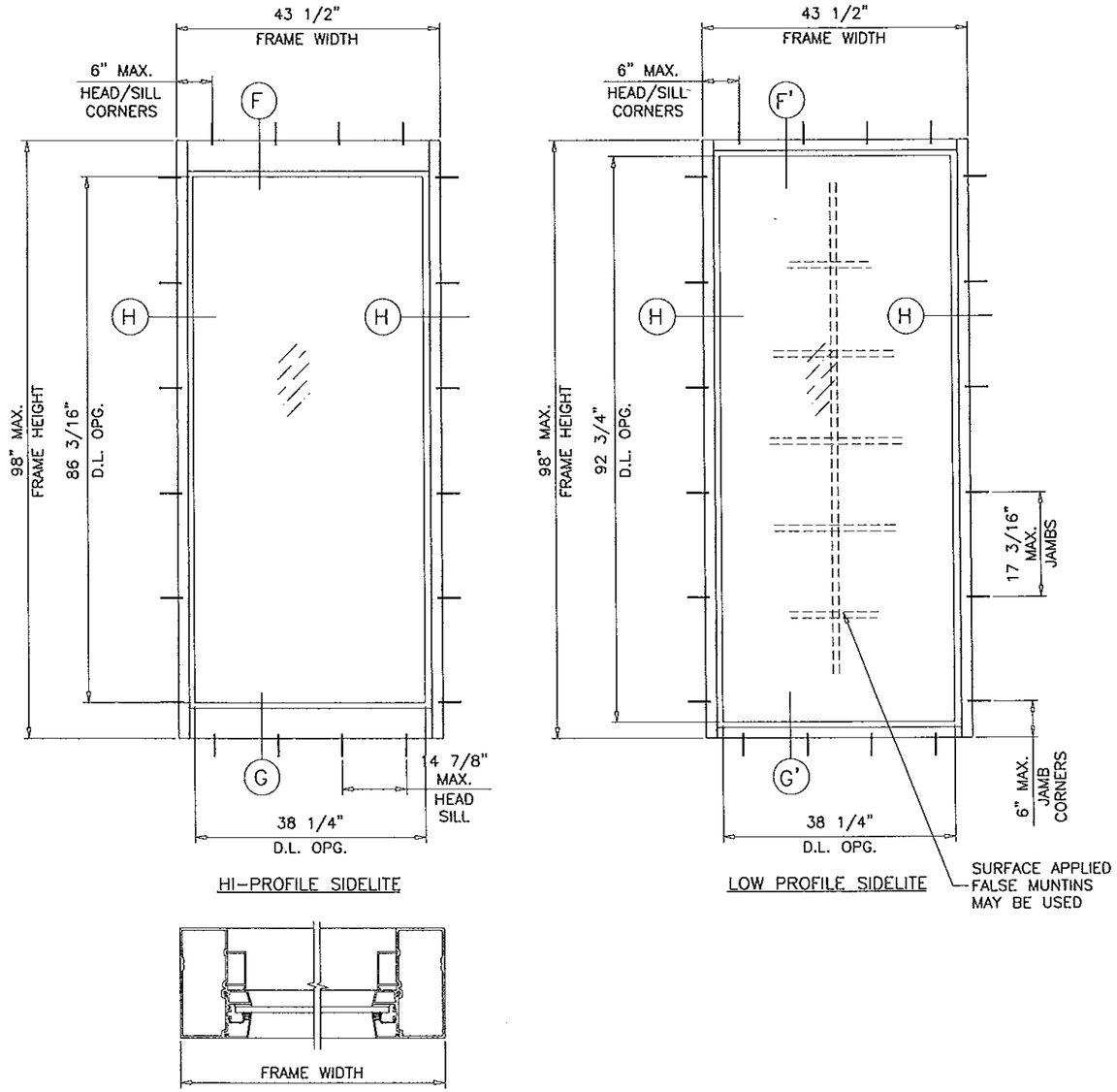

TYPICAL ELEVATIONS

(O)

Approved as complying with the Florida Building Code
Date 5/30/13
NOA# 12-0921.14
Miami Dade Product Control
By

NOTE:
GLASS CAPACITIES ON THIS SHEET ARE BASED ON ASTM E1300-04 (3 SEC. GUSTS).

Engr: JAVAD AHMAD
CIVIL
FLA. PE # 70592
C.A.N. 3538

MAY 22 2013

AL-FAROOQ CORPORATION
ENGINEERS & PRODUCT DEVELOPMENT
1235 S.W. 87 AVE
MIAMI, FLORIDA 33174
TEL. (305) 264-8100 FAX. (305) 262-6978

COMP-ANL\W12-43CTC

SERIES 715 ALUM FRENCH DOOR W/ SIDELITES (N.I.)

CURV-A-TECH CORPORATION
930 W. 23rd STREET
HIALEAH, FL 33010
TEL. (305) 888-9631 FAX. (305) 888-9969

revisions:			
no	date	by	description
A	03.06.13		REV. PER RER COMMENTS

date: 08-09-12
scale: 1/2"=1'-0"
dr. by: HAMID
chk. by:

drawing no.
W12-43

TABLE 4

MULLION & SIDELITE DESIGN LOAD CAPACITY – PSF								
SIDELITE FRAME HEIGHT INCHES	DOOR FRAME WIDTH INCHES	SIDELITE FRAME WIDTH INCHES	SIDELITE TO SIDELITE				SIDELITE TO DOOR	
			W/O REINF.		WITH REINF.		W/O REINF.	
			EXT.(+)	INT.(−)	EXT.(+)	INT.(−)	EXT.(+)	INT.(−)
82	41 1/2 (X) 79 1/2 (XX)	24	65.0	112.8	–	–	65.0	112.8
		30	65.0	94.2	–	–	65.0	94.2
		36	65.0	81.7	–	–	65.0	81.7
		42	65.0	70.0	–	–	65.0	70.0
		45	60.7	65.3	–	–	60.7	65.3
		48	56.9	61.3	–	–	56.9	61.3
84	41 1/2 (X) 79 1/2 (XX)	24	65.0	112.3	–	–	65.0	112.3
		30	65.0	93.7	–	–	65.0	93.7
		36	65.0	81.7	–	–	65.0	81.7
		42	65.0	70.0	–	–	65.0	70.0
		45	60.7	65.3	–	–	60.7	65.3
		48	56.9	61.3	–	–	56.9	61.3
90	41 1/2 (X) 79 1/2 (XX)	24	65.0	111.1	–	–	65.0	111.1
		30	65.0	92.4	–	–	65.0	92.4
		36	65.0	80.2	–	–	65.0	80.2
		42	65.0	70.0	–	–	65.0	70.0
		45	60.7	65.3	–	–	60.7	65.3
96	41 1/2 (X) 79 1/2 (XX)	24	65.0	98.0	65.0	110.0	65.0	87.9
		30	65.0	79.5	65.0	91.3	65.0	80.5
		36	65.0	67.5	65.0	79.0	65.0	74.3
		42	59.1	59.1	65.0	70.0	59.1	69.0
98	41 1/2 (X) 79 1/2 (XX)	24	65.0	92.1	65.0	109.7	65.0	82.6
		30	65.0	74.7	65.0	90.9	65.0	75.7
		36	63.3	63.3	65.0	78.6	63.3	69.8
		42	55.4	55.4	65.0	70.0	55.4	64.8

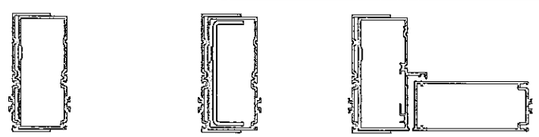

Ix IN^4	Sx IN^3
3.3117	1.4993

SIDELITE TO SIDELITE W/O REINFORCING

Ix IN^4	Sx IN^3
4.5977	2.0814

SIDELITE TO SIDELITE WITH REINFORCING

Ix IN^4	Sx IN^3
4.1453	1.8766

SIDELITE TO DOOR W/O REINFORCING

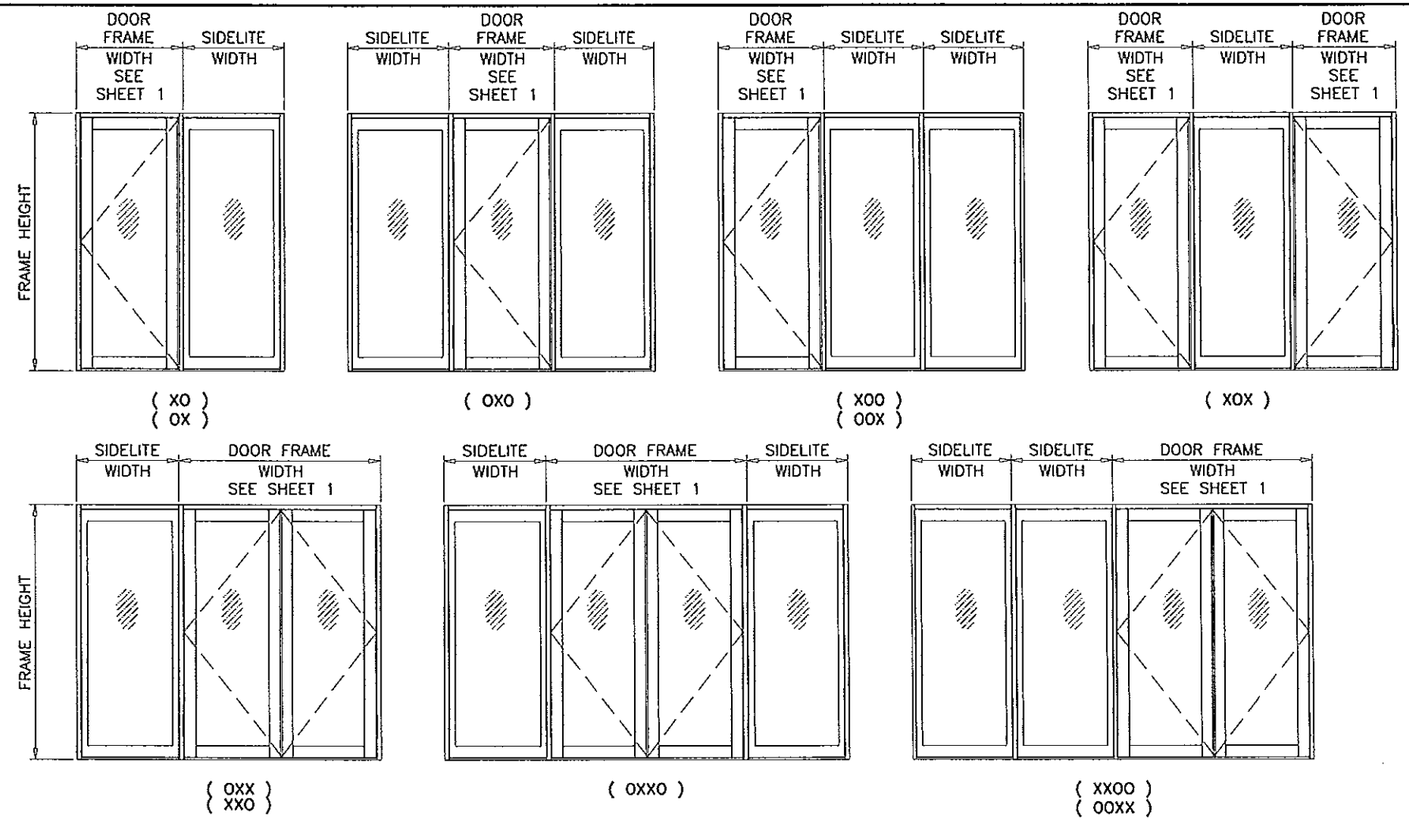

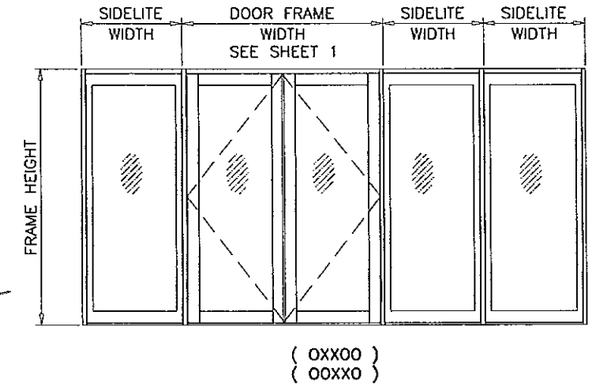

INSTRUCTIONS:

USE CHARTS AS FOLLOWS.

1. SELECT SINGLE OR DOUBLE DOORS CAPACITY FROM TABLES 1 OR 2 ON SHEET 1.
2. SELECT LOWER OF SIDELITE, SIDELITE MULLION AND DOOR MULLION CAPACITY FROM TABLE 4.
3. LOWER VALUES FROM STEPS 1 OR 2 WILL APPLY TO ENTIRE SYSTEM.

Approved as complying with the Florida Building Code
Date 5/30/13
NOA# 12-0921.14
Miami Dade Product Control
By Ishwar L. Chand

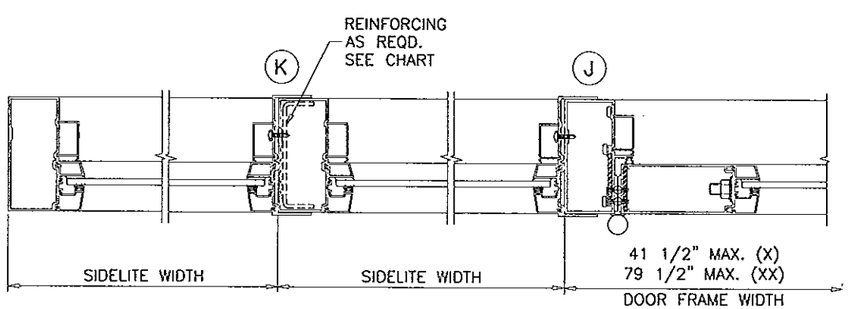

SIDELITE TO SIDELITE WITH DOOR

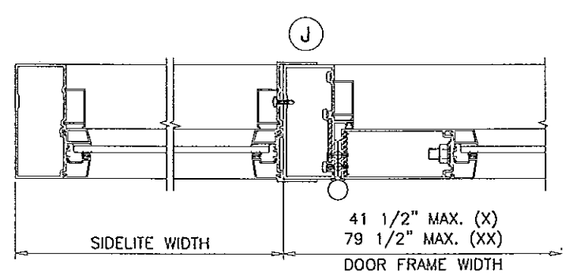

SIDELITE TO DOOR

NOTE:
GLASS CAPACITIES ON THIS SHEET ARE BASED ON ASTM E1300-04 (3 SEC. GUSTS) AND FLORIDA BUILDING COMMISSION DECLARATORY STATEMENT DCA05-DEC-219

Engr: JAVAD AHMAD
CIVIL
FLA. PE # 70592
C.A.N. 3538

MAY 22 2013

AL-FAROOQ CORPORATION
ENGINEERS & PRODUCT DEVELOPMENT
1235 S.W. 87 AVE
MIAMI, FLORIDA 33174
TEL. (305) 264-8100 FAX. (305) 262-6978

COMP-ANL\W12-43CTC

SERIES 715 ALUM FRENCH DOOR W/ SIDELITES (N.I.)

CURV-A-TECH CORPORATION
930 W. 23rd STREET
HIALEAH, FL 33010
TEL. (305) 888-9631 FAX. (305) 888-9969

revisions:			
no	date	by	description
A	03.06.13		REV. PER RER COMMENTS

date: 08-09-12
scale: 1/2"=1'-0"
dr. by: HAMID
chk. by:

drawing no. W12-43

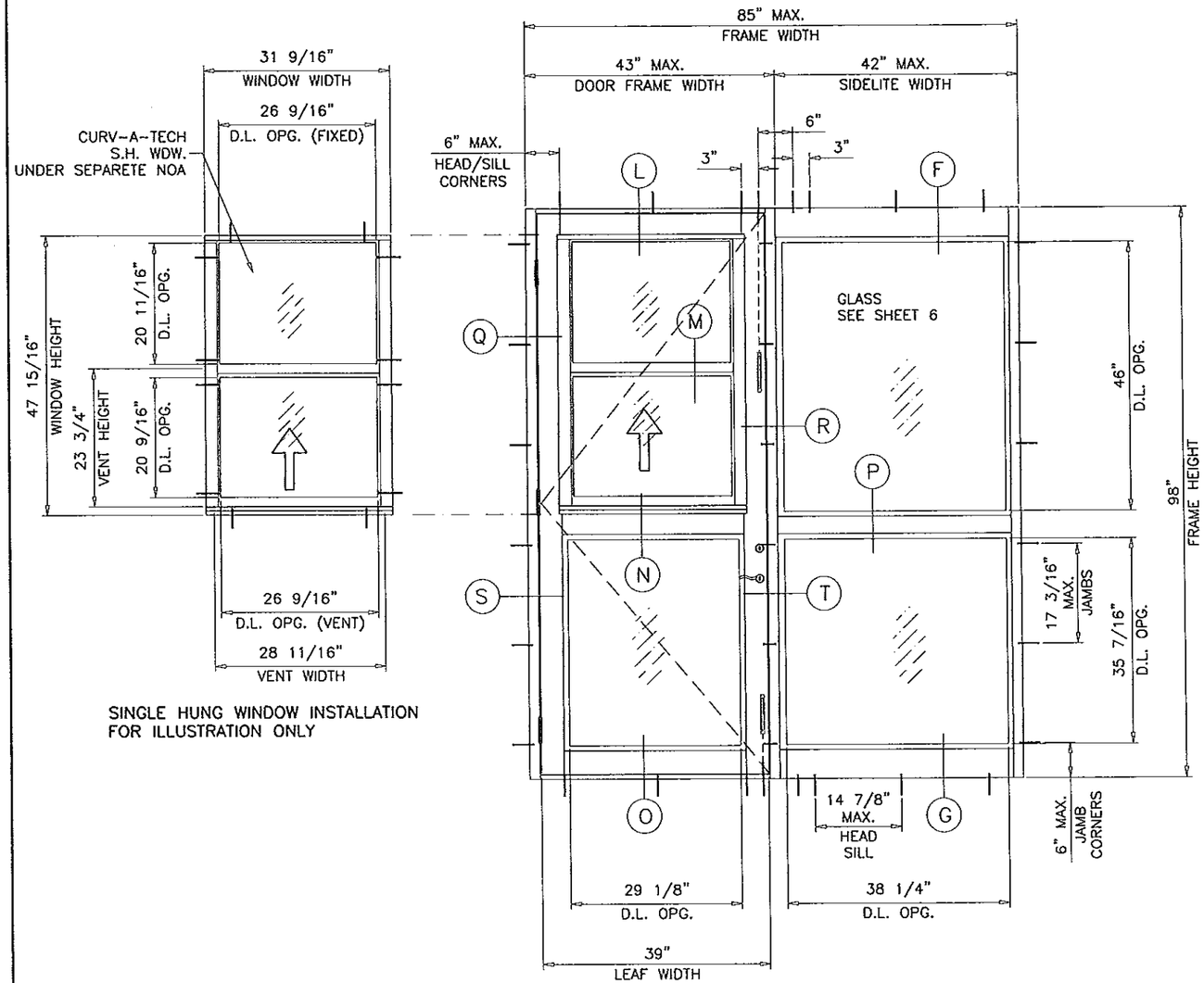

SINGLE HUNG WINDOW INSTALLATION
FOR ILLUSTRATION ONLY

TYPICAL ELEVATION
(XO)

SINGLE LEAF DOOR WITH SERIES 300 SINGLE HUNG WDW. INSERT WITH 42" MAX. WIDE SIDELITE

NOTE:
DOORS WITH S.H. WINDOW INSERT (UNDER SEPARATE NOA)
MAY BE INSTALLED WITH OR WITHOUT SIDELITES.
SEE SHEET 3 FOR 42" WIDE MAX. SIDELITE CAPACITY.

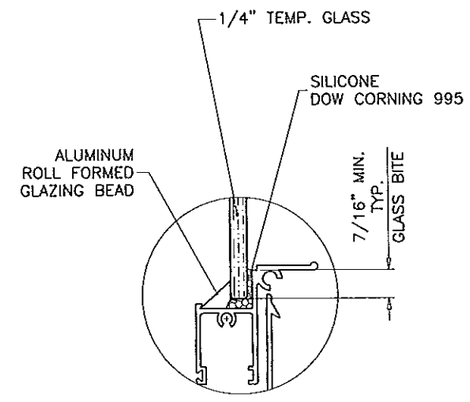

S.H. WINDOW

GLAZING DETAIL

WINDOW INSERT OPTION

SINGLE LEAF (X) DOORS WITH CURV-A-TECH S.H. WDW. INSERT			
DESIGN LOAD CAPACITY - PSF			
DOOR FRAME WIDTH (INCHES)	DOOR FRAME HEIGHT (INCHES)	1/4" TEMP. GLASS	
		EXT.(+)	INT.(-)
43"	98"	65.0	70.0

NOTE:
LOWER DESIGN PRESSURE OF SINGLE LEAF DOOR
OR SINGLE HUNG WINDOW (UNDER SEPARATE APPROVAL)
OR 42" WIDE MAX. SIDELITE SHALL CONTROL THE ENTIRE ASSEMBLY.

Approved as complying with the
Florida Buiding Code
Date 5/30/13
NOA# 12-0921.14
Miami Dade Product Control
By Ishaq I. Chanda

Engr: JAVAD AHMAD
CIVIL
FLA. PE # 70592
C.A.N. 3538
MAY 22 2013

AL-FAROOQ CORPORATION
ENGINEERS & PRODUCT DEVELOPMENT
1235 S.W. 87 AVE
MIAMI, FLORIDA 33174
TEL. (305) 264-8100 FAX. (305) 262-6978
COMP-ANL\W12-43CTC

SERIES 715 ALUM FRENCH DOOR W/ SIDELITES (N.I.)

CURV-A-TECH CORPORATION
930 W. 23rd STREET
HIALEAH, FL 33010
TEL. (305) 888-9631 FAX. (305) 888-9969

revisions:

no	date	by	description
A	03.06.13		REV. PER RER COMMENTS

date: 08-09-12
scale: 1/2"=1'-0"
dr. by: HAMID
chk. by:

drawing no.
W12-43

LOCK OPTIONS:

ACTIVE LEAF:

SURFACE MOUNT DEAD BOLT LOCK BY 'SULLIVAN & ASSOC.'
AT 45" FROM BOTTOM, KEY OPERATED ON
EXTERIOR AND THUMB TURN ON INTERIOR
FASTENED TO ACTIVE LEAF LOCK STILE WITH
(2) 1/4-28 X 2-1/2" OH MS
LEVER TYPE METALLIC HANDLE AT 37" FROM
BOTTOM, FASTENED TO ACTIVE LEAF LOCK STILE
WITH (2) #8-32 X 1-3/4" PH MS.

CONCEALED FLUSH BOLTS BY 'SULLIVAN & ASSOC.'
MANUALLY OPERATED LEVERS MOUNTED ON STILE FACE,
LOCATED AT 12" AND 68" FROM BOTTOM
FASTENED TO LOCK STILE WITH
#8 X 3/4" FH SMS (2) SCREWS PER BOLT

INACTIVE LEAF

CONCEALED FLUSH BOLTS BY 'SULLIVAN & ASSOC.'
MANUALLY OPERATED LEVERS MOUNTED ON
INSIDE FACE OF LEAF STILE LOCATED AT
28" FROM TOP AND 12" FROM BOTTOM
FASTENED TO LOCK STILE WITH
#8 X 3/4" FH SMS (2) PER BOLT

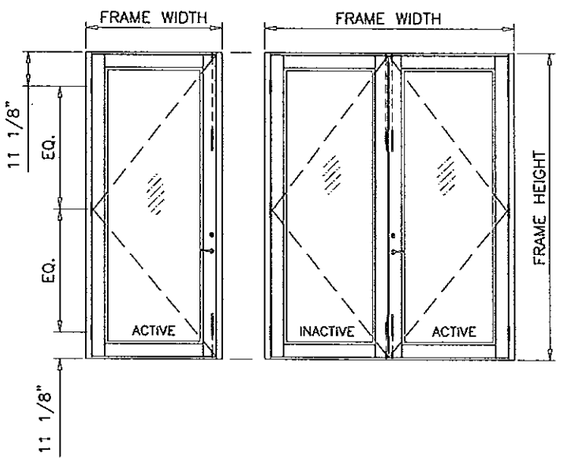

ACTIVE LEAF:

4 POINT LOCK SYSTEM BY 'INTERLOCK' AT 39"
FROM BOTTOM
HANDLE ACTIVATES DEAD BOLT AND SHOOT BOLTS
ENGAGING AT HEAD AND SILL
KEY OPERATED ON EXTERIOR AND THUMB TURN ON
INTERIOR
FASTENED TO ACTIVE LEAF LOCK STILE WITH
(2) #8-32 X 2" OH MS

INACTIVE LEAF:

CONCEALED FLUSH BOLTS BY 'SULLIVAN & ASSOC.'
MANUALLY OPERATED LEVERS MOUNTED ON STILE FACE,
LOCATED AT 12" AND 68" FROM BOTTOM
FASTENED TO LOCK STILE WITH
#8 X 3/4" FH SMS (2) SCREWS PER BOLT

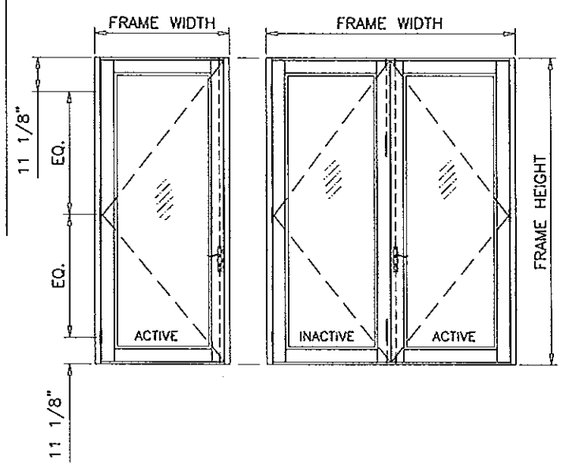

ACTIVE LEAF:

4 POINT LOCK SYSTEM BY 'INTERLOCK' AT 39"
FROM BOTTOM
HANDLE ACTIVATES DEAD BOLT AND SHOOT BOLTS
ENGAGING AT HEAD AND SILL
KEY OPERATED ON EXTERIOR AND THUMB TURN ON
INTERIOR
FASTENED TO ACTIVE LEAF LOCK STILE WITH
(2) #8-32 X 2" OH MS

INACTIVE LEAF:

2 POINT LOCK SYSTEM BY 'INTERLOCK' AT 39"
FROM BOTTOM
HANDLE ACTIVATES SHOOT BOLTS ENGAGING AT
HEAD AND SILL
FASTENED TO INACTIVE LEAF LOCK STILE WITH
(2) #8-32 X 2" OH MS

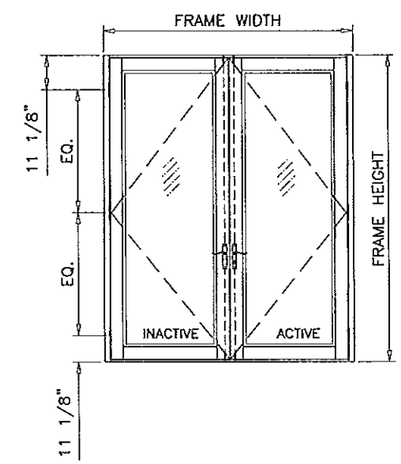

ACTIVE LEAF:

4 POINT LOCK SYSTEM BY 'INTERLOCK' AT 39"
FROM BOTTOM
HANDLE ACTIVATES DEAD BOLT AND SHOOT BOLTS
ENGAGING AT HEAD AND SILL
KEY OPERATED ON EXTERIOR AND THUMB TURN ON
INTERIOR
FASTENED TO ACTIVE LEAF LOCK STILE WITH
(2) #8-32 X 2" OH MS

INACTIVE LEAF:

CONCEALED FLUSH BOLTS BY 'SULLIVAN & ASSOC.'
MANUALLY OPERATED LEVERS MOUNTED ON STILE FACE,
LOCATED AT 12" AND 68" FROM BOTTOM
FASTENED TO LOCK STILE WITH
#8 X 3/4" FH SMS (2) SCREWS PER BOLT

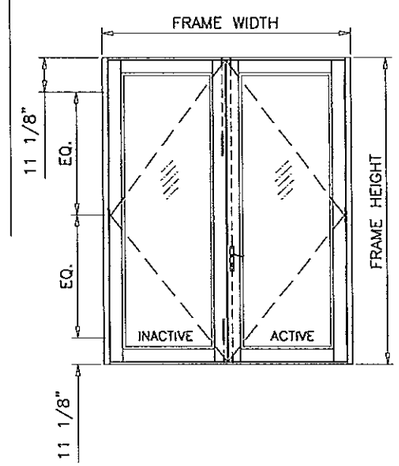

HINGES:

ALUMINUM/ST. STEEL HINGES BY 'SULLIVAN & ASSOC.
(3) HINGES PER LEAF AT 11-1/8" FROM TOP & BOTTOM
AND AT MIDSPAN
ST. STEEL HINGES REQUIRE BACK-UP PLATES

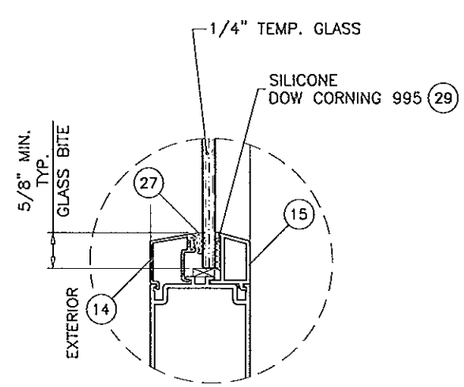

GLAZING DETAIL

Approved as complying with the
Florida Buiding Code
Date 5/30/13
NOA# 12-0921.14
Miami Dade Product Control
By

Engr: JAVAD AHMAD
CIVIL
FLA. PE # 70592
C.A.N. 3538

MAY 22 2013

AL-FAROOQ CORPORATION
ENGINEERS & PRODUCT DEVELOPMENT
1235 S.W. 87 AVE
MIAMI, FLORIDA 33174
TEL. (305) 264-8100 FAX. (305) 262-6978

COMP-ANL\W12-43CTC

SERIES 715 ALUM FRENCH DOOR W/ SIDELITES (N.I.)

CURV-A-TECH CORPORATION
930 W. 23rd STREET
HIALEAH, FL 33010
TEL. (305) 888-9631 FAX. (305) 888-9969

revisions:

no	date	by	description
A	03.06.13		REV. PER RER COMMENTS

date: 08-09-12
scale: 3/8" = 1"
dr. by: HAMID
chk. by:

drawing no.
W12-43

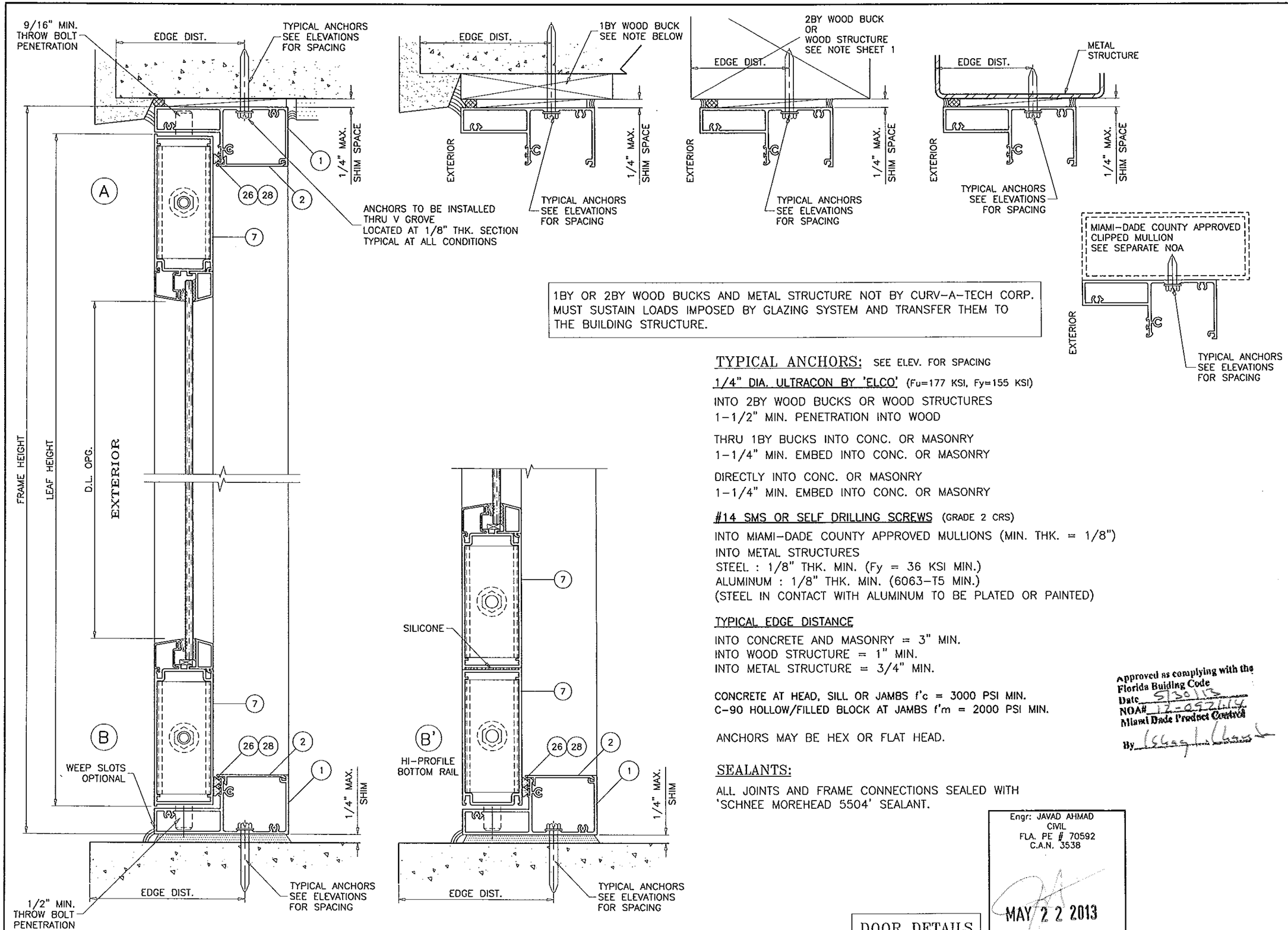

1BY OR 2BY WOOD BUCKS AND METAL STRUCTURE NOT BY CURV-A-TECH CORP. MUST SUSTAIN LOADS IMPOSED BY GLAZING SYSTEM AND TRANSFER THEM TO THE BUILDING STRUCTURE.

TYPICAL ANCHORS: SEE ELEV. FOR SPACING

1/4" DIA. ULTRACON BY 'ELCO' (Fu=177 KSI, Fy=155 KSI)

INTO 2BY WOOD BUCKS OR WOOD STRUCTURES
1-1/2" MIN. PENETRATION INTO WOOD

THRU 1BY BUCKS INTO CONC. OR MASONRY
1-1/4" MIN. EMBED INTO CONC. OR MASONRY

DIRECTLY INTO CONC. OR MASONRY
1-1/4" MIN. EMBED INTO CONC. OR MASONRY

#14 SMS OR SELF DRILLING SCREWS (GRADE 2 CRS)

INTO MIAMI-DADE COUNTY APPROVED MULLIONS (MIN. THK. = 1/8")
INTO METAL STRUCTURES
STEEL : 1/8" THK. MIN. (Fy = 36 KSI MIN.)
ALUMINUM : 1/8" THK. MIN. (6063-T5 MIN.)
(STEEL IN CONTACT WITH ALUMINUM TO BE PLATED OR PAINTED)

TYPICAL EDGE DISTANCE

INTO CONCRETE AND MASONRY = 3" MIN.
INTO WOOD STRUCTURE = 1" MIN.
INTO METAL STRUCTURE = 3/4" MIN.

CONCRETE AT HEAD, SILL OR JAMBS f'c = 3000 PSI MIN.
C-90 HOLLOW/FILLED BLOCK AT JAMBS f'm = 2000 PSI MIN.

ANCHORS MAY BE HEX OR FLAT HEAD.

SEALANTS:

ALL JOINTS AND FRAME CONNECTIONS SEALED WITH 'SCHNEE MOREHEAD 5504' SEALANT.

Approved as complying with the Florida Buiding Code
Date 5/30/13
NOA# 12-0924.04
Miami Dade Product Control
By

Engr: JAVAD AHMAD
CIVIL
FLA. PE # 70592
C.A.N. 3538

MAY 22 2013

DOOR DETAILS

AL-FAROOQ CORPORATION
ENGINEERS & PROJECT DEVELOPMENT
1235 S.W. 87 AVE
MIAMI, FLORIDA 33174
TEL. (305) 264-8100 FAX. (305) 262-6978
COMP-ANL\W12-43CTC

SERIES 715 ALUM FRENCH DOOR W/ SIDELITES (N.L.)

CURV-A-TECH CORPORATION
930 W. 23rd STREET
HIALEAH, FL 33010
TEL. (305) 888-9631 FAX. (305) 888-9969

revisions:			
no	date	by	description
A	03.06.13		REV. PER RER COMMENTS

date: 08-09-12
scale: 3/8" = 1"
dr. by: HAMID
chk. by:

drawing no. W12-43

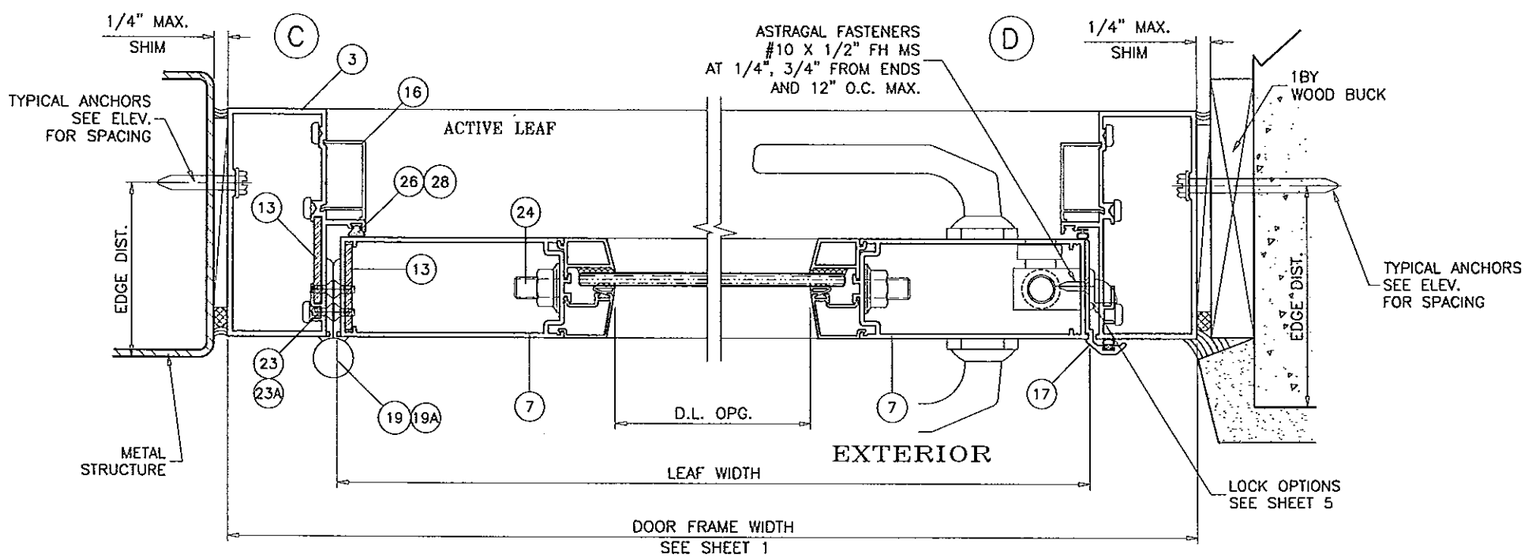

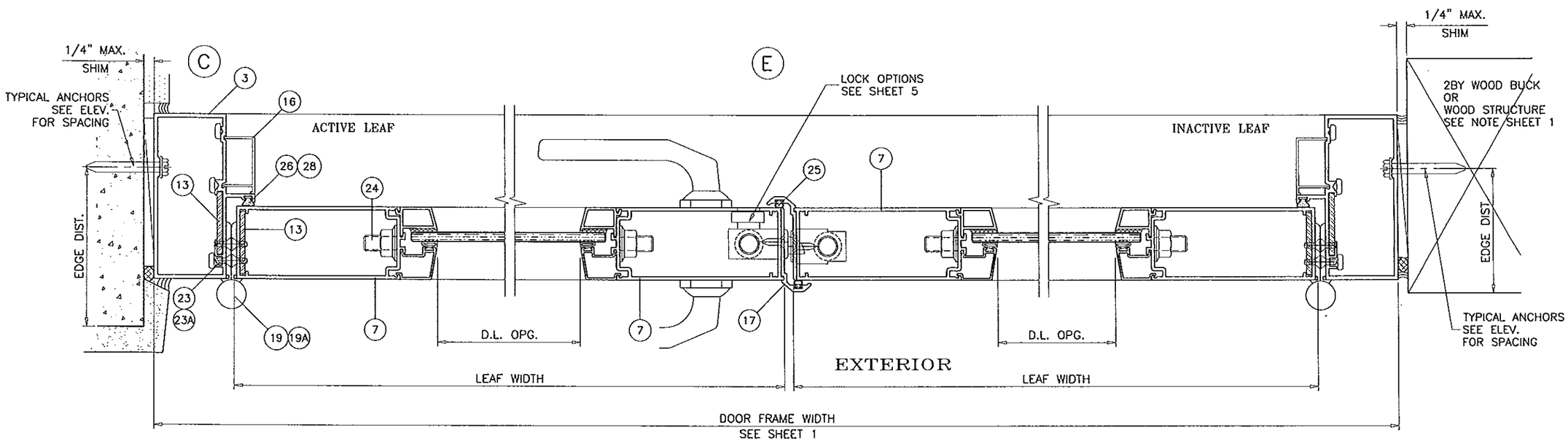

Approved as complying with the
Florida Buiding Code
Date 5/30/13
NOA# 12-0921.14
Miami Dade Product Control
By Ishaq I. Ahmad

Engr: JAVAD AHMAD
CIVIL
FLA. PE # 70592
C.A.N. 3538

MAY 22 2013

DOOR DETAILS

AL-FAROOQ CORPORATION
ENGINEERS & PRODUCT DEVELOPMENT
1235 S.W. 87 AVE
MIAMI, FLORIDA 33174
TEL. (305) 264-8100 FAX. (305) 262-6978
COMP-ANL\W12-43CTC

SERIES 715 ALUM FRENCH DOOR W/ SIDELITES (N.I.)

CURV-A-TECH CORPORATION
930 W. 23rd STREET
HIALEAH, FL 33010
TEL. (305) 888-9631 FAX. (305) 888-9969

revisions:

no	date	by	description
A	03.06.13		REV. PER RER COMMENTS

date: 08-09-12
scale: 3/8" = 1"
dr. by: HAMID
chk. by:

drawing no.
W12-43

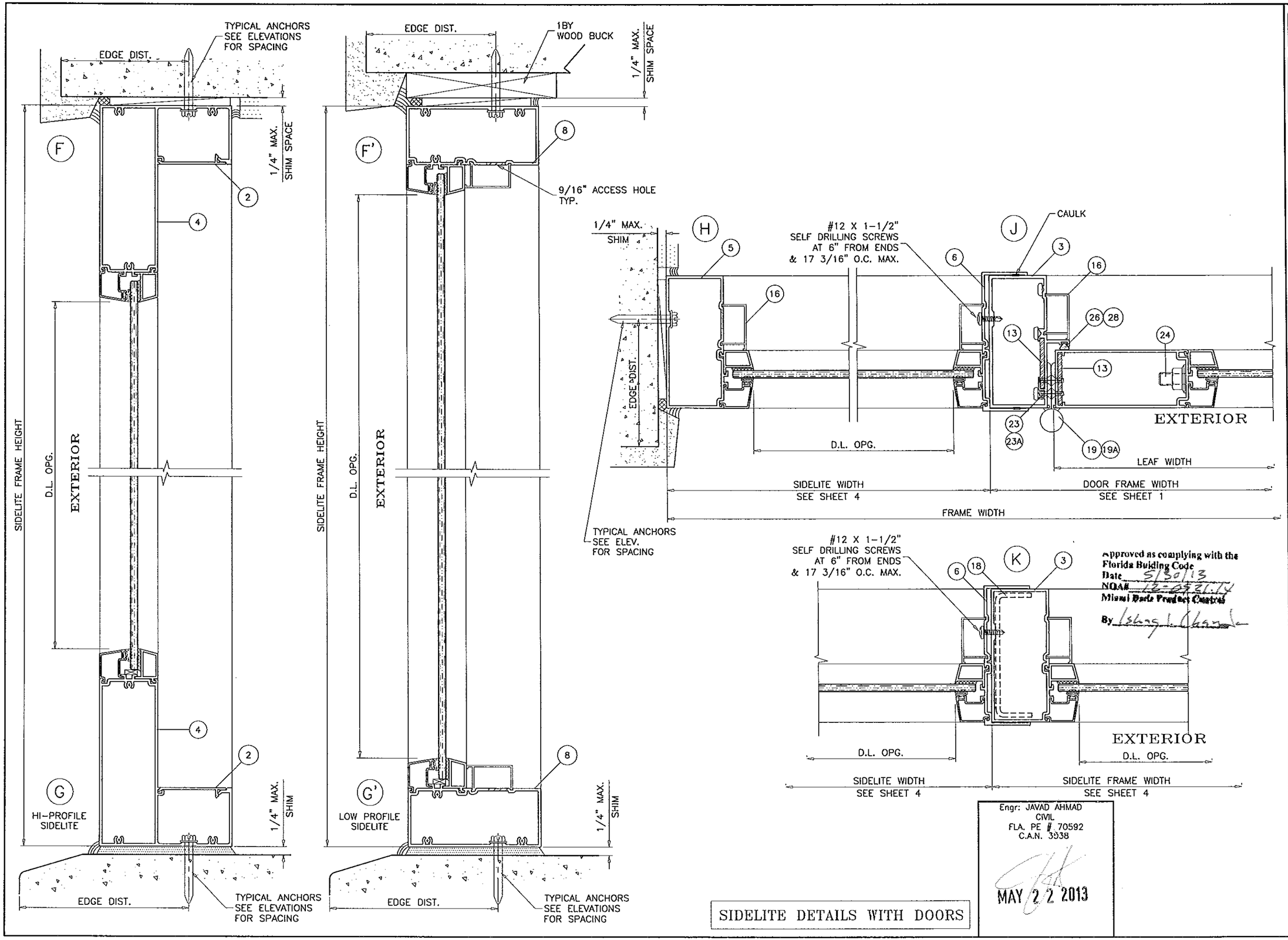

Approved as complying with the Florida Building Code
Date 5/30/13
NOA# 12-0521.14
Miami Dade Product Control
By Ishwar L. Chandra

Engr: JAVAD AHMAD
CIVIL
FLA. PE # 70592
C.A.N. 3838

MAY 22 2013

SIDELITE DETAILS WITH DOORS

AL-FAROOQ CORPORATION
ENGINEERS & PRODUCT DEVELOPMENT
1235 S.W. 87 AVE
MIAMI, FLORIDA 33174
TEL. (305) 264-8100 FAX. (305) 262-6978
COMP-ANL\W12-43CTC

SERIES 715 ALUM FRENCH DOOR W/ SIDELITES (N.I.)

CURV-A-TECH CORPORATION
930 W. 23rd STREET
HIALEAH, FL 33010
TEL. (305) 888-9631 FAX. (305) 888-9969

revisions:

no	date	by	description
A	03.06.13		REV. PER RER COMMENTS

date: 08-09-12
scale: 3/8" = 1"
dr. by: HAMID
chk. by:

drawing no.
W12-43

sheet 9 of 15

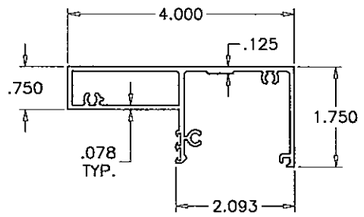

1 DOOR FRAME HEAD/SILL

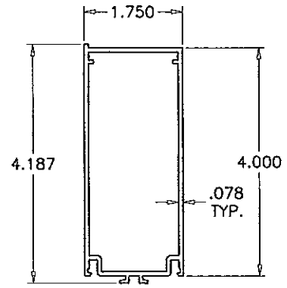

7 LEAF RAIL & STILE

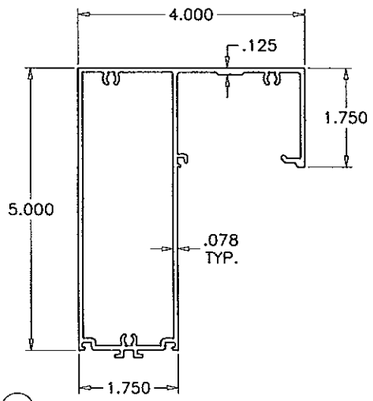

4 SIDELITE TOP & BOTTOM FRAME
HI-PROFILE

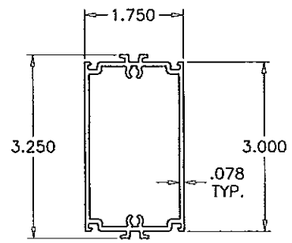

9 CHAIR RAIL

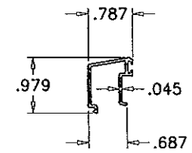

14 OUTER GLASS STOP

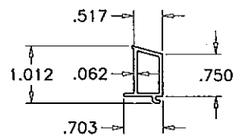

15 INNER GLASS STOP

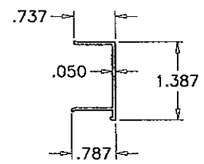

16 SNAP COVER

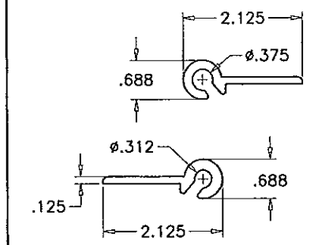

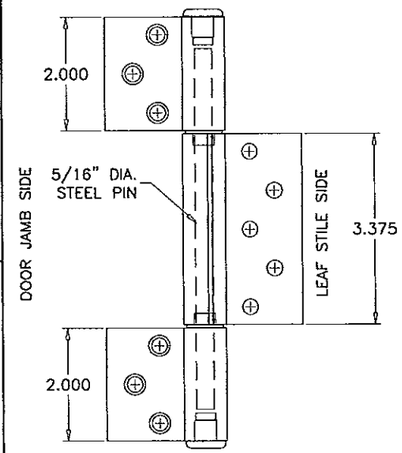

19 ALUMINUM HINGE

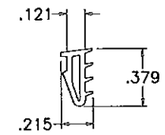

HARDNESS = 75 SHORE A
TENSILE STRENGTH (100% STRAIN)= 800 PSI
TENSILE STRENGTH (BREAK)= 1900 PSI
ELONGATION AT BREAK = 380%
TEAR STRENGTH = 250 LBF/IN
SPECIFIC GRAVITY = 1.27

27 GLAZING WEDGE
SCALE 1:1

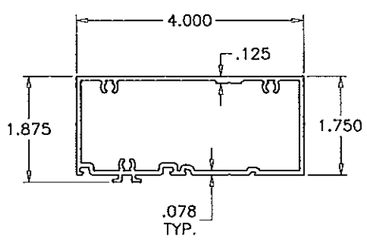

8 SIDELITE TOP & BOTTOM FRAME
LOW PROFILE

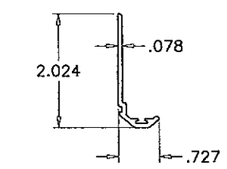

17 ASTRAGAL ADAPTER

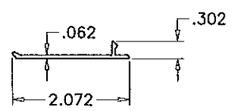

2 FRAME COVER

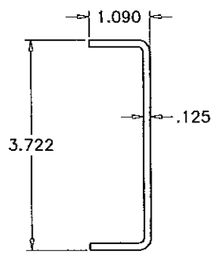

18 SIDELITE REINF.

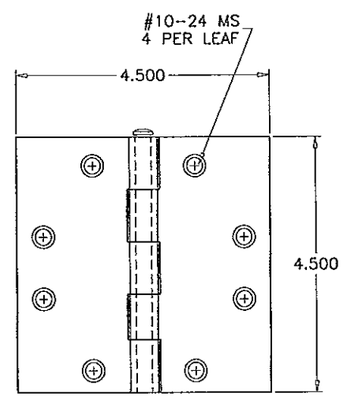

19A STEEL HINGE
.130" MIN. THK.

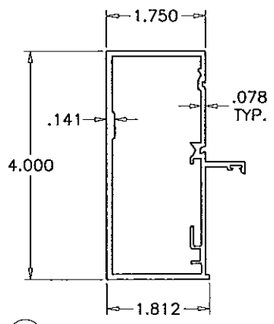

3 DOOR FRAME JAMB

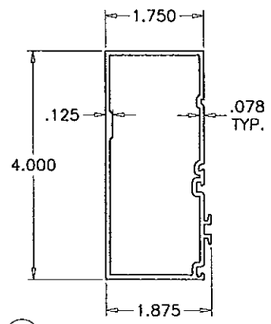

5 SIDELITE FRAME JAMB

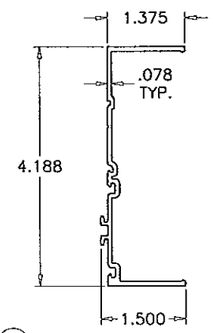

6 SIDELITE SLIP ON JAMB

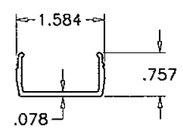

12 LEAF ALIGNMENT BRACKET

Approved as complying with the
Florida Building Code
Date 5/30/13
NOA# 12-0921.14
Miami Dade Product Control
By

Engr: JAVAD AHMAD
CIVIL
FLA. PE # 70592
C.A.N. 3538

MAY 22 2013

AL-FAROOQ CORPORATION
ENGINEERS & PRODUCT DEVELOPMENT
1235 S.W. 87 AVE
MIAMI, FLORIDA 33174
TEL. (305) 264-8100 FAX. (305) 262-6978

COMP-ANL\W12-43CTC

SERIES 715 ALUM FRENCH DOOR W/ SIDELITES (N.I.)

CURV-A-TECH CORPORATION
930 W. 23rd STREET
HIALEAH, FL 33010
TEL. (305) 888-9631 FAX. (305) 888-9969

revisions:

no	date	by	description
A	03.06.13	RER	PER COMMENTS

date: 08-09-12
scale: 3/8" = 1"
dr. by: HAMID
chk. by:

drawing no.
W12-43

ITEM #	PART #	REQD.	DESCRIPTION	MATERIAL	MANF./SUPPLIER/REMARKS
1	C301	2/ DOOR	DOOR FRAME HEAD/SILL	6063-T6	–
2	C302	2/ DOOR	FRAME COVER	6063-T6	–
3	C303	2/ DOOR	DOOR FRAME JAMB	6063-T6	–
4	C305	2/ SIDELITE	SIDELITE TOP & BOTTOM FRAME	6063-T6	–
5	C306	2/ SIDELITE	SIDELITE FRAME JAMB	6063-T6	–
6	C307	AS REQD.	SIDELITE SLIP ON JAMB	6063-T6	–
7	C308	4/ LEAF	LEAF RAIL AND STILE	6063-T6	–
8	C315	2/ SIDELITE	SIDELITE TOP & BOTTOM FRAME-LOW PROFILE	6063-T6	–
9	C318	AS REQD.	CHAIR RAIL	6063-T6	–
12	C314	4/ LEAF	LEAF ALIGNMENT BRACKET	6063-T6	–
13	1/8" X 1-1/2"	2/ HINGE	LEAF & HINGE BACK-UP PLATE	6063-T5	FOR ST. STEEL HINGE ONLY
14	C312	4/ LEAF	OUTER GLASS STOP	6063-T6	–
15	C310	4/ LEAF	INNER GLASS STOP	6063-T6	–
16	C304	2/ DOOR	SNAP COVER	6063-T6	–
17	C309	1/ LEAF	ASTRAGAL ADAPTER	6063-T6	–
18	–	AS REQD.	SIDELITE REINF. CHANNEL	3003-H14	–
19	FD-101	3/ LEAF	HINGES	ALUMINUM	SULLIVAN & ASSOC.
19A	CH-108-BS	3/ LEAF	4-1/2" X 4" HINGES	ST. STEEL	SULLIVAN & ASSOC.
22	#10 X 3/4"	3/ CORNER	FRAME ASSEMBLY SCREWS	–	SMS
23	#10 X 1/2"	11/ HINGE	ALUM HINGE INSTALLATION FASTENERS	–	FH SMS
23A	1/4-20 X 1/2"	8/ HINGE	ST. STEEL HINGE INSTALLATION FASTENERS	ST. STEEL	FH SMS
24	–	2/ LEAF	3/8" DIA. THREADED ROD	STEEL	–
25	E22318KN	AS REQD.	ASTRAGAL W'STRIPPING	–	ULTRAFAB
26	F24618KN	AS REQD.	BULB W'STRIPPING	SANTOPRENE	EPDM
27	C317	AS REQD.	GLAZING WEDGE	FLEX. PVC	CENTRAL PLASTICS
28	–	AS REQD.	BULB W'STRIPPING	VINYL	–
29	995	AS REQD.	GLAZING COMPOUND	SILICONE	DOW CORNING

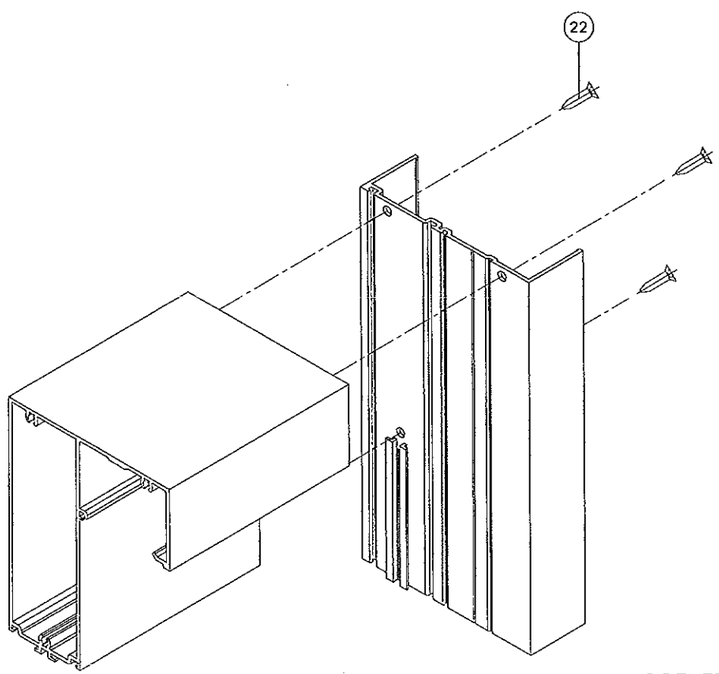

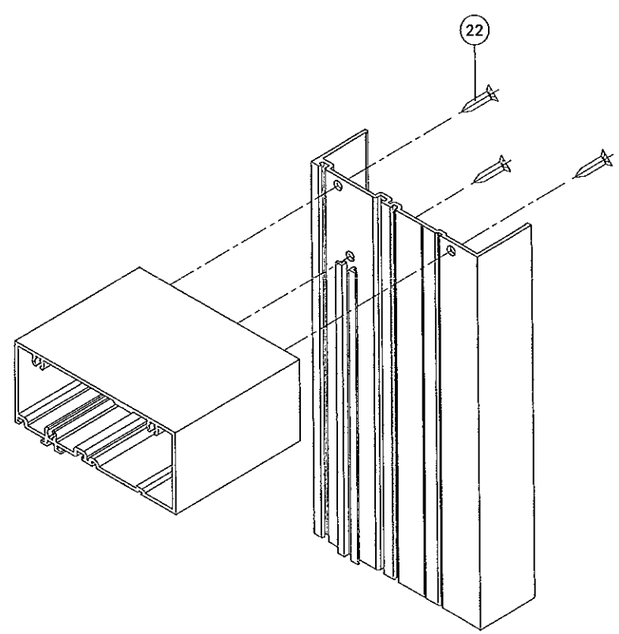

SIDELITE SLIP ON JAMB
TOP & BOTTOM CORNER

Approved as complying with the
Florida Building Code
Date 5/30/13
NOA# 12-0521.14
Miami Dade Product Control
By

Engr: JAVAD AHMAD
CIVIL
FLA. PE # 70592
C.A.N. 3538

MAY 22 2013

AL-FAROOQ CORPORATION
ENGINEERS & PRODUCT DEVELOPMENT
1235 S.W. 87 AVE
MIAMI, FLORIDA 33174
TEL. (305) 264-8100 FAX. (305) 262-6978

COMP-ANL\W12-43CTC

SERIES 715 ALUM FRENCH DOOR W/ SIDELITES (N.I.)

CURV-A-TECH CORPORATION
930 W. 23rd STREET
HIALEAH, FL 33010
TEL. (305) 888-9631 FAX. (305) 888-9969

revisions:

no	date	by	description
A	03.06.13		REV. PER RER COMMENTS

date: 08-09-12
scale: 3/8" = 1"
dr. by: HAMID
chk. by:

drawing no.
W12-43

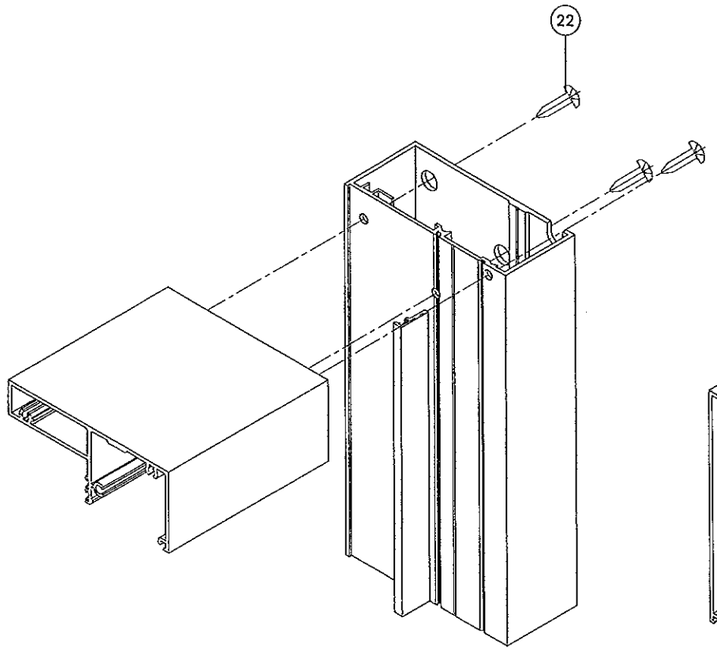

DOOR FRAME TOP & BOTTOM CORNER

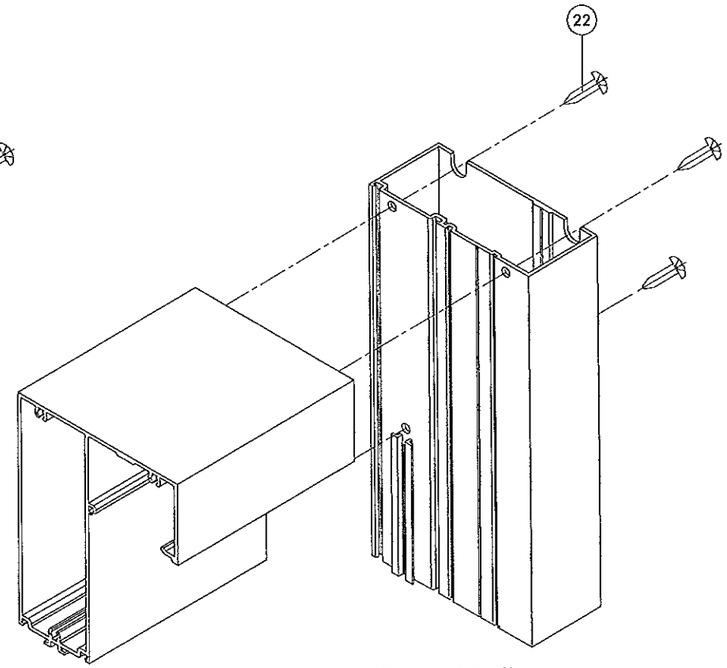

SIDELITE TOP & BOTTOM CORNER

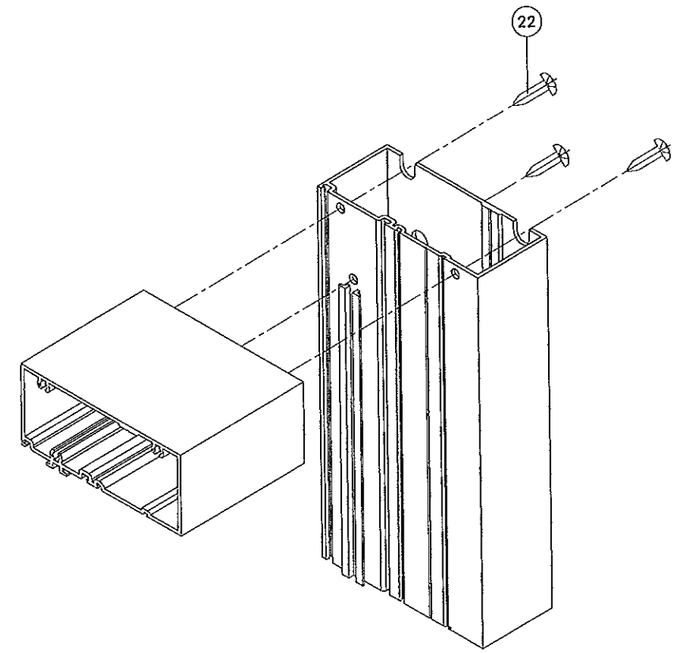

SIDELITE TOP & BOTTOM CORNER

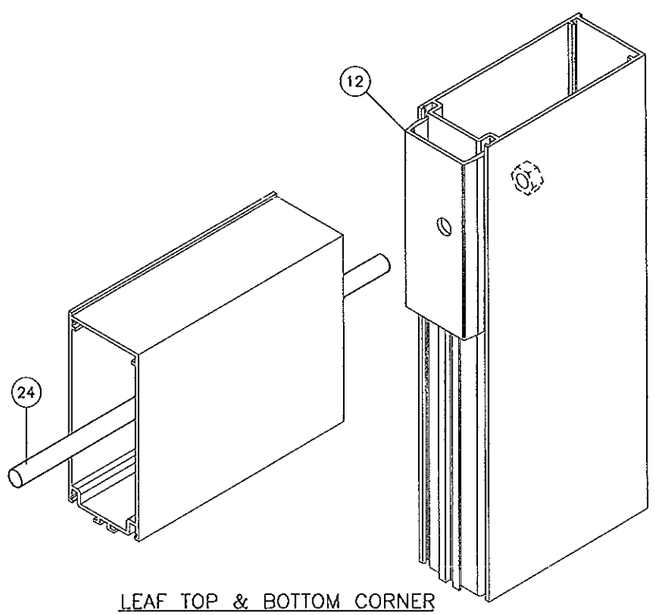

LEAF TOP & BOTTOM CORNER

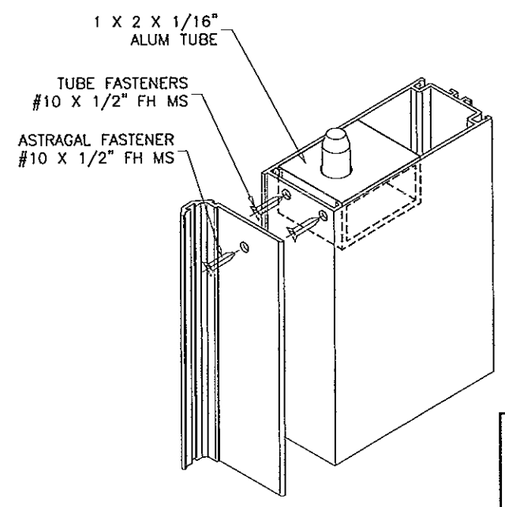

FLUSH BOLT GUIDE TOP & BOTTOM

Approved as complying with the Florida Buiding Code
Date 5/30/13
NOA# 12-0921.14
Miami Dade Product Control
By Sheng L. Chang

Engr: JAVAD AHMAD
CIVIL
FLA. PE # 70592
C.A.N. 3538

MAY 2 2 2013

AL-FAROOQ CORPORATION
ENGINEERS & PRODUCT DEVELOPMENT
1235 S.W. 87 AVE
MIAMI, FLORIDA 33174
TEL. (305) 264-8100 FAX. (305) 262-6978
COMP-ANL\W12-43CTC

SERIES 715 ALUM FRENCH DOOR W/ SIDELITES (N.I.)

CURV-A-TECH CORPORATION
930 W. 23rd STREET
HIALEAH, FL 33010
TEL. (305) 888-9631 FAX. (305) 888-9969

revisions:

no	date	by	description
A	03.06.13		REV. PER RER COMMENTS

date: 08-09-12
scale: 3/8" = 1"
dr. by: HAMID
chk. by:

drawing no.
W12-43

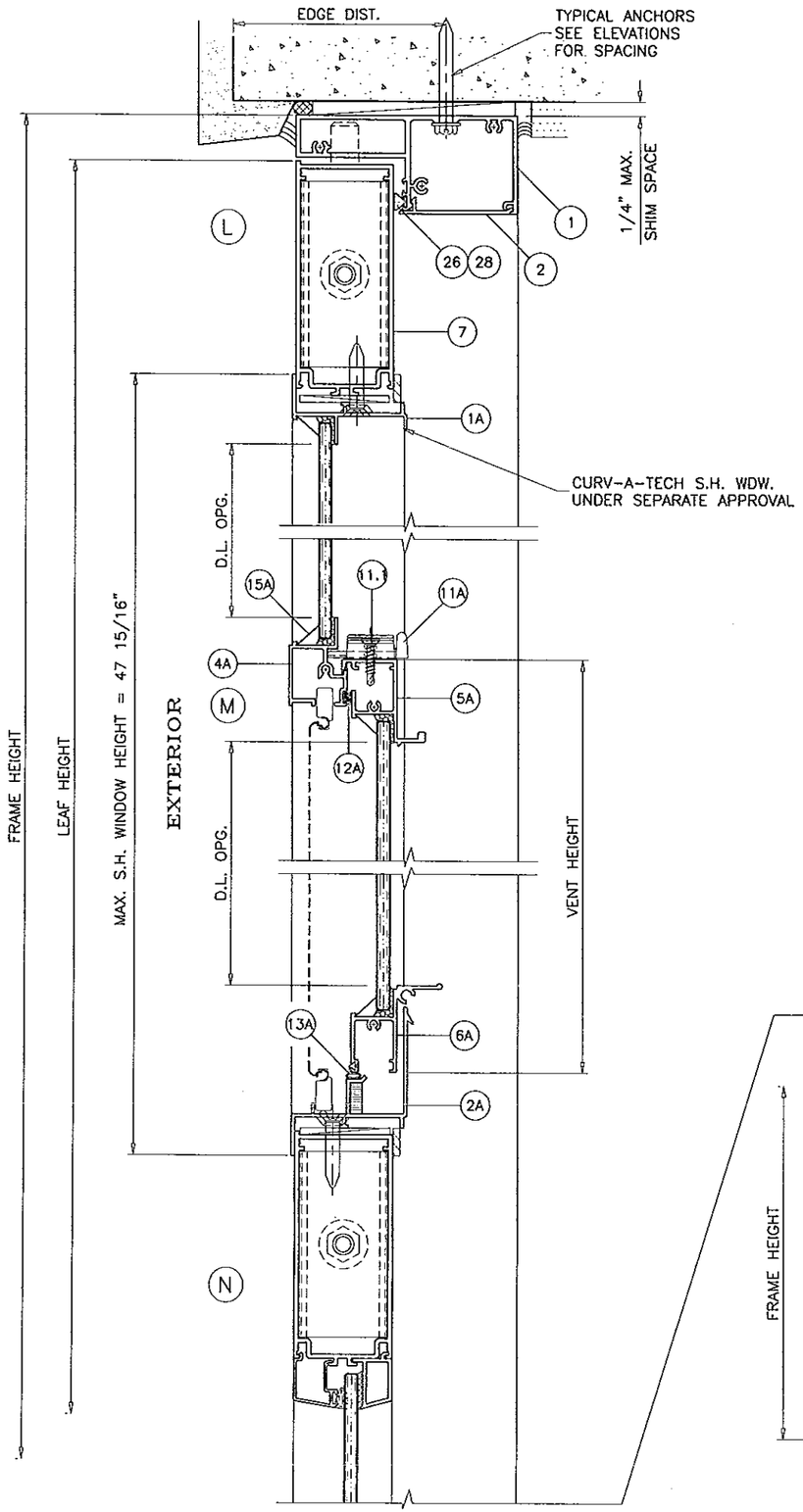

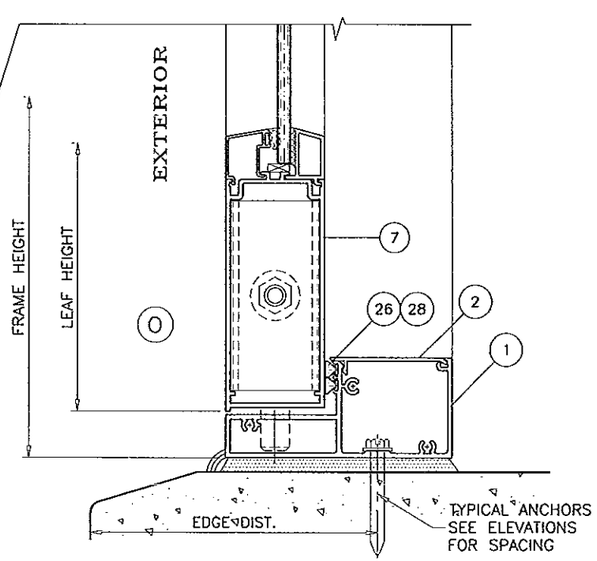

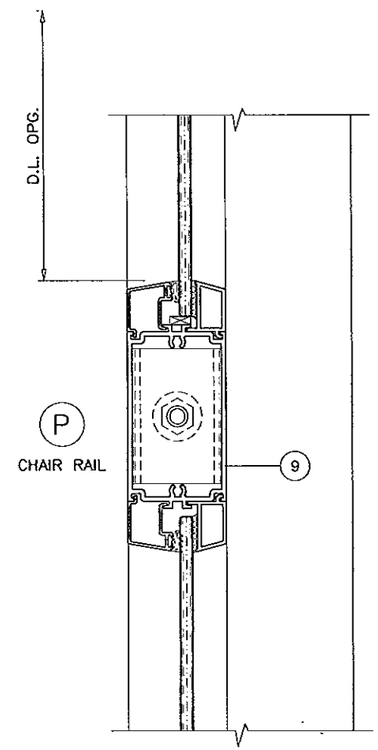

Approved as complying with the
Florida Building Code
Date 5/30/13
NOA# 12-0921.14
Miami Dade Product Control
By Ishwar L. Chand

SINGLE DOOR WITH SINGLE HUNG WINDOW INSERT
SEE SHEET 5

Engr: JAVAD AHMAD
CIVIL
FLA. PE # 70592
C.A.N. 3538

MAY 22 2013

AL-FAROOQ CORPORATION
ENGINEERS & PRODUCT DEVELOPMENT
1235 S.W. 87 AVE
MIAMI, FLORIDA 33174
TEL. (305) 264-8100 FAX. (305) 262-6978

COMP-ANL\W12-43CTC

SERIES 715 ALUM FRENCH DOOR W/ SIDELITES (N.I.)

CURV-A-TECH CORPORATION
930 W. 23rd STREET
HIALEAH, FL 33010
TEL. (305) 888-9631 FAX. (305) 888-9969

revisions:

no	date	by	description
A	03.06.13	REV. PER RER COMMENTS	

date: 08-09-12
scale: 3/8" = 1"
dr. by: HAMID
chk. by:

drawing no.
W12-43

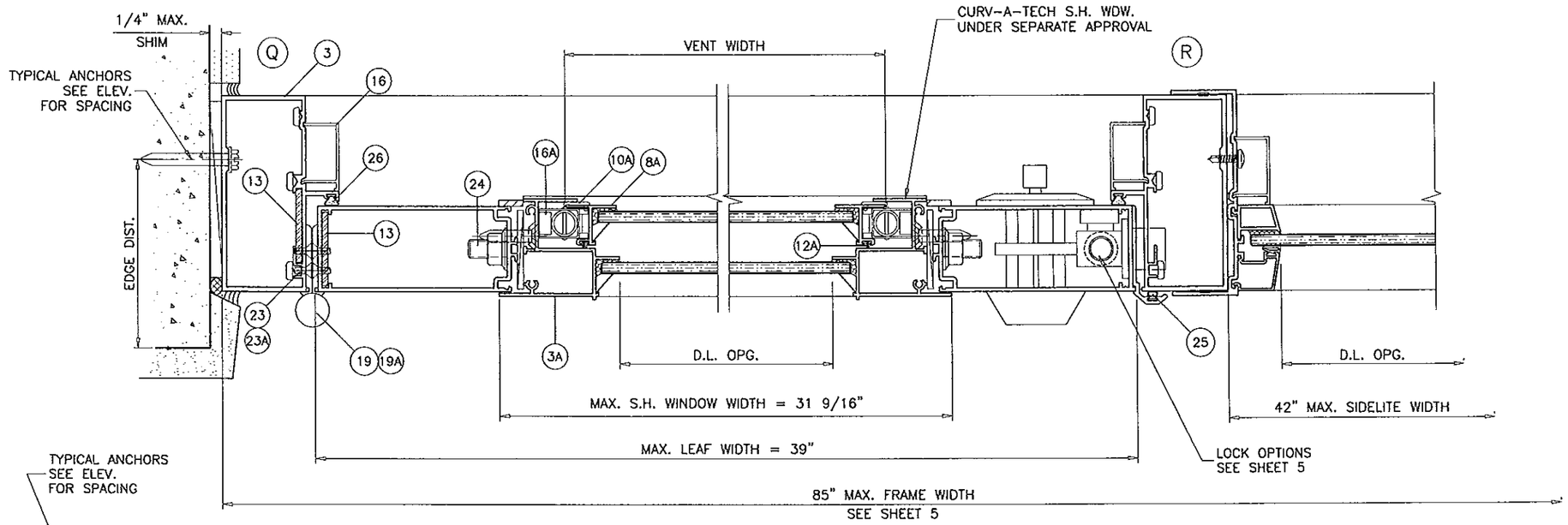

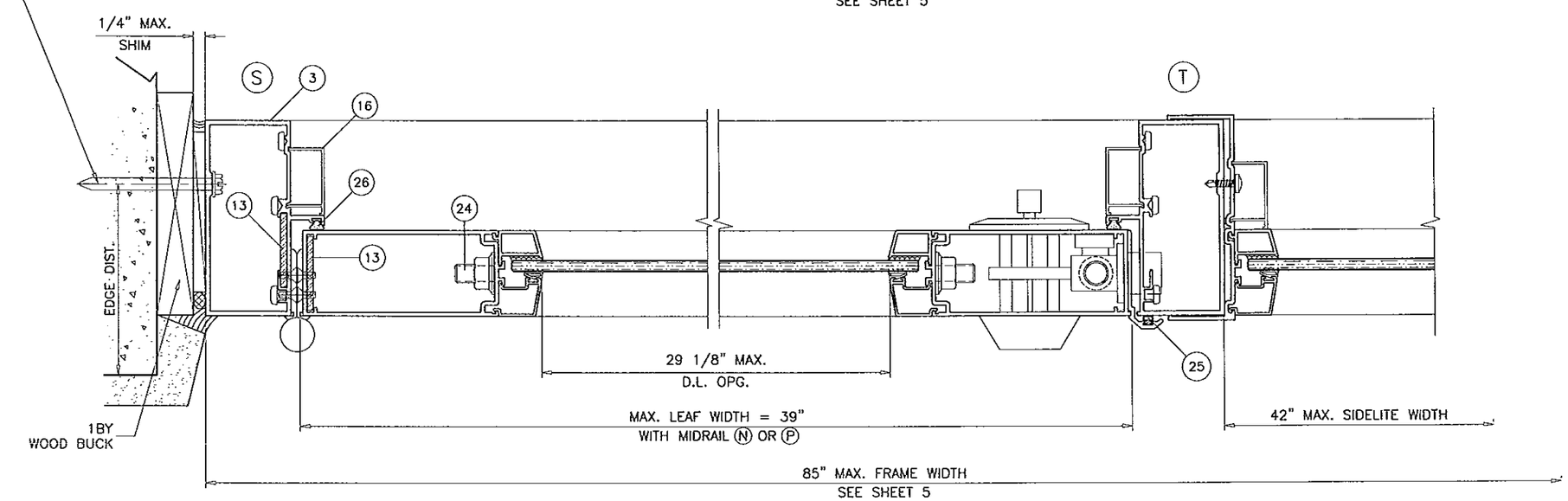

Approved as complying with the
Florida Building Code
Date 5/30/13
NOA# 13-0521.14
Miami Dade Product Control
By

SINGLE DOOR WITH SINGLE HUNG WINDOW INSERT MULLED WITH SIDELITE
SEE SHEET 5

Engr: JAVAD AHMAD
CIVIL
FLA. PE # 70592
C.A.N. 3538

MAY 2 2 2013

AL-FAROOQ CORPORATION
ENGINEERS & PRODUCT DEVELOPMENT
1235 S.W. 87 AVE
MIAMI, FLORIDA 33174
TEL. (305) 264-8100 FAX. (305) 262-6978

COMP-ANL\W12-43CTC

SERIES 715 ALUM FRENCH DOOR W/ SIDELITES (N.I.)

CURV-A-TECH CORPORATION
930 W. 23rd STREET
HIALEAH, FL 33010
TEL. (305) 888-9631 FAX. (305) 888-9969

revisions:

no	date	by	description
A	03.06.13		REV. PER RER COMMENTS

date: 08-09-12
scale: 3/8" = 1"
dr. by: HAMID
chk. by:

drawing no.
W12-43

sheet 14 of 15

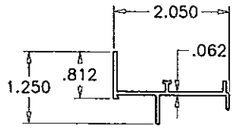

FRAME HEAD
C-3001
6063-T5
(1A)

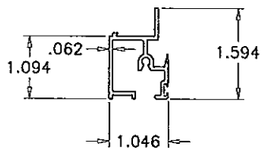

FIXED MEETING RAIL
C-3004
6063-T6
(4A)

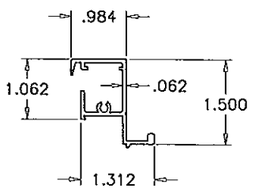

SASH TOP RAIL
C-3005
6063-T6
(5A)

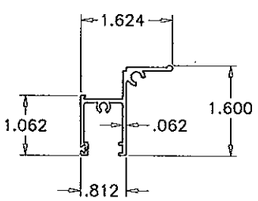

SASH BOTTOM RAIL
C-3006
6063-T6
(6A)

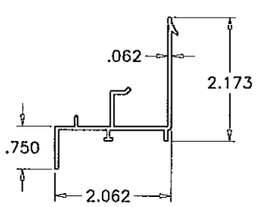

SILL
C-3002
6063-T5
(2A)

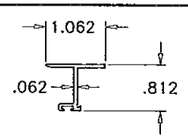

SASH SIDE RAIL
C-3007
6063-T5
(8A)

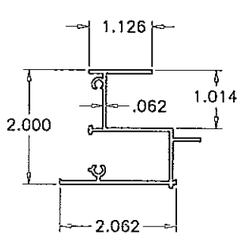

FRAME JAMB
C-3003
6063-T5
(3A)

ITEM #	PART #	QUANTITY	DESCRIPTION	MATERIAL	MANUF./SUPPLIER/REMARKS
1A	C-3001	1	FRAME HEAD	6063-T6	-
2A	C-3002	1	FRAME SILL	6063-T6	-
3A	C-3003	2	FRAME JAMB	6063-T5	-
4A	C-3004	1	FIXED MEETING RAIL	6063-T6	-
5A	C-3005	1	SASH TOP RAIL	6063-T6	-
6A	C-3006	1	SASH BOTTOM RAIL	6063-T6	-
8A	C-3007	2	SASH SIDE RAIL	6063-T5	-
9A	#8 X 1"	AS REQD.	ASSEMBLY SCREWS	-	P.H. SMS
10A	C-3085	4/ VENT	FACE GUIDES 3" FROM ENDS	NYLON	-
11A	C-3009	2/ VENT	SASH LATCH AT 6-1/4" FROM ENDS	6063-T6	WITH S.S. LEAF SPRING
11.1	#8 X 3/4"	2/ LATCH	LATCH INSTALLATION SCREWS	-	F.H. SMS
12A	3017-G	AS REQD.	FIN SEAL PILE	-	ULTRAFAB
13A	C-3011	AS REQD.	BULB WEATHER STRIP, DUROMETER ±70 SHORE A	VINYL	CENTRAL PLASTICS
15A	-	AS REQD.	ALUM GLAZING BEAD	ALUMINUM	ROLL FORMED
16A	-	2	BLOCK & TACKLE BALANCE	-	5/8" BOX, BLANCE SYSTEMS OR EQUIV.

CURV-A-TECH S.H. WDW. SERIES 300 UNDER SEPARATE APPROVAL
SHOWN FOR REFERENCE ONLY.

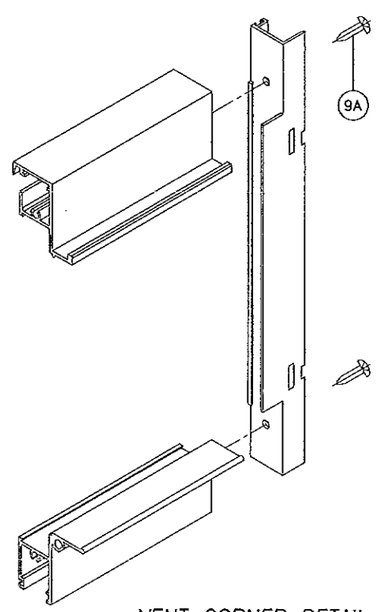

VENT CORNER DETAIL

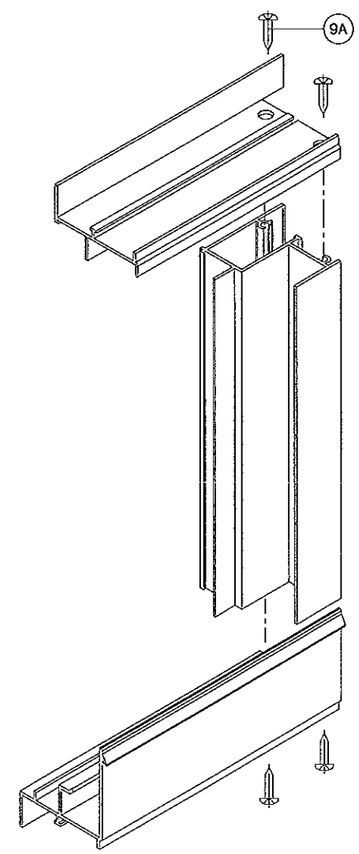

FRAME CORNER DETAIL

Approved as complying with the
Florida Building Code
Date MAY 30, 2013
NOA# 12-0921.14
Miami Dade Product Control
By

Engr: JAVAD AHMAD
CIVIL
FLA. PE # 70592
C.A.N. 3538

MAY 22 2013

AL-FAROOQ CORPORATION
ENGINEERS & PRODUCT DEVELOPMENT
1235 S.W. 87 AVE
MIAMI, FLORIDA 33174
TEL. (305) 264-8100 FAX. (305) 262-6978

COMP-ANL\W12-43CTC

SERIES 715 ALUM FRENCH DOOR W/ SIDELITES (N.I.)

CURV-A-TECH CORPORATION
930 W. 23rd STREET
HIALEAH, FL 33010
TEL. (305) 888-9631 FAX. (305) 888-9969

revisions:

no	date	by	description
A	03.06.13		REV. PER RER COMMENTS

date: 08-09-12
scale: 3/8" = 1"
dr. by: HAMID
chk. by:

drawing no.
W12-43