MIAMI-DADE COUNTY
DEPARTMENT OF REGULATORY AND ECONOMIC RESOURCES (RER)
BOARD AND CODE ADMINISTRATION DIVISION

MIAMI-DADE COUNTY
PRODUCT CONTROL SECTION
11805 SW 26 Street, Room 208
Miami, Florida 33175-2474
T (786) 315-2590 F (786) 315-2599
www.miamidade.gov/economy

NOTICE OF ACCEPTANCE (NOA)

Oldcastle BuildingEnvelope, Inc.
803 Airport Road
Terrell, TX 75160

SCOPE:
This NOA is being issued under the applicable rules and regulations governing the use of construction materials. The documentation submitted has been reviewed and accepted by Miami-Dade County RER- Product Control Section to be used in Miami Dade County and other areas where allowed by the Authority Having Jurisdiction (AHJ).

This NOA shall not be valid after the expiration date stated below. The Miami-Dade County Product Control Section (In Miami Dade County) and/or the AHJ (in areas other than Miami Dade County) reserve the right to have this product or material tested for quality assurance purposes. If this product or material fails to perform in the accepted manner, the manufacturer will incur the expense of such testing and the AHJ may immediately revoke, modify, or suspend the use of such product or material within their jurisdiction. RER reserves the right to revoke this acceptance, if it is determined by Miami-Dade County Product Control Section that this product or material fails to meet the requirements of the applicable building code.

This product is approved as described herein, and has been designed to comply with the High Velocity Hurricane Zone of the Florida Building Code.

DESCRIPTION: **Custom Aluminum Framed Skylight System**

APPROVAL DOCUMENT: Drawing No. 11-136, titled " Stormmax Hurricane Resistant Skylight Small Missile ", prepared by Tilteco, Inc., last revision #1 dated December 01, 2011, sheets 1 through 10 of 10, & sheet 2A, signed and sealed by Walter A. Tillit Jr., P.E., bearing the Miami-Dade County Product Control Renewal stamp with the Notice of Acceptance number and expiration date by Miami-Dade County Product Control Section.

MISSILE IMPACT RATING: **Small Missile Impact Resistant**

LABELING: Each unit shall bear a permanent label with the manufacturer's name or logo, city, state and the following statement: "Miami-Dade County Product Control Approved", unless otherwise noted herein.

RENEWAL of this NOA shall be considered after a renewal application has been filed and there has been no change in the applicable building code negatively affecting the performance of this product.

TERMINATION of this NOA will occur after the expiration date or if there has been a revision or change in the materials, use, and/or manufacture of the product or process. Misuse of this NOA as an endorsement of any product, for sales, advertising or any other purposes shall automatically terminate this NOA. Failure to comply with any section of this NOA shall be cause for termination and removal of NOA.

ADVERTISEMENT: The NOA number preceded by the words Miami-Dade County, Florida, and followed by the expiration date may be displayed in advertising literature. If any portion of the NOA is displayed, then it shall be done in its entirety.

INSPECTION: A copy of this entire NOA shall be provided to the user by the manufacturer or its distributors and shall be available for inspection at the job site at the request of the Building Official.

This NOA **renews NOA # 11-0923.02** and consists of this page 1, evidence submitted pages E-1, E-2, & E-3 as well as approval document mentioned above.
The submitted documentation was reviewed by **Helmy A. Makar, P.E., M.S.**

MIAMI-DADE COUNTY APPROVED

05/09/2013

NOA No. 12-0924.01
Expiration Date: 09/24/2013
Approval Date: 05/09/2013

Oldcastle BuildingEnvelope, Inc.

NOTICE OF ACCEPTANCE: EVIDENCE SUBMITTED

1. EVIDENCE SUBMITTED UNDER PREVIOUS APPROVAL # 97-0903.13

A. DRAWINGS

1. Drawing No. E, titled "BMS-3000 HR Product Approval", prepared by David S. Barron, P.E., last revised on 05/18/98, sheets 1 through 12 of 12, signed and sealed by David S. Barron, P.E.

B. TESTS

1. Test report on Small Missile Impact Test, Cyclic Load Test and Uniform Static air Pressure Test on Naturalite Skylight Systems, prepared by Hurricane Test Laboratory, Inc., Report No. 0142-0808-97, dated 08/11/97 and 08/22/97, signed and sealed by Timothy S. Marshall, P.E.

C. CALCULATIONS

1. Calculation titled "BMS-3000 HR Skylight System", dated 08/26/97, pages 1 through 21 of 21, prepared by David S. Barron, P.E., signed and sealed by David S. Barron, P.E.

D. MATERIAL CERTIFICATIONS

1. Mill Certified Test Report issued by Viracon, dated 08/27/97, with the glass strength analysis signed by Christine Shaffer.

2. The Die Drawing Numbers 4057, 4062, 3410, 3905, 3950, by EPI Architectural Systems, Inc., Part No. AC329/330, 74765-A, 74767-A, 74770, 74769-A, 74772-A, by Naturalite/EPI, Inc., Die Drawing No. 6475 by National Northeast Corporation, Die Drawing No. 75951, 75979, 75953A, 75952A, 75948, by Naturalite.

2. EVIDENCE SUBMITTED UNDER PREVIOUS APPROVAL # 01-0118.02

A. DRAWINGS

1. None.

B. TESTS

1. None.

C. CALCULATIONS

1. None.

D. MATERIAL CERTIFICATIONS

1. None.

3. EVIDENCE SUBMITTED UNDER PREVIOUS APPROVAL #06-0412.01

A. DRAWINGS

1. None.

Helmy A. Makar, P.E., M.S.
Product Control Unit Supervisor
NOA No. 12-0924.01
Expiration Date: 09/24/2013
Approval Date: 05/09/2013

NOTICE OF ACCEPTANCE: EVIDENCE SUBMITTED

B. TESTS

1. None.

C. CALCULATIONS

1. Calculation titled "BMS-3000 HR Skylight System", dated 02/01/99, pages 1 through 21 of 21, prepared by David S. Barron, P.E., signed and sealed by David S. Barron, P.E.

D. QUALITY ASSURANCE

1. By Miami-Dade County Building Code Compliance office.

E. MATERIAL CERTIFICATIONS

1. None.

4. EVIDENCE SUBMITTED UNDER PREVIOUS APPROVAL # 11-0923.02

A. DRAWINGS

1. Drawing No. 11-136, titled "Stormmax Hurricane Resistant Skylight Small Missile", prepared by Tilteco, Inc., last revision #1 dated December 01, 2011, sheets 1 through 10 of 10, and sheet 2A, signed and sealed by Walter A. Tillit Jr., P.E.

B. TESTS

1. None.

C. CALCULATIONS

1. Calculation titled "MIAMI Dade County Product Control Approval FBC 2007 Upgrade ", dated 09/26/11, pages 1 through 9 of 9, prepared by Tilteco, Inc., signed and sealed by Walter A. Tillit Jr., P.E.

D. QUALITY ASSURANCE

1. By Miami-Dade County Department of Permitting, Environment, and Regulatory Affairs (PERA).

E. MATERIAL CERTIFICATIONS

1. None.

F. OTHERS

1. Sales of assets and request of name change letter, dated August 30, 2011, signed by Mollie L. Hines.

Helmy A. Makar, P.E., M.S.
Product Control Unit Supervisor
NOA No. 12-0924.01
Expiration Date: 09/24/2013
Approval Date: 05/09/2013

NOTICE OF ACCEPTANCE: EVIDENCE SUBMITTED

5. NEW EVIDENCE SUBMITTED

A. DRAWINGS

1. None.

B. TESTS

1. None.

C. CALCULATIONS

1. None.

D. QUALITY ASSURANCE

1. By Miami-Dade County Department of Regulatory and Economic Resources.

E. MATERIAL CERTIFICATIONS

1. None.

Helmy A. Makar, P.E., M.S.
Product Control Unit Supervisor
NOA No. 12-0924.01
Expiration Date: 09/24/2013
Approval Date: 05/09/2013

GENERAL NOTES:

1. SKYLIGHT SHOWN ON THIS PRODUCT APPROVAL DOCUMENT (P.A.D.) HAS BEEN VERIFIED FOR COMPLIANCE IN ACCORDANCE WITH THE 2007 & 2010 EDITIONS OF THE FLORIDA BUILDING CODE. THIS SKYLIGHT MAY BE INSTALLED AT HIGH VELOCITY HURRICANE ZONES.

   DESIGN WIND LOADS SHALL BE DETERMINED AS PER SECTION 1620 OF THE ABOVE MENTIONED CODES, USING ASCE 7-05 STANDARD FOR INSTALLATIONS UNDER 2007 FBC & ASCE 7-10 FOR INSTALLATIONS UNDER 2010 FBC AND SHALL NOT EXCEED THE MAXIMUM (A.S.D.) DESIGN PRESSURE RATINGS INDICATED ON NOTE 2 BELOW.

   IN ORDER TO VERIFY THE ABOVE CONDITION, ULTIMATE DESIGN WIND LOADS DETERMINED PER ASCE 7-10 SHALL BE FIRST REDUCED TO A.S.D. DESIGN WIND LOADS BY MULTIPLYING THEM BY 0.6 IN ORDER TO COMPARE THESE W/ MAX. (A.S.D) DESIGN PRESSURE RATINGS INDICATED ON NOTE 2 BELOW.

   IN ORDER TO VERIFY THAT ANCHORS ON THIS P.A.D. ARE NOT OVERSTRESSED UNDER A.S.D DESIGN PRESSURE RATINGS INDICATED ON NOTE 2 BELOW. FOR EVERY SINGLE APPLICATION OF THIS SKYLIGHT SYSTEM A 33% INCREASE IN ALLOWABLE STRESS FOR WIND LOADS SHALL NOT BE USED IN THEIR ANALYSIS.

1A. SHOP DRAWINGS AND STRUCTURAL CALCULATIONS SHALL BE SUBMITTED FOR EVERY PERMIT. DRAWINGS MAY INCLUDE LARGER SKYLIGHT WIDTH, LENGTH AND RISE W/ CORRESPONDING LARGER CROSS SECTION RAFTERS & MULLIONS, BUT PRESSURE RATING AS WELL AS MAX. GLASS PANEL SIZE SHALL NOT EXCEED THOSE INDICATED ON THIS DRAWING (SEE NOTES 2 AND 11 RESPECTIVELY). THIS P.A.D. COVERS GABLE SHAPE SKYLIGHTS. OTHER SHAPES/CONFIGURATIONS W/ SLOPED GLASS MAY BE ALSO ACCEPTED, PROVIDED THAT ABOVE MENTIONED CONDITIONS ARE COMPLIED WITH. THE DESIGN OF LARGER COMPONENTS FOR LARGER SKYLIGHTS SHALL BE PERFORMED BY A FLORIDA P.E. AND REVIEWED BY THE STRUCTURAL PLANS EXAMINER OF THE CORRESPONDING BUILDING DEPARTMENT ON A JOB SPECIFIC BASIS. (SEE NOTE 18).

2. A.S.D. DESIGN PRESSURE RATING AT ROOF IS: +67.5 psf (WINDWARD SIDE), -125.0 psf (LEEWARD SIDE).
   A.S.D. DESIGN PRESSURE RATING AT WALL IS: +67.5, -125.0 psf.
   A.S.D. DESIGN PRESSURE RATING AS PER SECTION 1626 OF THE FLORIDA BUILDING CODE, PER PROTOCOLS TAS 201, 202, 203, PER HURRICANE TESTING LABORATORY REPORT # 0142-0808-97
   WATER AND AIR INFILTRATION TESTING AS PER PROTOCOL TAS 202, QUALIFYING ASTM E 331 AND ASTM E 283 RESPECTIVELY.

3. STRUCTURAL ADEQUACY OF SUPPORTING STRUCTURAL MEMBERS IS NOT PART OF THIS P.A.D. STRUCTURAL DESIGN OF THE STRUCTURE THAT WILL PROVIDE SUPPORT TO THIS SKYLIGHT SHALL BE PERFORMED BY THE STRUCTURAL ENGINEER OF RECORD FOR THE PROJECT. STRUCTURAL DESIGN SHALL INCLUDE AND TAKE INTO CONSIDERATION THE ACTUAL Vx AND Vy LOADS TRANSFERRED FROM THIS SKYLIGHT TO THE SUPPORT STRUCTURE, BASED ON DEAD, LIVE & WIND LOADS AND USING THE LOAD COMBINATIONS OF A.S.C.E. 7 STANDARD. ADEQUACY OF SUPPORTING STRUCTURAL MEMBERS SHALL BE REVIEWED BY THE STRUCTURAL PLANS EXAMINER OF THE CORRESPONDING BUILDING DEPARTMENT ON A JOB SPECIFIC BASIS.

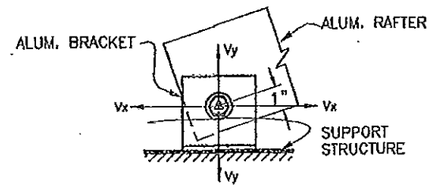

4. ALL ALUMINUM EXTRUSIONS SHALL BE ALUMINUM ASSOCIATION ALLOY AND TEMPER AS SHOWN ON SHEETS 2 & 2A

5. ALL ALUMINUM SHEET SHALL BE ALUMINUM ASSOCIATION 3105-H14 ALLOY AND HARDNESS.

6. ALL SCREWS TO BE STAINLESS STEEL AISI SERIES 304 OR 316 STRAIN HARDENED OR HEAT TREATED WITH MIN. TENSILE LOAD CAPACITY Tu=4275# & MIN. ULTIMATE SHEAR LOAD CAPACITY Su=2700#, PER ASTM B-593 & B-594 & SHALL COMPLY W/ FLORIDA BUILDING CODE SECTION 2411.3.3.4.

7. ALL STAINLESS STEEL POP RIVETS TO BE AISI SERIES 304 (MIN.) W/ TENSILE LOAD CAPACITY=700# & ULTIMATE SHEAR LOAD CAPACITY= 550#

8. BOLTS TO BE STAINLESS STEEL AISI SERIES 304 OR 316 WITH 50 ksi (Min.) YIELD STRENGTH AND 90 ksi TENSILE STRENGTH, PER ASTM B-593 AND B-594.

9. SKYLIGHT SYSTEM SHALL COMPRISE ALL COMPONENTS DESCRIBED ON BILL OF MATERIALS, SHEET 2 OF 10

10. ALL FLASHING TO BE LAPPED 3" AND SET ON A BED OF SILICONE SEALANT.

11. GLASS OPTIONS:

    9/16" (NOMINAL) LAMINATED GLASS CONSISTING OF 1/4" HEAT STRENGTHENED GLASS + .090" PVB INTERLAYER + 1/4" HEAT STRENGTHENED GLASS, PVB INTERLAYER IS EITHER SOLUTIA SAFLEX PVB OR DUPONT BUTACITE PVB
    MAX GLASS PANEL D.L.O SIZE IS 57 1/2" x 98 5/8".
    MAX GLASS AREA = 39.38 FT² (CLEAR, BETWEEN SUPPORTS)

12. ALL WELDING TO CONFORM TO THE AMERICAN WELDING SOCIETY A.W.S. D1.2 STANDARD. USE CERTIFIED WELDERS. USE ER-4043 OR ER-5356 ELECTRODES.

13. ALUMINUM MEMBERS IN CONTACT WITH CONCRETE SHALL BE PROTECTED ACCORDINGLY WITH SECTION 2003.8.4.4 OF THE FLORIDA BUILDING CODE.

    ALUMINUM MEMBERS IN CONTACT WITH STEEL SHALL BE PROTECTED ACCORDINGLY WITH SECTION 2003.8.4.2 OF THE FLORIDA BUILDING CODE.

    ALUMINUM MEMBERS IN CONTACT WITH WOOD SHALL BE PROTECTED ACCORDINGLY WITH SECTIONS 2003.8.4.5 & 2003.8.4.6 OF THE FLORIDA BUILDING CODE.

14. PAINT, FINISH AND COLOR TO BE SELECTED BY ARCHITECT OF RECORD FOR THE JOB IN COORDINATION W/ OLDCASTLE BUILDING ENVELOPE, AND SHALL COMPLY WITH AAMA 1600 SPECIFICATION, SECTION 3.11.

15. IT SHALL BE THE RESPONSIBILITY OF THE CONTRACTOR TO VERIFY THE SOUNDNESS OF THE STRUCTURE WHERE THE SKYLIGHT IS TO BE ATTACHED TO INSURE PROPER ANCHORAGE. SEE NOTE 3 ABOVE.
    CONTRACTOR IS TO SEAL/CAULK ALL SKYLIGHT COMPONENT EDGES AS INDICATED ON THIS DRAWING TO PREVENT WIND/RAIN INTRUSION.

16. SKYLIGHT INSTALLATION SHALL COMPLY WITH SPECS INDICATED IN THIS DRAWING PLUS ANY BUILDING AND ZONING REGULATIONS PROVIDED BY THE JURISDICTION WHERE PERMIT IS APPLIED TO.

17. (a) THE PRODUCT APPROVAL DOCUMENT (P.A.D.) PREPARED BY THIS ENGINEER IS GENERIC AND DOES NOT PROVIDE INFORMATION FOR A SITE SPECIFIC PROJECT.

    (b) CONTRACTOR TO BE RESPONSIBLE FOR THE SELECTION, PURCHASE AND INSTALLATION INCLUDING LIFE SAFETY OF THIS PRODUCT BASED ON THIS PRODUCT APPROVAL PROVIDED HE/SHE DOES NOT DEVIATE FROM THE CONDITIONS DETAILED ON THIS DOCUMENT. CONSTRUCTION SAFETY AT SITE IS THE CONTRACTOR'S RESPONSIBILITY.

    (c) THIS PRODUCT APPROVAL DOCUMENT WILL BE CONSIDERED INVALID IF MODIFIED.

    (d) SITE SPECIFIC PROJECTS SHALL BE PREPARED BY A FLORIDA REGISTERED ENGINEER OR ARCHITECT WHICH WILL BECOME THE PROFESSIONAL OF RECORD (P.O.R.) FOR THE PROJECT AND WHO WILL BE RESPONSIBLE FOR THE PROPER USE OF THE P.A.D. PROFESSIONAL OF RECORD, ACTING AS DELEGATED ENGINEER TO THE P.A.D. ENGINEER, SHALL SUBMIT TO THIS LATTER THE SITE SPECIFIC DRAWINGS FOR REVIEW.

    (e) ORIGINAL P.A.D. SHALL BEAR THE DATE AND ORIGINAL SEAL AND SIGNATURE OF THE PROFESSIONAL ENGINEER THAT PREPARED IT.

18. SKYLIGHT MANUFACTURER'S LABEL SHALL BE PLACED ON A READILY VISIBLE LOCATION. ONE LABEL SHALL BE PLACED FOR EVERY UNIT, LABEL SHALL READ AS FOLLOWS:
    OLDCASTLE BUILDINGENVELOPE
    TERRELL, TX
    MIAMI-DADE COUNTY PRODUCT CONTROL APPROVED.

PRODUCT RENEWED
as complying with the Florida Building Code
Acceptance No 12-0924.01
Expiration Date 09/24/2013
By
Miami Dade Product Control

FLORIDA BUILDING CODE (High Velocity Hurricane Zone)

STORMMAX HURRICANE RESISTANT SKYLIGHT SMALL MISSILE

Oldcastle BuildingEnvelope™
803 Airport Rd - Terrell, TX 75160
www.OldcastleBE.com - Phone 800-669-4567

REV. No	DESCRIPTION	DATE
1	CLA 11-452	12/01/11
2	REV. No	3
3		

DRAWN BY: A.G.
12/01/11 DATE
11-136 DRAWING No
SHEET 1 OF 10

©2011 TILTECO, INC

TILTECO INC.
TILLIT TESTING & ENGINEERING COMPANY
6355 N.W. 36th. St. Ste. 205, VIRGINIA GARDENS, FL 33166
Phone : (305)871-4330 . Fax : (305)871-1511
e-mail: tilteco@aol.com
EB-0006719
WALTER A. TILLIT JR. P.E.
FLORIDA Lic. # 44167

WALTER A. TILLIT JR. LICENSE NO. 44167 STATE OF FLORIDA PROFESSIONAL ENGINEER
P.E. SEAL/SIGNATURE/DATE

PRODUCT REVISED
as complying with the Florida Building Code
Acceptance No 11-0923.02
Expiration Date 09/24/2012
By
Miami Dade Product Control

MIAMI DADE COUNTY

BILL OF MATERIALS: FRAMING: ALUMINUM EXTRUSIONS

ITEM #	DESCRIPTION	PART #	MATERIAL
①	END WALL SILL	BMS 4061	6063-T6 ALUMINUM
②	PURLIN	BMS 4062	6063-T6 ALUMINUM
③	RAFTER, RIDGE RAFTER & UPRIGHT	BMS 4057	6063-T6 ALUMINUM
④	SILL	BMS 3410	6063-T6 ALUMINUM
⑤	RIDGE RAFTER ADAPTER	BMS 4065	6063-T6 ALUMINUM
⑥	RAFTER & PURLIN PRESSURE PLATE	BMS 4202	6063-T6 ALUMINUM
⑦	RIDGE RAFTER CAP	BMS 4007	6063-T6 ALUMINUM
⑧	RIDGER RAFTER PRESSURE PLATE	BMS 4005	6063-T6 ALUMINUM
⑨	POCKET FILLER	BMS 3594	6063-T6 ALUMINUM
⑩	PURLIN SOFFIT CAP	BMS 3905	6063-T5 ALUMINUM
⑩A	RAFTER CAP	BMS 2605	6063-T5 ALUMINUM
⑪	PURLIN CAP	BMS 4009	6063-T6 ALUMINUM
⑫	END WALL TOP SASH	BMS 4060	6063-T6 ALUMINUM
⑬	CHANNEL	BMS 3091	6063-T6 ALUMINUM
⑭	ALUMINUM ANGLE 3x2x1/4	–	6063-T6 ALUMINUM
⑮	ALUMINUM ANGLE 2x1 1/2x1/4	–	6063-T6 ALUMINUM
⑯	ALUMINUM ANGLE 3x3x1/4	–	6061-T6 ALUMINUM
⑰	ALUMINUM ANGLE 2x2x1/4	–	6061-T6 ALUMINUM
⑱	ALUMINUM ANGLE 5x3x3/8	–	6061-T6 ALUMINUM
⑲	ALUMINUM ANGLE 4x3x3/8	–	6061-T6 ALUMINUM
⑳	ALUMINUM ANGLE 3x3x3/8	–	6061-T6 ALUMINUM
㉑	COMPRESSOR	BMS 3009	VINYL
㉒	UPRIGHT ANCHOR	–	6061-T6 ALUMINUM

BILL OF MATERIALS: STRUCTURAL & NON STRUCTURAL SEALANTS

ITEM #	DESCRIPTION	MATERIAL
Ⓑ	DOW CORNING 795 STRUCTURAL GRAY	SILICONE
Ⓒ	SEALANT Ⓑ W/ BACKER ROD	SILICONE
Ⓔ	DOW CORNING 795 STRUCTURAL BLACK	SILICONE
Ⓕ	DOW CORNING 995 STRUCTURAL BLACK	SILICONE

DOW CORNING GUIDELINES

SHELF LIFE OF THE FOLLOWING PRODUCTS ARE AS FOLLOWS:

DOW 795 ——— USE BY DATE
P5200 ADHESION PROMOTER —— USE BY DATE
DOW 995 ——— USE BY DATE

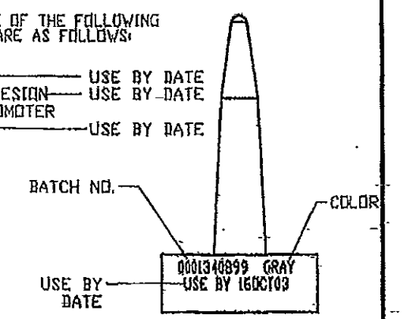

BILL OF MATERIALS: ACCESORIES TO FRAME COMPONENTS

ITEM #	DESCRIPTION	PART #	MATERIAL
①	1/16" (MIN.) KOROLATH ISOLATOR & KOROLATH SHIMS AS REQ'D, FULL BEARING	–	BLACK DENSE PLASTIC
③	1/8" CONTINUOUS ALUMINUM CLOSURE ANGLE	–	6063-T5
④	FORMED ALUM FLASHING, LAP 3" MIN. & BED SEAL W/Ⓑ (EXTERIOR), 0.062" THICK (MIN.)	–	3105-H14
⑤	FORMED 0.040" (MIN.) ALUM FLASHING, (MISCELLANEOUS EXTERIOR),	–	3105-H14
⑨	1/4" DIAMETER WEEP HOLES	–	–
⑩	OPEN CELL RETICULATED FOAM BAFFLE	–	–

BILL OF MATERIALS: GLASS

ITEM #	DESCRIPTION	MATERIAL
㊶	9/16" (NOMINAL) LAMINATED GLASS CONSISTING OF 1/4" HEAT STRENGTHENED GLASS + .090" PVB INTERLAYER + 1/4" HEAT STRENGTHENED GLASS, THE PVB INTERLAYER IS EITHER SOLUTIA SAFLEX PVB OR DUPONT BUTACITE PVB.	GLASS

BILL OF MATERIALS: GASKET, GLAZING BLOCKS & BACKER RODS

ITEM #	DESCRIPTION	PART #	MATERIAL	DETAIL
㉑	SILICONE SETTING BLOCK (80 DUR ± 5) LOCATE 9" MAX. EACH SIDE OF RAFTER CENTERLINE	BMS 3997	SILICONE	
㉓	EPDM EDGE BLOCK (60 DUR ± 5), LOCATE 12" MAX. ABOVE & BELOW CENTERLINE OF PURLIN & 12" MAX. ABOVE SILL.	BMS 3998	EPDM	4.0000 / 1.2500
㉔	GASKET DUR 60 ± 5	BMS 3950	EPDM RUBBER	0.5226 / 0.385
㉗	3/8" OPEN CELL FOAM BACKER ROD	–	OPEN CELL POLYURETHANE	

PRODUCT RENEWED
as complying with the Florida Building Code
Acceptance No 12-0924.01
Expiration Date 09/24/2013
By
Miami Dade Product Control

FASTENER ABBREVIATIONS

SIZE	LENGTH	HEAD TYPE (UNDERLINED)		MATERIAL
#10		FLAT	A POINT SMS	
#14		PAN	B POINT TAPPING	CAD PLATED STEEL
#17		HEX	AB POINT	STAINLESS STEEL
3/8"		TRUSS	CAP SCREW (PARTIAL THREAD)	GRADE 5
1/2"		ROUND	MACHINE SCREW (FULL THREAD)	GRADE 2
		SOCKET	LAG BOLT	ZINC PLATED STEEL
			TEKS SCREW	
			FLAT WASHER	
			LOCK WASHER	
			HEX NUT	
			RIVNUT	
			LOCK NUT	

EXAMPLE: #10 X 3/4" PAS = PAN HEAD, A POINT, SHEET METAL SCREW, STAINLESS STEEL.

NOTE: ALL HEX HEAD GLAZING CAP FASTENERS TO HAVE STAINLESS STEEL/EPDM FLAT WASHERS. ALL EXPOSED FASTENERS TO BE COLORED TO MATCH.

FLORIDA BUILDING CODE (High Velocity Hurricane Zone)

DRAWN BY: A.G.
12/01/11 DATE
11-136 DRAWING No
SHEET 2 OF 10

STORMMAX HURRICANE RESISTANT SKYLIGHT SMALL MISSILE

Oldcastle BuildingEnvelope™
303 Airport Rd - Terrell, TX 75160
www.OldcastleBE.com - Phone 800-883-4567

REV. No	DESCRIPTION	DATE	DWN
1	PER FBC-HVHZ	02/09/12	
2			

©2011 TILLETT, INC.

TILLETT TESTING & ENGINEERING COMPANY
6555 N.W. 36th. St., Ste. 305, Virginia Gardens, FL 33166
Phone : (305)871-1530 , Fax : (305)871-1531
e-mail: tillett@aol.com
EB-0005719
WALTER A. TILLIT Jr., P.E.
FLORIDA Lic. # 44167

WALTER A. TILLIT JR. LICENSE NO. 44167 STATE OF FLORIDA PROFESSIONAL ENGINEER
SIGNATURE / DATE
P.E. SEAL

PRODUCT REVISED
as complying with the Florida Building Code
Acceptance No 11-0923.02
Expiration Date 09/24/2013
By
Miami Dade Product Control

MIAMI DADE COUNTY

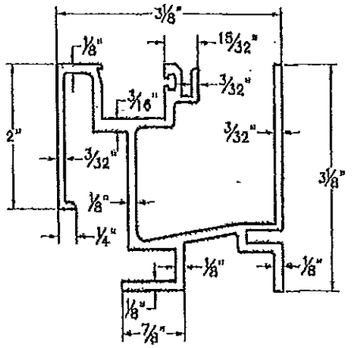

① BMS 4061 END WALL SILL

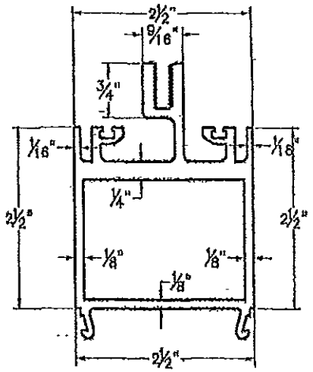

② BMS 4062 PURLIN

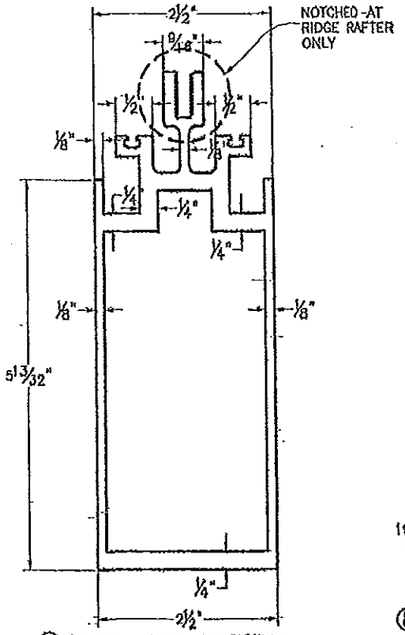

③ BMS 4057 RAFTER, RIDGE RAFTER & UPRIGHT

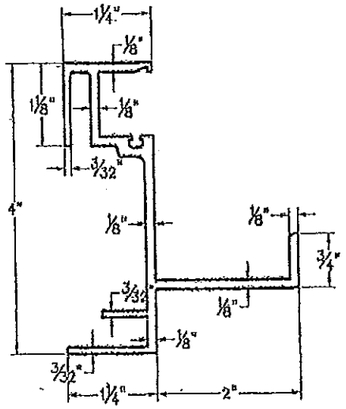

④ BMS 3410 SILL

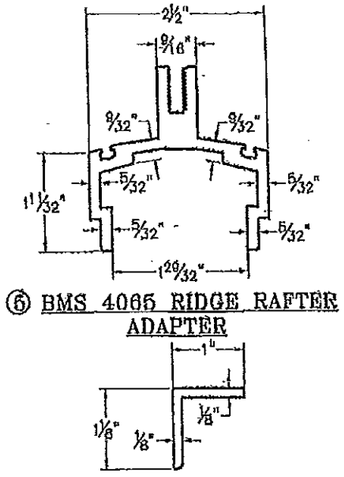

⑤ BMS 4065 RIDGE RAFTER ADAPTER

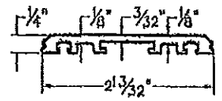

⑥ BMS 4202 RAFTER & PURLIN PRESSURE PLATE

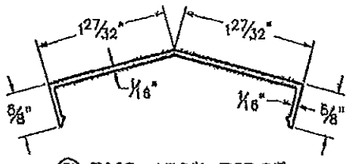

⑦ BMS 4007 RIDGE RAFTER CAP

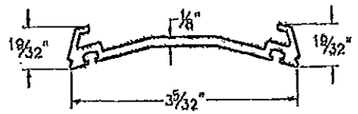

⑧ BMS 4005 RIDGE RAFTER PRESSURE PLATE

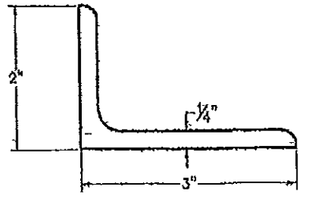

⑭ L 3"x2"x¼" ALUMINUM ANGLE

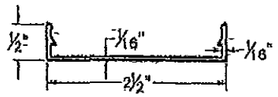

⑩ BMS 3905 PURLIN SOFFIT CAP

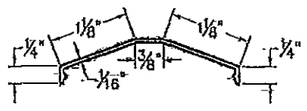

⑪ BMS 4009 PURLIN CAP

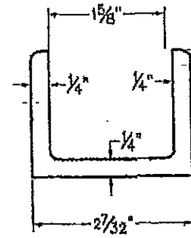

⑬ BMS 3091 CHANNEL

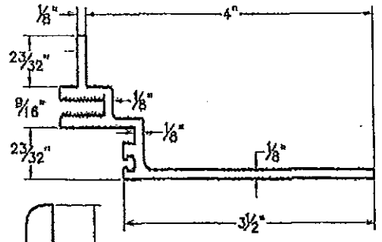

⑫ BMS 4060 END WALL TOP SASH

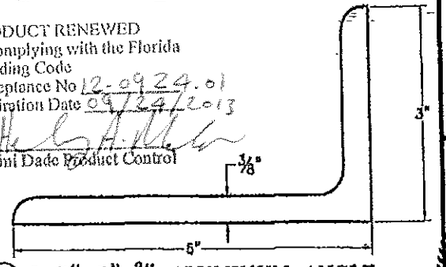

⑱ L 5"x3"x⅜" ALUMINUM ANGLE

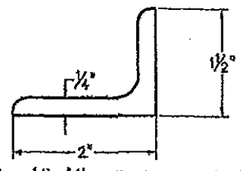

⑮ L 2"x1½"x¼" ALUMINUM ANGLE

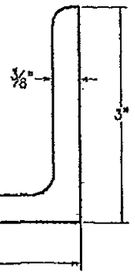

⑳ L 3"x3"x⅜" ALUMINUM ANGLE

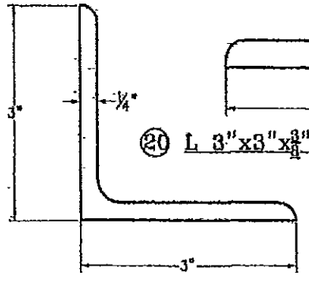

⑯ L 3"x3"x¼" ALUMINUM ANGLE

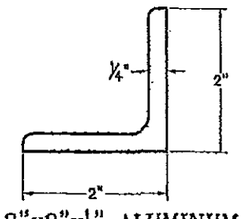

⑰ L 2"x2"x¼" ALUMINUM ANGLE

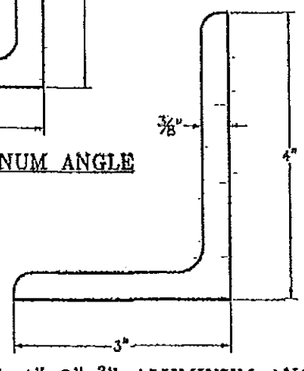

⑲ L 4"x3"x⅜" ALUMINUM ANGLE

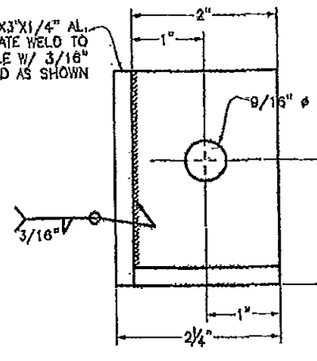

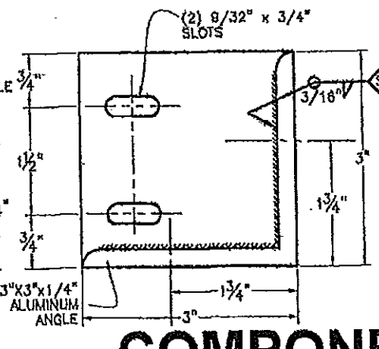

㉒ UPRIGHT ANCHOR

COMPONENTS

PRODUCT RENEWED
as complying with the Florida Building Code
Acceptance No 12-0924.01
Expiration Date 09/24/2013
By Miami Dade Product Control

FLORIDA BUILDING CODE (High Velocity Hurricane Zone)

STORMMAX HURRICANE RESISTANT SKYLIGHT SMALL MISSILE

DRAWN BY: A.G.
12/01/11 DATE
11-136 DRAWING No
SHEET 2A OF 10

Oldcastle BuildingEnvelope™
808 Airport Rd - Terrell, TX 75160
www.OldcastleBE.com - Phone 800-869-4557

REV. No.	DESCRIPTION	DATE	REV. No.	DESCRIPTION	DATE
1	ADD 11-0923.02	12/05/12	3		
2			4		

TILLEC INC.
TILLIT TESTING & ENGINEERING COMPANY
2525 NW 39th St., Suite 205, Miami Gardens, FL 33142
(305)871-2536 - Fax: (305)871-2531
e-mail: info@tillitco.com
EB-0005719
WALTER A. TILLIT Jr., P.E.
FLORIDA Lic. # 44167

©2011 TILTECO, INC

WALTER A. TILLIT JR. LICENSE No. 44167 STATE OF FLORIDA PROFESSIONAL ENGINEER
P.E. SEAL/SIGNATURE/DATE

PRODUCT REVISED
as complying with the Florida Building Code
Acceptance No 11-0923.02
Expiration Date 09/24/2012
By Miami Dade Product Control

MIAMI DADE COUNTY

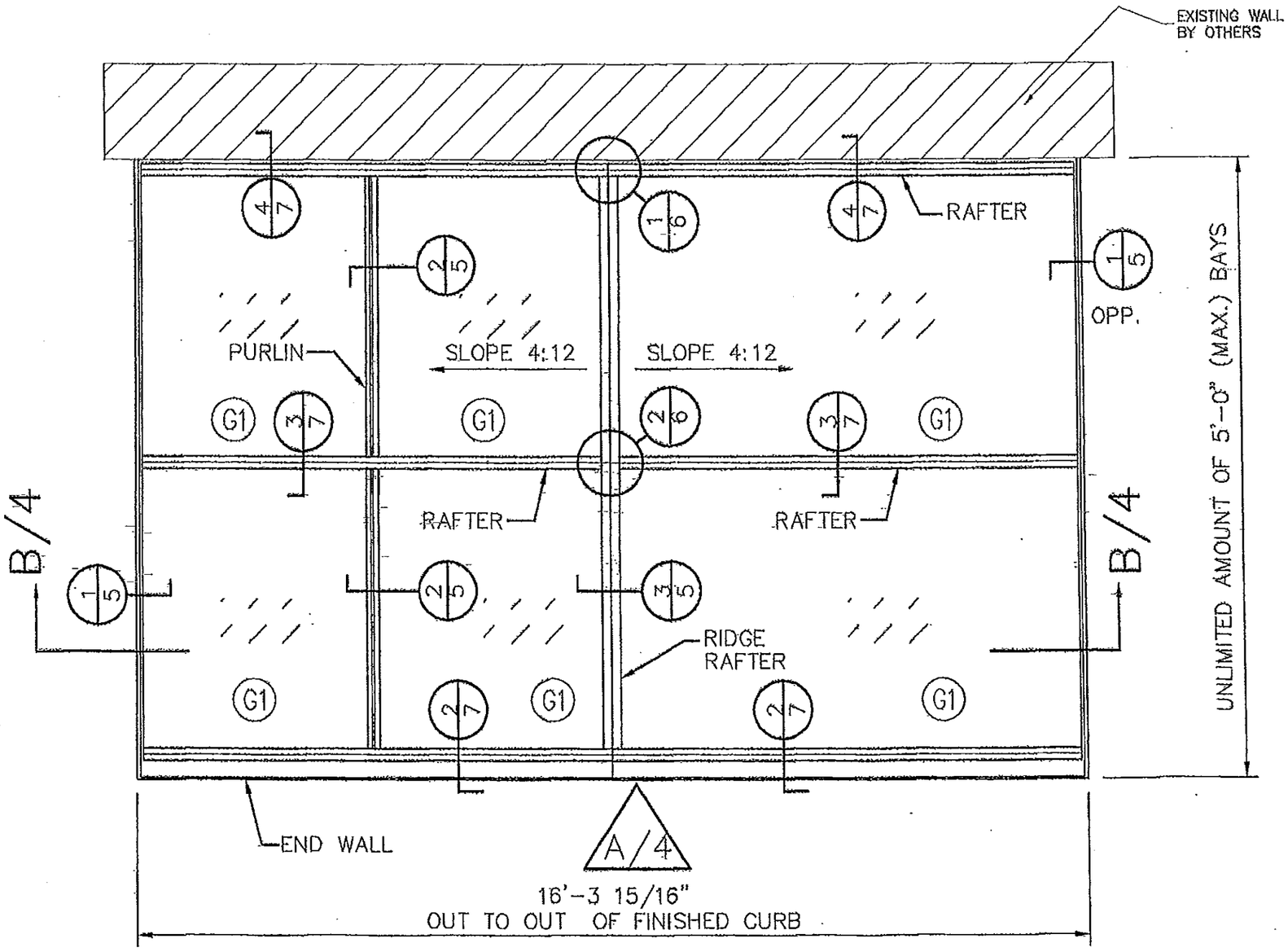

PLAN VIEW OF SKYLIGHT

SCALE: 1/2" = 1'-0"

PRODUCT RENEWED
as complying with the Florida
Building Code
Acceptance No 12-0924.01
Expiration Date 09/24/2013
By [signature]
Miami Dade Product Control

FLORIDA BUILDING CODE (High Velocity Hurricane Zone)

STORMMAX HURRICANE RESISTANT
SKYLIGHT SMALL MISSILE

Oldcastle BuildingEnvelope™
303 Airport Rd - Terrell, TX 75160
www.OldcastleBE.com - Phone 800-869-4567

DRAWN BY: A.C.
12/01/11 DATE
11-136 DRAWING No
SHEET 3 OF 10

©2011 TILTECO, INC

TILTECO INC.
TILLIT TESTING & ENGINEERING COMPANY
6355 N.W. 36th St., Ste. 305, MIAMI, CARDENAS, FL 33166
Phone: (305)871-1530 . Fax: (305)871-1531
e-mail: tilteco@aol.com
EB-0006719
WALTER A. TILLIT Jr. P.E.
FLORIDA Lic. # 44167

WALTER A. TILLIT JR.
LICENSE
No. 44167
STATE OF FLORIDA
PROFESSIONAL ENGINEER
12/1/11
P.E. SEAL/SIGNATURE/DATE

PRODUCT REVISED
as complying with the Florida
Building Code
Acceptance No 11-0923.02
Expiration Date 09/24/2012
By [signature]
Miami Dade Product Control

MIAMI DADE COUNTY

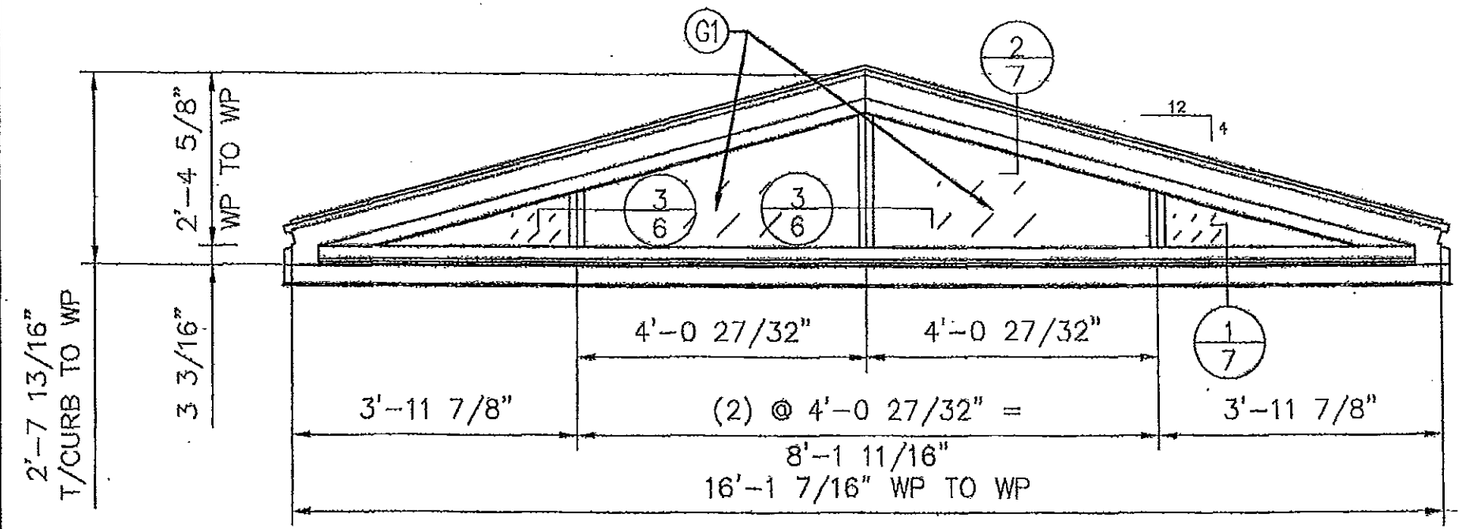

ELEVATION A OF SKYLIGHT

SCALE: 1/2" = 1'-0"

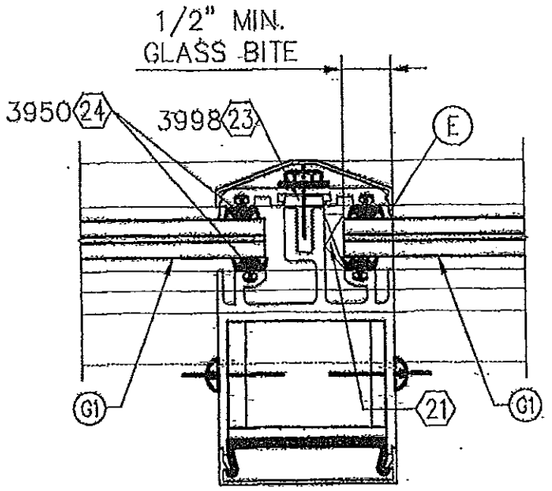

GLAZING DETAIL

SCALE: 1/2" = 1'-0"

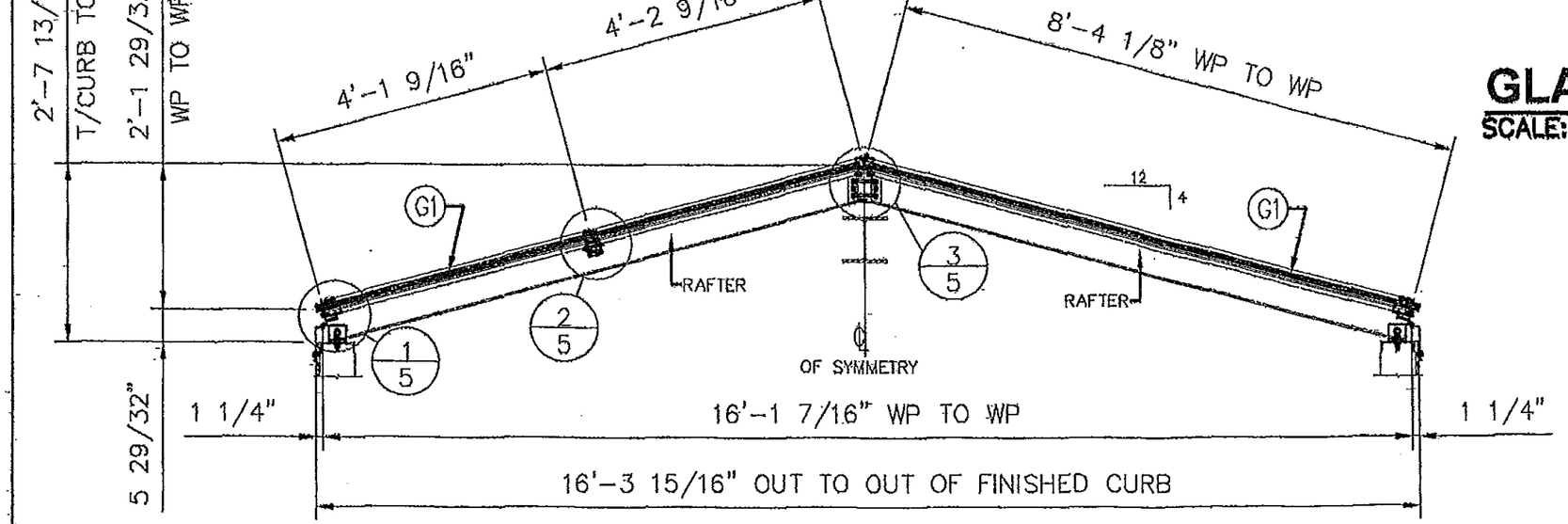

SECTION 'B-B' THRU SKYLIGHT

SCALE: 1/2" = 1'-0"

PRODUCT RENEWED
as complying with the Florida
Building Code
Acceptance No 12-0924.01
Expiration Date 09/24/2013
By [signature]
Miami Dade Product Control

FLORIDA BUILDING CODE (High Velocity Hurricane Zone)

STORMMAX HURRICANE RESISTANT SKYLIGHT SMALL MISSILE

Oldcastle BuildingEnvelope™
803 Airport Rd - Terrell, TX 75160
www.OldcastleBE.com - Phone 800-889-4567

DRAWN BY: A.G.
12/01/11 DATE
11-136 DRAWING No.
SHEET 4 OF 10

©2011 TILTECO, INC

TILTECO INC.
TILLIT TESTING & ENGINEERING COMPANY
5355 N.W. 36th St., Ste. 305, VIRGINIA GARDENS, FL 33166
Phone: (305)871-1530 - Fax: (305)871-1537
e-mail: tilteco@aol.com
EB-0006719
WALTER A. TILLIT Jr. P.E.
FLORIDA Lic. # 44167

WALTER A. TILLIT JR. LICENSE No. 44167 STATE OF FLORIDA PROFESSIONAL ENGINEER
P.E. SEAL/SIGNATURE/DATE

PRODUCT REVISED
as complying with the Florida
Building Code
Acceptance No 11-0923.02
Expiration Date 09/24/2012
By [signature]
Miami Dade Product Control

MIAMI DADE COUNTY

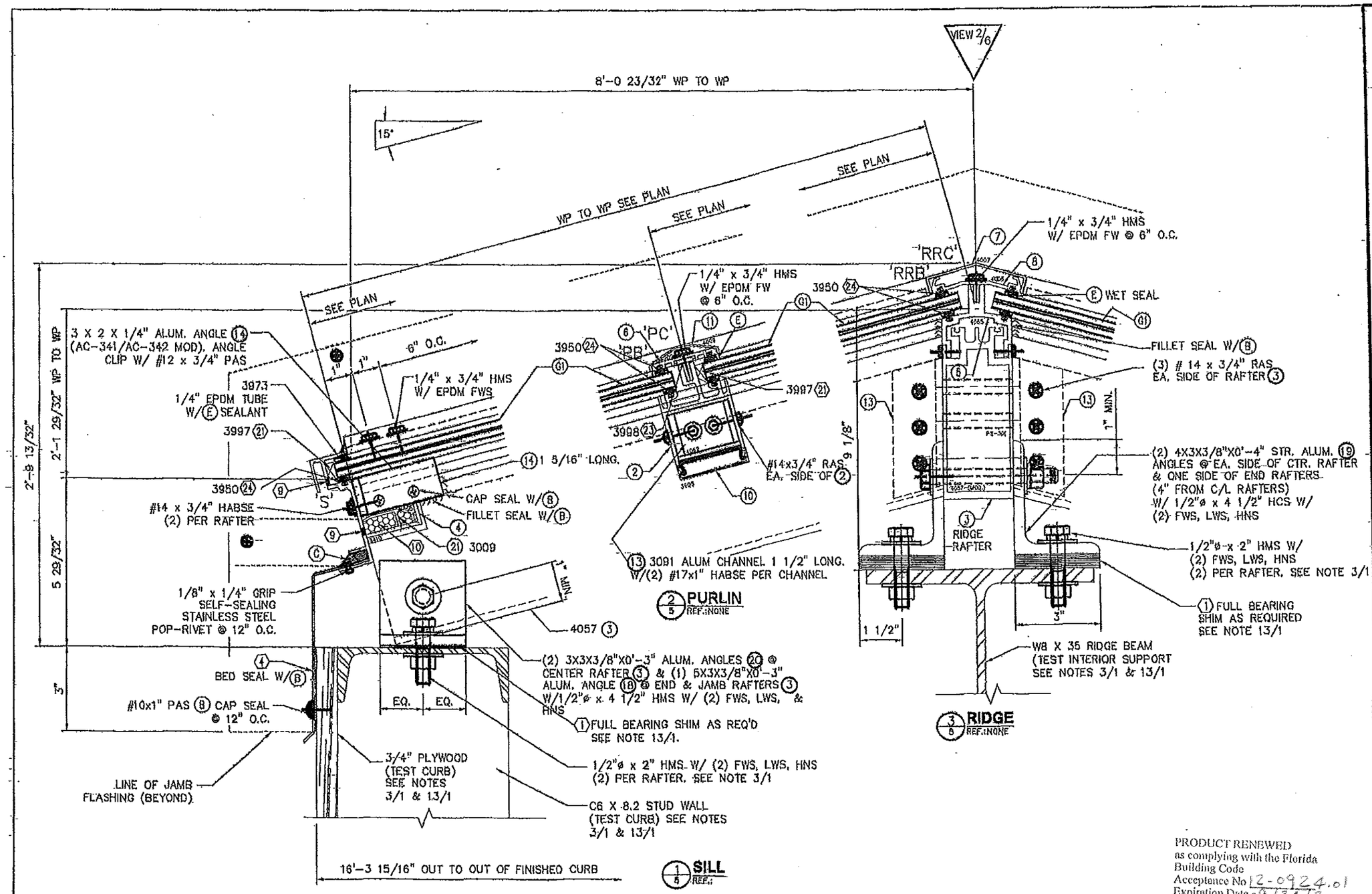

INSTALLER NOTE:
WET SEAL ALL LITES W/(E).

PRODUCT RENEWED
as complying with the Florida Building Code
Acceptance No 12-0924.01
Expiration Date 09/24/2013
By [signature]
Miami Dade Product Control

FLORIDA BUILDING CODE (High Velocity Hurricane Zone)

STORMMAX HURRICANE RESISTANT SKYLIGHT SMALL MISSILE

Oldcastle BuildingEnvelope™
803 Airport Rd - Terrell, TX 75160
www.OldcastleBE.com - Phone 800-869-4567

DRAWN BY: A.G.
12/01/11 DATE
11-136 DRAWING No
SHEET 5 OF 10

©2011 TILTECO, INC

TILTECO INC.
TILLIT TESTING & ENGINEERING COMPANY
6355 N.W. 55th St., Ste. 305, VIRGINIA GARDENS, FL 33166
Phone: (305)871-1530 . Fax: (305)871-1531
e-mail: tiltecoinc@aol.com
EB-0006719
WALTER A. TILLIT Jr. P.E.
FLORIDA Lic. # 44167

WALTER A. TILLIT JR. LICENSE No. 44167 STATE OF FLORIDA PROFESSIONAL ENGINEER
P.E. SEAL/SIGNATURE/DATE

PRODUCT REVISED
as complying with the Florida Building Code
Acceptance No 11-0923.02
Expiration Date 09/24/2012
By [signature]
Miami Dade Product Control

MIAMI DADE COUNTY

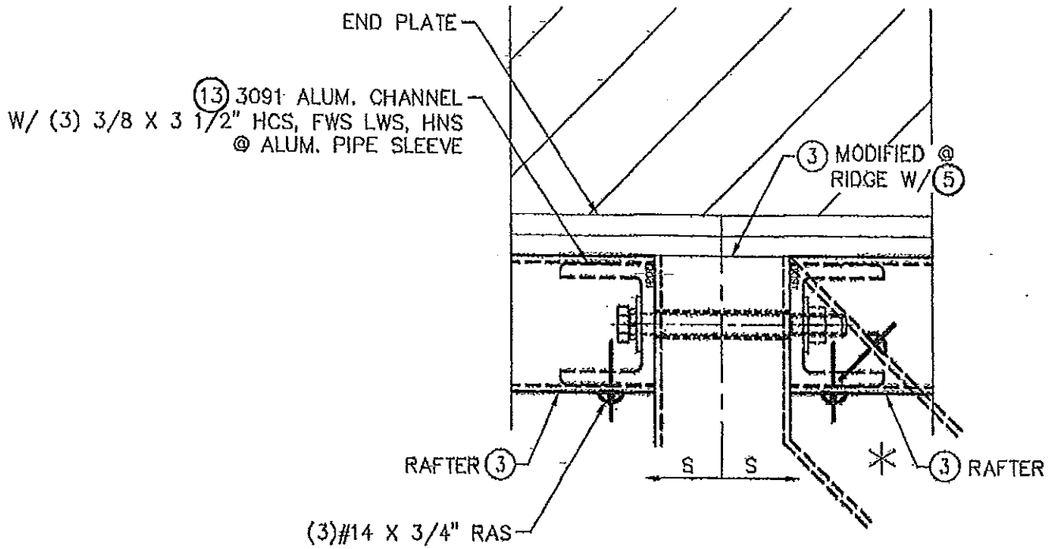

1/6 **RIDGE @ JAMB RAFTERS**
REF.:NONE

* HIP RAFTER @ JACK RAFTER W/SHEAR BLOCK – SIMILIAR. SEE NOTE 3/1

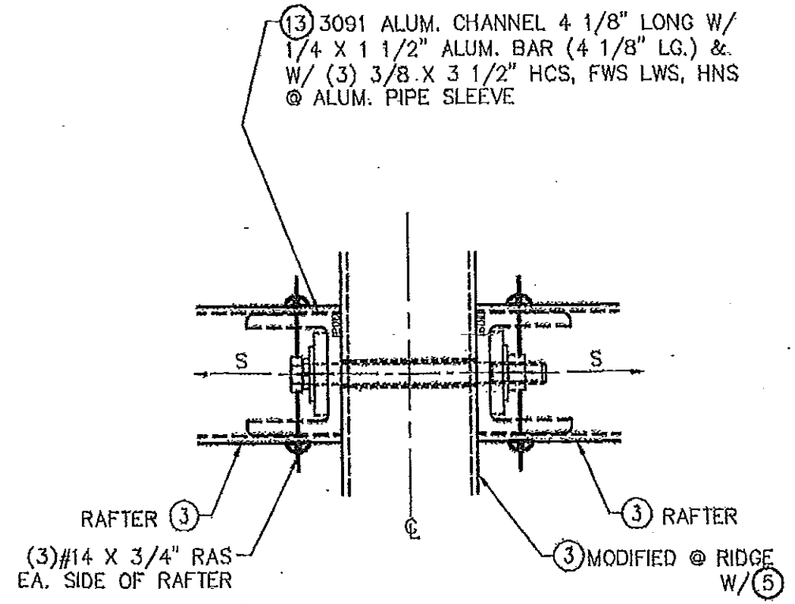

2/6 **RIDGE @ TYPICAL RAFTERS**
REF.:NONE

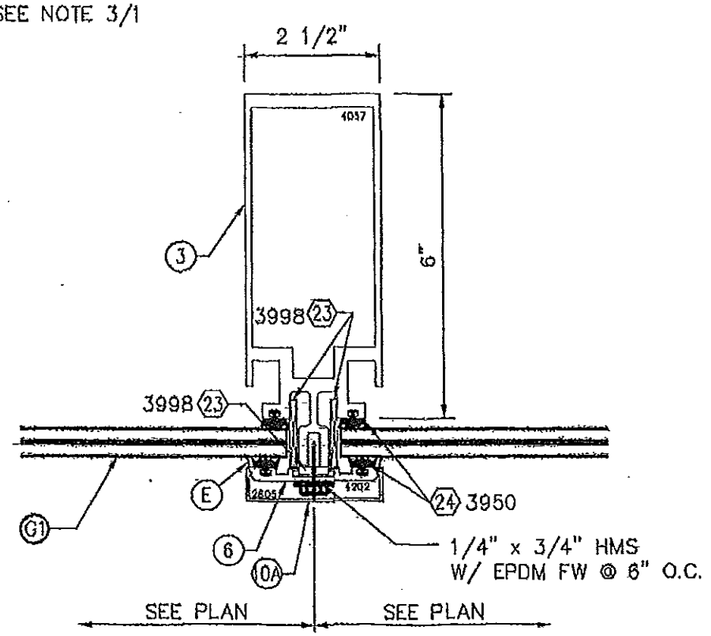

3/6 **END WALL UPRIGHT**
REF.:NONE

PRODUCT RENEWED
as complying with the Florida Building Code
Acceptance No 12-0924.01
Expiration Date 09/24/2013
By [signature]
Miami Dade Product Control

FLORIDA BUILDING CODE (High Velocity Hurricane Zone)

STORMMAX HURRICANE RESISTANT SKYLIGHT SMALL MISSILE

Oldcastle BuildingEnvelope™
803 Airport Rd - Terrell, TX 75160
www.OldcastleBE.com - Phone 800-869-4567

DRAWN BY: A.G.
12/01/11 DATE
11-136 DRAWING No
SHEET 6 OF 10

TILLIT TESTING & ENGINEERING COMPANY
TILLECO INC.
WALTER A. TILLIT Jr. P.E.
FLORIDA Lic. # 44167

WALTER A. TILLIT JR. LICENSE No. 44167 STATE OF FLORIDA PROFESSIONAL ENGINEER
P.E. SEAL SIGNATURE DATE

PRODUCT REVISED
as complying with the Florida Building Code
Acceptance No 11-0923.02
Expiration Date 09/24/2012
By [signature]
Miami Dade Product Control

MIAMI DADE COUNTY

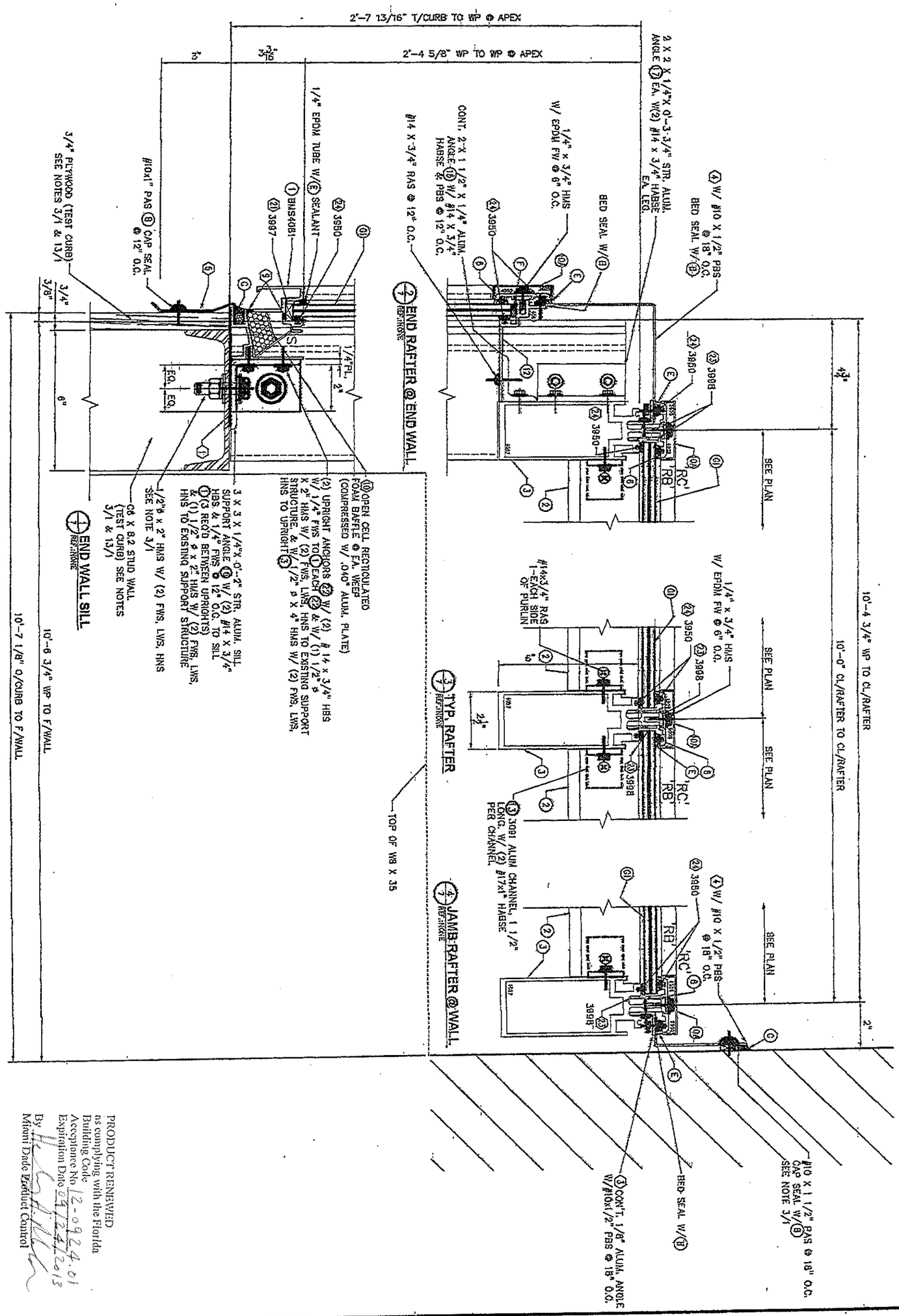

PRODUCT RENEWED
as complying with the Florida
Building Code
Acceptance No 12-0924.01
Expiration Date 09/24/2013
By [signature]
Miami Dade Product Control

PRODUCT REVISED
as complying with the Florida
Building Code
Acceptance No 11-0923.02
Expiration Date 09/24/2012
By [signature]
Miami Dade Product Control

MIAMI DADE COUNTY

WALTER A. TILLIT JR.
LICENSE
No. 44167
STATE OF FLORIDA
PROFESSIONAL ENGINEER

P.E. SEAL SIGNATURE/DATE

FLORIDA BUILDING CODE (High Velocity Hurricane Zone)

©2011 TILTECO, INC

TILTECO INC.
TILLIT TESTING & ENGINEERING COMPANY
6355 N.W. 36th. St., Ste. 305, VIRGINIA GARDENS, FL 33166
Phone : (305)871-1530 . Fax : (305)871-1531
e-mail: tilteco@aol.com
EB-0005719
WALTER A. TILLIT Jr. P.E.
FLORIDA Lic. # 44167

STORMMAX HURRICANE RESISTANT SKYLIGHT SMALL MISSILE

Oldcastle BuildingEnvelope™
803 Airport Rd - Terrell, TX 75160
www.OldcastleBE.com - Phone 800-869-4567

REV. No.	DESCRIPTION	DATE	REV. No.	DESCRIPTION	DATE
1	OLD 10-002	12/01/11	3		
2			4		

DRAWN BY: A.G.
12/01/11 DATE
11-136 DRAWING No
SHEET 7 OF 10

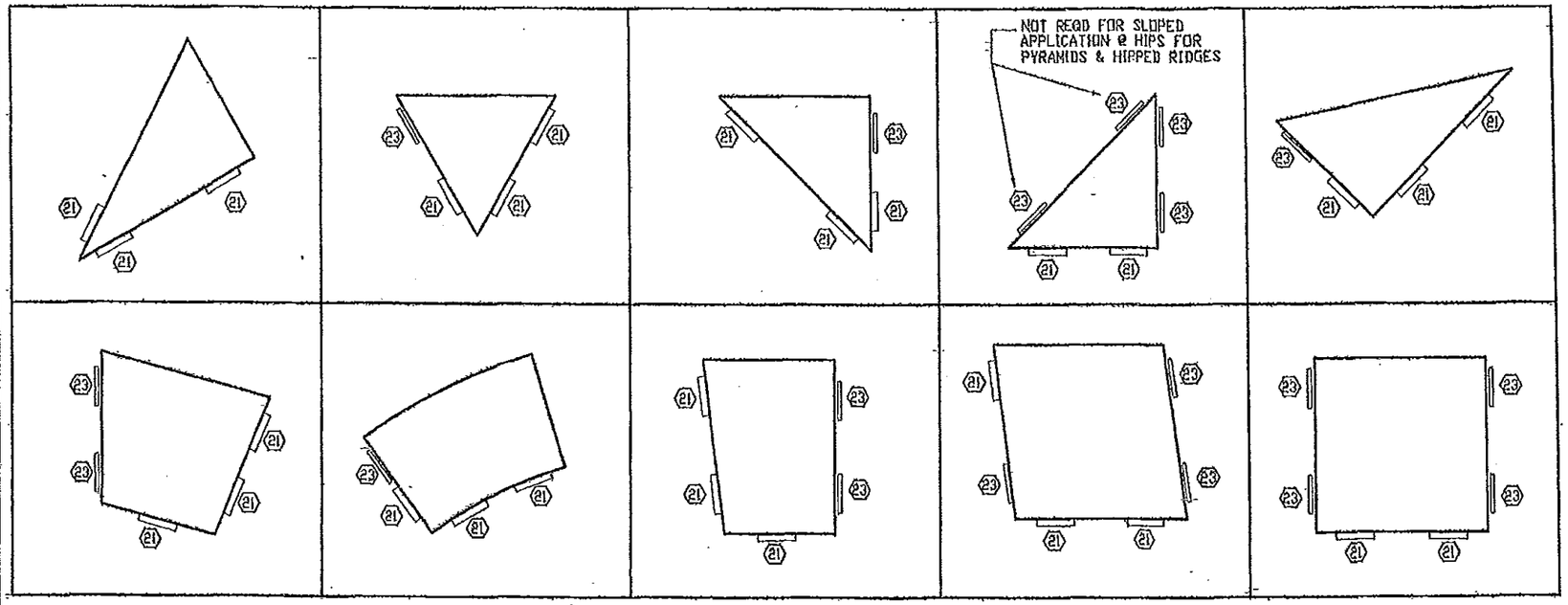

SETTING BLOCK NOTES:

1. NO BLOCKS SHALL BE LESS THAN 6" IN LENGTH
2. SETTING BLOCKS SHALL BE POSITIONED WITH BEVELED EDGE DOWN REFER TO APPLICABLE DETAIL
3. FOR ALL GLASS TYPES REGARDLESS OF APPLICATION, THE SETTING BLOCK MUST SUPPORT A MIN. OF ONE HALF THE THICKNESS OF THE OUTBOARD LITE

PROPER GLASS BLOCKING TECHNIQUES:

PLEASE FOLLOW THE PROPER BLOCKING TECHNIQUES FOR SETTING BLOCKS AS SHOWN HERE. ALL LITES ARE SHOWN IN TRUE ELEVATION AND DO NOT FLOAT IN THE OPENING, THESE BLOCKING TECHNIQUES DO NOT APPLY TO ENTRANCE DOORS, OPERABLE WINDOWS OR VENTS.

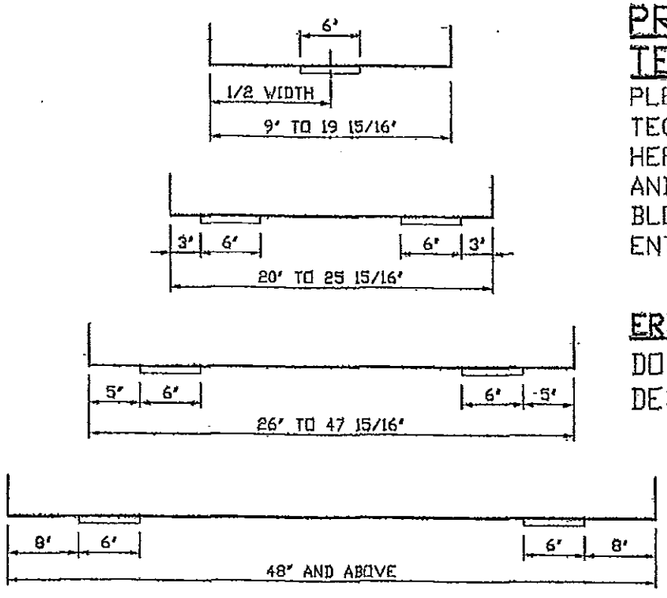

SETTING BLOCK LOCATIONS

ERECTOR NOTE:

DO NOT WALK ON GLASS. GLASS IS NOT DESIGNED TO SUPPORT CONCENTRATED LOADS

LEGEND

21 = SETTING BLOCK

23 = EDGE BLOCK

PRODUCT RENEWED
as complying with the Florida Building Code
Acceptance No 12-0924.01
Expiration Date 09/24/2013
By
Miami Dade Product Control

FLORIDA BUILDING CODE (High Velocity Hurricane Zone)

STORMMAX HURRICANE RESISTANT SKYLIGHT SMALL MISSILE

Oldcastle BuildingEnvelope™
303 Airport Rd - Terrell, TX 75160
www.OldcastleBE.com - Phone 800-669-4567

DRAWN BY: A.G.
12/01/11 DATE
11-136 DRAWING No.
SHEET 8 OF 10

REV. No.	DESCRIPTION	DATE
1	ADD 24"x60"	12/29/11
2		

TILLIT TESTING & ENGINEERING COMPANY
2263 NW 22nd St., Ste 204, Miramar Gardens, FL 33142
Phone: (305)971-1530 , Fax: (305)971-1537
e-mail: tillitcon@aol.com
WALTER A. TILLIT Jr. P.E.
FLORIDA Lic. # 44167
FB-0005719

©2011 TILLIT TESTING & ENGINEERING, INC

WALTER A. TILLIT JR. LICENSE No. 44167 STATE OF FLORIDA PROFESSIONAL ENGINEER
P.E. SIGNATURE/DATE

PRODUCT REVISED
as complying with the Florida Building Code
Acceptance No 11-0923.02
Expiration Date 09/24/2012
By
Miami Dade Product Control

MIAMI DADE COUNTY

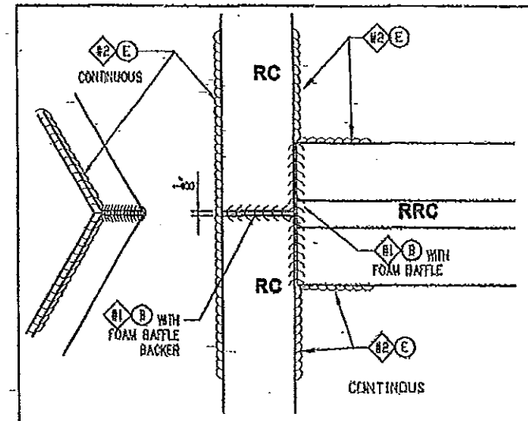

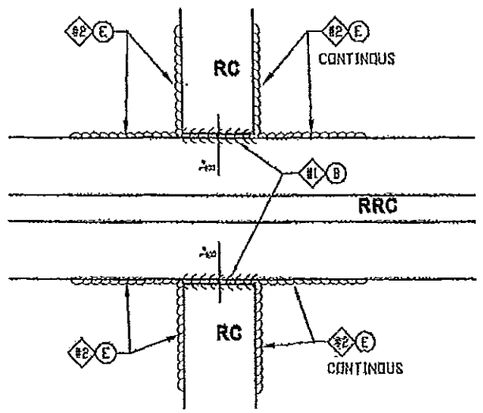

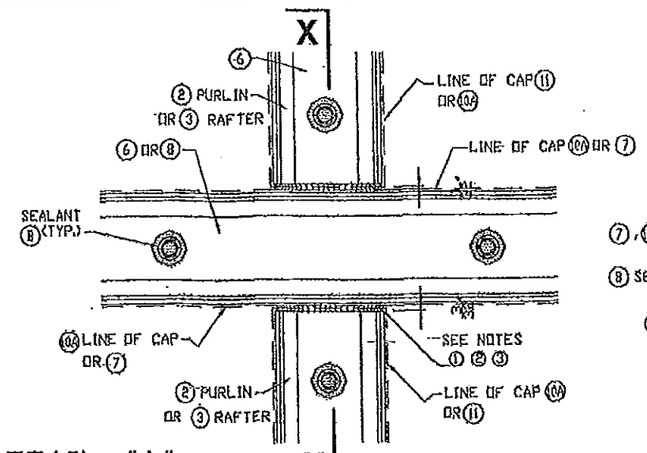

DETAIL "A" TYPICAL SEALING AT INTERSECTION OF PRESSURE PLATES 6 OR 8

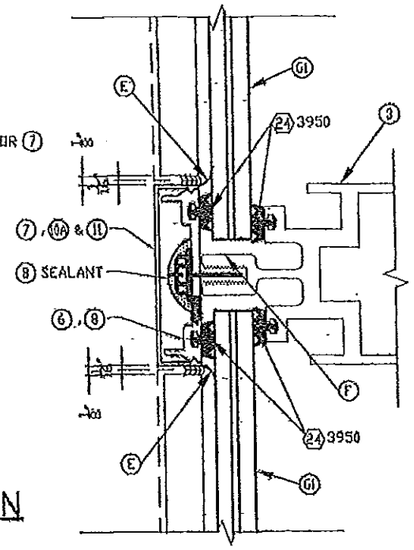

SECTION X-X THRU PRESSURE PLATES & CAPS

SEALING PROCEDURES FOR DETAIL "B"

ALL METAL TO METAL CONNECTIONS AND METAL TO GLASS JOINTS TO BE CLEANED WITH DOW P5200 ADHESION PROMOTER OR OTHER SUITABLE CLEANER.

#1 CLEAN, PRIME AND INSTALL CAPS AND PLACE A BEAD OF (B) SEALANT BETWEEN CAPS AS SHOWN.

#2 CLEAN AND PRIME CAPS AND AT CAP INTERSECTIONS AFTER INSTALLING CAPS AND PLACE A HEEL BEAD OF (E) SEALANT BETWEEN GLASS AND CAPS AS SHOWN.

#3 GASKETS ON ALL FRAMING TO BE FIELD INSTALLED & COMPRESSED APPROX. 1/8" PER FOOT

#4 BUTT SEAL ALL GASKET INTERSECTIONS W/ (E) SEALANT

SEALING PROCEDURES FOR DETAIL "A"

1. ALWAYS CLEAN ENDS OF GLAZING CAPS WITH IPA OR OTHER SUITABLE CLEANER PRIOR TO INSTALLING.
2. PLACE A BEAD OF (B) SEALANT AT PRESSURE PLATE INTERSECTIONS AS SHOWN.
3. FASTEN AS INSTRUCTED, CLEAN HEAD OF FASTENER AND SURFACE OF GLAZING CAP AROUND FASTENER, CAP SEAL WITH (B) SEALANT.
4. INSTALL CAPS AT THE PRESSURE PLATES THAT RUN THROUGH. PLACE A BEAD OF SEALANT BETWEEN CAPS AND INTERSECTING PRESSURE PLATES AS SHOWN IN THE DIAGRAM.
5. AFTER INSTALLING PRESSURE PLATES AND CAPS CENTER THE REMAINING INTERSECTING CAPS IN OPENINGS. BRIDGE SEAL CAPS AS REQUIRED.

END RAFTER AND RIDGE CAP DETAIL

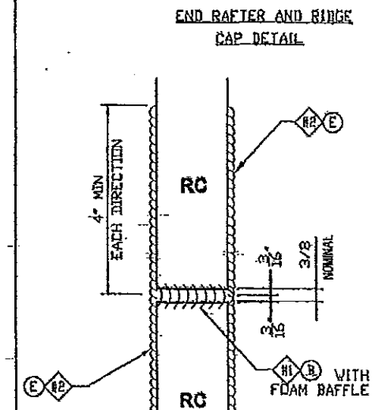

RAFTER CAPS AT EXPANSION JOINT

END RAFTER AND RIDGE CAP DETAIL

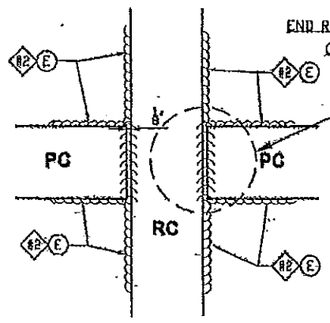

RAFTER AND PURLIN CAP DETAIL

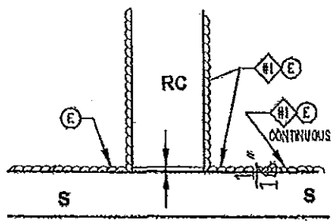

RAFTER CAP AND SILL DETAIL

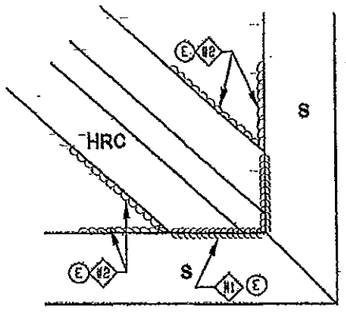

RAFTER AND SILL CAP DETAIL AT CORNERS

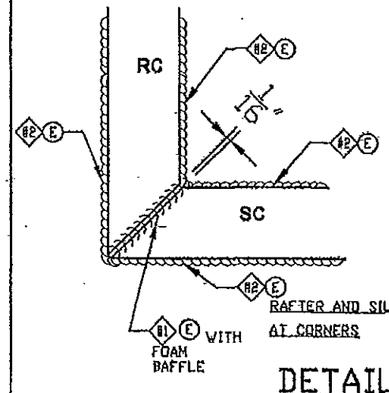

RAFTER AND SILL CAP DETAIL AT CORNERS

PRODUCT RENEWED
as complying with the Florida Building Code
Acceptance No 12-0924.01
Expiration Date 09/24/2013
By
Miami Dade Product Control

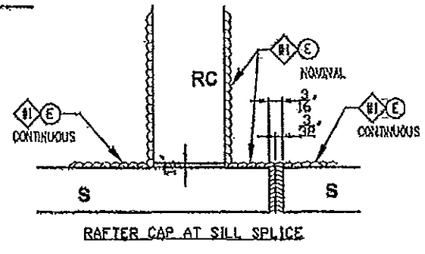

RAFTER CAP AT SILL SPLICE

DETAIL "B": TYPICAL SEALING AT INTERSECTIONS OF CAPS

LEGEND: FOR DETAIL "B"

- PC: PURLIN CAP
- RRC: RIDGE RAFTER CAP
- RC: RAFTER CAP
- SC: SILL CAP
- S: SILL
- HRC: HIP RAFTER CAP

SEALANT DETAILS AT PRESSURE PLATES & CAPS

FLORIDA BUILDING CODE (High Velocity Hurricane Zone)

STORMMAX HURRICANE RESISTANT SKYLIGHT SMALL MISSILE

Oldcastle BuildingEnvelope™
805 Airport Rd - Terrell, TX 75160
www.OldcastleBE.com - Phone 800-869-4567

DRAWN BY: A.G.
12/01/11 DATE
11-136 DRAWING No
SHEET 9 OF 10

DESCRIPTION	DATE
1 ADD TM-6520	10/27/11
2	
3	

©2011 TILLETT, INC.

TILLETT TESTING & ENGINEERING COMPANY
2323 N.W. 30th Place, Suite 205, Gainesville, FL 32605
Phone: (352)371-1550 Fax: (352)371-1551
e-mail: tillco@aol.com
EB-0005719
WALTER A. TILLIT JR. P.E.
FLORIDA Lic. # 44167

WALTER A. TILLIT JR. LICENSE No. 44167 STATE OF FLORIDA PROFESSIONAL ENGINEER
P.E. SEAL/SIGNATURE/DATE

PRODUCT REVISED
as complying with the Florida Building Code
Acceptance No 11-0923.02
Expiration Date 09/24/2012
By
Miami Dade Product Control

MIAMI DADE COUNTY

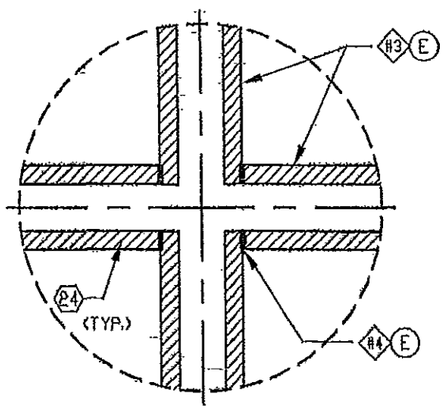

TYPICAL GASKET INTERSECTION (PLAN)

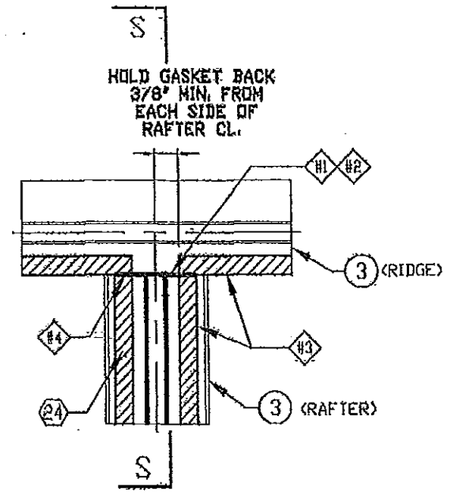

RAFTER TO RIDGE (PLAN)

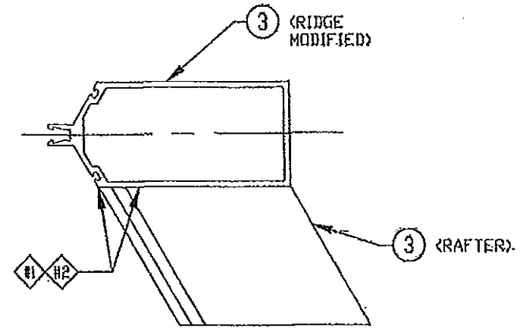

SECTION S-S
RAFTER TO RIDGE

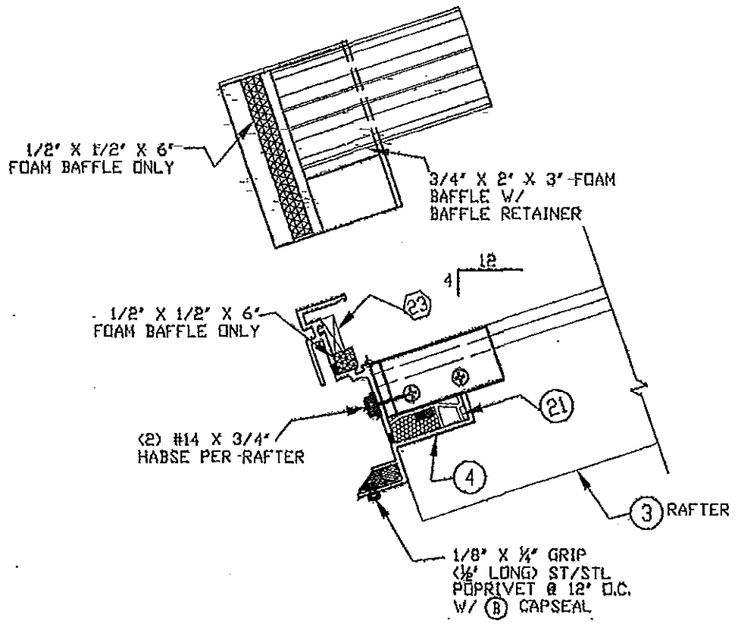

SILL TO RAFTER

ERECTION & GLAZING NOTES:

#1 SEAL ALL RAFTERS TO HIPS, RIDGES & COMP RINGS W/ B SEALANT

#2 ALL METAL TO METAL CONNECTIONS TO BE CLEANED WITH DOW P5200 ADHESION PROMOTER OR OTHER SUITABLE CLEANER. PRIME AS REQUIRED & SEALED W/ B SEALANT

#3 GASKETS ON ALL FRAMING TO BE FIELD INSTALLED & COMPRESSED APPROX.. 1/8" PER FOOT

#4 BUTT SEAL ALL GASKET INTERSECTIONS W/ A SEALANT

#5 CLEAN AND PRIME NOTCH AT END OF PURLINS PRIOR TO RUNNING A BEAD OF B SEALANT OR BUTYL ROD THROUGH NOTCH.

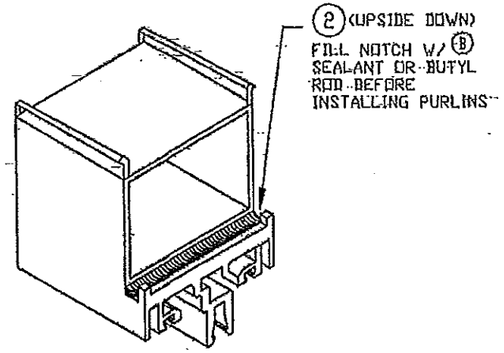

PURLIN END VIEW #5
ISOMETRIC

NOTCHED PURLIN SEALING DETAIL

PRODUCT RENEWED
as complying with the Florida Building Code
Acceptance No 12-0924.01
Expiration Date 09/24/2013
By
Miami Dade Product Control

SEALING DETAIL BETWEEN GASKETS AT RAFTERS & RIDGE, AS WELL AS NOTCHED PURLIN SEALING DETAIL

FLORIDA BUILDING CODE (High Velocity Hurricane Zone)

STORMMAX HURRICANE RESISTANT SKYLIGHT SMALL MISSILE

Oldcastle BuildingEnvelope™
803 Airport Rd - Terrell, TX 75160
www.OldcastleBE.com - Phone 800-869-4567

DRAWN BY: A.E.
12/01/11 DATE
11-136 DRAWING No.
SHEET 10 OF 10

©2011 TILTECO, INC.

TILTECO INC.
TILLIT TESTING & ENGINEERING COMPANY
6355 N.W. 35th St., Ste. 305, VIRGINIA GARDENS, FL 33166
Phone: (305)871-1500 - Fax: (305)871-1533
e-mail: tilteco@aol.com
EB-0005719
WALTER A. TILLIT Jr. P.E.
FLORIDA Lic. # 44167

WALTER A. TILLIT JR. LICENSE No. 44167 STATE OF FLORIDA PROFESSIONAL ENGINEER
P.E. SEAL/SIGNATURE/DATE

PRODUCT REVISED
as complying with the Florida Building Code
Acceptance No 11-0923.02
Expiration Date 09/24/2012
By
Miami Dade Product Control

MIAMI DADE COUNTY