MIAMI-DADE COUNTY
PRODUCT CONTROL SECTION
11805 SW 26 Street, Room 208
Miami, Florida 33175-2474
T (786) 315-2590 F (786) 315-2599
www.miamidade.gov/economy

DEPARTMENT OF REGULATORY AND ECONOMIC RESOURCES (RER)
BOARD AND CODE ADMINISTRATION DIVISION

NOTICE OF ACCEPTANCE (NOA)

Oldcastle Building Envelope, Inc.(TX)
803 Airport Road
Terrell, TX 75160

SCOPE:

This NOA is being issued under the applicable rules and regulations governing the use of construction materials. The documentation submitted has been reviewed and accepted by Miami-Dade County RER -Product Control Section to be used in Miami Dade County and other areas where allowed by the Authority Having Jurisdiction (AHJ).

This NOA shall not be valid after the expiration date stated below. The Miami-Dade County Product Control Section (In Miami Dade County) and/or the AHJ (in areas other than Miami Dade County) reserve the right to have this product or material tested for quality assurance purposes. If this product or material fails to perform in the accepted manner, the manufacturer will incur the expense of such testing and the AHJ may immediately revoke, modify, or suspend the use of such product or material within their jurisdiction. RER reserves the right to revoke this acceptance, if it is determined by Miami-Dade County Product Control Section that this product or material fails to meet the requirements of the applicable building code.

This product is approved as described herein, and has been designed to comply with the Florida Building Code, including the High Velocity Hurricane Zone.

DESCRIPTION: Series "MSD–375"Outswing Glazed Aluminum Entrance Doors with and/ or without Transom

APPROVAL DOCUMENT: Drawing No. **13-034** (Former **11–126**), titled "Series MSD–375 Aluminum Medium Stile Entrance Door (Wet Glazed)", sheets 1 through 24 (including 11A & 16A) of 24, dated 04/08/13, prepared by Tilteco, Inc., signed and sealed by Walter A. Tillit Jr., P. E., bearing the Miami–Dade County Product Control Revision stamp with the Notice of Acceptance number and expiration date by the Miami–Dade County Product Control Section.

MISSILE IMPACT RATING: Large and Small Missile Impact Resistant

LIMITATIONS:

1. Maximum Design Pressure Rating of **+ 70** PSF (Positive) and **– 80 PSF** (Negative). When doors or doors w/transom are mulled with **FG 5000** (Window wall) or **FG 5100** (Window Wall) or **HR250** Curtain Wall or **HR 251** Curtain Wall framing, the lower design pressure of this door or the mulled Window Wall or Curtain Wall shall control for entire assembly.
2. The Oldcastle Window Wall (WW) and Curtain Wall (CW) are under separate approval. The adequacy of anchors at the door mullion top & bottom end tributary loading condition to be reviewed by Bldg. official. This approval is **not** intended to revise any condition approved under respective WW or CW Notices of Acceptances(NOA(s))
3. The doors or doors w/ Transom are **not** rated for Water Resistant requirements.
4. The 24" high transom insulated glass details **6A**/14 and **7A**/14 consists of ¼" Tempered glass outboard+1/2"air + inboard laminated glass consist of 1/4"HS +.075"SaflexCP +1/4"HS

RENEWAL of this NOA shall be considered after a renewal application has been filed and there has been no change in the applicable building code negatively affecting the performance of this product.

TERMINATION of this NOA will occur after the expiration date or if there has been a revision or change in the materials, use, and/or manufacture of the product or process. Misuse of this NOA as an endorsement of any product, for sales, advertising or any other purposes shall automatically terminate this NOA. Failure to comply with any section of this NOA shall be cause for termination and removal of NOA.

ADVERTISEMENT: The NOA number preceded by the words Miami-Dade County, Florida, and followed by the expiration date may be displayed in advertising literature. If any portion of the NOA is displayed, then it shall be done in its entirety.

INSPECTION: A copy of this entire NOA shall be provided to the user by the manufacturer or its distributors and shall be available for inspection at the job site at the request of the Building Official.

This NOA **revises NOA # 11-1206.10** and consists of this page 1 and evidence pages E-1, E-2 and E-3, as well as approval document mentioned above.

The submitted documentation was reviewed by **Ishaq I. Chanda, P.E.**

MIAMI-DADE COUNTY APPROVED
5/28/13

Oldcastle Building Envelope, Inc.(TX)

NOTICE OF ACCEPTANCE: EVIDENCE SUBMITTED

A. DRAWINGS

1. Manufacturer's die drawings and sections (Submitted under files # **11-1206.10**)
2. Drawing No. **13-034** (Former **11–126**), titled "Series MSD–375 Aluminum Medium Stile Entrance Door (Wet Glazed)", sheets 1 through 24 (including 11A & 16A) of 24, dated 04/08/13, prepared by Tilteco, Inc., signed and sealed by Walter A. Tillit Jr., P. E.

B. TESTS

1. Test reports on: 1) Air Infiltration Test, per FBC, TAS 202-94 (Not conducted)
   2) Uniform Static Air Pressure Test, Loading per FBC TAS 202-94
   3) Water Resistance Test, per FBC, TAS 202-94 (Not conducted)
   4) Large Missile Impact Test per FBC, TAS 201-94
   5) Cyclic Wind Pressure Loading per FBC, TAS 203-94
   6) Forced Entry Test, per FBC 2411 3.2.1, TAS 202-94

   Along with marked-up drawings and installation diagram of double doors w/ Regent CVR panic Devices, prepared by Architectural Testing, Test Report No. **C0344.01-450-18**, dated 06/13/12, signed and sealed by Vinu Abraham, P.E.
2. Test reports on: 1) Uniform Static Air Pressure Test, Loading per FBC, TAS 202–94
   2) Large Missile Impact Test, per FBC, TAS 201–94
   3) Cyclic Wind Pressure Loading, per FBC, TAS 203–94
   4) Forced Entry Test, per FBC 2411 3.2.1 and TAS 202–94

   along with marked–up drawings and installation diagram of **aluminum medium stile entrance doors**, prepared by Architectural Testing, Inc., Test Report No. **ATI–89818.01–401–18,** dated 11/18/08 and 06/26/09, both signed and sealed by Joseph A. Reed, P. E. (Submitted under files # **11-1206.10/ #09–1228.01**)
3. Test reports on: 1) Air Infiltration Test, per FBC, TAS 202–94
   2) Uniform Static Air Pressure Test, Loading per FBC, TAS 202–94
   3) Water Resistance Test, per FBC, TAS 202–94
   4) Large Missile Impact Test, per FBC, TAS 201–94
   5) Cyclic Wind Pressure Loading, per FBC, TAS 203–94
   6) Forced Entry Test, per FBC 2411 3.2.1 and TAS 202–94

   along with marked-up drawings and installation diagram of **aluminum medium stile entrance doors,** prepared by Hurricane Test Laboratory, Inc., Test Reports No.'s **HTL–0105–1030–02, HTL–0105–0712–03, HTL–0105–0205–03,** HTL–**0105–0810–03, HTL–0105–0210–04** and **HTL–0105–0407–04,** dated 10/21/02 and 04/05/04, all signed and sealed by Vinu J. Abraham, P. E. (Submitted under file # **04–0209.03**)
4. REF Test reports on: 1) Air Infiltration Test, per FBC, TAS 202–94
   2) Uniform Static Air Pressure Test, Loading per FBC, TAS 202–94
   3) Water Resistance Test, per FBC, TAS 202–94
   4) Large Missile Impact Test, per FBC, TAS 201–94
   5) Cyclic Wind Pressure Loading, per FBC, TAS 203–94

   along with marked–up drawings and installation diagram of Aluminum **Storefront**, prepared by Certified Testing Laboratories, Inc., Test Report No. **CTLA–1177W,** dated 01/06/04, signed and sealed by Ramesh Patel, P. E. (Submitted under **FG-5100** Storefront Systems)

Ishaq I. Chanda

Ishaq I. Chanda, P.E.
Product Control Examiner
NOA No. 12-0926.05
Expiration Date: February 17, 2015
Approval Date: May 30, 2013

B. TEST (Continue)

5. REF Test reports on: 1) Air Infiltration Test, per FBC, TAS 202–94
   2) Uniform Static Air Pressure Test, Loading per FBC, TAS 202–94
   3) Water Resistance Test, per FBC, TAS 202–94
   4) Large Missile Impact Test, per FBC, TAS 201–94
   5) Cyclic Wind Pressure Loading, per FBC, TAS 203–94

along with marked–up drawings and installation diagram of Aluminum **Storefront**, prepared by Architectural Testing, Test Report No.**ATI-A1052.01-801-18, ATI-8918.01-401-18, ATI-8611.01-401.18, ATI-86107.01-401.18** and **ATI-74785.02-401.18**, all signed and sealed by Joseph A. Reed, P. E. (Submitted under **FG-5000** Storefront Systems).

6. REF Test reports on: 1) Air Infiltration Test, per FBC, TAS 202–94
   2) Uniform Static Air Pressure Test, Loading per FBC, TAS 202–94
   3) Water Resistance Test, per FBC, TAS 202–94
   4) Large Missile Impact Test, per FBC, TAS 201–94
   5) Cyclic Wind Pressure Loading, per FBC, TAS 203–94

along with marked–up drawings and installation diagram of Aluminum **Curtain Wall System**, prepared by Hurricane Testing, Test Report No. **HTL–0105–1194.04, HTL–0105–0809.04** and **HTL–0105–0717.04**, all signed and sealed by Vinu Abraham, P. E. (Submitted under **HR-250** Curtain Wall Systems).

7) REF Test reports on: 1) Air Infiltration Test, per FBC, TAS 202–94
   2) Uniform Static Air Pressure Test, Loading per FBC, TAS 202–94
   3) Water Resistance Test, per FBC, TAS 202–94
   4) Large Missile Impact Test, per FBC, TAS 201–94
   5) Cyclic Wind Pressure Loading, per FBC, TAS 203–94

along with marked–up drawings and installation diagram of Captured **Curtain Wall System**, prepared by Architectural Testing, Test Report No.**ATITX-A4707.01-801-18** and ATITX-**A4707.01-801-18** signed and sealed by Shawn Collins, P.E. and Joseph A. Reed, P. E., respectively.

along with marked–up drawings and installation diagram of Captured **Curtain Wall System**, prepared by Hurricane Testing, Test Report No. **HTL–0105–0117.05** and **HTL–0105–0903.08** signed and sealed by Vinu Abraham, P. E. (Submitted under **HR-251 C.W. Systems**).

C. CALCULATIONS

1. Structural properties & comparative analysis calculations dated 01/22/13, prepared by Tilteco, Inc., dated 12/09/10, signed and sealed by Walter A. Tillit Jr., P. E.
2. Anchor verification calculations and structural analysis, complying with FBC–2007, prepared by Tilteco, Inc., dated 12/09/10, signed and sealed by Walter A. Tillit Jr., P. E.(Submitted under file **#10–1214.16**)
3. Glazing complies with ASTM E1300–04

D. QUALITY ASSURANCE

1. Miami Dade Department of Regulatory and Economic Resources (RER).

Ishaq I. Chanda

Ishaq I. Chanda, P.E.
Product Control Examiner
NOA No. 12-0926.05
Expiration Date: February 17, 2015
Approval Date: May 30, 2013

E. MATERIAL CERTIFICATIONS

1. Notice of Acceptance No. **12-1231.08,** issued to **Eastman Chemical Company (MA),** for their "**Saflex CP" Saflex** and **Saflex HP Composite Glass Interlayer w/ PET Core**", expiring on 12/11/18.
2. Notice of Acceptance No. **12-1231.09**, issued to **Eastman Chemical Company (MA),** for their "**Saflex HP" Clear & color Glass Interlayer**", expiring on 04/14/18
3. Notice of Acceptance No. **12-1231.10**, issued to **Eastman Chemical Company (MA),** for their "**Saflex clear & color Glass Interlayer**", expiring on 05/21/16

F. STATEMENTS

1. Statement letter dated 09/17/12 of "No financial interest", prepared by Tilteco, Inc., signed and sealed by Walter A. Tillit Jr., P. E.
2. Statement letter dated 12/05/11 of conformance to FBC2010, prepared by Tilteco, Inc., signed and sealed by Walter A. Tillit, Jr., P. E. (Submitted under **# 11-1206.10)**
3. Statement letter dated OCT. 19, 2010 of name change due to Merger from Oldcastle Engineered Products to Oldcastle Building Envelope, Inc., issued by Oldcastle Building Envelope, signed by Ms. Jacqueline D. Butler, Corporate Paralegal/ Legal Assistant (Submitted under file **# 10–1214.16)**
4. Asset transfer agreement, dated April 20, 2010, signed by Mr. James Avanzini, Present of Oldcastle Glass Engineered Products, Inc. (Submitted under file **# 10–1214.16)**
5. Asset sale agreement dated June 29, 2007 by Oldcastle Glass Engineered Products, Inc. dba Oldcastle Windows, Inc. and Vistawall Architectural Products division of Butler MFR. Products, Moduline Windows, Inc., signed by Mr. Adam J. Newman, Vice President of Oldcastle Glass Engineered Products and Mr. Daipayan (Deep) Bhattacharya, Vice President of Vistawall Architectural Product (Submitted under file ***# 09 –1228.01***)
6. Notarized statement letter dated 03/05/10, issued by Oldcastle Glass, certifying that Oldcastle Glass Engineered Products, Inc. (Former Oldcastle Window Inc) has purchased Vistawall, a Div. of Butler Manufacturing Products, signed by Mollie Hines, Vice President & Secretory of Oldcastle Glass. (Submitted under file ***# 09 –1228.01***)
7. Statement letter dated DEC 17, 2009 of compliance with the FBC2007, issued by Tilteco, Inc., signed and sealed by Walter A. Tillit, Jr., P. E.*(* Submitted under file ***# 09 –1228.01)***
8. Laboratories compliance letters, part of above referenced test reports.

G. OTHER

1. This NOA **revises NOA # 11-1206.10**, expiring on 02/17/15.
2. The previous NOA(s) associated with this door files are NOA # **10–1214.16** (Oldcastle Building Envelope, Inc.), **09 –1228.01** (Oldcastle Engineered Products, Inc.) and **04–0209.03** (Vistawall Architectural Products Inc.).
3. Reference **FG-5000** Storefront Systems, **FG-5100** Storefront Systems, **HR-250 C.W. Systems** and **HR-251 Curtain Wall Systems** (under separate approvals).

Ishaq I. Chanda

Ishaq I. Chanda, P.E.
Product Control Examiner
NOA No. 12-0926.05
Expiration Date: February 17, 2015
Approval Date: May 30, 2013

PRODUCT APPROVAL FOR SERIES MSD-375 ALUMINUM MEDIUM STILE ENTRANCE DOORS (WET GLAZED) FOR USE IN HURRICANE ZONES REQUIRING LARGE & SMALL MISSILE IMPACT PROTECTION.

GENERAL NOTES:

1. SERIES MSD-375 ALUMINUM MEDIUM STILE ENTRANCE DOORS (WET GLAZED) LARGE & SMALL MISSILE IMPACT LAMINATED GLASS SHOWN ON THIS PRODUCT APPROVAL DOCUMENT (P.A.D.) HAS BEEN VERIFIED FOR COMPLIANCE IN ACCORDANCE WITH THE 2010 EDITION OF THE FLORIDA BUILDING CODE. THIS PRODUCT MAY BE INSTALLED WITHIN HIGH VELOCITY HURRICANE ZONES.
   DESIGN WIND LOADS SHALL BE DETERMINED AS PER SECTION **1620** OF THE ABOVE MENTIONED CODES, USING ASCE 7-10 STANDARD AND SHALL NOT EXCEED THE MAXIMUM (A.S.D.) DESIGN PRESSURE RATINGS INDICATED ON NOTE 2.
   IN ORDER TO VERIFY THE ABOVE CONDITION, ULTIMATE DESIGN WIND LOADS DETERMINED PER ASCE 7-10 SHALL BE FIRST REDUCED TO A.S.D. DESIGN WIND LOADS BY MULTIPLYING THEM BY 0.6 IN ORDER TO TO COMPARE THESE W/ MAX. (A.S.D) DESIGN PRESSURE RATINGS INDICATED ON NOTE 2.
   IN ORDER TO VERIFY THAT ANCHORS ON THIS P.A.D., AS TESTED, WERE NOT OVERSTRESSED, A 33% INCREASE IN ALLOWABLE STRESS FOR WIND LOADS WAS **NOT** USED IN THEIR ANALYSIS. FASTENERS SPACING TO WOOD HAS BEEN DETERMINED IN IN ACCORDANCE WITH N.D.S. 2005.
   THIS PRODUCT'S ADEQUACY FOR IMPACT AND WIND RESISTANCE HAS BEEN VERIFIED IN ACCORDANCE WITH SECTION 1626 OF THE ABOVE MENTIONED CODE AS PER PROTOCOLS TAS-201, TAS-202, TAS-203, PER HURRICANE TESTING LABORATORY REPORTS # HTL-0105-1030-02, HTL-0105-0712-03, HTL-0105-0205-03, HTL-0105-0810-03, HTL-0105-0210-04 AND HTL-0105-0407-04; PER CERTIFIED TESTING LABORATORIES REPORT # CTLA-1177W (FOR DOOR CERTIFICATION INSTALLATION WITH FG-5000 AND FG-5100 WINDOW WALL SYSTEM); PER ARCHITECTURAL TESTING LAB REPORT # C0344.01-450-18 (NEW PANIC HARDWARE) AND AS PER SUBMITTED STRUCTURAL CALCULATIONS, PERFORMED AS PER SECTION **1615** OF THE FLORIDA BUILDING CODE.
2. **MAXIMUM A.S.D. DESIGN PRESSURE RATING FOR THIS PRODUCT SHALL BE +70 psf, -80 psf.**
3. THIS PRODUCT WILL NOT REQUIRE A HURRICANE PROTECTION DEVICE.
4. THIS PRODUCT IS APPROVED FOR AIR INFILTRATION.
5. THIS PRODUCT IS NOT APPROVED FOR WATER INFILTRATION.
6. PROVIDE 1/4" MAX. LOAD BEARING SHIM (TYP.), WHEN ALLOWED BY THIS DRAWING.
7. ALL SCREWS USED FOR ASSEMBLY CONNECTIONS (METAL TO METAL TO BE STAINLESS STEEL 304 OR 316 AISI SERIES OR CORROSION RESISTANT COATED CARBON STEEL AS PER DIN 50018 AND SECTION 2411.3.3.4 OF THE FLORIDA BUILDING CODE WITH 50 ksi YIELD STRENGTH AND 90 ksi TENSILE STRENGTH.
8. WOOD BUCKS BY OTHERS, MUST BE ANCHORED PROPERLY TO TRANSFER LOADS TO THE BUILDING STRUCTURE. WOOD BUCKS MUST BE SOUTHERN PINE, G = 0.55, AND SHALL COMPLY WITH SECTIONS 2411.3.3.3 & 2326 OF THE FLORIDA BUILDING CODE.
9. REMAINING COMPONENTS FOR THIS PRODUCT SHALL BE AS INDICATED ON BILL OF MATERIALS, SHEETS 4 & 5 OF THIS DRAWING AND AT HARDWARE SCHEDULE ON SHEETS 6 & 7 OF THE DRAWING.
10. ALL ALUMINUM EXTRUSIONS IN CONTACT WITH STEEL, CONCRETE, GROUT FILLED CONCRETE BLOCK AND WOOD SHALL COMPLY WITH SECTIONS 2003.8.4.2, 2003.8.4.4, 2003.8.4.5 AND 2003.8.4.6 OF THE FLORIDA BUILDING CODE, RESPECTIVELY.
11. SHOP DRAWINGS PREPARED BASED ON THIS APPROVAL AND TAKING INTO ACCOUNT THE SPECIFIC JOB CONDITIONS, SHALL BE SUBMITTED TO THE BUILDING OFFICIAL AS PART OF THE PERMIT DOCUMENTS.
12. SUBSTRATE MATERIAL NOTED ON THIS DRAWING AS EXISTING BY OTHERS, POURED CONCRETE, GROUT FILLED CONCRETE BLOCK AND WOOD MUST WITHSTAND THE LOADS IMPOSED BY THIS PRODUCT.
13. THIS PRODUCT'S INSTALLATION SHALL COMPLY WITH ALL SPECS INDICATED IN THIS DRAWING PLUS ANY BUILDING AND ZONING REGULATIONS PROVIDED BY THE JURISDICTION WHERE PERMIT IS APPLIED TO.
14. (a) THIS P.A.D. PREPARED BY THIS ENGINEER IS GENERIC AND DOES NOT PROVIDE INFORMATION FOR A SITE SPECIFIC PROJECT; i.e. WHERE THE SITE CONDITIONS DEVIATE FROM THE P.A.D.

    (b) CONTRACTOR TO BE RESPONSIBLE FOR THE SELECTION, PURCHASE AND INSTALLATION INCLUDING LIFE SAFETY OF THIS PRODUCT, BASED ON THIS P.A.D., PROVIDED HE/SHE DOES NOT DEVIATE FROM THE CONDITIONS DETAILED ON THIS DOCUMENT. CONSTRUCTION SAFETY AT SITE IS THE CONTRACTOR'S RESPONSIBILITY.

    (c) THIS P.A.D. WILL BE CONSIDERED INVALID IF ALTERED BY ANY MEANS.

    (d) SITE SPECIFIC PROJECTS SHALL BE PREPARED BY A FLORIDA REGISTERED ENGINEER OR ARCHITECT WHICH WILL BECOME THE ENGINEER OF RECORD (E.O.R.) FOR THE PROJECT AND WHO WILL BE RESPONSIBLE FOR THE PROPER USE OF THE P.A.D. ENGINEER OF RECORD, ACTING AS DELEGATED ENGINEER TO THE P.A.D. ENGINEER, SHALL SUBMIT TO THIS LATTER THE SITE SPECIFIC DRAWINGS FOR REVIEW.

    (e) ORIGINAL P.A.D. SHALL BEAR THE DATE AND ORIGINAL SEAL AND SIGNATURE OF THE PROFESSIONAL ENGINEER OF RECORD THAT PREPARED IT.
15. PRODUCT MANUFACTURER'S LABEL SHALL BE PLACED ON A READILY VISIBLE LOCATION. ONE LABEL SHALL BE PLACED FOR EVERY UNIT. LABEL SHALL READ AS FOLLOWS:

    Oldcastle
    BuildingEnvelope TM
    TERRELL TX.
    MIAMI--DADE COUNTY PRODUCT CONTROL APPROVED.

INDEX:

SHEET 1: GENERAL NOTES AND INDEX.
SHEET 2: SERIES MSD-375 ALUM. MEDIUM STILE ENTRANCE DOORS (WET GLAZED) COMPONENTS.
SHEET 3: SERIES MSD-375 ALUM. MEDIUM STILE ENTRANCE DOORS (WET GLAZED) COMPONENTS (CONTINUED).
SHEET 4: BILL OF MATERIALS.
SHEET 5: BILL OF MATERIALS (CONTINUED).
SHEET 6: HARDWARE SCHEDULES (3'-6" X 8'-0" SINGLE).
SHEET 7: HARDWARE SCHEDULES (7'-0" X 8'-0" PAIR).
SHEET 8: TYPICAL GLAZED DETAILS AND GLASS SCHEDULE.
SHEET 9: TYPICAL PANEL ELEVATIONS FOR MSD-375 IMPACT DOOR (WET GLAZED).
SHEET 10: DOOR'S TOP BOTTOM RAILS AND HORIZONTAL MID-RAIL DETAILS (SIDE VIEWS).
SHEET 11: DOOR'S JAMB/MEETING STILES & THRESHOLD CONNECTION DETAILS (PLAN VIEWS).
SHEET 11A: TYPICAL DOOR CORNER ASSEMBLY DETAILS.
SHEET 12: TYPICAL ELEVATION FOR MSD-375 IMPACT DOOR (WET GLAZED) CONNECTED TO EXISTING STRUCTURE OR FG-5000 ALUM. WINDOW WALL SYSTEM FRAMING.
SHEET 13: TYPICAL ELEVATION FOR MSD-375 IMPACT DOOR (WET GLAZED) CONNECTED TO EXISTING STRUCTURE OR FG-5100 ALUM. WINDOW WALL SYSTEM FRAMING.
SHEET 14: TRANSOM BAR CONNECTION DETAILS (SIDE VIEWS AT FG-5000 AND FG-5100) AND THRESHOLD CONNECTION DETAILS (SIDE VIEWS AT FG-5000, FG-5100, HR-250 AND HR-251).
SHEET 15: HEADER CONNECTION DETAILS TO EXISTING STRUCTURE, FG-5000, FG-5100,
SHEET 16: JAMB & JAMB MULLION CONNECTION TO EXISTING STRUCTURE, FG-5000 AND FG-5100
SHEET 16A: HEADER CONNECTION DETAILS TO EXISTING STRUCTURE.
SHEET 17: TYPICAL ELEVATION FOR MSD-375 IMPACT DOOR (WET GLAZED) CONNECTED TO EXISTING STRUCTURE OR HR-250 AND HR-251 CAPTURED CURTAIN WALL SYSTEM FRAMING.
SHEET 18: TRANSOM BAR AND HEADER CONNECTION DETAILS TO HR-250 AND HR-251).
SHEET 19: JAMB CONNECTION DETAILS TO HR-250.
SHEET 20: JAMB CONNECTION DETAILS TO HR-251.
SHEET 21: TYPICAL ELEVATIONS FOR DOOR ADJACENT TO FG-5000 & FG-5100 ALUM. WINDOW WALL SYSTEM FRAMING, TO EXISTING STRUCTURE AND TO HR-250 & HR-251 CAPTURED CURTAIN WALL SYSTEM FRAMING AND PERIMETER FRAME FASTENER LOCATIONS (TYPICAL INSTALLATION INTO CONCRETE OR GROUT FILLED CONCRETE BLOCK SUBSTRATES).
SHEET 22: TYPICAL ELEVATIONS FOR DOOR ADJACENT TO FG-5000 & FG-5100 ALUM. WINDOW WALL SYSTEM FRAMING, TO EXISTING STRUCTURE AND TO HR-250 & HR-251 CAPTURED CURTAIN WALL SYSTEM FRAMING AND PERIMETER FRAME FASTENER LOCATIONS (TYPICAL INSTALLATION INTO STEEL SUBSTRATE).
SHEET 23: TYPICAL ELEVATIONS FOR DOOR ADJACENT TO FG-5000 & FG-5100 ALUM. WINDOW WALL SYSTEM FRAMING, TO EXISTING STRUCTURE AND TO HR-250 & HR-251 CAPTURED CURTAIN WALL SYSTEM FRAMING AND PERIMETER FRAME FASTENER LOCATIONS (TYPICAL INSTALLATION INTO WOOD SUBSTRATE).
SHEET 24: STANDARD HARDWARE LOCATIONS FOR SERIES MSD-375 IMPACT DOORS (WET GLAZED).

FLORIDA BUILDING CODE (High Velocity Hurricane Zone)

©2013 TILTECO, INC

SERIES MSD-375 ALUMINUM MEDIUM STILE ENTRANCE DOOR (WET GLAZED) LARGE & SMALL MISSILE IMPACT

A.G. DRAWN BY:
04/04/13 DATE
13-034 DRAWING No
SHEET 1 OF 24

Oldcastle BuildingEnvelope™
803 Airport Rd - Terrell, TX 75160
www.OldcastleBE.com - Phone 800-869-4567

TILTECO INC.
TILLIT TESTING & ENGINEERING COMPANY
6355 N.W. 36th. St. Ste. 305, VIRGINIA GARDENS, FL 33166
Phone : (305)871-1530 , Fax : (305)871-1531
e-mail: tilteco@aol.com
EB-0006719
WALTER A. TILLIT Jr. P.E.
FLORIDA Lic. # 44167

REV. No	DESCRIPTION	DATE	REV. No	DESCRIPTION	DATE
1	OLD 12-157	04/04/13	3		
2			4		

WALTER A. TILLIT JR. LICENSE NO. 44167 STATE OF FLORIDA PROFESSIONAL ENGINEER

SIGNATURE/DATE
P.E. SEAL

PRODUCT REVISED
as complying with the Florida Building Code
Acceptance No 12-0926.05
Expiration Date FEB 17 2015
By Ichas L. Llanda
Miami Dade Product Control

MIAMI-DADE COUNTY

SERIES MSD-375 ALUMINUM MEDIUM STILE ENTRANCE DOORS (WET GLAZED) COMPONENTS

SCALE: 3/8" = 1"

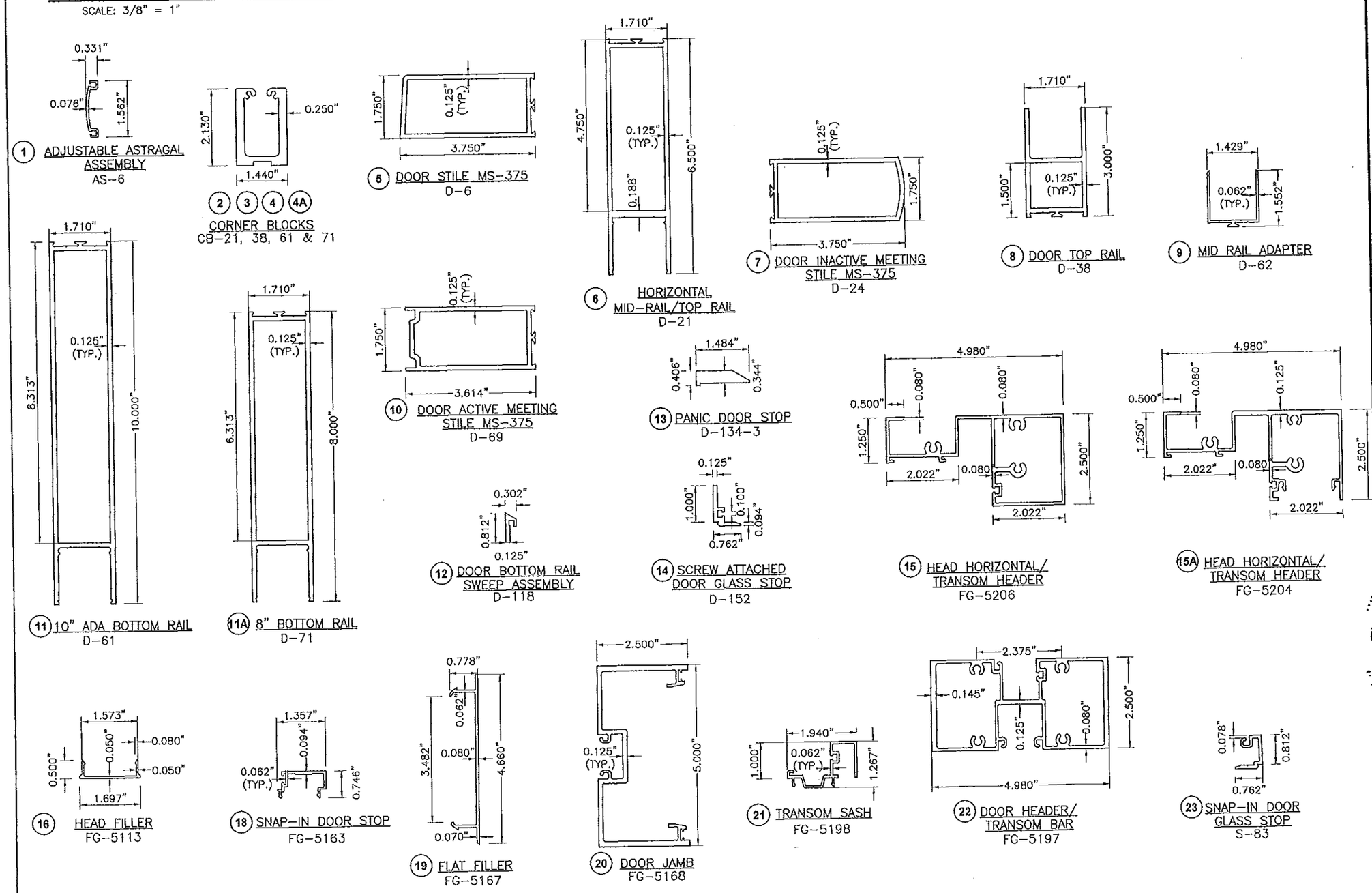

FLORIDA BUILDING CODE (High Velocity Hurricane Zone)

A.G. DRAWN BY:

04/04/13 DATE

13-034 DRAWING No

SHEET 2 OF 24

SERIES MSD-375 ALUMINUM MEDIUM STILE ENTRANCE DOOR (WET GLAZED)
LARGE & SMALL MISSILE IMPACT

Oldcastle BuildingEnvelope™
803 Airport Rd - Terrell, TX 75160
www.OldcastleBE.com - Phone 800-869-4567

REV. No	DESCRIPTION	DATE	REV. No	DESCRIPTION	DATE
1	OLD 12-157	04/04/13	3		
2			4		

©2013 TILTECO, INC

TILTECO INC.
TILLIT TESTING & ENGINEERING COMPANY
6335 N.W. 36th St., Ste. 305, VIRGINIA GARDENS, FL 33166
Phone : (305)871-1530 , Fax : (305)871-1531
e-mail: tilteco@aol.com
EB-0006719
WALTER A. TILLIT Jr. P.E.
FLORIDA Lic. # 44167

WALTER A. TILLIT JR. LICENSE No. 44167 STATE OF FLORIDA PROFESSIONAL ENGINEER

P.E. SEAL/SIGNATURE/DATE

PRODUCT REVISED
as complying with the Florida Building Code
Acceptance No. 12-0926.05
Expiration Date 2/17/15
By [signature]
Miami Dade/Product Control

MIAMI-DADE COUNTY

SERIES MSD-375 ALUMINUM MEDIUM STILE ENTRANCE DOORS (WET GLAZED) COMPONENTS (CONTINUED)

SCALE: 3/8" = 1"

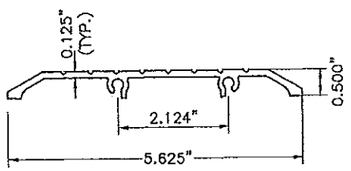

(24) THRESHOLD
TH-57

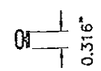

(25) DOOR STOP WEATHERING
D-125

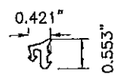

(26) DRY GLAZING GASKET
FG-1133

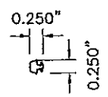

(35) SPACER GASKET
FG-5188

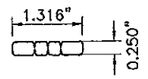

(36) SETTING BLOCK
HP-17

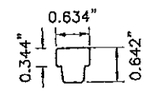

(36A) SETTING BLOCK
FG-5229

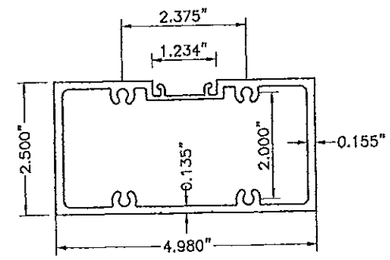

(42) DOOR HEADER-OFFSET ARM
FG-5172

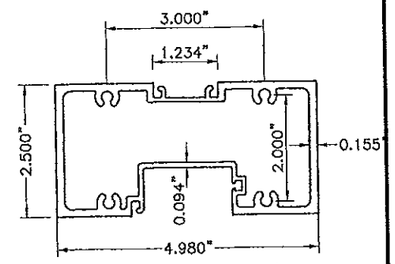

(42A) DOOR HEADER/TRANSOM BAR
FG-5235

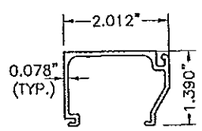

(47) GLASS STOP
FG-5190

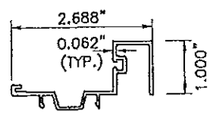

(50) TRANSOM SASH
FG-5181

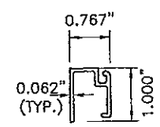

(52) TRANSOM GLASS STOP
FG-5182

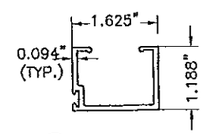

(53) DOOR STOP
DS-104

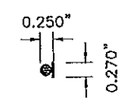

(56) BULB GASKET FOR FILLER
CW-998

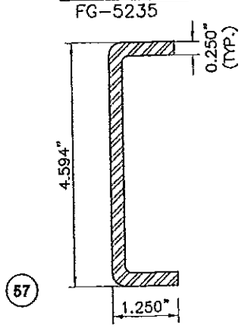

(57) DOOR JAMB STEEL REINFORCEMENT
FG-5000--PP-8

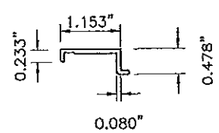

(60) ANCHOR PLATE
FG-5000--FP-17
8" LONG

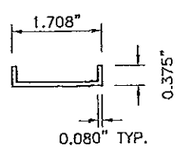

(62) ANCHOR PLATE
FG-5000--FP-19
8" LONG

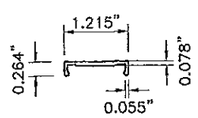

(63) ANCHOR PLATE
FG-5000--FP-20
8" LONG

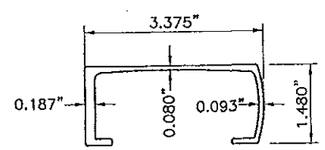

(64) STILE REINFORCEMENT SLEEVE
D-243-01
5.26" LONG

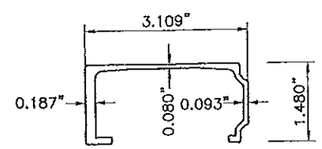

(65) STILE REINFORCEMENT SLEEVE
D-244-01
5.26" LONG

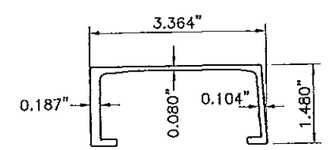

(66) STILE REINFORCEMENT SLEEVE
D-247-01
5.26" LONG

FLORIDA BUILDING CODE (High Velocity Hurricane Zone)

©2013 TILTECO, INC

TILTECO INC.
TILLIT TESTING & ENGINEERING COMPANY
6355 N.W. 36th. St., Ste. 305, VIRGINIA GARDENS, FL 33166
Phone : (305)871-1530 , Fax : (305)871-1531
e-mail: tilteco@aol.com
EB-0006719
WALTER A. TILLIT JR., P.E.
FLORIDA Lic. # 44167

WALTER A. TILLIT JR. LICENSE No. 44167 STATE OF FLORIDA PROFESSIONAL ENGINEER

P.E. SEAL/SIGNATURE/DATE

PRODUCT REVISED
as complying with the Florida Building Code
Acceptance No. 12-0926.05
Expiration Date 2/17/15
By [signature]
Miami Dade Product Control

MIAMI-DADE COUNTY

SERIES MSD-375 ALUMINUM MEDIUM STILE ENTRANCE DOOR (WET GLAZED) LARGE & SMALL MISSILE IMPACT

Oldcastle BuildingEnvelope™
803 Airport Rd - Terrell, TX 75160
www.OldcastleBE.com - Phone 800-869-4567

REV. No	DESCRIPTION	DATE	REV. No	DESCRIPTION	DATE
1	OLD 12-157	04/04/13	3		
2			4		

A.G.
DRAWN BY:

04/04/13
DATE

13-034
DRAWING No

SHEET 3 OF 24

BILL OF MATERIALS

ITEM No.	PART NUMBER	DESCRIPTION	DIMENSIONS	MATERIAL	MANUFACTURER	NOTES
1.	AS-6	ADJUSTABLE ASTRAGAL ASSEMBLY	.331" X 1.562" X .076"	6063-T6 ALUMINUM	OBE	
2.	CB-21	CORNER BLOCK	2.130" X 1.44" X .25"	6063-T5 ALUMINUM	OBE	4.437" LONG
3.	CB-38	DOOR CORNER BLOCK	2.130" X 1.44" X .25"	6063-T5 ALUMINUM	OBE	1.23" LONG
4.	CB-61	DOOR CORNER BLOCK	2.130" X 1.44" X .25"	6063-T5 ALUMINUM	OBE	8" LONG
4A.	CB-71	DOOR CORNER BLOCK	2.130" X 1.44" X .25"	6063-T5 ALUMINUM	OBE	6" LONG
5.	D-6	DOOR STILE MS-375	3.75" X 1.75" X .125"	6063-T5 ALUMINUM	OBE	
6.	D-21	HORIZONTAL MID-RAIL/TOP RAIL	6.50" X 1.71" X .125"	6063-T5 ALUMINUM	OBE	
7.	D-24	DOOR INACTIVE MEETING STILE MS-375	3.75" X 1.75" X .125"	6063-T5 ALUMINUM	OBE	
8.	D-38	DOOR TOP RAIL	3.00" X 1.71" X .125"	6063-T5 ALUMINUM	OBE	
9.	D-62	MID-RAIL ADAPTER	1.429" X 1.552" X .062"	6063-T5 ALUMINUM	OBE	
10.	D-69	DOOR ACTIVE MEETING STILE MS-375	3.614" X 1.75" X .125"	6063-T5 ALUMINUM	OBE	
11.	D-61	10" ADA BOTTOM RAIL	10.00" X 1.71" X .125"	6063-T6 ALUMINUM	OBE	
11A.	D-71	8" BOTTOM RAIL	8.00" X 1.71" X .125"	6063-T6 ALUMINUM	OBE	
12.	D-118	DOOR BOTTOM RAIL SWEEP ASSEMBLY	.812" X .302" X .125"	6063-T5 ALUMINUM	OBE	CUT TO DOOR WIDTH MINUS 5/8"
13.	D-134-3	PANIC DOOR STOP	.344" X 1.484" X 3.00" LONG	6063-T5 ALUMINUM	OBE	
14.	D-152	SCREW ATTACHED DOOR GLASS STOP	1.00" X .762" X .125"	6063-T6 ALUMINUM	OBE	ATTACH 12" ON CENTER
15.	FG-5206	HEAD HORIZONTAL/TRANSOM HEADER	2.50" X 4.98" X .080"	6063-T6 ALUMINUM	OBE	
15A.	FG-5204	HEAD HORIZONTAL/TRANSOM HEADER	2.50" X 4.98" X .080"	6063-T6 ALUMINUM	OBE	
16.	FG-5113	HEAD FILLER	.50" X 1.69" X .050"	6063-T5 ALUMINUM	OBE	
18.	FG-5163	SNAP-IN DOOR STOP	.746" X 1.357" X .062"	6063-T6 ALUMINUM	OBE	
19.	FG-5167	FLAT FILLER	.778" X 4.66" X .080"	6063-T6 ALUMINUM	OBE	RUNS FULL LENGTH
20.	FG-5168	DOOR JAMB	2.50" X 5.00" X .125"	6063-T6 ALUMINUM	OBE	
21.	FG-5198	TRANSOM SASH	1.00" X 1.940" X .062"	6063-T6 ALUMINUM	OBE	
22.	FG-5197	DOOR HEADER/TRANSOM BAR	2.50" X 4.90" X .080"	6063-T6 ALUMINUM	OBE	
23.	S-83	SNAP-IN DOOR GLASS STOP	.812" X .762" X .078"	6063-T6 ALUMINUM	OBE	
24.	TH-57	THRESHOLD	.50" X 5.625" X .125"	6063-T5 ALUMINUM	OBE	
25.	D-125	DOOR STOP WEATHERING	.125" SPACE	SANTOPRENE	UNIVERSAL RUBBER	
26.	FG-1133	GLAZING GASKET	.197" SPACE	EPDM	VARIES	70 DUROMETER
27.	FS-2	ATTACH D-118 SWEEP TO DOOR BOTTOM	#8 X ⅜" PPHSMS	STEEL	VARIES	
28.	FS-7	ATTACH RAILS TO CORNER BLOCKS	#10 X ¾" PFH	STEEL	VARIES	
29.	FS-8	SPLINE ASSEMBLY SCREW	#14 X 1" HHSTS	STEEL	VARIES	
30.	FS-114	ATTACH D-152 TO DOOR	#8 X ⅜" PPHSMS	STEEL	VARIES	SPACED @ 12" O.C.
31.	SM-5601	JOINT SEALANT TAPE	.125" X .50" VARIES	BUTYL	SCHNEE-MOREHEAD	
32.	WP-085	ADJUSTABLE ASTRAGAL WEATHERING	VARIABLE SPACE	WOOL PILE	SCHLEGEL	
33.	FS-56	ATTACH D-134-2 PANIC STOP	#12 X 3/4" PFHSMS	STEEL	VARIES	
34.	FS-49	ADJUSTABLE ASTRAGAL SCREW	#8 X 1/2" PPHSMS	STEEL	VARIES	
35.	FG-5188	SPACER GASKET	.25" X .25"	EPDM	VARIES	85 DUROMETER
36.	HP-17	SETTING BLOCK	1.316" X .25" X 4" LONG	EPDM	VARIES	90 DUROMETER
36A.	FG-5229	SETTING BLOCK	.634" X .642" X 4" LONG	EPDM	VARIES	85 DUROMETER

FLORIDA BUILDING CODE (High Velocity Hurricane Zone)

©2013 TILTECO, INC

TILTECO INC.
TILLIT TESTING & ENGINEERING COMPANY
6355 N.W. 36th. St. Ste. 305, VIRGINIA GARDENS, FL 33166
Phone : (305)871-1530 . Fax : (305)871-1531
e-mail: tilteco@aol.com
EB-0006719
WALTER A. TILLIT Jr. P.E.
FLORIDA Lic. # 44167

REV. No	DESCRIPTION	DATE
1	OLD 12-157	06/04/13
2	GENERAL	05/21/13
3		
4		

SERIES MSD-375 ALUMINUM MEDIUM STILE ENTRANCE DOOR (WET GLAZED)
LARGE & SMALL MISSILE IMPACT

Oldcastle BuildingEnvelope™
803 Airport Rd - Terrell, TX 75160
www.OldcastleBE.com - Phone 800-869-4567

A.G. DRAWN BY:
04/04/13 DATE
13-034 DRAWING No
SHEET 4 OF 24

WALTER A. TILLIT JR. LICENSE No. 44167 STATE OF FLORIDA PROFESSIONAL ENGINEER
SEAL/SIGNATURE/DATE

PRODUCT REVISED
as complying with the Florida Building Code
Acceptance No. 12-0726.05
Expiration Date 2/17/15
By Chris L. Lam
Miami Dade Product Control

MIAMI-DADE COUNTY

BILL OF MATERIALS (CONTINUED)

ITEM No.	PART NUMBER	DESCRIPTION	DIMENSIONS	MATERIAL	MANUFACTURER	NOTES
37.	995 SEALANT	STRUCTURAL SILICONE	FILL SPACE	SILICONE	DOW CORNING	
38.	921	USED AS PERIMETER SEALANT	FILL SPACE	POLYURETHANE	VULKEM	
40.	FS-39	ATTACH CORNER BLOCK TO STILES	¼" X 20 X ¾": HHMS	STEEL	VARIES	
41.	FG-5000-PP1	DOOR SETTING BLOCK	⅛" X ¾" X 4"	EPDM	VARIES	
42.	FG-5172	DOOR HEADER-OFFSET ARM	2.50" X 4.98" X .135"	6063-T6 ALUMINUM	OBE	
42A.	FG-5235	DOOR HEADER/TRANSOM BAR	2.50" X 4.98" X .135"	6063-T6 ALUMINUM	OBE	
43.	DS-104	OFFSET ARM COVER	1.188" X 1.625" X .094"	6063-T6 ALUMINUM	OBE	
44.	FASTENER	ATTACH DS-104 TO FG-5172	#10 X 2" FHPSMS	STEEL	VARIES	SINGLE DOOR: 1 EA. 6" FROM LOCK STILE PAIR OF DRS: 1 EA. 6" EACH SIDE OF DR C/L
45.	D-120	DOOR WEATHERING STRIP	VARIABLE SPACE	VINYL	OBE	DOOR WIDTH MINUS 5/8"
46.	FG-5185	SPACER GASKET	.25" X .25"	SILICONE	VARIES	
47.	FG-5190	GLASS STOP	2.01" X 1.39" X .080"	6063-T6 ALUMINUM	OBE	
50.	FG-5181	TRANSOM SASH	1.00" X 2.69" X .062"	6063-T5 ALUMINUM	OBE	
51.	FS-55	ATTACH SC-1 CLIP	#10 X 1/2" PH ROUND	STEEL	VARIES	9" O.C.
52.	FG-5182	TRANSOM GLASS STOP	1.00" X .767" X .062"	6063-T5 ALUMINUM	OBE	
53.	DS-104	DOOR STOP	1.625" X 1.188" X .094"	6063-T5 ALUMINUM	OBE	USES SC-1 CLIP
56.	CW-998	BULB GASKET FOR FILLER	VARIES	FOAM-TITE	AMESBURY	
57.	FG-5000-PP-8	DOOR JAMB STL REINFORCING	1 1/4" X 4 9/16" X 1/4"	A-36 STEEL	VARIES	FULL LENGTH OF MULLION. COAT RICH PRIMER
58.	FS-38	ATTACH STL. REINFORCEMENT	1/4"-20 X 1/2" HH TYPE "F"	STEEL	VARIES	
59.	SC-1	STAINLESS STEEL CLIP	.281" X .968" X .032"	STAINLESS STEEL	OBE	9" O.C.
60.	FG-5000-FP-17	ANCHOR PLATE	1.153" X .478" X .080"X 8" LONG	6063-T5 ALUMINUM	OBE	USED @ 22A.
62.	FG-5000-FP-19	ANCHOR PLATE	.1.708" X .375" X .080"X 8" LONG	6063-T5 ALUMINUM	OBE	USED @ 24
63.	FG-5000-FP-20	ANCHOR PLATE	.1.215" X .264" X .078"X 8" LONG	6063-T5 ALUMINUM	OBE	USED @ 42
64.	D-243-01	STILE REINFORCEMENT SLEEVE	3.375" X 1.480" X .093"X 5.26LG	6063-T6 ALUMINUM	OBE	USED AT DOOR STILE SILL WITH REGENT HARDWARE
65.	D-244-01	STILE REINFORCEMENT SLEEVE	3.109" X 1.480" X .093"X 5.26LG	6063-T6 ALUMINUM	OBE	USED AT DOOR STILE SILL WITH REGENT HARDWARE
66.	D-247-01	STILE REINFORCEMENT SLEEVE	3.364" X 1.480" X .104"X 5.26LG	6063-T6 ALUMINUM	OBE	USED AT DOOR STILE SILL WITH REGENT HARDWARE

FLORIDA BUILDING CODE (High Velocity Hurricane Zone)

©2013 TILTECO, INC

TILTECO INC.
TILLIT TESTING & ENGINEERING COMPANY
6355 N.W. 36th. St., Ste. 305, VIRGINIA GARDENS, FL 33166
Phone : (305)871-1530 , Fax : (305)871-1531
e-mail: tilteco@aol.com
EB-0006719
WALTER A. TILLIT Jr., P.E.
FLORIDA Lic. # 44167

SERIES MSD-375 ALUMINUM MEDIUM STILE ENTRANCE DOOR (WET GLAZED)
LARGE & SMALL MISSILE IMPACT

Oldcastle BuildingEnvelope™
803 Airport Rd - Terrell, TX 75160
www.OldcastleBE.com - Phone 800-869-4567

REV. No	DESCRIPTION	DATE
1	OLD 12-157	04/04/13
2	GENERAL	05/21/13
3		
4		

A.G.
DRAWN BY:

04/04/13
DATE

13-034
DRAWING No

SHEET 5 OF 24

WALTER A. TILLIT JR. LICENSE No. 44167 STATE OF FLORIDA PROFESSIONAL ENGINEER

P.E. SEAL/SIGNATURE/DATE

PRODUCT REVIEWED
as complying with the Florida
Building Code
Acceptance No. 12-0526.05
Expiration Date 2/15/17
By Chas. L. Chase
Miami Dade Product Control

MIAMI-DADE COUNTY

HARDWARE SCHEDULE 3'-6" X 8'-0" SINGLE DOOR

DOOR SIZE	3'-6" X 8'-0" SINGLE	
LOCKING DEVICE:	SERIES	NOTES:
ADAMS-RITE	1850-505	3-POINT LOCK
EXIT DEVICES:		
VON DUPRIN	9927	SURFACE PANIC
VON DUPRIN	9947	CONCEALED PANIC
JACKSON	2086	CONCEALED PANIC
JACKSON	1286	CONCEALED PANIC
SARGENT	8410	CONCEALED PANIC
REGENT	5770	CONCEALED PANIC

HARDWARE DESCRIPTION	PART NUMBER	QTY	MANUFACTURER
CLOSER OPTIONS: SURFACE MOUNTED	VARIES	1	VARIES
CONCEALED OVERHEAD	21-2111 HVY DUTY WITH OFFSET SLIDE-ARM	1	JACKSON
BUTT HINGE 4 1/2" X 4"	BH-1M	3	REGENT
PULL HANDLE	PH-10	1	OBE
PUSH BAR	PB-11	1	OBE
CYLINDER (ACTIVE)	CY-1	1	OBE
KEY CONTROL (ACTIVE) FOR SARGENT	106	1	SARGENT
THUMB TURN (ACTIVE) OPTIONAL	CY-3	1	OBE
CYLINDER (ACTIVE) FOR VON DUPRIN EXIT	CY-5		OBE
LOCK (ACTIVE)	AR-1850-505-3PT	1	ADAMS-RITE
LOCK INDICATOR (ACTIVE) OPTIONAL	AR-4089	1	ADAMS-RITE
PANIC STOP	D-134-2	1	OBE
THRESHOLD	TH-57	1	OBE
DOOR BOTTOM SWEEP	D118/D120	1	OBE
OPTIONAL HINGE:			
TOP PIVOTS	OP-6 & OP-7	1	INTERNATIONAL
INTERMIDIATE PIVOT	M-19	1	RIXON
BOTTOM PIVOT	OP-9 & OP-10	1	INTERNATIONAL
CONTINUOUS GEAR HINGE	224 HD	1	ROTON
OPTIONAL THRESHOLD	TH-43	1	OBE

FLORIDA BUILDING CODE (High Velocity Hurricane Zone)

©2013 TILTECO, INC

TILTECO INC.
TILLIT TESTING & ENGINEERING COMPANY
6355 N.W. 36th. St., VIRGINIA GARDENS, FL 33166
Phone : (305) 871-1530 , Fax : (305)871-1531
e-mail: tilteco@aol.com
EB-0006719
WALTER A. TILLIT Jr. P.E.
FLORIDA Lic. # 44167

SERIES MSD-375 ALUMINUM MEDIUM STILE ENTRANCE DOOR (WET GLAZED)
LARGE & SMALL MISSILE IMPACT

Oldcastle BuildingEnvelope™
803 Airport Rd - Terrell, TX 75160
www.OldcastleBE.com - Phone 800-869-4567

REV. No	DESCRIPTION	DATE	REV. No	DESCRIPTION	DATE
1	OLD 12-157	04/04/13	3		
2			4		

A.G.
DRAWN BY:

04/04/13
DATE

13-034
DRAWING No

SHEET 6 OF 24

WALTER A. TILLIT JR.
LICENSE
No. 44167
STATE OF FLORIDA
PROFESSIONAL ENGINEER

P.E. SEAL/SIGNATURE/DATE

PRODUCT REVISED
as complying with the Florida Building Code
Acceptance No 12-0926.05
Expiration Date 2/17/15
By [illegible]
Miami Dade Product Control

MIAMI-DADE COUNTY

HARDWARE SCHEDULE 7'-0" X 8'-0" PAIR DOOR

DOOR SIZE	7'-0" X 8'-0" PAIR	
LOCKING DEVICE:	SERIES	NOTES:
ADAMS-RITE	1850-505	3-POINT LOCK
EXIT DEVICES:		
VON DUPRIN	9927	SURFACE PANIC
VON DUPRIN	9947	CONCEALED PANIC
JACKSON	2086	CONCEALED PANIC
JACKSON	1286	CONCEALED PANIC
SARGENT	8410	CONCEALED PANIC
REGENT	5770	CONCEALED PANIC

HARDWARE DESCRIPTION	PART NUMBER	QTY	MANUFACTURER
CLOSER OPTIONS: SURFACE MOUNTED	VARIES	1	VARIES
CONCEALED OVERHEAD	21-2111 HVY DUTY WITH OFFSET SLIDE-ARM	1	JACKSON
BUTT HINGE 4 1/2" X 4"	BH-1M	3	REGENT
PULL HANDLE	PH-10	1	OBE
PUSH BAR	PB-11	1	OBE
CYLINDER (ACTIVE)	CY-1	1	OBE
KEY CONTROL (ACTIVE) FOR SARGENT	106	1	SARGENT
THUMB TURN (ACTIVE) OPTIONAL	CY-3	1	OBE
CYLINDER (ACTIVE) FOR VON DUPRIN EXIT	CY-5		OBE
LOCK (ACTIVE)	AR-1850-505-3PT	1	ADAMS-RITE
LOCK INDICATOR (ACTIVE) OPTIONAL	AR-4089	1	ADAMS-RITE
FLUSH BOLT (INACTIVE)	FB-1201-VRM		INTERNATIONAL
FLUSH BOLT (INACTIVE)	FB-1201-VRM-96		INTERNATIONAL
PANIC STOP	D-134-2	1	OBE
THRESHOLD	TH-57	1	OBE
DOOR BOTTOM SWEEP	D118/D120	1	OBE
OPTIONAL HINGE:			
TOP PIVOTS	OP-6 & OP-7	1	INTERNATIONAL
INTERMIDIATE PIVOT	M-19	1	RIXON
BOTTOM PIVOT	OP-9 & OP-10	1	INTERNATIONAL
CONTINUOUS GEAR HINGE	224 HD	1	ROTON
OPTIONAL THRESHOLD	TH-43	1	OBE

FLORIDA BUILDING CODE (High Velocity Hurricane Zone)

©2013 TILTECO, INC

SERIES MSD-375 ALUMINUM MEDIUM STILE ENTRANCE DOOR (WET GLAZED)
LARGE & SMALL MISSILE IMPACT

Oldcastle BuildingEnvelope™
803 Airport Rd - Terrell, TX 75160
www.OldcastleBE.com - Phone 800-869-4567

REV. No	DESCRIPTION	DATE	REV. No	DESCRIPTION	DATE
1	OLD 12-157	04/04/13	3		
2			4		

A.G.
DRAWN BY:

04/04/13
DATE

13-034
DRAWING No

SHEET 7 OF 24

TILTECO INC.
TILLIT TESTING & ENGINEERING COMPANY
6355 N.W. 36th. St., Ste. 305, VIRGINIA GARDENS, FL 33166
Phone : (305)871-1550 Fax: (305)871-1551
e-mail: tilteco@aol.com
EB-0006719
WALTER A. TILLIT Jr. P.E.
FLORIDA Lic. # 44167

WALTER A. TILLIT JR. LICENSE No. 44167 STATE OF FLORIDA PROFESSIONAL ENGINEER

P.E. SEAL/SIGNATURE/DATE

PRODUCT REVISED
as complying with the Florida Building Code
Acceptance No 12-0926.03
Expiration Date 2/17/15
By
Miami Dade Product Control

MIAMI-DADE COUNTY

TYPICAL GLAZING DETAILS

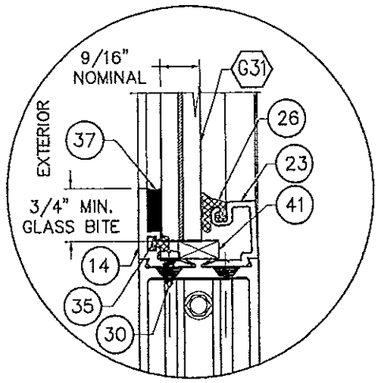

GLASS TYPE G31

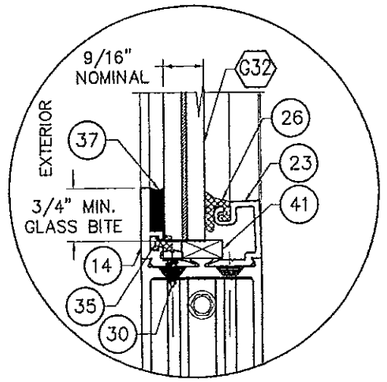

GLASS TYPE G32

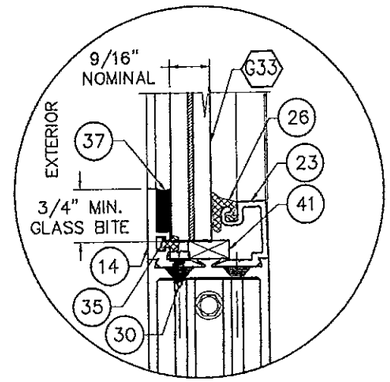

GLASS TYPE G33

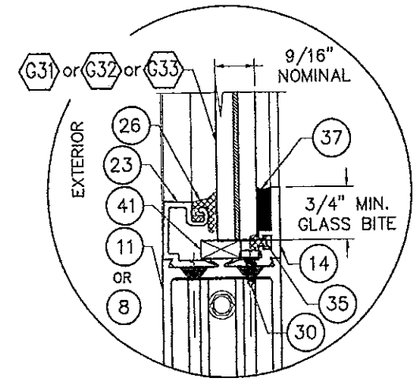

APPLICABLE ALTERNATE DETAIL WITH DOOR GLASS STOPS REVERSED FOR ALL GLASS TYPES

GLASS SCHEDULE

GLASS LABEL	GLASS COMPOSITION	INTERLAYER MANUFACTURER NAME	MAXIMUM D.L.O. (In)
G31	9/16" OVERALL THICKNESS LAMINATED GLASS CONSISTING OF TWO 1/4" H.S. GLASS, AND A 0.090" SAFLEX PVB INTERLAYER	SOLUTIA	32 5/16" x 82 3/16"
G32	9/16" OVERALL THICKNESS LAMINATED GLASS CONSISTING OF TWO 1/4" H.S. GLASS, AND A 0.100" SAFLEX PVB INTERLAYER	SOLUTIA	
G33	9/16" OVERALL THICKNESS LAMINATED GLASS CONSISTING OF TWO 1/4" H.S. GLASS, AND A 0.075" VANCEVA INTERLAYER	EASTMAN CHEMICAL COMPANY	

TYPICAL DOOR GLASS SIZE= DLO +1 1/2"

FLORIDA BUILDING CODE (High Velocity Hurricane Zone)

©2013 TILTECO, INC

TILTECO INC.
TILLIT TESTING & ENGINEERING COMPANY
6355 N.W. 36th. St. Ste. 305, VIRGINIA GARDENS, FL 33166
Phone : (305)871-1530 , Fax : (305)871-1531
e-mail: tilteco@aol.com
EB-0006719
WALTER A. TILLIT JR. P.E.
FLORIDA Lic. # 44167

SERIES MSD-375 ALUMINUM MEDIUM STILE ENTRANCE DOOR (WET GLAZED) LARGE & SMALL MISSILE IMPACT

Oldcastle BuildingEnvelope™
803 Airport Rd - Torrell, TX 75160
www.OldcastleBE.com - Phone 800-869-4567

REV. No.	DESCRIPTION	DATE
1	GLD 12-157	04/04/13
2	GENERAL	05/21/13

REV. No.	DESCRIPTION	DATE
3		
4		

A.G. DRAWN BY:
04/04/13 DATE
13-034 DRAWING No
SHEET 8 OF 24

WALTER A. TILLIT JR. LICENSE No 44167 STATE OF FLORIDA PROFESSIONAL ENGINEER

P.E. SEAL/SIGNATURE/DATE

PRODUCT REVISED
as complying with the Florida Building Code
Acceptance No. 12-0526.07
Expiration Date 2/17/15
By
Miami Dade Product Control

MIAMI-DADE COUNTY

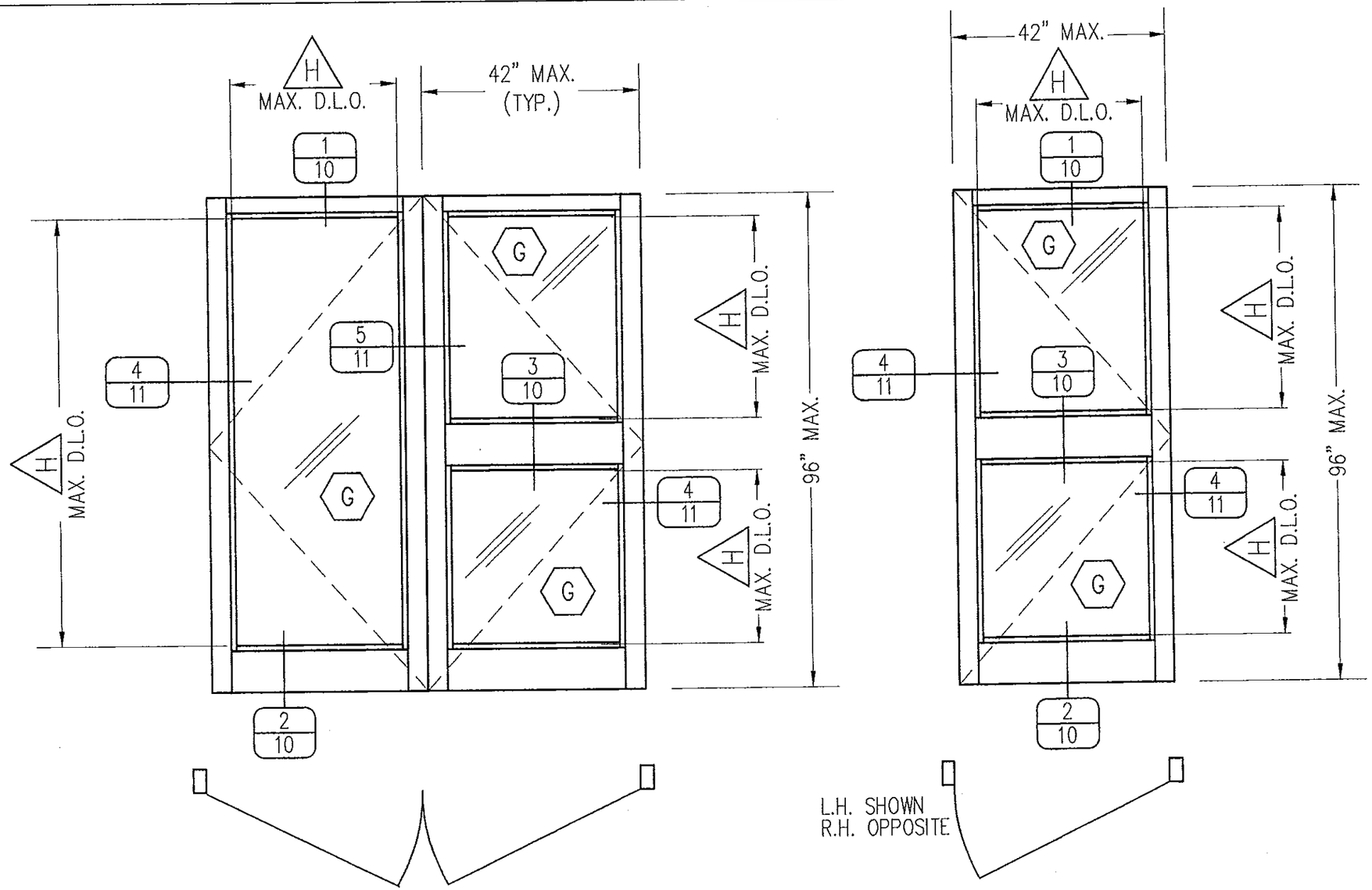

DOUBLE PANEL

SINGLE PANEL

TYPICAL PANEL ELEVATIONS FOR MSD-375 IMPACT DOOR (WET GLAZED)

FOOT NOTES:

(G) FOR GLAZING DETAILS AND GLASS SCHEDULE SEE SHEET 8.

(H) FOR MAXIMUM DAYLIGHT OPENING (D.L.O.) SEE SCHEDULE ON SHEET 8.

FLORIDA BUILDING CODE (High Velocity Hurricane Zone)

©2013 TILLITECO, INC

TILLITECO INC.
TILLIT TESTING & ENGINEERING COMPANY
6355 N.W. 36th, St. Ste. 305, VIRGINIA GARDENS, FL 33166
Phone : (305)871-1530 , Fax : (305)871-1531
e-mail: tilteco@aol.com
EB-0006719
WALTER A. TILLIT Jr. P.E.
FLORIDA Lic. # 44167

SERIES MSD-375 ALUMINUM MEDIUM STILE ENTRANCE DOOR (WET GLAZED)
LARGE & SMALL MISSILE IMPACT

Oldcastle BuildingEnvelope™
803 Airport Rd - Terrell, TX 75160
www.OldcastleBE.com - Phone 800-869-4567

REV. No.	DESCRIPTION	DATE	REV. No.	DESCRIPTION	DATE
1	OLD 12-157	04/04/13	3		
2			4		

A.G.
DRAWN BY:

04/04/13
DATE

13-034
DRAWING No

SHEET 9 OF 24

WALTER A. TILLIT JR. LICENSE No. 44167 STATE OF FLORIDA PROFESSIONAL ENGINEER

P.E. SEAL/SIGNATURE/DATE

PRODUCT REVISED
as complying with the Florida Building Code
Acceptance No. 12-0926.05
Expiration Date 2/17/15
By
Miami Dade Product Control

MIAMI-DADE COUNTY

DOOR'S TOP AND BOTTOM RAILS AND HORIZONTAL MID-RAIL DETAILS (SIDE VIEWS)

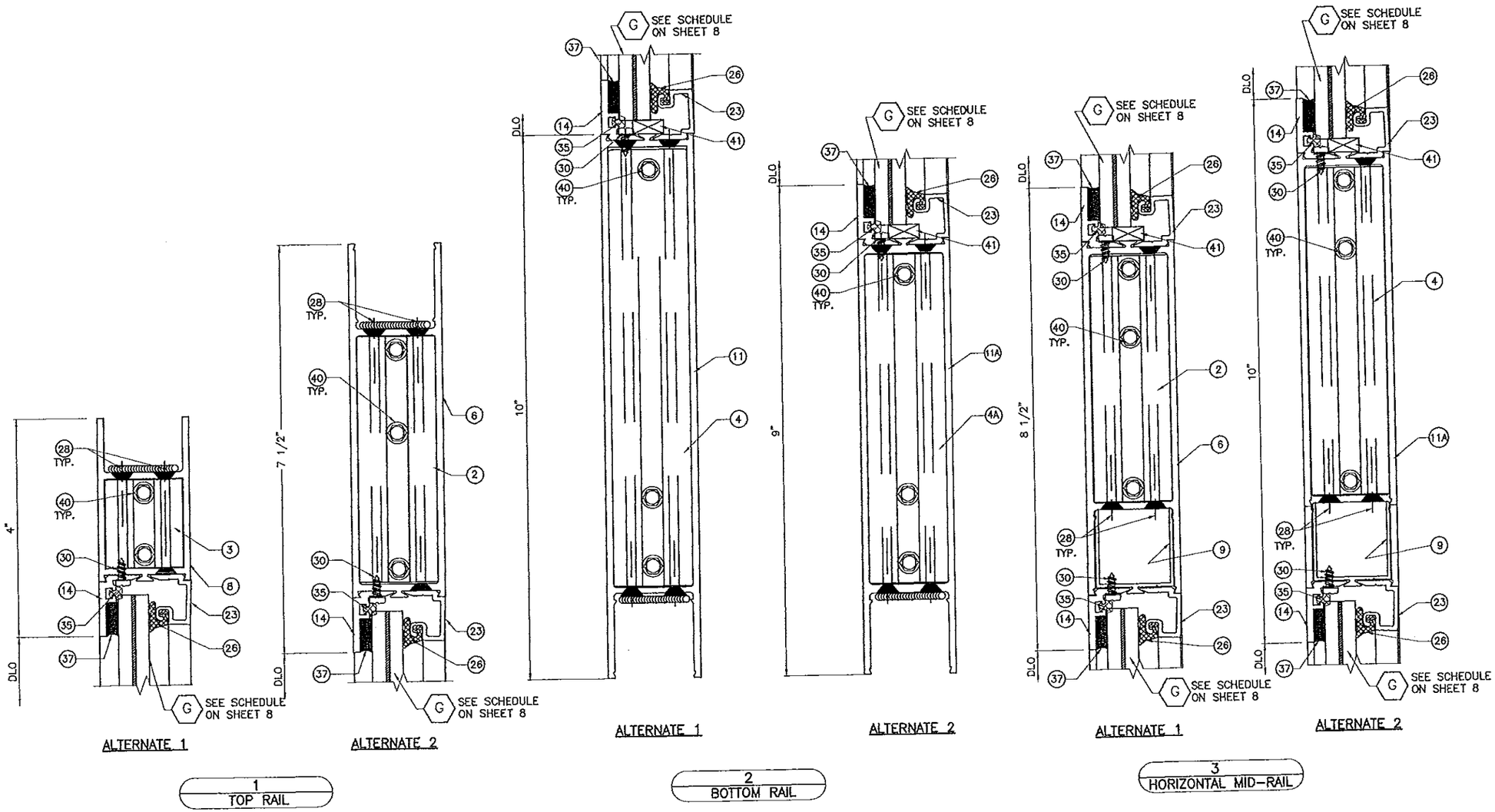

FLORIDA BUILDING CODE (High Velocity Hurricane Zone)

©2013 TILTECO, INC

TILTECO INC.
TILLIT TESTING & ENGINEERING COMPANY
6355 N.W. 36th. St., Ste. 305, VIRGINIA GARDENS, FL 33166
Phone : (305)871-1530 , Fax : (305)871-1531
e-mail: tilteco@aol.com
EB-0006719
WALTER A. TILLIT Jr. P.E.
FLORIDA Lic. # 44167

SERIES MSD-375 ALUMINUM MEDIUM STILE ENTRANCE DOOR (WET GLAZED) LARGE & SMALL MISSILE IMPACT

Oldcastle BuildingEnvelope™
803 Airport Rd - Terrell, TX 75160
www.OldcastleBE.com - Phone 800-869-4567

REV. No	DESCRIPTION	DATE	REV. No	DESCRIPTION	DATE
1	OLD 12-137	05/06/13	3		
2			4		

A.G.
DRAWN BY:

04/04/13
DATE

13-034
DRAWING No

SHEET 10 OF 24

WALTER A. TILLIT JR. LICENSE No. 44167 STATE OF FLORIDA PROFESSIONAL ENGINEER
P.E. SEAL/SIGNATURE/DATE

PRODUCT REVISED
as complying with the Florida Building Code
Acceptance No 12-0526.05
Expiration Date 2/17/15
By
Miami Dade Product Control

MIAMI-DADE COUNTY

DOOR'S JAMB/MEETING STILES AND THRESHOLD CONNECTION DETAILS (PLAN VIEWS)

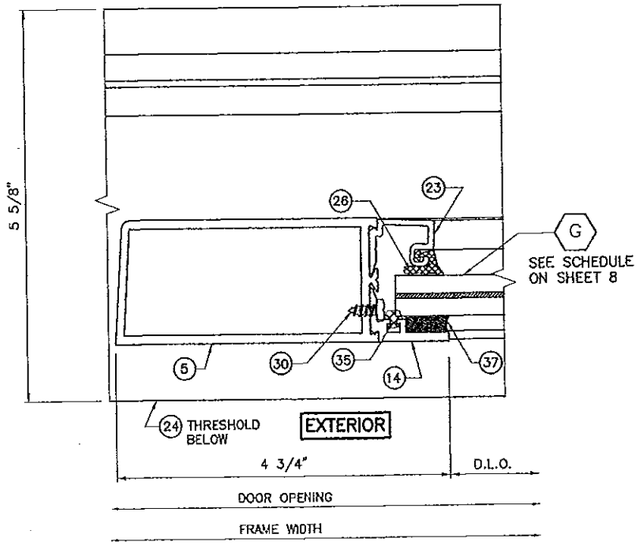

4
JAMB

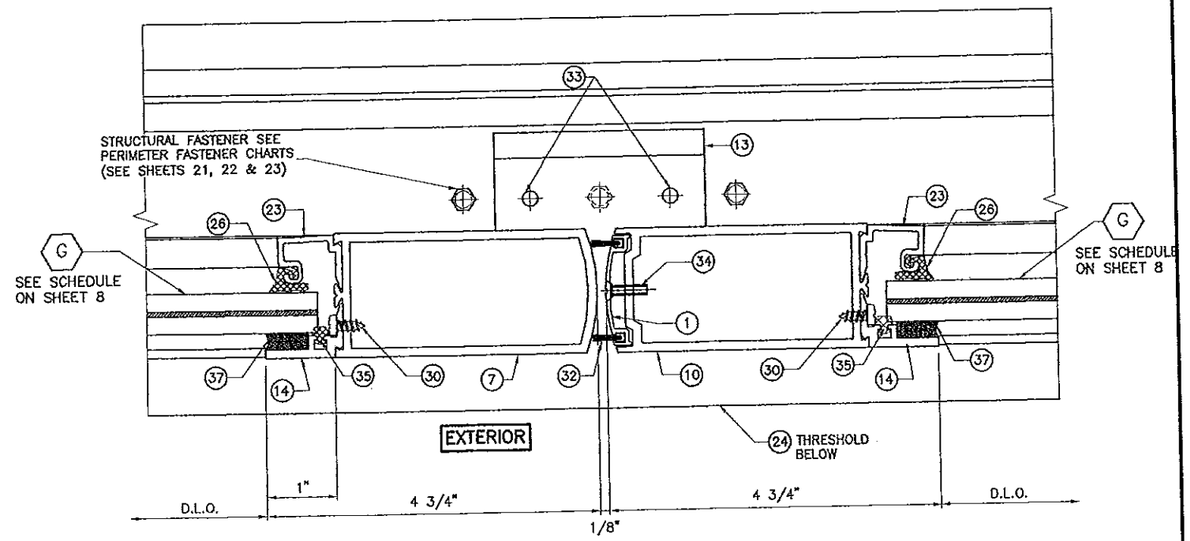

5
MEETING STILES & THRESHOLD CONNECTION

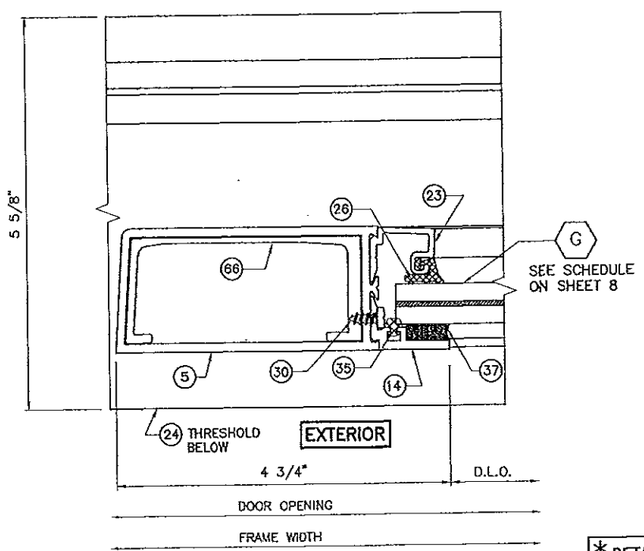

4A*
LOCK STILE AT SINGLE DOOR ONLY

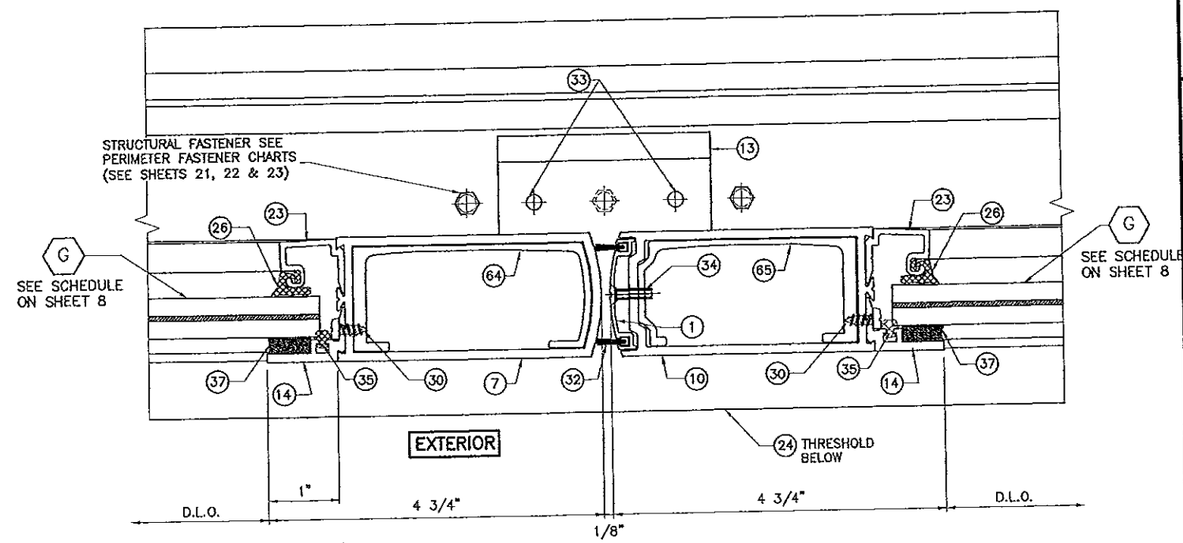

5A*
MEETING STILES & THRESHOLD CONNECTION

* DETAILS 4A AND 5A ARE ONLY REQUIRED AND APPLICABLE WHEN A REGENT 5770 CONCEALED PANIC DEVICE IS USED.

FLORIDA BUILDING CODE (High Velocity Hurricane Zone)

©2013 TILTECO, INC

A.G.
DRAWN BY:

04/04/13
DATE

13-034
DRAWING No

SHEET 11 OF 24

SERIES MSD-375 ALUMINUM MEDIUM STILE ENTRANCE DOOR (WET GLAZED) LARGE & SMALL MISSILE IMPACT

Oldcastle BuildingEnvelope™
803 Airport Rd - Terrell, TX 75160
www.OldcastleBE.com - Phone 800-869-4567

REV. No	DESCRIPTION	DATE	REV. No	DESCRIPTION	DATE
1	OLD 12-157	04/04/13	3		
2			4		

TILTECO INC.
TILLIT TESTING & ENGINEERING COMPANY
6355 N.W. 36th. St., Ste. 305, VIRGINIA GARDENS, FL 33166
Phone : (305)871-2520 Fax : (305)871-1531
e-mail: tilteco@aol.com
EB-0006719
WALTER A. TILLIT Jr. P.E.
FLORIDA Lic. # 44167

WALTER A. TILLIT JR. LICENSE No. 44167 STATE OF FLORIDA PROFESSIONAL ENGINEER

SIGNATURE/DATE
P.E. SEAL

PRODUCT REVISED
as complying with the Florida Building Code
Acceptance No 12-0926.05
Expiration Date 2/17/15
By Miami Dade Product Control

MIAMI-DADE COUNTY

TYPICAL DOOR CORNER ASSEMBLY DETAILS (ISOMETRIC)

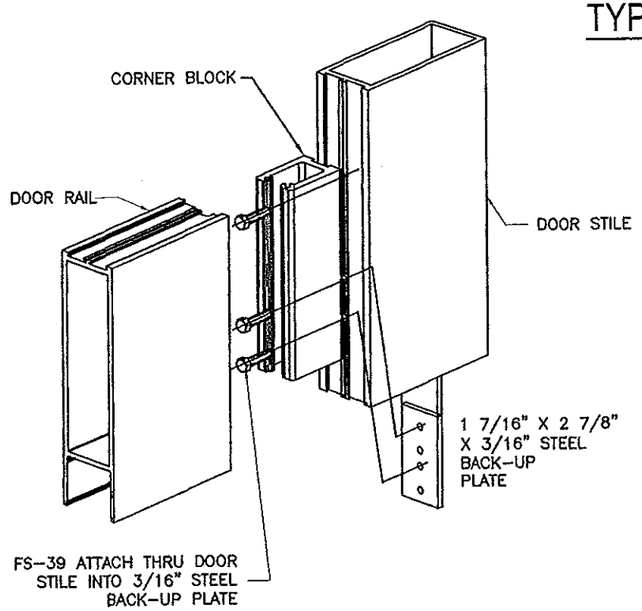

TYPICAL DOOR CORNER ASSEMBLY DETAIL
(ISOMETRIC)

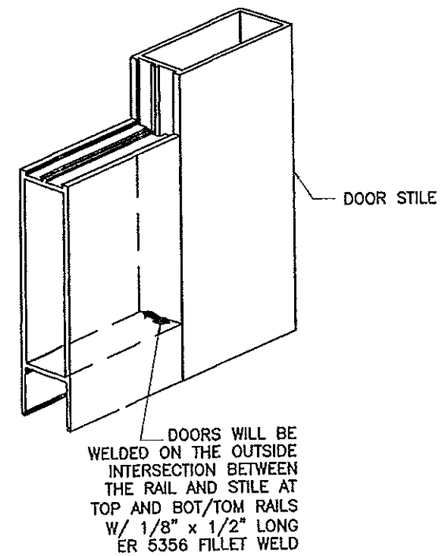

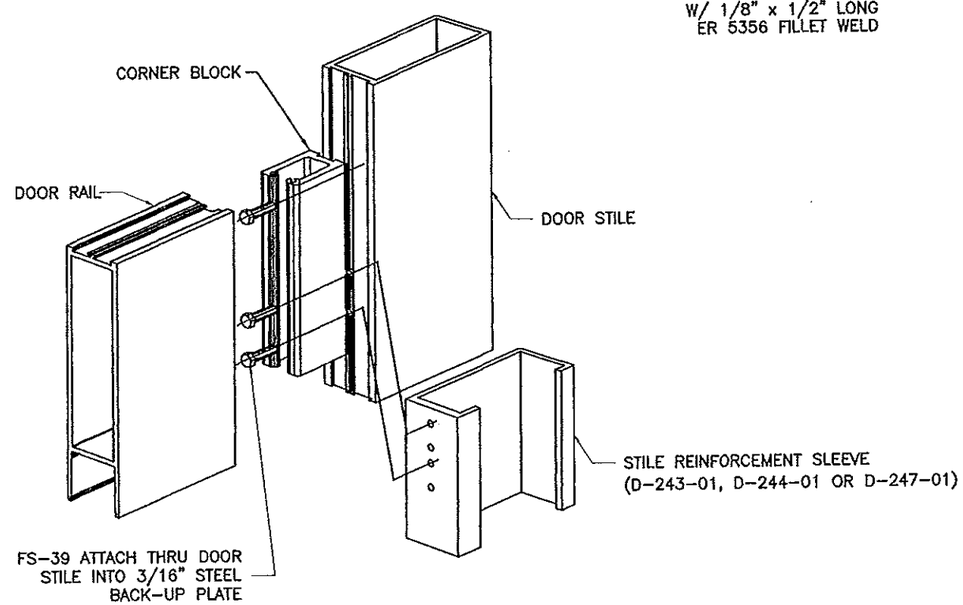

DOOR CORNER ASSEMBLY DETAIL (ISOMETRIC), ONLY
FOR REGENT 5770 CVR PANIC DEVICE HARDWARE

FLORIDA BUILDING CODE (High Velocity Hurricane Zone)

©2013 TILTECO, INC

TILTECO INC.
TILLIT TESTING & ENGINEERING COMPANY
6355 N.W. 36th, 3rd. 751, VIRGINIA GARDENS, FL 33166
Phone : (305)871-1532 , Fax : (305)871-1531
e-mail: tiltecoe@aol.com
EB-0006719
WALTER A. TILLIT Jr. P.E.
FLORIDA Lic. # 44167

WALTER A. TILLIT JR. LICENSE NO. 44167 STATE OF FLORIDA PROFESSIONAL ENGINEER

P.E. SEAL/SIGNATURE/DATE

PRODUCT APPROVAL
Accepted for Statewide Product Approval
Product Approval Accepted for 12-0526.01
Expiration Date 3/17/15

MIAMI-DADE COUNTY

SERIES MSD-375 ALUMINUM MEDIUM STILE ENTRANCE DOOR (WET GLAZED)
LARGE & SMALL MISSILE IMPACT

Oldcastle BuildingEnvelope™
803 Airport Rd - Terrell, TX 75160
www.OldcastleBE.com - Phone 800-869-4567

REV. No	DESCRIPTION	DATE	REV. No	DESCRIPTION	DATE
1	OLD 12-157	04/04/13	3		
2			4		

A.G.
DRAWN BY:

04/04/13
DATE

13-034
DRAWING No

SHEET 11A OF 24

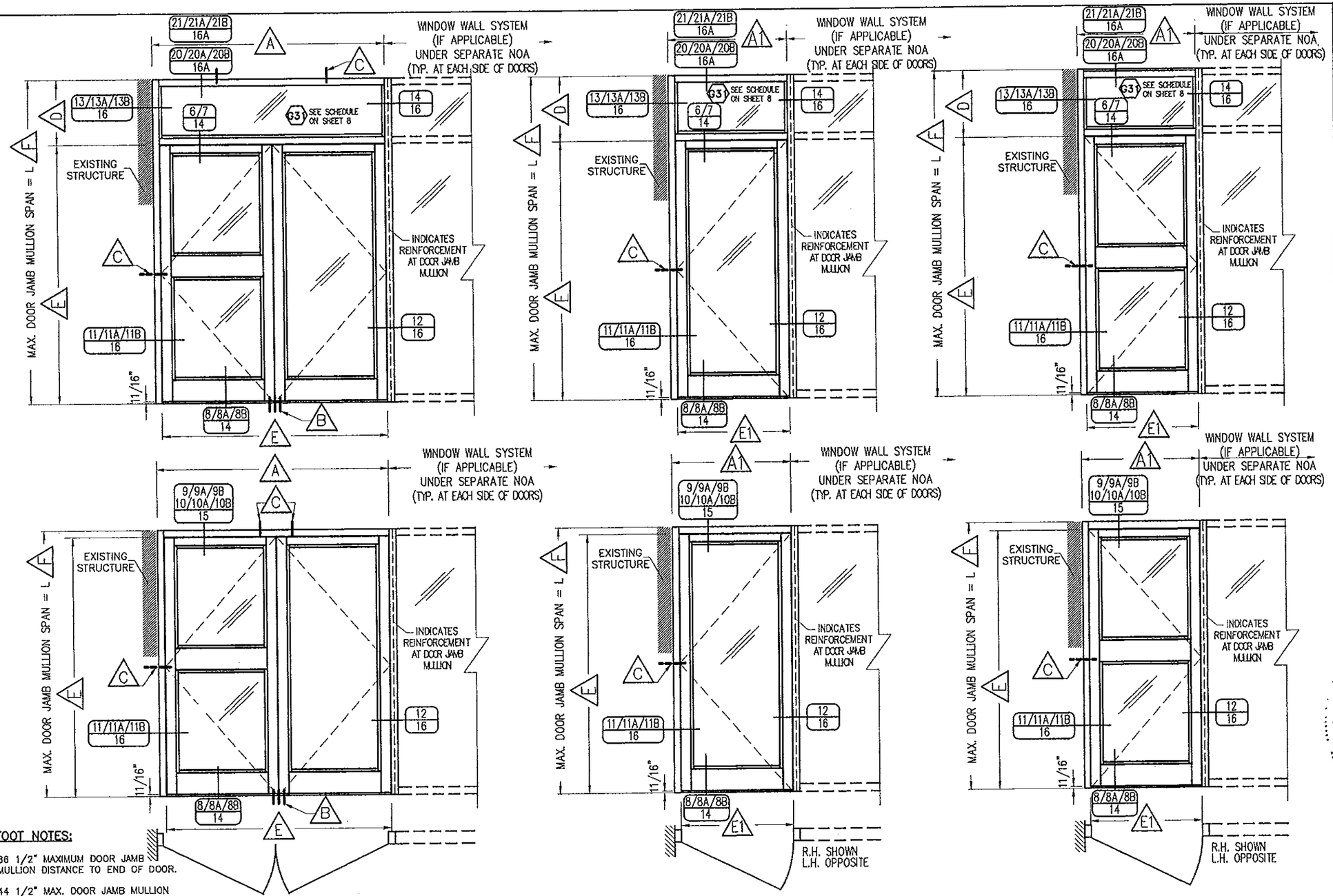

FOOT NOTES:

- A — 86 1/2" MAXIMUM DOOR JAMB MULLION DISTANCE TO END OF DOOR.
- A1 — 44 1/2" MAX. DOOR JAMB MULLION DISTANCE TO END OF DOOR.
- B — FOR THRESHOLD FASTENERS QUANTITY, TYPES AND SPECS SEE SHEETS 21, 22 & 23.
- C — FOR JAMB & HEAD FASTENERS QUANTITY, TYPES AND SPECS SEE SHEETS 21, 22 & 23.
- D — 24 1/4" MAXIMUM TRANSOM HEIGHT.
- E — 96" MAXIMUM DOOR HEIGHT (D.O.) & 84" MAXIMUM DOOR WIDTH (D.O.).
- E1 — 96" MAXIMUM DOOR HEIGHT. (D.O & 42" MAXIMUM DOOR WIDTH. (D.O.).
- F — 120 1/4" MAX. DOOR JAMB MULLION SPAN FOR DOOR W/ TRANSOM & 98 1/2" MAX. DOOR JAMB MULLION SPAN FOR DOOR W/O TRANSOM.

TYPICAL ELEVATIONS FOR MSD-375 IMPACT DOOR (WET GLAZED) CONNECTED TO EXISTING STRUCTURE OR FG-5000 ALUMINUM WINDOW WALL SYSTEM FRAMING

FLORIDA BUILDING CODE (High Velocity Hurricane Zone)

SERIES MSD-375 ALUMINUM MEDIUM STILE ENTRANCE DOOR (WET GLAZED)
LARGE & SMALL MISSILE IMPACT

A.G. — DRAWN BY:
04/04/13 — DATE
13-034 — DRAWING No
SHEET 12 OF 24

Oldcastle BuildingEnvelope™
803 Airport Rd - Terrell, TX 75160
www.OldcastleBE.com - Phone 800-869-4567

REV. No	DESCRIPTION	DATE
1	OLD 12-157	04/04/13
2		
3		
4		

©2013 TILTECO, INC

TILTECO INC.
TILLIT TESTING & ENGINEERING COMPANY
6335 N.W. 36th. St. Ste. 305, VIRGINIA GARDENS, FL 33166
Phone : (305)871-1530 , Fax : (305)871-1531
e-mail: tilteco@aol.com
EB-0006719
WALTER A. TILLIT Jr. P.E.
FLORIDA Lic. # 44167

WALTER A. TILLIT JR. LICENSE No. 44167 STATE OF FLORIDA PROFESSIONAL ENGINEER

P.E. SEAL/SIGNATURE/DATE

PRODUCT REVISED
as complying with the Florida Building Code
Acceptance No 12-0926.05
Expiration Date 2/17/15
By [signature]
Miami Dade Product Control

MIAMI-DADE COUNTY

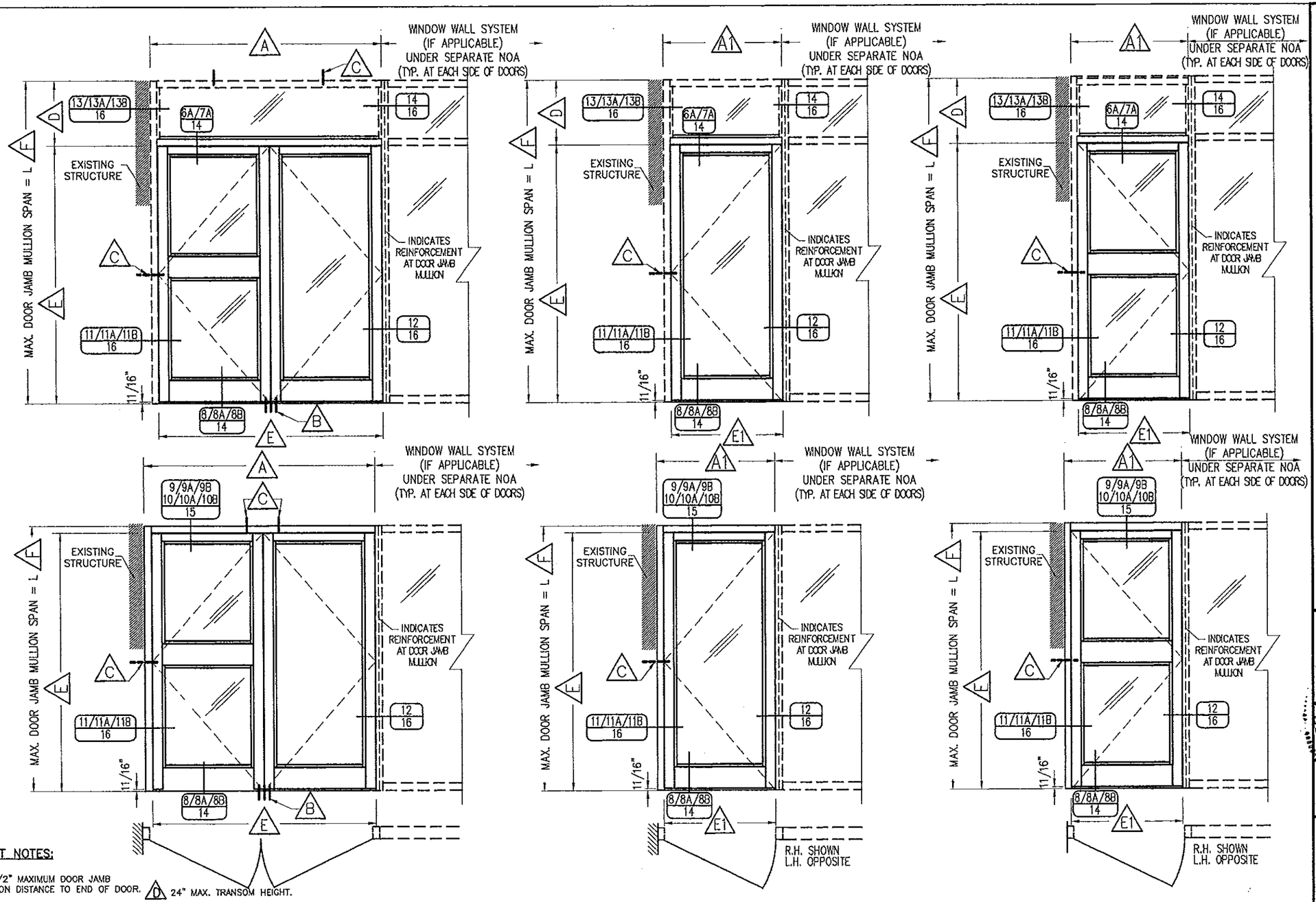

FOOT NOTES:

- A — 74 1/2" MAXIMUM DOOR JAMB MULLION DISTANCE TO END OF DOOR.
- A1 — 38 1/2" MAX. DOOR JAMB MULLION DISTANCE TO END OF DOOR.
- B — FOR THRESHOLD FASTENERS QUANTITY, TYPES AND SPECS SEE SHEETS 21, 22 & 23.
- C — FOR JAMB & HEAD FASTENERS QUANTITY, TYPES AND SPECS SEE SHEETS 21, 22 & 23.
- D — 24" MAX. TRANSOM HEIGHT.
- E — 96" MAX. DOOR HEIGHT (D.O.) & 72" MAX. DOOR WIDTH (D.O.).
- E1 — 96" MAX. DOOR HEIGHT (D.O.) & 36" MAX. DOOR WIDTH (D.O.).
- F — 120" MAX. DOOR JAMB MULLION SPAN FOR DOOR W/ TRANSOM & 98 1/2" MAX. DOOR JAMB MULLION SPAN FOR DOOR W/O TRANSOM.

TYPICAL ELEVATIONS FOR MSD-375 IMPACT DOOR (WET GLAZED) CONNECTED TO EXISTING STRUCTURE OR FG-5100 ALUMINUM WINDOW WALL SYSTEM FRAMING

FLORIDA BUILDING CODE (High Velocity Hurricane Zone)

©2013 TILTECO, INC

TILTECO INC.
TILLIT TESTING & ENGINEERING COMPANY
6355 N.W. 36th. St., Ste. 305, VIRGINIA GARDENS, FL 33166
Phone : (305)871-1530 . Fax : (305)871-1531
e-mail: tilteco@aol.com
EB-0006719
WALTER A. TILLIT Jr. P.E.
FLORIDA Lic. # 44167

SERIES MSD-375 ALUMINUM MEDIUM STILE ENTRANCE DOOR (WET GLAZED) LARGE & SMALL MISSILE IMPACT

Oldcastle BuildingEnvelope™
803 Airport Rd - Terrell, TX 75160
www.OldcastleBE.com - Phone 800-869-4567

REV. No	DESCRIPTION	DATE	REV. No	DESCRIPTION	DATE
1	OLD 12-157	04/04/13	3		
2			4		

A.G. DRAWN BY:

04/04/13 DATE

13-034 DRAWING No

SHEET 13 OF 24

WALTER A. TILLIT JR. LICENSE No. 44167 STATE OF FLORIDA PROFESSIONAL ENGINEER

P.E. SEAL/SIGNATURE/DATE

PRODUCT REVISED as complying with the Florida Building Code
Acceptance No 12-0926.05
Expiration Date 2/17/15
By [signature]
Miami Dade Product Control

MIAMI-DADE COUNTY

TRANSOM BAR CONNECTION DETAILS TO FG-5000 AND FG-5100

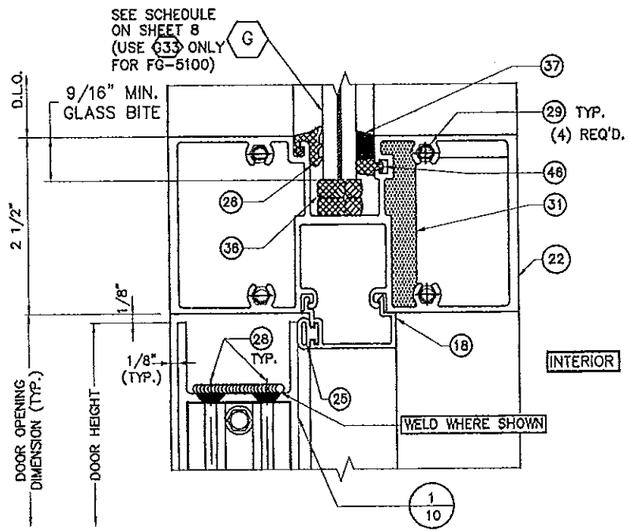

6
TRANSOM BAR

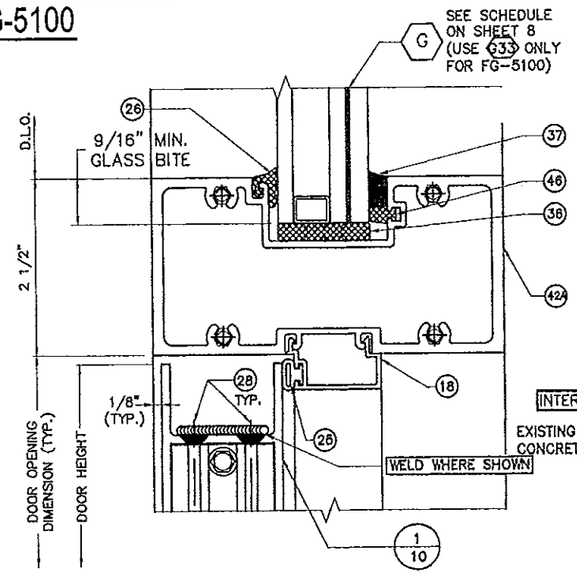

6A
TRANSOM BAR

THRESHOLD CONNECTION DETAILS TO FG-5000, FG-5100, HR-250 & HR-251

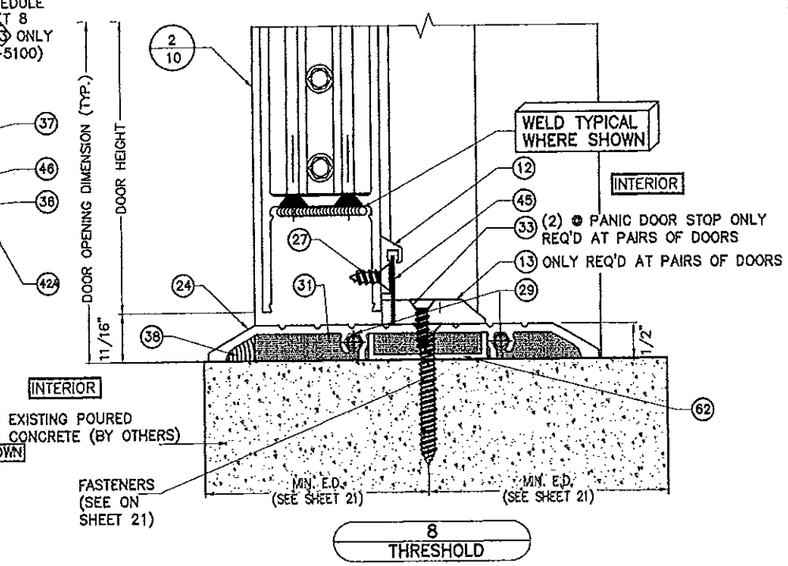

8
THRESHOLD

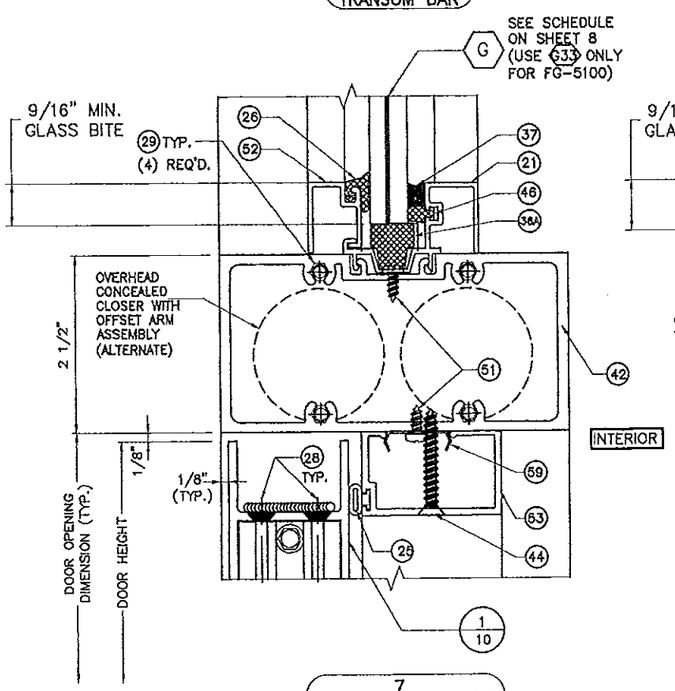

7
TRANSOM BAR CONC.

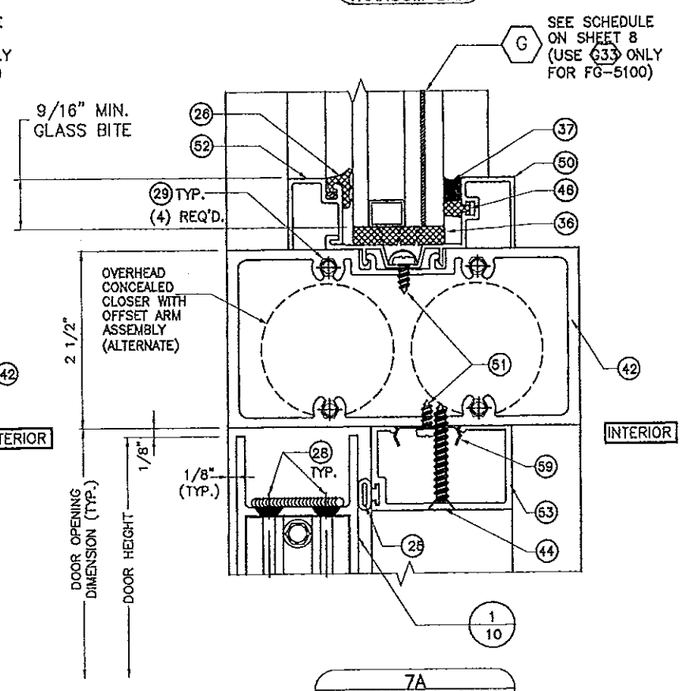

7A
TRANSOM BAR CONC.

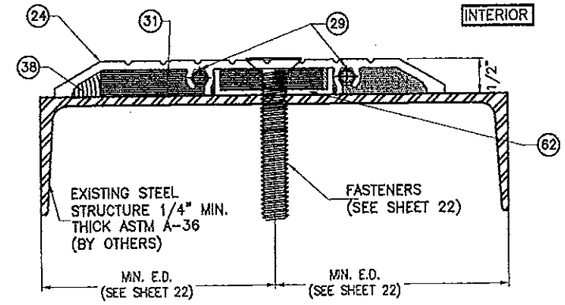

8A
THRESHOLD

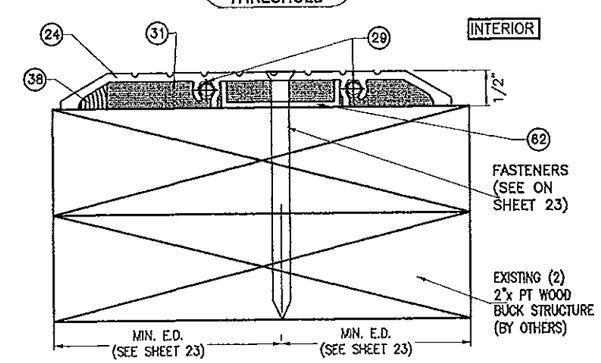

8B
THRESHOLD

FLORIDA BUILDING CODE (High Velocity Hurricane Zone)

©2013 TILTECO, INC

TILTECO INC.
TILLIT TESTING & ENGINEERING COMPANY
6355 N.W. 36th. St., Ste. 305, VIRGINIA GARDENS, FL 33166
Phone : (305)871-1530 . Fax : (305)871-1531
e-mail: tilteco@aol.com
EB-0006719
WALTER A. TILLIT Jr., P.E.
FLORIDA Lic. # 44167

SERIES MSD-375 ALUMINUM MEDIUM STILE ENTRANCE DOOR (WET GLAZED) LARGE & SMALL MISSILE IMPACT

Oldcastle BuildingEnvelope™
803 Airport Rd - Terrell, TX 75160
www.OldcastleBE.com - Phone 800-869-4567

REV. No	DESCRIPTION	DATE
1	OLD 12-157	04/04/13
2	GENERAL	05/21/13

REV. No	DESCRIPTION	DATE
3		
4		

A.G.	DRAWN BY:
04/04/13	DATE
13-034	DRAWING No
SHEET 14 OF 24	

WALTER A. TILLIT JR. LICENSE No. 44167 STATE OF FLORIDA PROFESSIONAL ENGINEER

P.E. SEAL/SIGNATURE/DATE

PRODUCT REVISED
to complying with the Florida Building Code
Acceptance No. 12-0926.05
Expiration Date 2/17/15
By Shang I. Chang
Miami Dade Product Control

MIAMI-DADE COUNTY

HEADER CONNECTION DETAILS TO EXISTING STRUCTURE, FG-5000 AND FG-5100

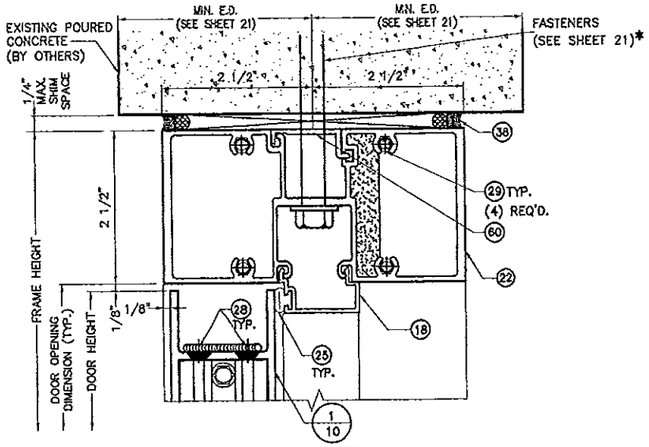

9
HEADER

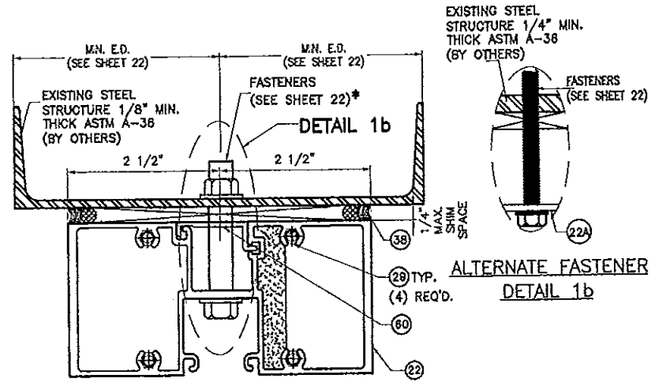

9A
HEADER

ALTERNATE FASTENER
DETAIL 1b

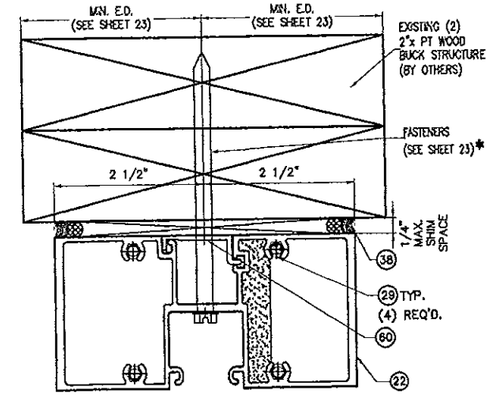

9B
HEADER

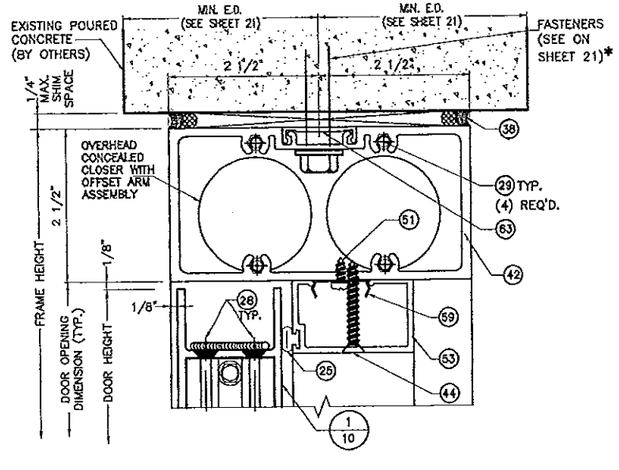

10
HEADER CONC.

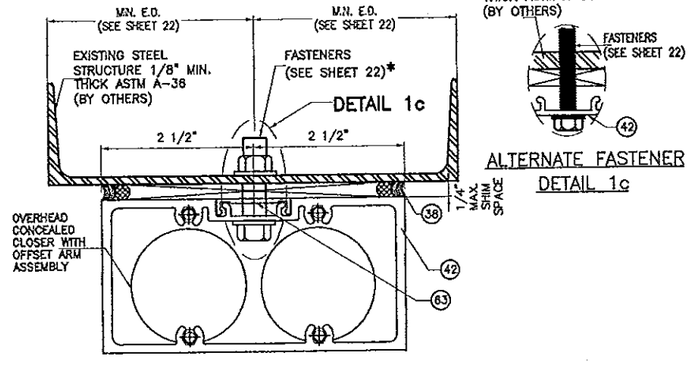

10A
HEADER CONC.

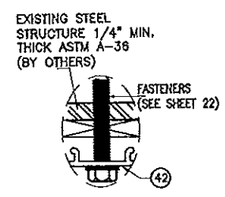

ALTERNATE FASTENER
DETAIL 1c

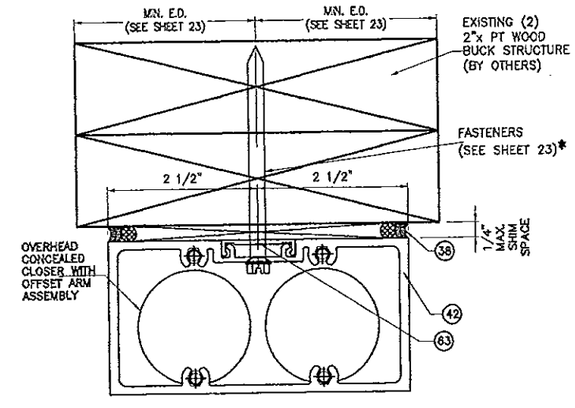

10B
HEADER CONC.

* ONLY REQUIRED AT PAIRS OF DOORS

FLORIDA BUILDING CODE (High Velocity Hurricane Zone)

SERIES MSD-375 ALUMINUM MEDIUM STILE ENTRANCE DOOR (WET GLAZED) LARGE & SMALL MISSILE IMPACT

A.G. DRAWN BY:
04/04/13 DATE
13-034 DRAWING No
SHEET 15 OF 24

Oldcastle BuildingEnvelope™
803 Airport Rd - Terrell, TX 75160
www.OldcastleBE.com - Phone 800-869-4567

REV. No.	DESCRIPTION	DATE
1	O.D. 12-137	04/04/13
2		
3		
4		

©2013 TILTECO, INC

TILTECO INC.
TILLIT TESTING & ENGINEERING COMPANY
6355 N.W. 36th. St., Ste. 305, VIRGINIA GARDENS, FL 33166
Phone : (305)871-1530 , Fax : (305)871-1531
e-mail: tilteco@aol.com
EB-0006719
WALTER A. TILLIT Jr. P.E.
FLORIDA Lic. # 44167

WALTER A. TILLIT JR. LICENSE No. 44167 STATE OF FLORIDA PROFESSIONAL ENGINEER

P.E. SEAL/SIGNATURE/DATE

PRODUCT REVISED
in complying with the Florida Building Code
Acceptance No 12-0926.05
Expiration Date 2/17/15
By
Miami Dade Product Control

MIAMI-DADE COUNTY

JAMB & DOOR JAMB MULLION CONNECTION DETAILS TO EXISTING STRUCTURE, FG-5000 AND FG-5100

◊ NOTE:
INDICATED MAXIMUM AND MINIMUM VALUES FOR SPECIFIED SEALANT VERTICAL JOINT WIDTH AT JAMBS CONNECTED TO WALL HAVE BEEN DETERMINED ONLY TAKING INTO CONSIDERATION THE ACTUAL MOVEMENT OF GLASS WALL AT JAMBS DUE TO THERMAL, WIND AND ITS OWN CONSTRUCTION TOLERANCE, AND NOT PERFORMANCE FACTORS FROM THE SURROUNDING STRUCTURE.

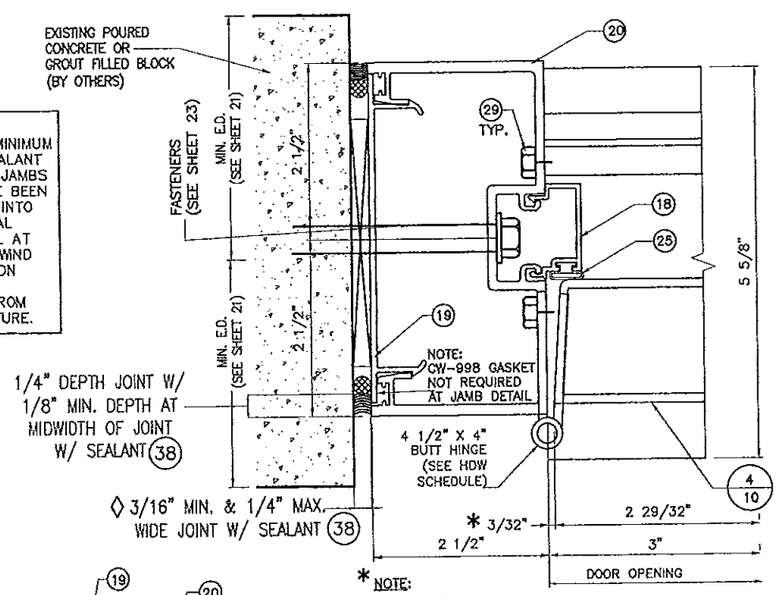

* NOTE:
3/32" CLEARANCE DIMENSIONS SHOWN ARE TYPICAL FOR BUTT HINGES OR OFFSET PIVOTS. GEAR HINGES REQUIRE 5/16" CLEARANCE AT JAMBS.

11
JAMB TO WALL @ DOOR

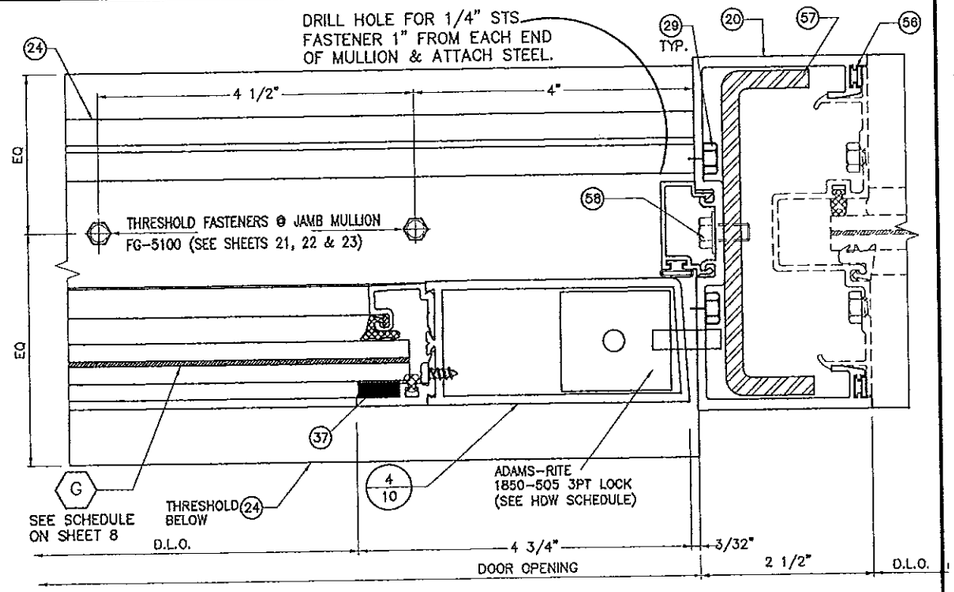

12
DOOR JAMB MULLION @ DOOR

DOOR JAMB MULLION IS PART OF THIS NOA FOR FG-5000 SYSTEM AND IS NOT FOR FG-5100 SYSTEM.

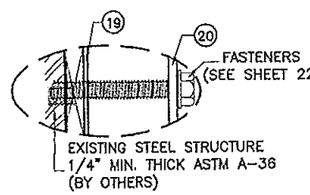

ALTERNATE FASTENER DETAIL 1

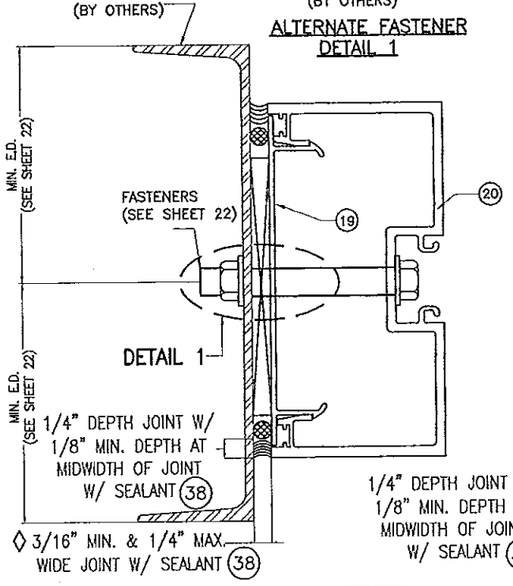

11A
JAMB TO WALL

OR

13A
JAMB TO WALL @ TRANSOM

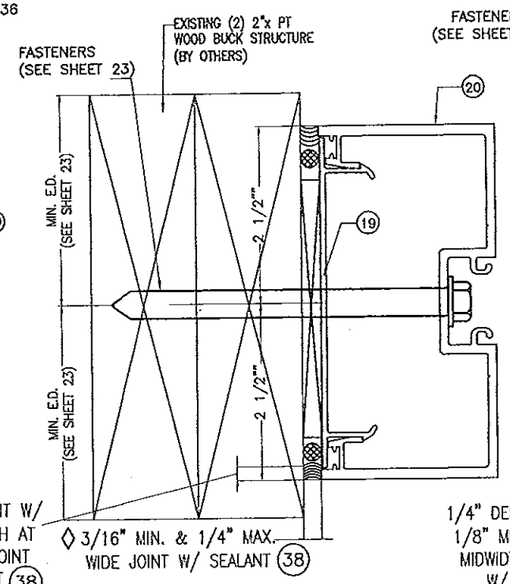

11B
JAMB TO WALL

OR

13B
JAMB TO WALL @ TRANSOM

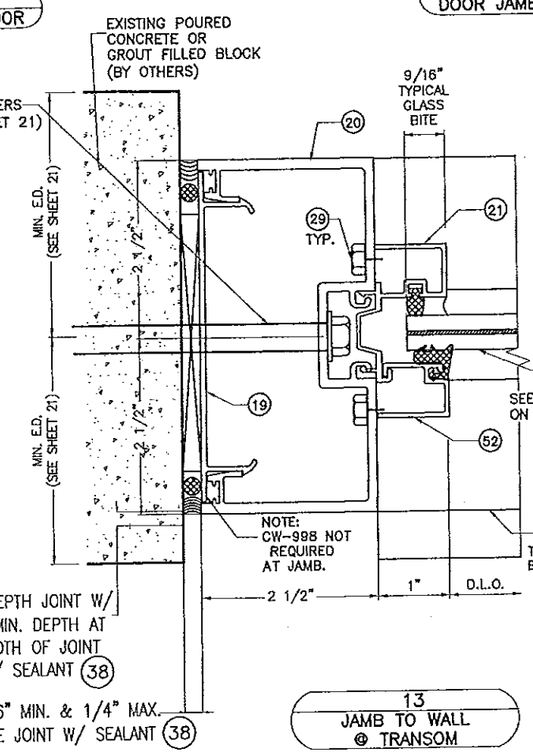

13
JAMB TO WALL @ TRANSOM

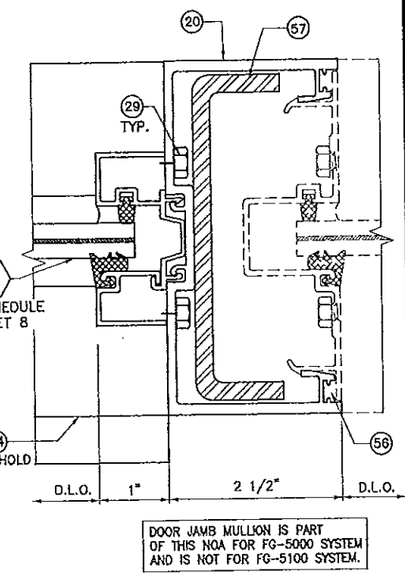

DOOR JAMB MULLION IS PART OF THIS NOA FOR FG-5000 SYSTEM AND IS NOT FOR FG-5100 SYSTEM.

14
DOOR JAMB MULLION @ TRANSOM

FLORIDA BUILDING CODE (High Velocity Hurricane Zone)

©2013 TILTECO, INC

SERIES MSD-375 ALUMINUM MEDIUM STILE ENTRANCE DOOR (WET GLAZED) LARGE & SMALL MISSILE IMPACT

A.G. DRAWN BY: | 04/04/13 DATE | 13-034 DRAWING No | SHEET 16 OF 24

Oldcastle BuildingEnvelope™
803 Airport Rd - Terrell, TX 75160
www.OldcastleBE.com - Phone 800-869-4567

TILLECO INC.
TILLIT TESTING & ENGINEERING COMPANY
6355 N.W. 36th. St., Ste. 305, VIRGINIA GARDENS, FL 33166
Phone: (305)871-1530, Fax: (305)871-1531
e-mail: tilteco@aol.com
EB-0006719
WALTER A. TILLIT Jr. P.E.
FLORIDA Lic. # 44167

REV. No	DESCRIPTION	DATE
1	OLD 12-157	04/04/13
2		
3		
4		

REV. No	DESCRIPTION	DATE

WALTER A. TILLIT JR. LICENSE NO. 44167 STATE OF FLORIDA PROFESSIONAL ENGINEER

P.E. SIGNATURE/DATE

PRODUCT REVISED
as complying with the Florida Building Code
Acceptance No. 12-0926.02
Expiration Date 2/17/15
By [signature]
Miami Dade Product Control

MIAMI-DADE COUNTY

HEADER CONNECTION DETAILS AT FG 5000 SYSTEM TO EXISTING STRUCTURE

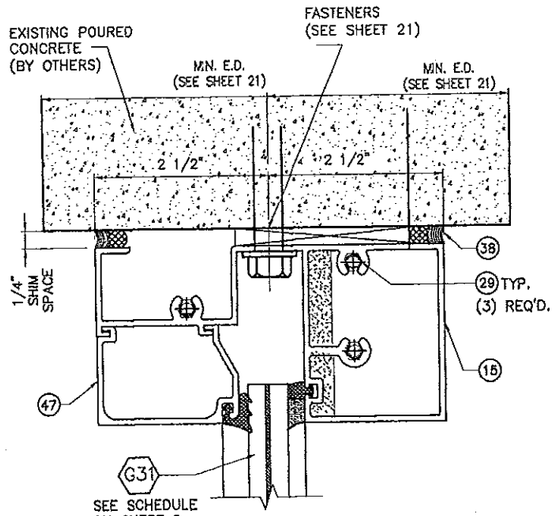

20
HEADER
@ TRANSOM

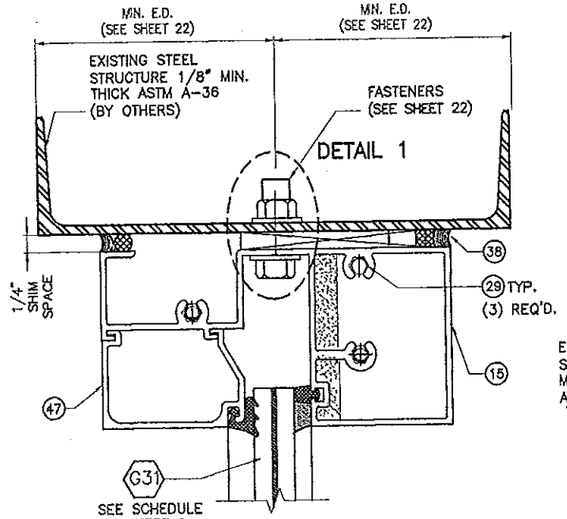

20A
HEADER
@ TRANSOM

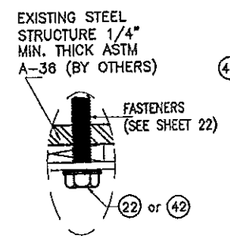

ALTERNATE FASTENER
DETAIL 1

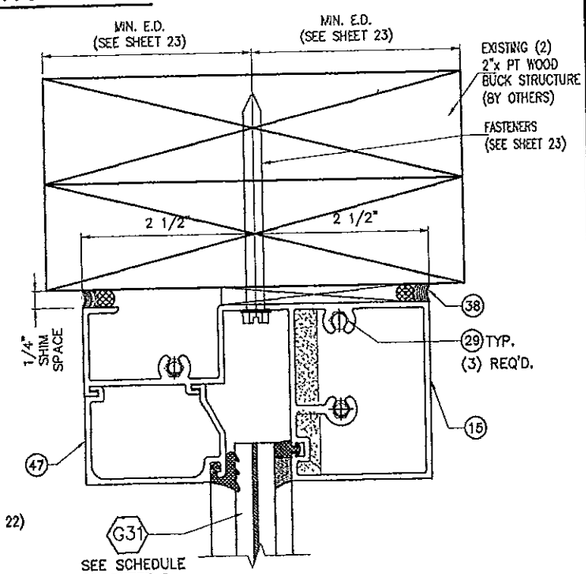

20B
HEADER
@ TRANSOM

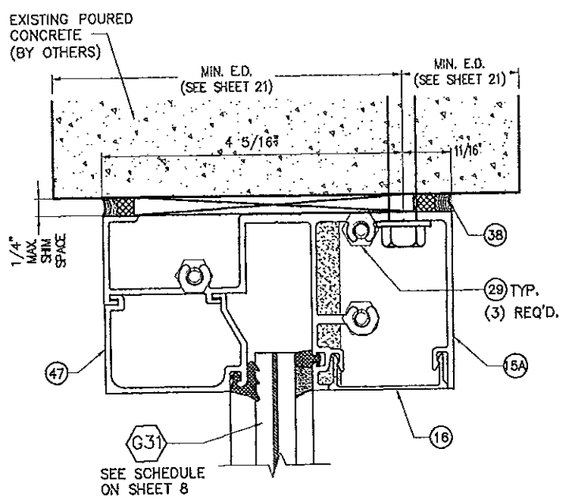

21
HEADER
@ TRANSOM
(OPTION TO 15)

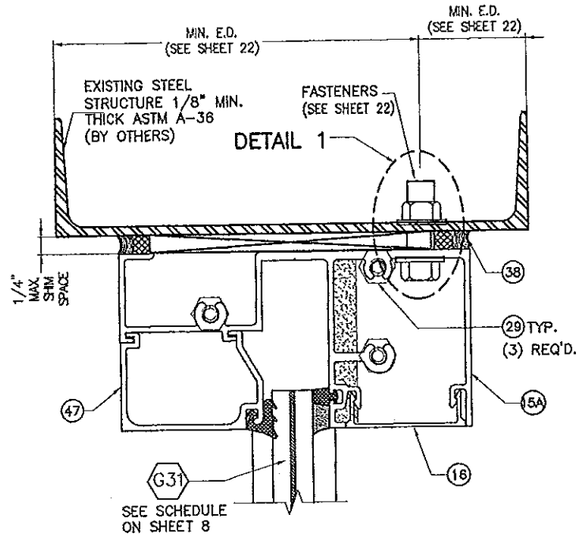

21A
HEADER
@ TRANSOM
(OPTION TO 15)

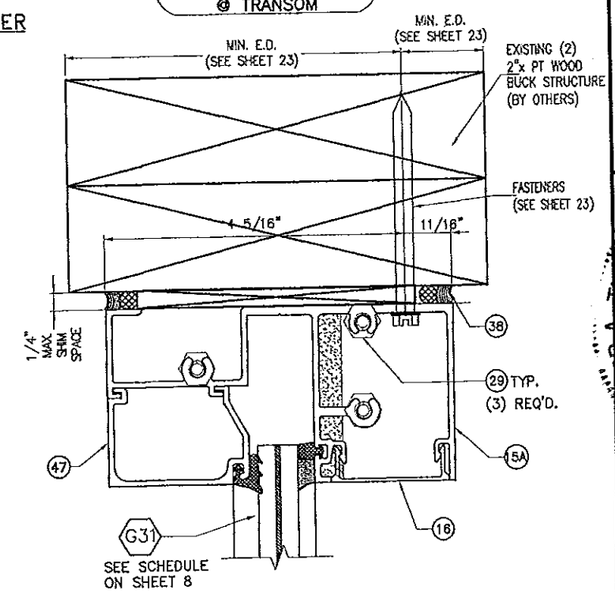

21B
HEADER
@ TRANSOM
(OPTION TO 15)

FLORIDA BUILDING CODE (High Velocity Hurricane Zone)

©2013 TILTECO, INC

TILTECO INC.
TILLIT TESTING & ENGINEERING COMPANY
6335 N.W. 36th St. 305, VIRGINIA GARDENS, FL 33166
Phone : (305)871-1530 - Fax : (305)871-1531
e-mail: tilteco@aol.com
EB-0006719
WALTER A. TILLIT Jr. P.E.
FLORIDA Lic. # 44167

SERIES MSD-375 ALUMINUM MEDIUM STILE ENTRANCE DOOR (WET GLAZED) LARGE & SMALL MISSILE IMPACT

Oldcastle BuildingEnvelope™
803 Airport Rd - Terrell, TX 75160
www.OldcastleBE.com - Phone 800-869-4567

REV. No	DESCRIPTION	DATE	REV. No	DESCRIPTION	DATE
1	OLD 12-157	04/04/13	3		
2			4		

A.G.
DRAWN BY:

04/04/13
DATE

13-034
DRAWING No

SHEET 16A OF 24

WALTER A. TILLIT JR. LICENSE No. 44167 STATE OF FLORIDA PROFESSIONAL ENGINEER

P.E. SEAL/SIGNATURE/DATE

PRODUCT REVISED
as complying with the Florida Building Code
Acceptance No 12-0726.05
Expiration Date 2/17/15
By
Miami Dade Product Control

MIAMI-DADE COUNTY

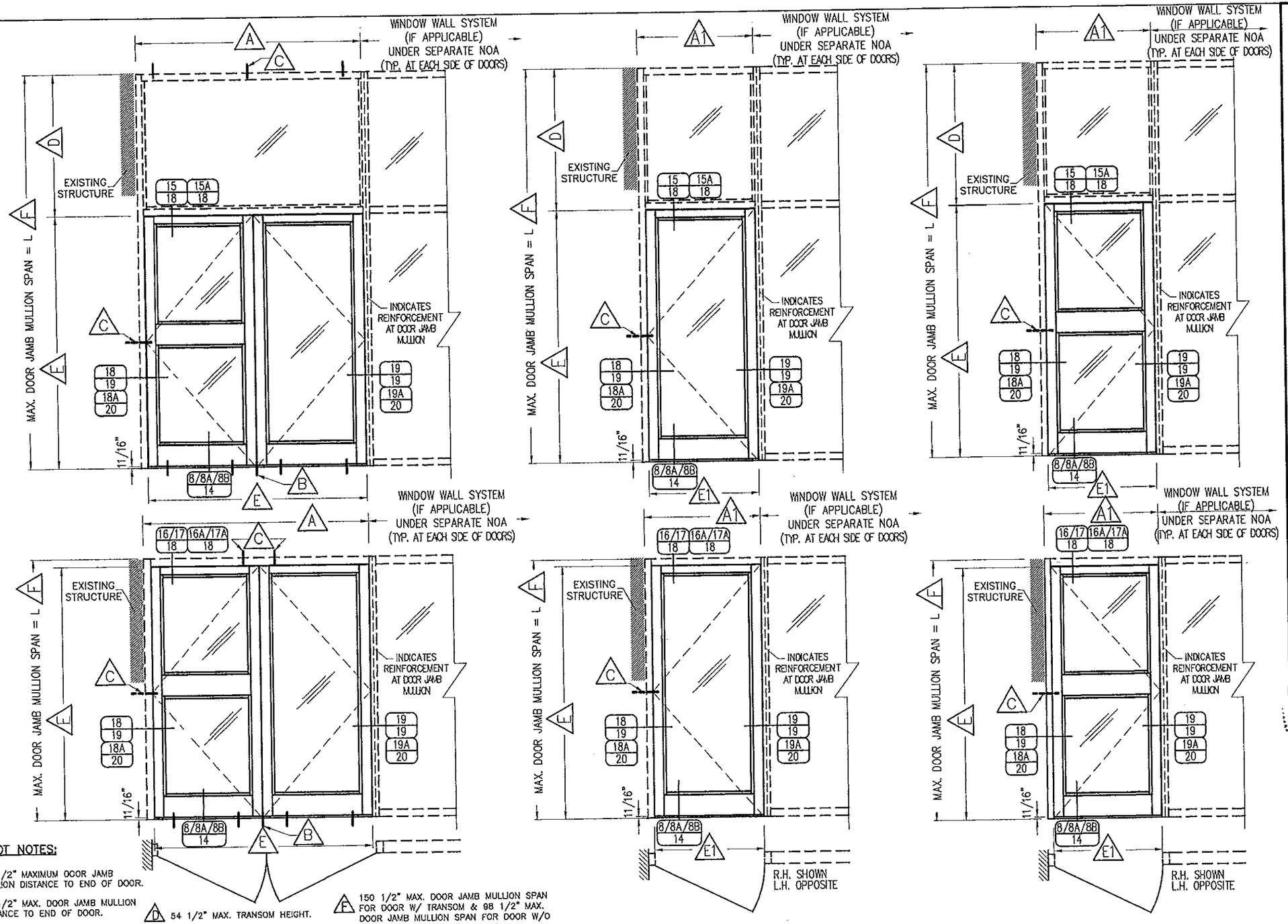

FOOT NOTES:

- A — 76 1/2" MAXIMUM DOOR JAMB MULLION DISTANCE TO END OF DOOR.
- A1 — 39 1/2" MAX. DOOR JAMB MULLION DISTANCE TO END OF DOOR.
- B — FOR THRESHOLD FASTENERS QUANTITY, TYPES AND SPECS SEE SHEETS 21, 22 & 23.
- C — FOR JAMB & HEAD FASTENERS QUANTITY, TYPES AND SPECS SEE SHEETS 21, 22 & 23.
- D — 54 1/2" MAX. TRANSOM HEIGHT.
- E — 96" MAX. DOOR HEIGHT (D.O.) & 74" MAX. DOOR WIDTH (D.O.).
- E1 — 96" MAX. DOOR HEIGHT (D.O.) & 37" MAX. DOOR WIDTH (D.O.).
- F — 150 1/2" MAX. DOOR JAMB MULLION SPAN FOR DOOR W/ TRANSOM & 98 1/2" MAX. DOOR JAMB MULLION SPAN FOR DOOR W/O TRANSOM.

TYPICAL ELEVATIONS FOR MSD-375 IMPACT DOOR (WET GLAZED) CONNECTED TO EXISTING STRUCTURE OR HR-250 AND HR-251 CAPTURED CURTAIN WALL SYSTEM FRAMING

FLORIDA BUILDING CODE (High Velocity Hurricane Zone)

©2013 TILTECO, INC

SERIES MSD-375 ALUMINUM MEDIUM STILE ENTRANCE DOOR (WET GLAZED) LARGE & SMALL MISSILE IMPACT

Oldcastle BuildingEnvelope™
803 Airport Rd - Terrell, TX 75160
www.OldcastleBE.com - Phone 800-869-4567

REV. No	DESCRIPTION	DATE	REV. No	DESCRIPTION	DATE
1	OLD 12-157	04/04/13	3		
2			4		

A.G. DRAWN BY:
04/04/13 DATE
13-034 DRAWING No
SHEET 17 OF 24

TILTECO INC.
TILLIT TESTING & ENGINEERING COMPANY
6355 N.W. 36th. St., Ste. 305, VIRGINIA GARDENS, FL 33166
Phone : (305)871-1530 . Fax : (305)871-1531
e-mail: tilteco@aol.com
EB-0006719
WALTER A. TILLIT Jr. P.E.
FLORIDA Lic. # 44167

WALTER A. TILLIT JR. LICENSE No. 44167 STATE OF FLORIDA PROFESSIONAL ENGINEER

P.E. SEAL/SIGNATURE/DATE

PRODUCT REVISED
as complying with the Florida Building Code
Acceptance No 12-0926.05
Expiration Date 2/19/15
By [signature]
Miami Dade Product Control

MIAMI-DADE COUNTY

TRANSOM BAR AND HEADER CONNECTION DETAILS TO HR-250 CURTAIN WALL SYSTEM

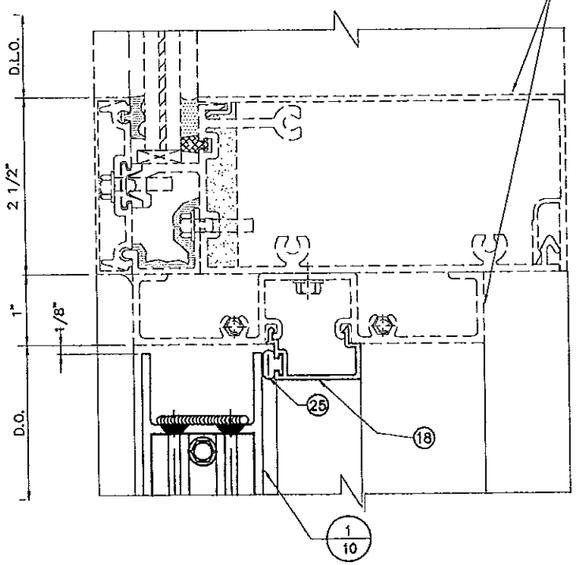

15
TRANSOM BAR

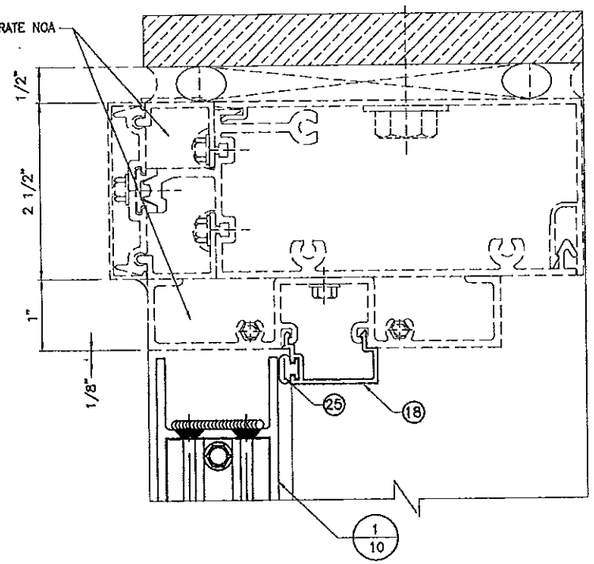

16
HEADER

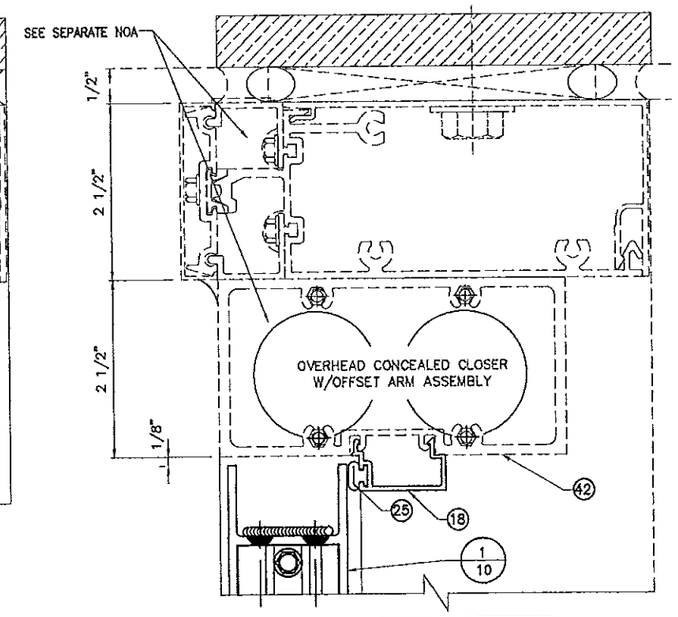

17
HEADER CONC.

TRANSOM BAR AND HEADER CONNECTION DETAILS TO HR-251 CURTAIN WALL SYSTEM

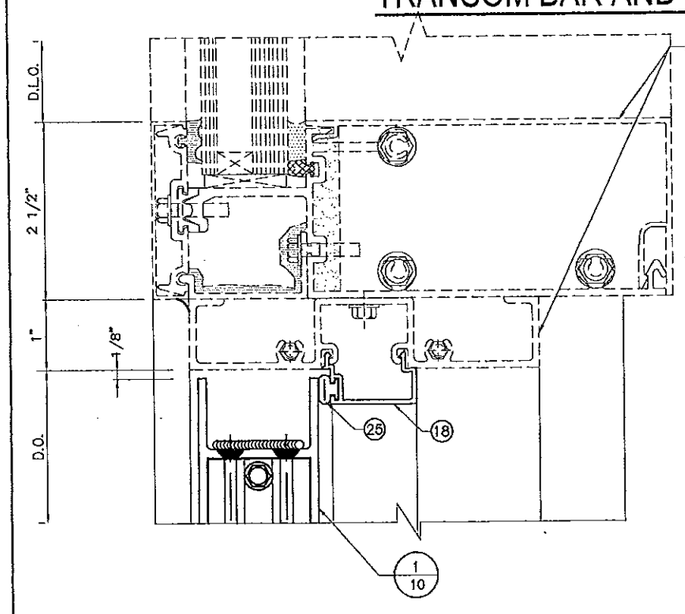

15A
TRANSOM BAR

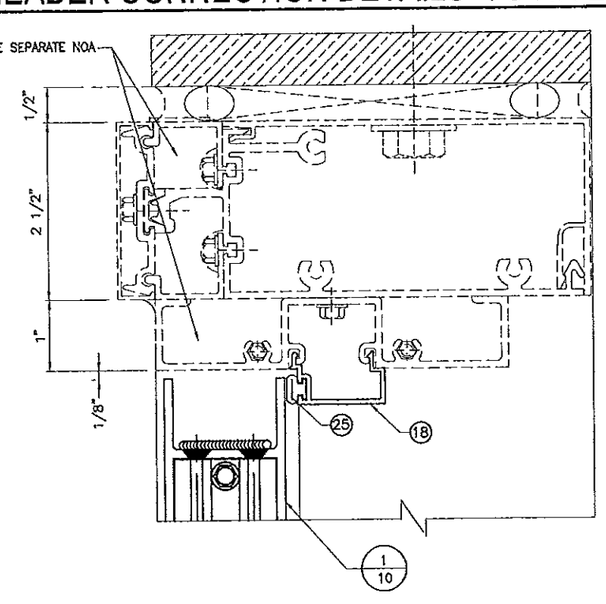

16A
HEADER

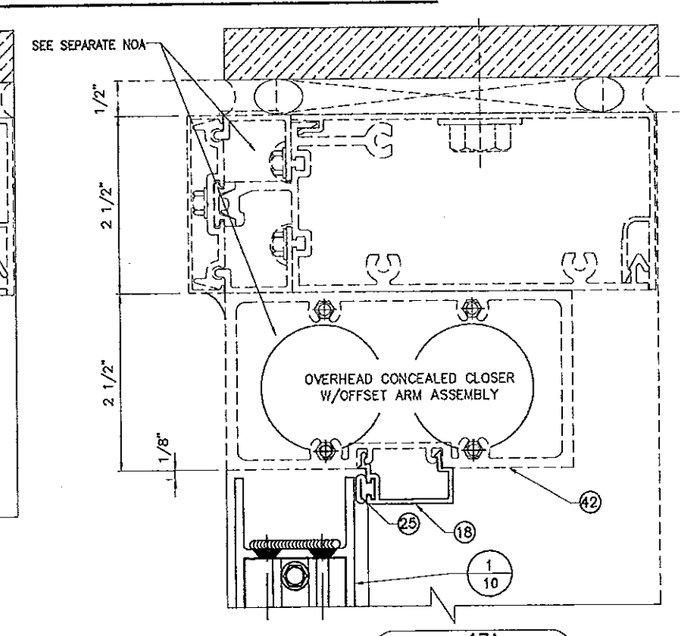

17A
HEADER CONC.

FLORIDA BUILDING CODE (High Velocity Hurricane Zone)

©2013 TILTECO, INC

TILTECO INC.
TILLIT TESTING & ENGINEERING COMPANY
6355 N.W. 36th. St., Ste. 305, VIRGINIA GARDENS, FL 33166
Phone : (305)871-1530 , Fax : (305)871-1531
e-mail: tilteco@aol.com
EB-0006719
WALTER A. TILLIT Jr., P.E.
FLORIDA Lic. # 44167

A.G.
DRAWN BY:

04/04/13
DATE

13-034
DRAWING No

SHEET 18 OF 24

SERIES MSD-375 ALUMINUM MEDIUM STILE ENTRANCE DOOR (WET GLAZED) LARGE & SMALL MISSILE IMPACT

Oldcastle BuildingEnvelope™
803 Airport Rd - Terrell, TX 75160
www.OldcastleBE.com - Phone 800-869-4567

REV. No	DESCRIPTION	DATE
1	OLD 12-157	04/04/13
2	GENERAL	05/21/13

REV. No	DESCRIPTION	DATE
3		
4		

WALTER A. TILLIT JR. LICENSE NO. 44167 STATE OF FLORIDA PROFESSIONAL ENGINEER
P.E. SEAL/SIGNATURE/DATE

PRODUCT REVISED
as complying with the Florida Building Code
Acceptance No. 12-0526.05
Expiration Date 2/17/15
By
Miami Dade Product Control

MIAMI-DADE COUNTY

JAMB CONNECTION DETAILS TO HR-250 CURTAIN WALL SYSTEM

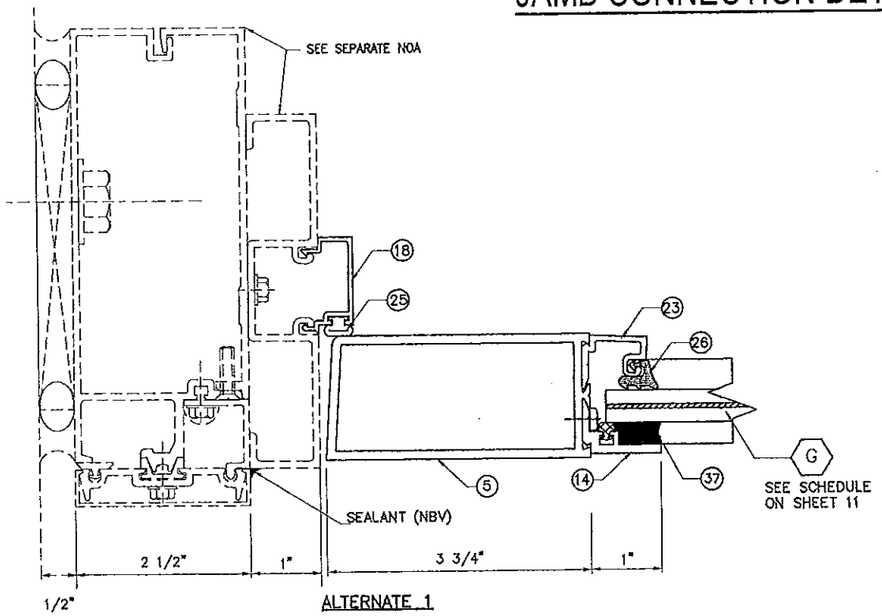

ALTERNATE 1

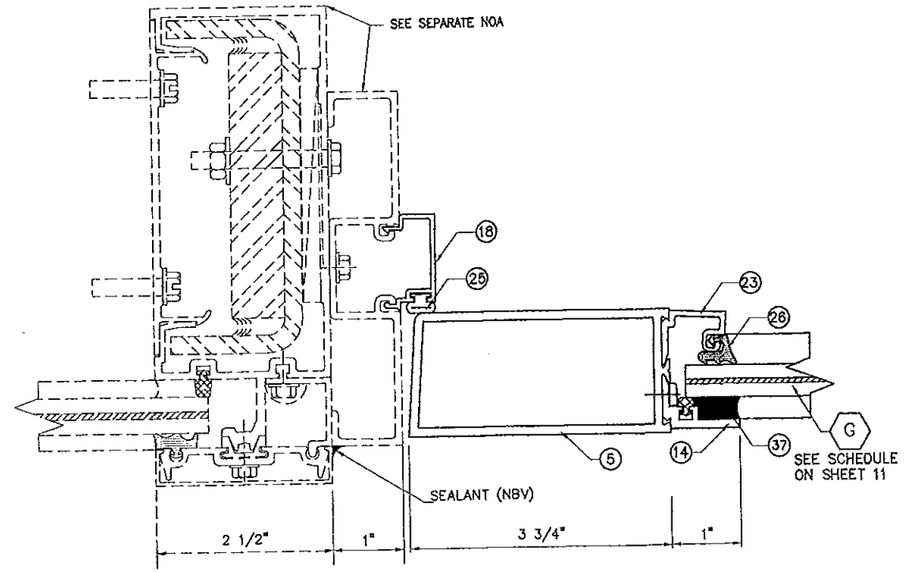

19
INT. JAMB AT DOOR

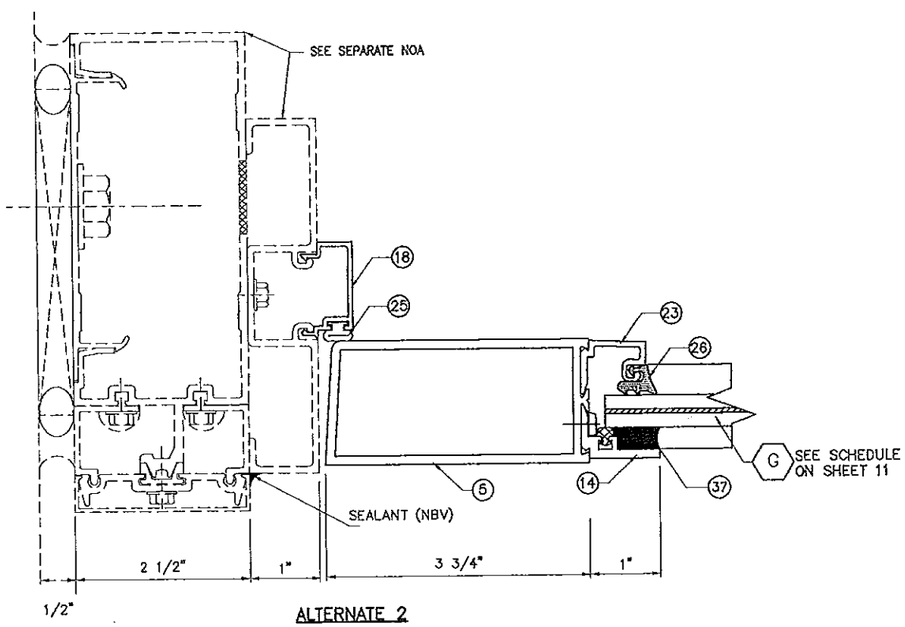

ALTERNATE 2

18
JAMB AT WALL

FLORIDA BUILDING CODE (High Velocity Hurricane Zone)

©2013 TILTECO, INC

TILTECO INC.
TILLIT TESTING & ENGINEERING COMPANY
6355 N.W. 36th. St., Ste. 305, VIRGINIA GARDENS, FL. 33166
Phone : (305)871-1510 Fax : (305)871-1531
e-mail: tilteco@aol.com
EB-0006719
WALTER A. TILLIT Jr. P.E.
FLORIDA Lic. # 44167

SERIES MSD-375 ALUMINUM MEDIUM STILE ENTRANCE DOOR (WET GLAZED) LARGE & SMALL MISSILE IMPACT

Oldcastle BuildingEnvelope™
803 Airport Rd - Terrell, TX 75160
www.OldcastleBE.com - Phone 800-869-4567

A.G.	DRAWN BY:
04/04/13	DATE
13-034	DRAWING No
SHEET 19 OF 24	

REV. No	DESCRIPTION	DATE	REV. No	DESCRIPTION	DATE
1	OLD 12-157	04/04/13	3		
2			4		

WALTER A. TILLIT JR. LICENSE No. 44167 STATE OF FLORIDA PROFESSIONAL ENGINEER

P.E. SEAL/SIGNATURE/DATE

PRODUCT REVISED
as complying with the Florida Building Code
Acceptance No 12-0926.05
Expiration Date 2/17/15
By [illegible]
Miami Dade Product Control

MIAMI-DADE COUNTY

JAMB CONNECTION DETAILS TO HR-251 CURTAIN WALL SYSTEM

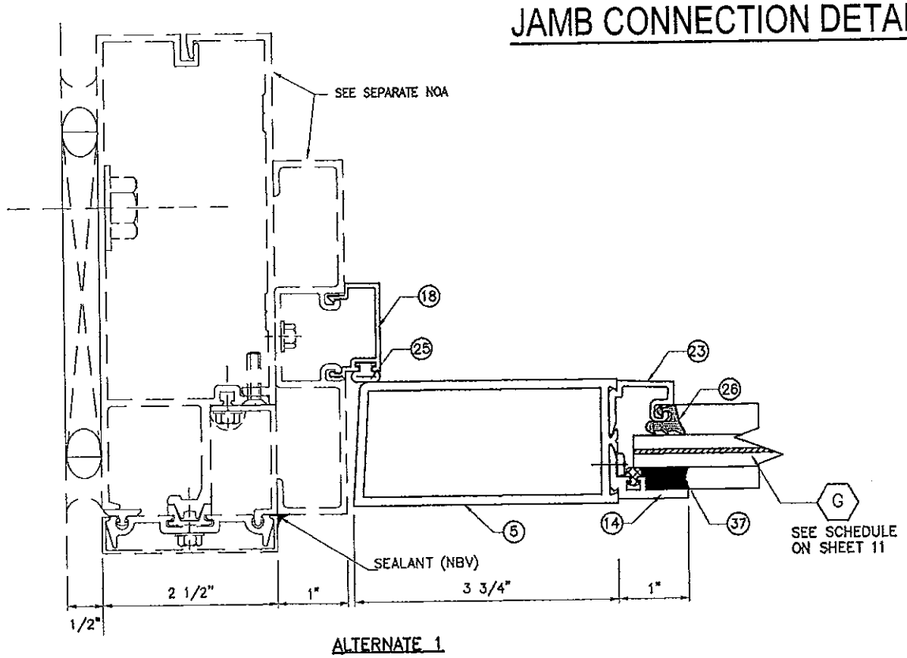

ALTERNATE 1

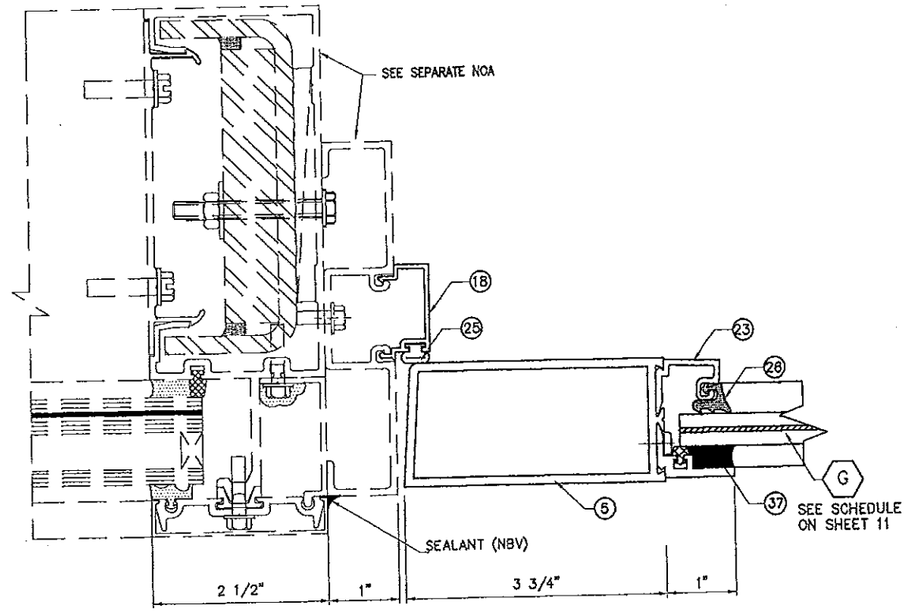

19A
INT. JAMB AT DOOR

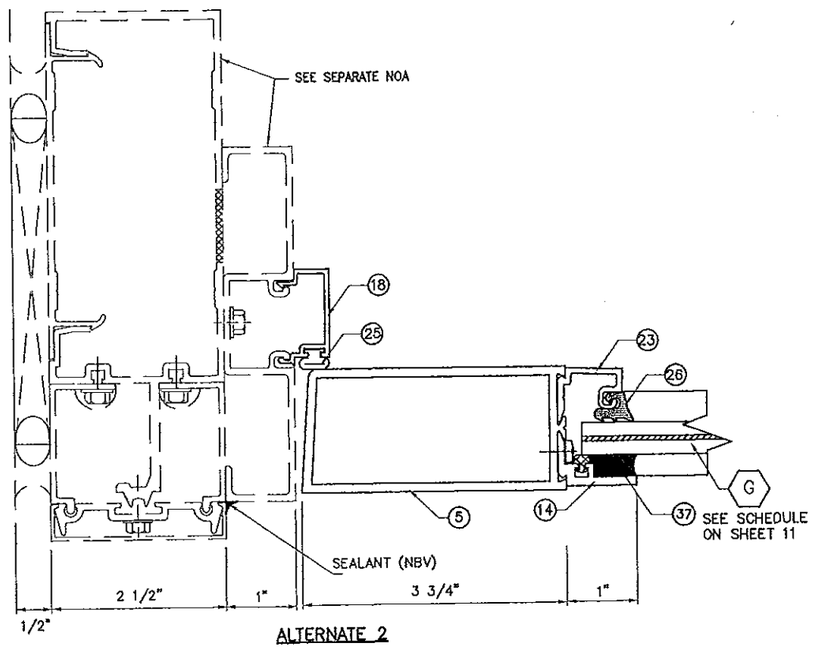

ALTERNATE 2

18A
JAMB AT WALL

FLORIDA BUILDING CODE (High Velocity Hurricane Zone)

©2013 TILTECO, INC

TILTECO INC.
TILLIT TESTING & ENGINEERING COMPANY
6555 N.W. 36th. St., Suite 305, VIRGINIA GARDENS, FL 33166
Phone : (305)871-1530 , Fax : (305)871-1531
e-mail: tilteco@aol.com
EB-0006719
WALTER A. TILLIT Jr. P.E.
FLORIDA Lic. # 44167

SERIES MSD-375 ALUMINUM MEDIUM STILE ENTRANCE DOOR (WET GLAZED) LARGE & SMALL MISSILE IMPACT

Oldcastle BuildingEnvelope™
803 Airport Rd - Terrell, TX 75160
www.OldcastleBE.com - Phone 800-869-4567

REV. No	DESCRIPTION	DATE
1	OLD 12-157	06/04/13
2		
3		
4		

A.G. DRAWN BY:
04/04/13 DATE
13-034 DRAWING No
SHEET 20 OF 24

WALTER A. TILLIT JR. LICENSE No. 44167 STATE OF FLORIDA PROFESSIONAL ENGINEER
P.E. SEAL/SIGNATURE/DATE

PRODUCT REVISED
as complying with the Florida Buiding Code
Acceptance No. 12-0926.05
Expiration Date 2/17/15
By
Miami Dade Product Control

MIAMI-DADE COUNTY

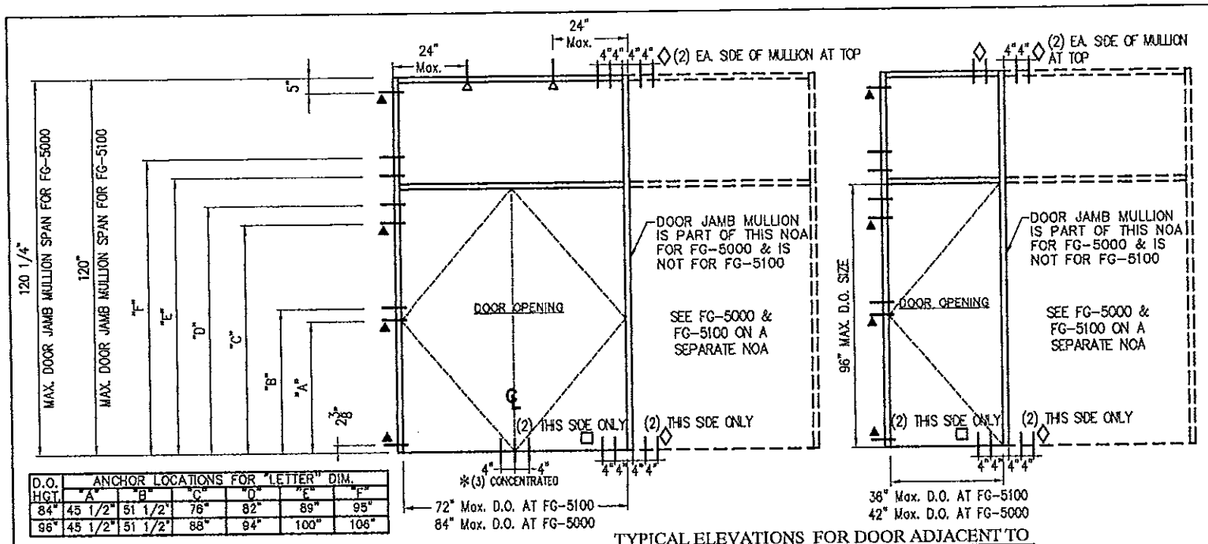

D.O. HGT.	ANCHOR LOCATIONS FOR "LETTER" DIM. "A"	"B"	"C"	"D"	"E"	"F"
84"	45 1/2"	51 1/2"	76"	82"	89"	95"
96"	45 1/2"	51 1/2"	88"	94"	100"	106"

TYPICAL ELEVATIONS FOR DOOR ADJACENT TO FG-5000 & FG-5100 ALUMINUM WINDOW WALL SYSTEM FRAMING

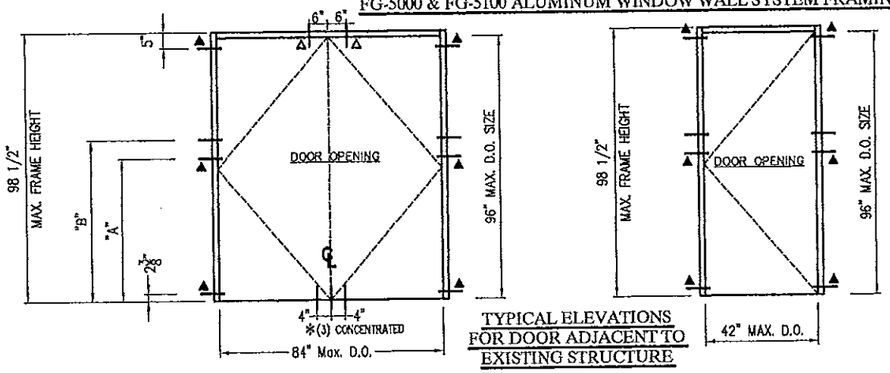

TYPICAL ELEVATIONS FOR DOOR ADJACENT TO EXISTING STRUCTURE

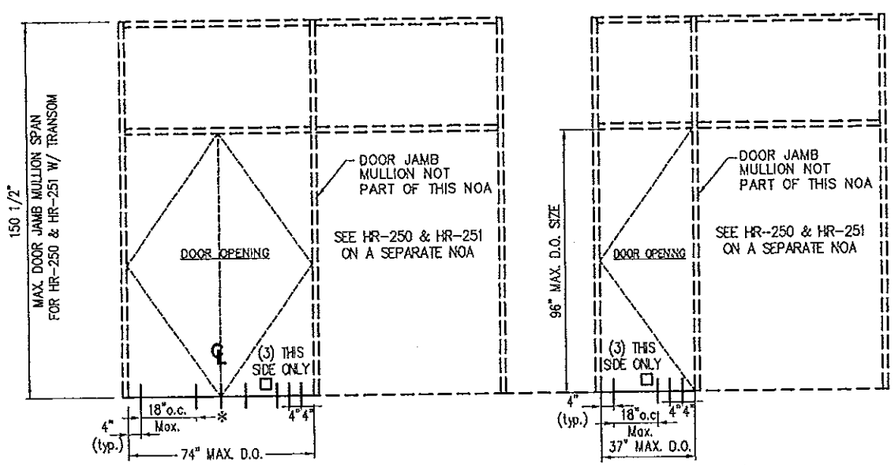

TYPICAL ELEVATIONS FOR DOOR ADJACENT TO HR-250 & HR-251 CAPTURE CURTAIN WALL SYSTEM FRAMING

PERIMETER FRAME FASTENER LOCATIONS

FASTENERS LEGEND

- △ : AT HEADER
- ▲ : AT JAMB
- * : AT THRESHOLD
- ◇ : AT MULLION AT TOP OR AT MULLION AT BOTTOM WINDOW WALL SIDE
- □ : AT MULLION THRESHOLD SIDE

TYPICAL INSTALLATION INTO: CONCRETE SUBSTRATE MIN. 3000 p.s.i.

FASTENERS TYPES AT △

A - 3/8"Ø HILTI KWIK BOLT TZ ANCHOR W/ 2" Min. EMBEDMENT INTO 6" Min. THICK POURED CONCRETE (Min. f'c = 3 ksi) BEYOND ANY FINISH MATERIAL, W/ 4" MIN. EDGE DISTANCE.

B - 3/8"Ø POWER FASTENERS TAPPER ANCHOR W/ 1 3/4" Min. EMBEDMENT INTO POURED CONCRETE (Min. f'c = 3 ksi) BEYOND ANY FINISH MATERIAL, W/ 4 1/2" MIN. EDGE DISTANCE.

C - 3/8"Ø HILTI HUS-H SCREW ANCHOR W/ 2" Min. EMBEDMENT INTO POURED CONCRETE (Min. f'c = 3 ksi) BEYOND ANY FINISH MATERIAL, W/ 5" MIN. EDGE DISTANCE.

FASTENERS TYPE AT *

F - 1/4"Ø F.H. ELCO TEXTRON TAPCON ANCHOR W/ 1 3/4" Min. EMBEDMENT INTO 6" Min. THICK POURED CONCRETE (Min. f'c = 3.192 ksi) BEYOND ANY FINISH MATERIAL, W/ 2 1/2" MIN. EDGE DISTANCE.

FASTENERS TYPES AT ◇

A - 3/8"Ø HILTI KWIK BOLT TZ ANCHOR W/ 2" Min. EMBEDMENT INTO 6" Min. THICK POURED CONCRETE (Min. f'c = 3 ksi) BEYOND ANY FINISH MATERIAL, W/ 4" MIN. EDGE DISTANCE.

C' - 1/2"Ø HILTI HUS-H SCREW ANCHOR W/ 2" Min. EMBEDMENT INTO POURED CONCRETE (Min. f'c = 3 ksi) BEYOND ANY FINISH MATERIAL, W/ 5" MIN. EDGE DISTANCE.

FASTENERS TYPE AT □

I - 3/8"Ø F.H. POWERS FASTENERS TAPPER SCREW ANCHOR W/ 1 3/4" MIN. EMBEDMENT INTO POURED CONCRETE (MIN. FC = 3 KSI) BEYOND ANY FINISH MATERIAL, W/ 6" MIN. EDGE DISTANCE.

FASTENERS TYPES AT ▲

A' - 3/8"Ø HILTI KWIK BOLT 3 ANCHOR W/ 2 1/2" Min. EMBEDMENT INTO 6" Min. THICK POURED CONCRETE(Min. f'c = 3 ksi) BEYOND ANY FINISH MATERIAL, W/ 4" MIN. EDGE DISTANCE.

B - 3/8"Ø POWER FASTENERS TAPPER ANCHOR W/ 1 3/4" Min. EMBEDMENT INTO POURED CONCRETE (Min. f'c = 3 ksi) BEYOND ANY FINISH MATERIAL, W/ 4 1/2" MIN. EDGE DISTANCE.

C - 3/8"Ø HILTI HUS-H SCREW ANCHOR W/ 2" Min. EMBEDMENT INTO POURED CONCRETE (Min. f'c = 3 ksi) BEYOND ANY FINISH MATERIAL, W/ 5" MIN. EDGE DISTANCE.

TYPICAL INSTALLATION INTO: GROUT FILLED CONCRETE BLOCK SUBSTRATE

FASTENERS TYPES AT ▲ & △

A - 3/8"Ø HILTI KWIK BOLT 3 ANCHOR W/ 2" Min. EMBEDMENT INTO GROUT FILLED CONCRETE BLOCK BEYOND ANY FINISH MATERIAL, W/ 4" MIN. EDGE DISTANCE.

B - 3/8"Ø POWER FASTENERS TAPPER ANCHOR W/ 1 3/4" Min. EMBEDMENT INTO GROUT FILLED CONCRETE BLOCK BEYOND ANY FINISH MATERIAL, W/ 3" MIN. EDGE DISTANCE.

C - 3/8"Ø HILTI HUS-H SCREW ANCHOR W/ 2 3/4" Min. EMBEDMENT INTO GROUT FILLED CONCRETE BLOCK BEYOND ANY FINISH MATERIAL, W/ 2 3/4" MIN. EDGE DISTANCE.

FLORIDA BUILDING CODE (High Velocity Hurricane Zone)

©2013 TILTECO, INC

TILTECO INC.
TILLIT TESTING & ENGINEERING COMPANY
6355 N.W. 36th. St. Ste. 305, VIRGINIA GARDENS, FL 33166
Phone : (305)871-1530 , Fax : (305)871-1531
e-mail: tiltecoe@aol.com
EB-0006719
WALTER A. TILLIT Jr. P.E.
FLORIDA Lic. # 44167

WALTER A. TILLIT JR. LICENSE NO 44167 STATE OF FLORIDA PROFESSIONAL ENGINEER

P.E. SEAL/SIGNATURE/DATE

PRODUCT REVISED
as complying with the Florida Building Code
Acceptance No 12-0926.05
Expiration Date 2/17/15
By [signature]
Miami Dade Product Control

MIAMI-DADE COUNTY

SERIES MSD-375 ALUMINUM MEDIUM STILE ENTRANCE DOOR (WET GLAZED) LARGE & SMALL MISSILE IMPACT

Oldcastle BuildingEnvelope™
803 Airport Rd - Terrell, TX 75160
www.OldcastleBE.com - Phone 800-869-4567

REV. No	DESCRIPTION	DATE
1	OLD 12-157	04/04/13
2		
3		
4		

A.G. DRAWN BY:	04/04/13 DATE
13-034 DRAWING No	SHEET 21 OF 24

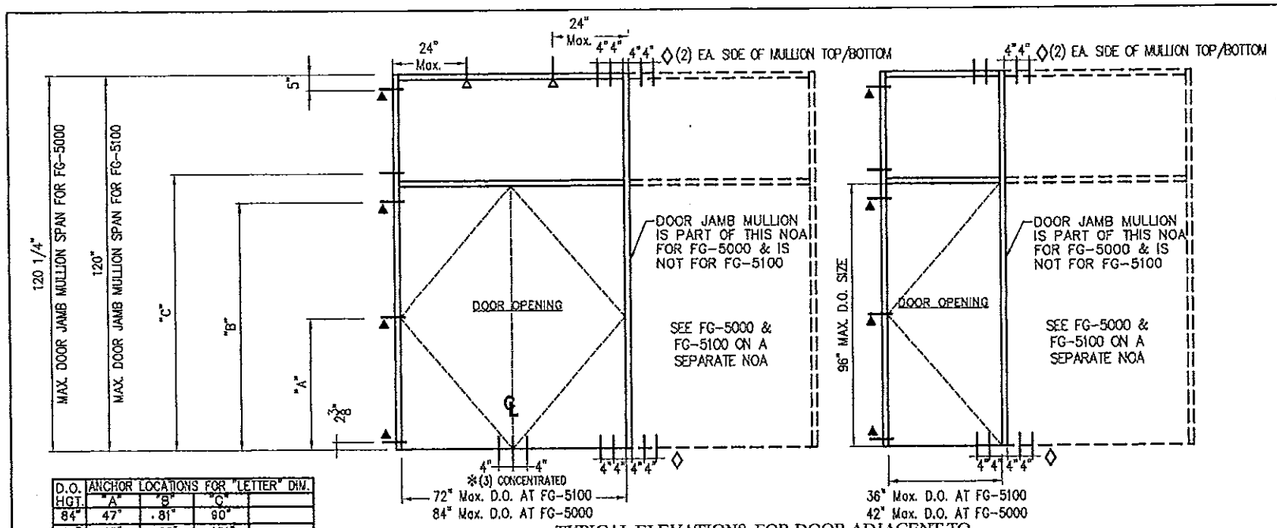

D.O. HGT.	ANCHOR LOCATIONS FOR "LETTER" DIM. "A"	"B"	"C"	
84"	47"	81"	90"	
96"	47"	93"	101"	

TYPICAL ELEVATIONS FOR DOOR ADJACENT TO FG-5000 & FG-5100 ALUMINUM WINDOW WALL SYSTEM FRAMING

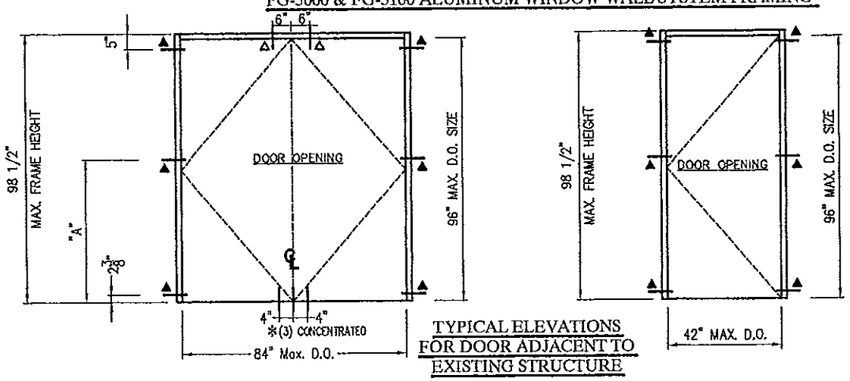

TYPICAL ELEVATIONS FOR DOOR ADJACENT TO EXISTING STRUCTURE

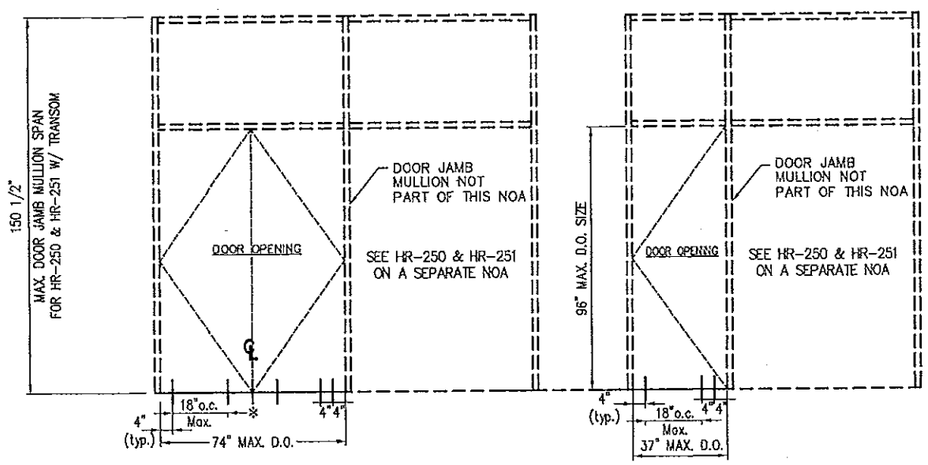

TYPICAL ELEVATIONS FOR DOOR ADJACENT TO HR-250 & HR-251 CAPTURE CURTAIN WALL SYSTEM FRAMING

PERIMETER FRAME FASTENER LOCATIONS

FASTENERS LEGEND

- △ : AT HEADER
- ▲ : AT JAMB
- * : AT THRESHOLD
- ◇ : AT MULLION TOP/BOTTOM

TYPICAL INSTALLATION INTO: 1/8" THICK ASTM A-36 STEEL SUBSTRATE

FASTENERS TYPES
AT ▲, △ & ◇

D - 3/8"Ø F.H. TYPE "F" BOLT TO 1/4" Min. THK. ASTM A-36 STEEL W/ 3/4" MIN. EDGE DISTANCE OR 3/8"Ø -16 F.H. SAE GRADE 5 GALVANIZED STEEL HHB THRU BOLT W/ NUT & LOCK WASHER TO 1/8" Min. THK. ASTM A-36 STEEL.

FASTENERS TYPE
AT
*

G - 1/4"Ø F.H. TYPE "F" BOLT TO 1/4" Min. THK. ASTM A-36 STEEL W/ 1/2" MIN. EDGE DISTANCE .

FLORIDA BUILDING CODE (High Velocity Hurricane Zone)

©2013 TILTECO, INC

TILTECO INC.
TILLIT TESTING & ENGINEERING COMPANY
6355 N.W. 36th. St., Ste. 303, VIRGINIA GARDENS, FL. 33166
Phone : (305)871-1530 - Fax : (305)871-1531
e-mail: tilteco@aol.com
EB-0006719
WALTER A. TILLIT Jr., P.E.
FLORIDA Lic. # 44167

SERIES MSD-375 ALUMINUM MEDIUM STILE ENTRANCE DOOR (WET GLAZED) LARGE & SMALL MISSILE IMPACT

Oldcastle BuildingEnvelope™
803 Airport Rd - Terrell, TX 75160
www.OldcastleBE.com - Phone 800-869-4567

REV. No	DESCRIPTION	DATE
1	OLD 12-157	04/04/13
2		
3		
4		

A.G. DRAWN BY:
04/04/13 DATE
13-034 DRAWING No
SHEET 22 OF 24

WALTER A. TILLIT JR. LICENSE No. 44167 STATE OF FLORIDA PROFESSIONAL ENGINEER
P.E. SEAL/SIGNATURE/DATE

PRODUCT REVISED
as complying with the Florida Building Code
Acceptance No 12-0926.05
Expiration Date 2/17/15
By
Miami Dade Product Control

MIAMI-DADE COUNTY

PERIMETER FRAME FASTENER LOCATIONS

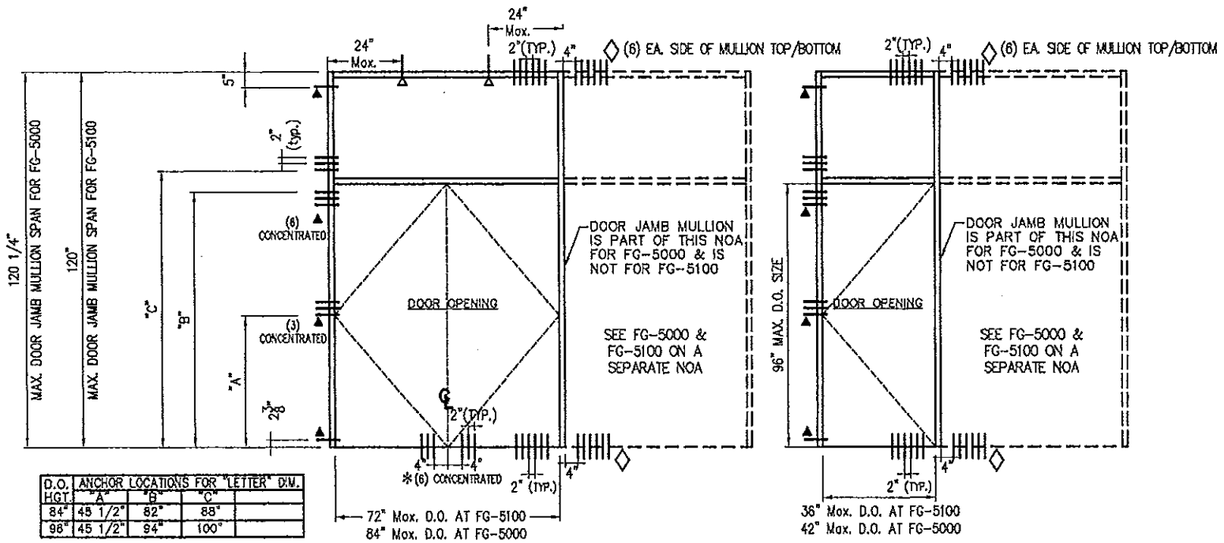

D.O. HGT.	ANCHOR LOCATIONS FOR "LETTER" DIM. "A"	"B"	"C"	
84"	45 1/2"	82"	88"	
96"	45 1/2"	94"	100"	

TYPICAL ELEVATIONS FOR DOOR ADJACENT TO FG-5000 & FG-5100 ALUMINUM WINDOW WALL SYSTEM FRAMING

FASTENERS LEGEND

- △ : AT HEADER
- ▲ : AT JAMB
- * : AT THRESHOLD
- ◇ : AT MULLION TOP/BOTTOM & AT TOP OF DOOR ADJACENT TO EXISTING STRUCTURE

TYPICAL INSTALLATION INTO: WOOD SUBSTRATE

FASTENERS TYPE AT ▲ & △

E - 3/8"Ø LAG SCREWS TO DOUBLE BUCK (G=0.55) W/ 3" Min. PENETRATION INTO WOOD W/ 1 1/2" MIN. EDGE DISTANCE.

FASTENERS TYPE AT *

H- 1/4"Ø F.H. WOOD SCREWS TO DOUBLE BUCK (G=0.55) W/ 3" Min. PENETRATION INTO WOOD W/ 1" MIN. EDGE DISTANCE.

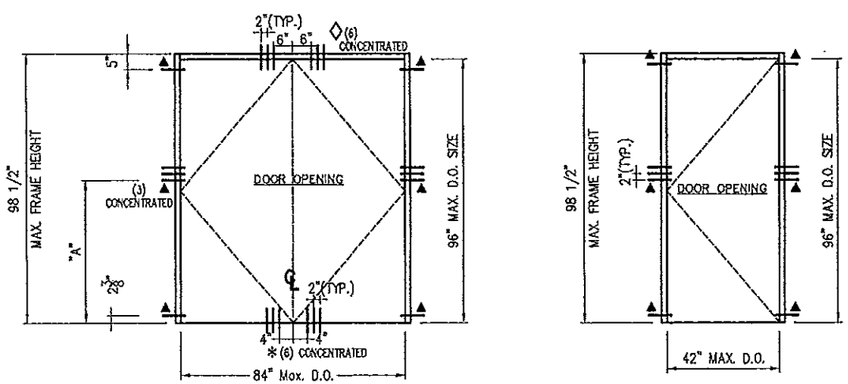

TYPICAL ELEVATIONS FOR DOOR ADJACENT TO EXISTING STRUCTURE

FASTENERS TYPE AT ◇

E' - 24 GAGE (0.372" O.D.) F.H. WOOD SCREWS TO DOUBLE BUCK (G=0.55) W/ 3" Min. PENETRATION INTO WOOD W/ 2" MIN. EDGE DISTANCE.

FLORIDA BUILDING CODE (High Velocity Hurricane Zone)

©2013 TILTECO, INC

TILTECO INC.
TILLIT TESTING & ENGINEERING COMPANY
6335 N.W. 36th. St., Ste. 305, VIRGINIA GARDENS, FL 33166
Phone : (305)871-1530 , Fax : (305)871-1531
e-mail: tilteco@aol.com
EB-0006719
WALTER A. TILLIT Jr. P.E.
FLORIDA Lic. # 44167

SERIES MSD-375 ALUMINUM MEDIUM STILE ENTRANCE DOOR (WET GLAZED) LARGE & SMALL MISSILE IMPACT

Oldcastle BuildingEnvelope™
803 Airport Rd - Terrell, TX 75160
www.OldcastleBE.com - Phone 800-869-4567

REV. No	DESCRIPTION	DATE	REV. No	DESCRIPTION	DATE
1	O.D. 12-157	04/04/13	3		
2	GENERAL	05/21/13	4		

A.C. DRAWN BY:
04/04/13 DATE
13-034 DRAWING No
SHEET 23 OF 24

WALTER A. TILLIT JR. LICENSE No. 44167 STATE OF FLORIDA PROFESSIONAL ENGINEER
P.E. SEAL/SIGNATURE/DATE

PRODUCT REVISED
as complying with the Florida Building Code
Acceptance No. 12-0526.05
Expiration Date 2/17/15
By [signature]
Miami Dade Product Control

MIAMI-DADE COUNTY

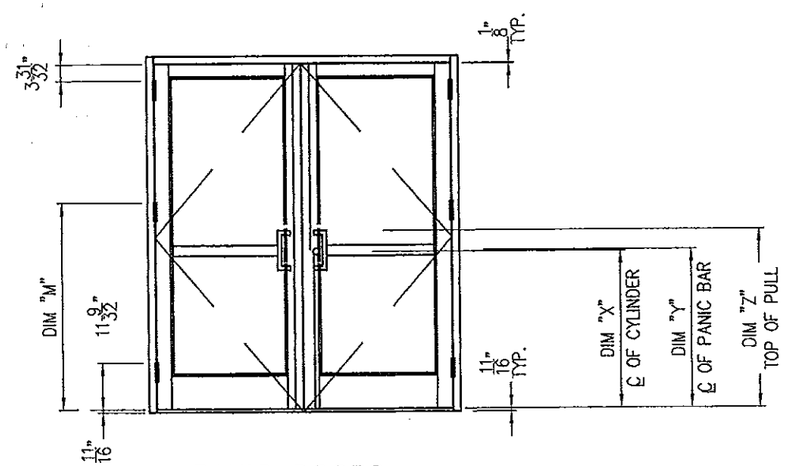

PANIC DOORS
WITH 1 1/2 PAIR BUTT HINGES

MANUFACTURER	PANIC DEVICE	DIM "X"	DIM "Y"	DIM "Z"
REGENT	5770	38 1/2	39 1/8	43 3/8
SARGENT	8410	51 1/8	40 3/8	42 3/16
JACKSON	1286	37 3/16	37 15/32	42 3/16
JACKSON	2086	37 3/16	37 15/32	42 3/16
VON DUPRIN	9927	39 3/8	39 3/8	44 3/8
VON DUPRIN	9947	39 15/16	39 3/8	44 3/8

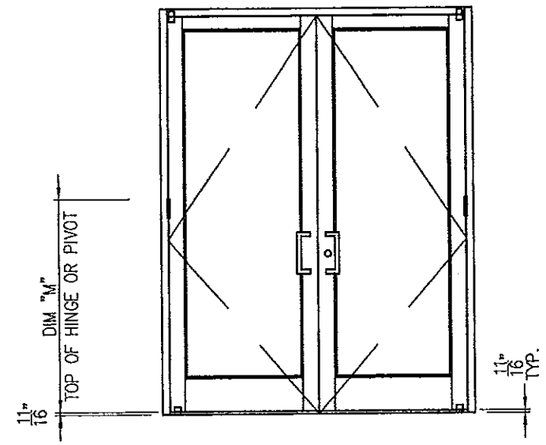

DOOR WITH 1 1/2 PAIR BUTT
HINGES OR OFFSET PIVOTS

DOOR HEIGHT	DIM "M"
84"	43 27/32"
96"	49 27/32"

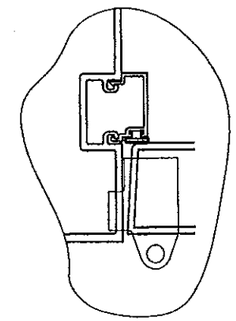

OFFSET PIVOT
DETAIL

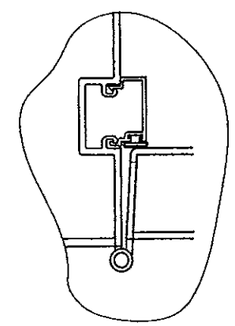

BUTT HINGE
DETAIL

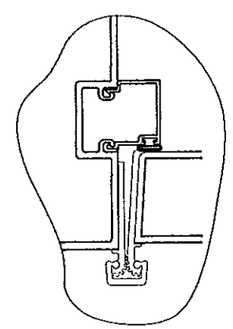

ROTON HINGE
DETAIL

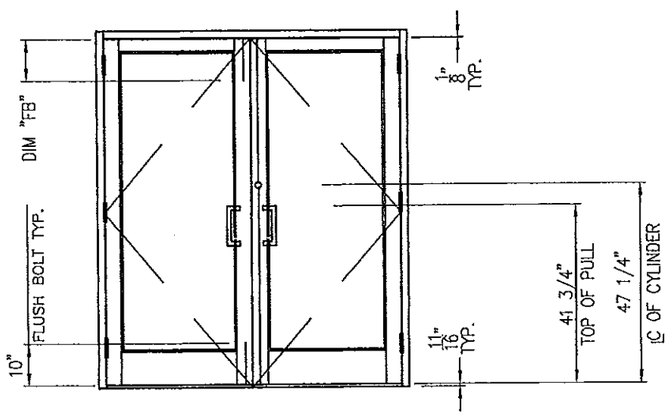

3 POINT LOCK AND FLUSH BOLT DOORS
WITH 1 1/2 PAIR BUTT HINGES

MANUFACTURER	DESCRIPTION	PART #	DIM "FB"
INTERNATIONAL	TOP FLUSH BOLT (FOR 96" TALL DOOR)	FB-1201-VRM-96	22"
INTERNATIONAL	TOP FLUSH BOLT (FOR 84" TALL DOOR)	FB-1201-VRM	10"
INTERNATIONAL	BOTTOM FLUSH BOLT (FOR 84"/96" TALL DOOR)	FB-1201-VRM	10"

STANDARD HARDWARE LOCATIONS FOR SERIES MSD-375 IMPACT DOORS (WET GLAZED)

OLDCASTLE BUILDINGENVELOPE LOCK CYLINDERS USED ON ALL DOORS.

FLORIDA BUILDING CODE (High Velocity Hurricane Zone)

A.G. DRAWN BY:
04/04/13 DATE
13-034 DRAWING No
SHEET 24 OF 24

SERIES MSD-375 ALUMINUM MEDIUM STILE ENTRANCE DOOR (WET GLAZED)
LARGE & SMALL MISSILE IMPACT

Oldcastle BuildingEnvelope™
803 Airport Rd - Terrell, TX 75160
www.OldcastleBE.com - Phone 800-869-4567

REV. No	DESCRIPTION	DATE	REV. No	DESCRIPTION	DATE
1	OLD 12-157	04/04/13	3		
2			4		

©2013 TILTECO, INC

TILTECO INC.
TILLIT TESTING & ENGINEERING COMPANY
6335 N.W. 36th. St., Ste. 305, VIRGINIA GARDENS, FL. 33166
Phone : (305)871-1530 . Fax : (305)871-1531
e-mail: tilteco@aol.com
EB-0006719
WALTER A. TILLIT Jr. P.E.
FLORIDA Lic. # 44167

WALTER A. TILLIT JR. LICENSE No 44167 STATE OF FLORIDA PROFESSIONAL ENGINEER
P.E. SEAL/SIGNATURE/DATE

PRODUCT REVISED
as complying with the Florida Building Code
Acceptance No. 12-0926.05
Expiration Date FEB. 17, 2015
By Miami Dade Product Control

MIAMI-DADE COUNTY