MIAMI-DADE COUNTY
PRODUCT CONTROL SECTION
11805 SW 26 Street, Room 208
Miami, Florida 33175-2474
T (786) 315-2590 F (786) 315-2599
www.miamidade.gov/economy

DEPARTMENT OF REGULATORY AND ECONOMIC RESOURCES (RER)
BOARD AND CODE ADMINISTRATION DIVISION

NOTICE OF ACCEPTANCE (NOA)

ACME Engineering and Manufacturing Corporation
1820 N. York Street
Muskogee, OK 74403

SCOPE:

This NOA is being issued under the applicable rules and regulations governing the use of construction materials. The documentation submitted has been reviewed and accepted by Miami-Dade County RER-Product Control Section to be used in Miami Dade County and other areas where allowed by the Authority Having Jurisdiction (AHJ).

This NOA shall not be valid after the expiration date stated below. The Miami-Dade County Product Control Section (In Miami Dade County) and/or the AHJ (in areas other than Miami Dade County) reserve the right to have this product or material tested for quality assurance purposes. If this product or material fails to perform in the accepted manner, the manufacturer will incur the expense of such testing and the AHJ may immediately revoke, modify, or suspend the use of such product or material within their jurisdiction. RER reserves the right to revoke this acceptance, if it is determined by Miami-Dade County Product Control Section that this product or material fails to meet the requirements of the applicable building code.

This product is approved as described herein, and has been designed to comply with the Florida Building Code, including the High Velocity Hurricane Zone.

DESCRIPTION: Models EV, IV, LEV and LIV Aluminum Rooftop Vents

APPROVAL DOCUMENT: Drawing No. **686789**, titled "EV, IV, LEV and LIV Hurricane Vents", Sheets 1 through 7 of 7, dated 03/05/2013, with revision A dated 04/24/2013, prepared by ACME Engineering and Manufacturing Corporation, signed and sealed by Richard O. Boyette, P.E., bearing the Miami-Dade County Product Control approval stamp with the Notice of Acceptance number and approval date by the Miami-Dade County Product Control Section.

MISSILE IMPACT RATING: Large and Small Missile Impact Resistant

LABELING: Each unit shall bear a permanent label with the manufacturer's name or logo, Claremore, OK, model/series, and following statement: "Miami-Dade County Product Control Approved", unless otherwise noted herein.

RENEWAL of this NOA shall be considered after a renewal application has been filed and there has been no change in the applicable building code negatively affecting the performance of this product.

TERMINATION of this NOA will occur after the expiration date or if there has been a revision or change in the materials, use, and/or manufacture of the product or process. Misuse of this NOA as an endorsement of any product, for sales, advertising or any other purposes shall automatically terminate this NOA. Failure to comply with any section of this NOA shall be cause for termination and removal of NOA.

ADVERTISEMENT: The NOA number preceded by the words Miami-Dade County, Florida, and followed by the expiration date may be displayed in advertising literature. If any portion of the NOA is displayed, then it shall be done in its entirety.

INSPECTION: A copy of this entire NOA shall be provided to the user by the manufacturer or its distributors and shall be available for inspection at the job site at the request of the Building Official.

This NOA consists of this page 1 and evidence pages E-1 and E-2, as well as approval document mentioned above.

The submitted documentation was reviewed by **Carlos M. Utrera, P.E.**

MIAMI-DADE COUNTY APPROVED

05/13/2013

NOA No. 12-1011.18
Expiration Date: May 23, 2018
Approval Date: May 23, 2013

NOTICE OF ACCEPTANCE: EVIDENCE SUBMITTED

A. DRAWINGS

1. Drawing No. **686789**, titled "EV, IV, LEV and LIV Hurricane Vents", Sheets 1 through 7 of 7, dated 03/05/2013, with revision A dated 04/24/2013, prepared by ACME Engineering and Manufacturing Corporation, signed and sealed by Richard O. Boyette, P.E.

B. TESTS

1. Test report on 1) Uniform Static Air Pressure Test per FBC, TAS 202-94
   2) Large Missile Impact Test per FBC, TAS 201-94,
   along with marked-up drawings and installation diagram of an Aluminum Curb Mount Model IV/EV – Hooded Roof Vent, prepared by Architectural Testing, Inc., Test Report No. **B7291.01-801-18**, dated 02/22/2012, signed and sealed by Shawn G. Collins, P.E.
2. Test report on 1) Uniform Static Air Pressure Test per FBC, TAS 202-94
   2) Large Missile Impact Test per FBC, TAS 201-94,
   along with marked-up drawings and installation diagram of three Aluminum Curb Mount Model IV/EV – Hooded Roof Vents, prepared by Architectural Testing, Inc., Test Report No. **B7291.02-801-18**, dated 09/04/2012, signed and sealed by Vinu J. Abraham, P.E.
3. Test report on 1) Uniform Static Air Pressure Test per FBC, TAS 202-94
   2) Large Missile Impact Test per FBC, TAS 201-94,
   3) Cyclic Wind Pressure Test per FBC, TAS 203-94,
   along with marked-up drawings and installation diagram of three Aluminum Curb Mount Model IV – Hooded Roof Vents, prepared by Architectural Testing, Inc., Test Report No. **A7765.01-801-18**, dated 09/29/2011, signed and sealed by Shawn G. Collins, P.E.
4. Test report on 1) Uniform Static Air Pressure Test per FBC, TAS 202-94
   2) Large Missile Impact Test per FBC, TAS 201-94,
   3) Cyclic Wind Pressure Test per FBC, TAS 203-94,
   along with marked-up drawings and installation diagram of three Aluminum Curb Mount Model LEV – Louvered Roof Vents, prepared by Architectural Testing, Inc., Test Report No. **A7765.02-801-18**, dated 07/05/2011, with revision 2 dated 04/08/2013, signed and sealed by Shawn G. Collins, P.E.
5. Test report on 1) Uniform Static Air Pressure Test per FBC, TAS 202-94
   2) Large Missile Impact Test per FBC, TAS 201-94,
   along with marked-up drawings and installation diagram of an Aluminum Curb Mount Model LIV/LEV – Louvered Roof Vent, prepared by Architectural Testing, Inc., Test Report No. **B7290.01-801-18**, dated 03/20/2012, signed and sealed by Shawn G. Collins, P.E.
6. Test report on 1) Uniform Static Air Pressure Test per FBC, TAS 202-94
   2) Large Missile Impact Test per FBC, TAS 201-94,
   along with marked-up drawings and installation diagram of three Aluminum Curb Mount Model LIV/LEV – Louvered Roof Vents, prepared by Architectural Testing, Inc., Test Report No. **B7290.02-801-18**, dated 07/12/2012, signed and sealed by Shawn G. Collins, P.E.

05/13/2013

Carlos M. Utrera, P.E.
Product Control Examiner
NOA No. 12-1011.18
Expiration Date: May 23, 2018
Approval Date: May 23, 2013

NOTICE OF ACCEPTANCE: EVIDENCE SUBMITTED

C. CALCULATIONS

1. Anchor verification calculations, prepared by Rick Boyette Consulting, Inc, dated 03/19/2013, signed and sealed by Richard O. Boyette, P.E.
2. Anchor verification calculations, prepared by Rick Boyette Consulting, Inc, dated 06/25/2012, signed and sealed by Richard O. Boyette, P.E.

D. QUALITY ASSURANCE

1. Miami-Dade Department of Regulatory and Economic Resources (RER)

E. MATERIAL CERTIFICATIONS

1. None.

F. STATEMENTS

1. Statement letter of code conformance to 2010 FBC, issued by Rick Boyette Consulting, Inc, dated 03/19/2013, signed and sealed by Richard O. Boyette, P.E.
2. No financial interest letter issued by Rick Boyette Consulting, Inc, dated 06/25/2012, signed and sealed by Richard O. Boyette, P.E.

05/13/2013

Carlos M. Utrera, P.E.
Product Control Examiner
NOA No. 12-1011.18
Expiration Date: May 23, 2018
Approval Date: May 23, 2013

Large Missile Impact Resistant Max rated design pressure : +53.0 / -112.0 PSF

Legend

1. A & B are the model size of the vent.
2. The table to the right shows the principle dimensions for IV hurricane vents
3. The maximum vent weight and maximum curb weight are taken from the largest model sizes in each row
4. All dimensions listed, except for E,H, & J, are related to the throat dimensions, A & B

Notes:

a. This rooftop vent has been designed to comply with the Florida Building Code.
b. Roof structure must be designed to withstand the weight and loading transmitted by this rooftop vent.
c. This approval is for the structural capacity of the exterior housing only, it does not include any interior mechanism and/or electrical part.
d. This rooftop vent has not been tested for wind driven rain according to Florida Building Code, TAS 100(A). It cannot be installed within the ridge area FBC 1523.6.5.2.13.
e. All fasteners must be corrosion resistant.
f. The specimen for Miami-Dade County Performance Test as reported in ATI test as reported in test report No. A7765.01-801-18 was given a temporary designation "IV-Hooded"

EV Hurricane Vents

Size	A	B	C	D	E	F	G	H	J	C1	C2	C3	C4	Max Vent Weight	Max Curb Weight	Max Fan Weight	#1/4" Sheet Metal Screws*
1254	12	54	22	77	7	20	62	30	18	23.7	65.7	19.7	61.7	76	65	141	30
1354	13	54	23	77	7	21	62	30	18	24.7	65.7	20.7	61.7	80	65	145	30
1454	14	54	24	77	7	22	62	30	18	25.7	65.7	21.7	61.7	84	67	151	30
1554	15	54	26	77	7	23	62	30	18	26.7	65.7	22.7	61.7	85	67	152	30
1654	16	54	27	77	7	24	62	30	18	27.7	65.7	23.7	61.7	86	68	154	30
1754	17	54	29	77	8	25	62	31	18	28.7	65.7	24.7	61.7	90	68	158	32
1854	18	54	30	77	8	26	62	31	18	29.7	65.7	25.7	61.7	94	70	164	32
1954	19	54	32	77	9	27	62	32	18	30.7	65.7	26.7	61.7	101	71	172	32
2054	20	54	33	77	9	28	62	32	18	31.7	65.7	27.7	61.7	109	71	180	32
2154	21	54	35	77	9	29	62	32	18	32.7	65.7	28.7	61.7	119	72	191	32
2254	22	54	36	77	9	30	62	32	18	33.7	65.7	29.7	61.7	129	72	201	32
2354	23	54	38	77	11	31	62	34	18	34.7	65.7	30.7	61.7	137	73	210	34
2454	24	54	39	77	11	32	62	34	18	35.7	65.7	31.7	61.7	146	73	219	34
2554	25	54	42	77	13	33	62	36	18	36.7	65.7	32.7	61.7	150	75	225	34
2654	26	54	43	77	13	34	62	36	18	37.7	65.7	33.7	61.7	153	75	228	34
2754	27	54	44	77	13	35	62	36	18	38.7	65.7	34.7	61.7	157	76	233	34
2854	28	54	45	77	13	36	62	36	18	39.7	65.7	35.7	61.7	161	78	239	34
2954	29	54	47	77	13	37	62	36	18	40.7	65.7	36.7	61.7	165	78	243	36
3054	30	54	48	77	13	38	62	36	18	41.7	65.7	37.7	61.7	169	79	248	36
3154	31	54	50	77	15	39	62	38	18	42.7	65.7	38.7	61.7	173	79	252	36
3254	32	54	51	77	15	40	62	38	18	43.7	65.7	39.7	61.7	177	81	258	36
3354	33	54	52	77	15	41	62	38	18	44.7	65.7	40.7	61.7	181	81	262	36
3454	34	54	53	77	15	42	62	38	18	45.7	65.7	41.7	61.7	185	82	267	36
3554	35	54	54	77	15	43	62	38	18	46.7	65.7	42.7	61.7	189	84	273	38
3654	36	54	55	77	15	44	62	38	18	47.7	65.7	43.7	61.7	193	84	277	38
3754	37	54	56	77	15	45	62	38	18	48.7	65.7	44.7	61.7	198	85	283	38
3854	38	54	57	77	15	46	62	38	18	49.7	65.7	45.7	61.7	202	85	287	38
3954	39	54	58	77	15	47	62	38	18	50.7	65.7	46.7	61.7	207	86	293	38
4054	40	54	59	77	15	48	62	38	18	51.7	65.7	47.7	61.7	211	86	297	38
4154	41	54	61	77	15	49	62	38	18	52.7	65.7	48.7	61.7	216	88	304	40
4254	42	54	62	77	15	50	62	38	18	53.7	65.7	49.7	61.7	220	88	308	40
4354	43	54	65	77	17	51	62	40	18	54.7	65.7	50.7	61.7	224	89	313	40
4454	44	54	66	77	17	52	62	40	18	55.7	65.7	51.7	61.7	228	91	319	40
4554	45	54	67	77	17	53	62	40	18	56.7	65.7	52.7	61.7	233	91	324	40
4654	46	54	68	77	17	54	62	40	18	57.7	65.7	53.7	61.7	237	92	329	40
4754	47	54	69	77	17	55	62	40	18	58.7	65.7	54.7	61.7	241	92	333	42
4854	48	54	70	77	17	56	62	40	18	59.7	65.7	55.7	61.7	246	94	340	42
4954	49	54	72	77	19	57	62	42	18	60.7	65.7	56.7	61.7	251	94	345	42
5054	50	54	73	77	19	58	62	42	18	61.7	65.7	57.7	61.7	255	95	350	42
5154	51	54	74	77	19	59	62	42	18	62.7	65.7	58.7	61.7	260	97	357	42
5254	52	54	75	77	19	60	62	42	18	63.7	65.7	59.7	61.7	265	97	362	42
5354	53	54	76	77	19	61	62	42	18	64.7	65.7	60.7	61.7	270	98	368	44
5454	54	54	77	77	19	62	62	42	18	65.7	65.7	61.7	61.7	275	98	373	44

ALL DIMENSIONS ARE IN INCHES UNLESS OTHERWISE NOTED *VENT CURB TO ROOF CURB ANCHORS

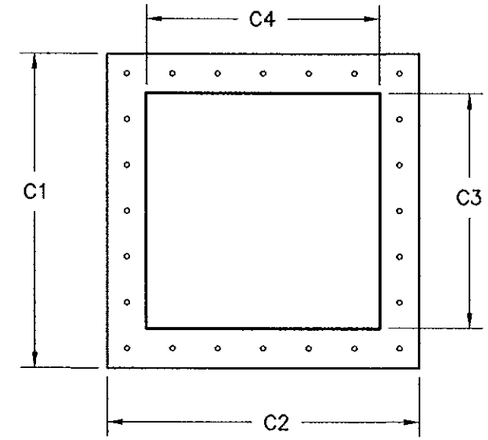

Plan View - Curb Installation

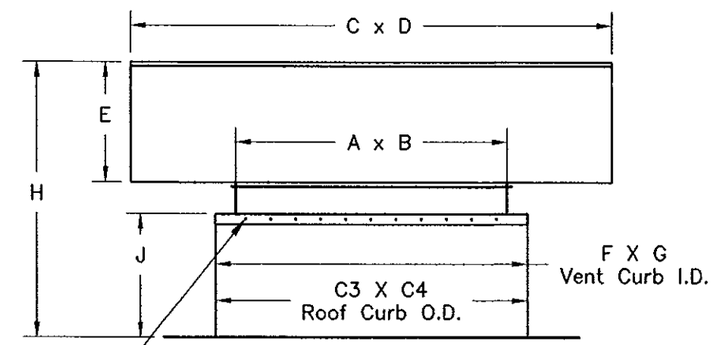

Vent Curb to Roof Curb Connection
¼" sheet metal screws at 6" O.C. maximum

Elevation View - Vent Installation

RICHARD DAVID BOYETTE
LICENSE
No 42485
STATE OF FLORIDA
PROFESSIONAL ENGINEER

APPROVED APR 26 2013

Richard Boyette, FL PE #42485
Rick Boyette Consulting Inc - CoA #9707
4031 Coconut Blvd
Royal Palm Beach FL 33411
561-790-5766

Approved as complying with the Florida Building Code
Date 05/23/2013
NOA# 12-1011.18
Miami Dade Product Control
By

DWG NO. 686789	Sheet 1/7		
TITLE EV & IV HURRICANE VENTS			
MAT'L			
DRAFTER TGB	DATE 3/5/13		
DESIGN ENG. TGB 3/5/13	RELEASED		
CHKD BY	MFG.	SCALE NTS	

LET.	REVISION RECORD	BY	CKD.	DATE
A	Changed Number of Anchors based on C3 & C4	TGB	TCR	4/24/13

Acme Engineering & Manufacturing Corp.
1820 N. York Street
Muskogee, OK 74403
918-682-7791

Large Missile Impact Resistant Max rated design pressure : +53.0 / -112.0 PSF

Legend

1. A & B are the model size of the vent.
2. The table to the right shows the principle dimensions for IV hurricane vents
3. The maximun vent weight and maximum curb weight are taken from the largest model sizes in each row
4. All dimensions listed, except for E,H, & J, are related to the throat dimensions, A & B

Notes:

a. This rooftop vent has been designed to comply with the Florida Building Code.
b. Roof structure must be designed to withstand the weight and loading transmitted by this rooftop vent.
c. This approval is for the structural capacity of the exterior housing only, it does not include any interior mechanism and/or electrical part.
d. This rooftop vent has not been tested for wind driven rain according to Florida Building Code, TAS 100(A). It cannot be installed within the ridge area FBC 1523.6.5.2.13.
e. All fasteners must be corrosion resistant.
f. The specimen for Miami-Dade County Performance Test as reported in ATI test as reported in test report No. A7765.01-801-18 was given a temporary designation 'IV-Hooded'

IV Hurricane Vents

Size	A	B	C	D	E	F	G	H	J	C1	C2	C3	C4	Max Vent Weight	Max Curb Weight	Max Fan Weight	# 1/4" Sheet Metal Screws*
1254	12	54	29	95	7	20	62	30	18	23.7	65.7	19.7	61.7	75	65	140	30
1354	13	54	31	95	8	21	62	31	18	24.7	65.7	20.7	61.7	80	65	145	30
1454	14	54	32	95	8	22	62	31	18	25.7	65.7	21.7	61.7	85	67	152	30
1554	15	54	35	95	9	23	62	32	18	26.7	65.7	22.7	61.7	92	67	159	30
1654	16	54	36	95	9	24	62	32	18	27.7	65.7	23.7	61.7	97	68	165	30
1754	17	54	39	95	10	25	62	33	18	28.7	65.7	24.7	61.7	111	68	179	32
1854	18	54	40	95	10	26	62	33	18	29.7	65.7	25.7	61.7	109	70	179	32
1954	19	54	42	95	11	27	62	34	18	30.7	65.7	26.7	61.7	132	71	203	32
2054	20	54	43	95	11	28	62	34	18	31.7	65.7	27.7	61.7	130	71	201	32
2154	21	54	45	95	11	29	62	34	18	32.7	65.7	28.7	61.7	152	72	224	32
2254	22	54	46	95	11	30	62	34	18	33.7	65.7	29.7	61.7	150	72	222	32
2354	23	54	49	95	11	31	62	34	18	34.7	65.7	30.7	61.7	173	73	246	34
2454	24	54	50	95	11	32	62	34	18	35.7	65.7	31.7	61.7	171	73	244	34
2554	25	54	53	95	13	33	62	36	18	36.7	65.7	32.7	61.7	177	75	252	34
2654	26	54	54	95	13	34	62	36	18	37.7	65.7	33.7	61.7	184	75	259	34
2754	27	54	55	95	13	35	62	36	18	38.7	65.7	34.7	61.7	191	76	267	34
2854	28	54	56	95	13	36	62	36	18	39.7	65.7	35.7	61.7	189	78	267	34
2954	29	54	59	95	13	37	62	36	18	40.7	65.7	36.7	61.7	199	78	277	36
3054	30	54	60	95	13	38	62	36	18	41.7	65.7	37.7	61.7	198	79	277	36
3154	31	54	64	95	15	39	62	38	18	42.7	65.7	38.7	61.7	202	79	281	36
3254	32	54	65	95	15	40	62	38	18	43.7	65.7	39.7	61.7	209	81	290	36
3354	33	54	66	95	15	41	62	38	18	44.7	65.7	40.7	61.7	215	81	296	36
3454	34	54	67	95	15	42	62	38	18	45.7	65.7	41.7	61.7	221	82	303	36
3554	35	54	68	95	15	43	62	38	18	46.7	65.7	42.7	61.7	227	84	311	38
3654	36	54	69	95	15	44	62	38	18	47.7	65.7	43.7	61.7	227	84	311	38
3754	37	54	71	95	17	45	62	40	18	48.7	65.7	44.7	61.7	234	85	319	38
3854	38	54	72	95	17	46	62	40	18	49.7	65.7	45.7	61.7	240	85	325	38
3954	39	54	73	95	17	47	62	40	18	50.7	65.7	46.7	61.7	246	86	332	38
4054	40	54	74	95	17	48	62	40	18	51.7	65.7	47.7	61.7	248	86	334	38
4154	41	54	77	95	18	49	62	41	18	52.7	65.7	48.7	61.7	256	88	344	40
4254	42	54	78	95	18	50	62	41	18	53.7	65.7	49.7	61.7	268	88	356	40
4354	43	54	82	95	20	51	62	43	18	54.7	65.7	50.7	61.7	260	89	349	40
4454	44	54	83	95	20	52	62	43	18	55.7	65.7	51.7	61.7	266	91	357	40
4554	45	54	84	95	20	53	62	43	18	56.7	65.7	52.7	61.7	272	91	363	40
4654	46	54	85	95	20	54	62	43	18	57.7	65.7	53.7	61.7	278	92	370	40
4754	47	54	86	95	20	55	62	43	18	58.7	65.7	54.7	61.7	283	92	375	42
4854	48	54	87	95	20	56	62	43	18	59.7	65.7	55.7	61.7	289	94	383	42
4954	49	54	90	95	23	57	62	46	18	60.7	65.7	56.7	61.7	291	94	385	42
5054	50	54	91	95	23	58	62	46	18	61.7	65.7	57.7	61.7	297	95	392	42
5154	51	54	92	95	23	59	62	46	18	62.7	65.7	58.7	61.7	302	97	399	42
5254	52	54	93	95	23	60	62	46	18	63.7	65.7	59.7	61.7	312	97	409	42
5354	53	54	94	95	23	61	62	46	18	64.7	65.7	60.7	61.7	312	98	410	44
5454	54	54	95	95	23	62	62	46	18	65.7	65.7	61.7	61.7	323	98	421	44

ALL DIMENSIONS ARE IN INCHES UNLESS OTHERWISE NOTED *VENT CURB TO ROOF CURB ANCHORS

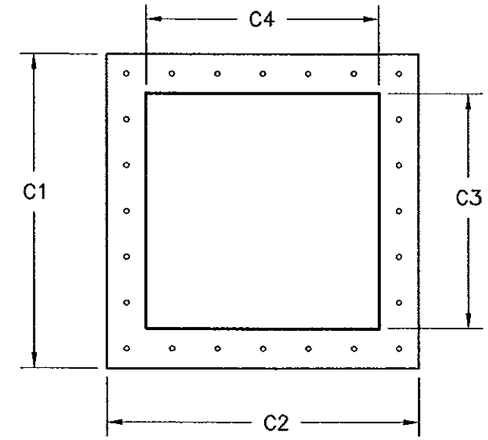

Plan View - Curb Installation

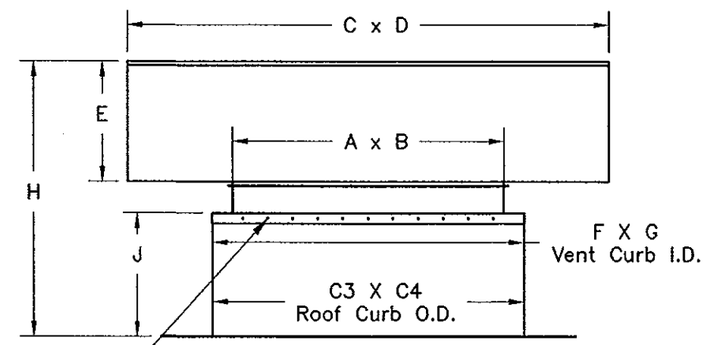

Vent Curb to Roof Curb Connection
¼" sheet metal screws at 6" O.C. maximum

Elevation View - Vent Installation

Dimensions (inches)

RICHARD OVID BOYETTE LICENSE No 42485 STATE OF FLORIDA PROFESSIONAL ENGINEER

APPROVED APR 26 2013

Richard Boyette, FL PE #42485
Rick Boyette Consulting Inc - CoA #9707
4031 Coconut Blvd
Royal Palm Beach FL 33411
561-790-5766

Approved as complying with the Florida Building Code
Date 05/23/2013
NOA# 12-1011.18
Miami Dade Product Control
By

DWG NO. 686789	Sheet 2/7
TITLE EV & IV HURRICANE VENTS	
MAT'L	
DRAFTER TGB	DATE 3/5/13
DESIGN ENG. TGB 3/5/13	RELEASED
CHKD BY	MFG.	SCALE NTS

LET.	REVISION RECORD	BY	CKD.	DATE
A	Changed Number of Anchors based on C3 & C4	TGB	TCR	4/24/13

Acme Engineering & Manufacturing Corp.
1820 N. York Street
Muskogee, OK 74403
918-682-7791

Large Missile Impact Resistant
Max rated design pressure : +53.0 / −112.0 PSF

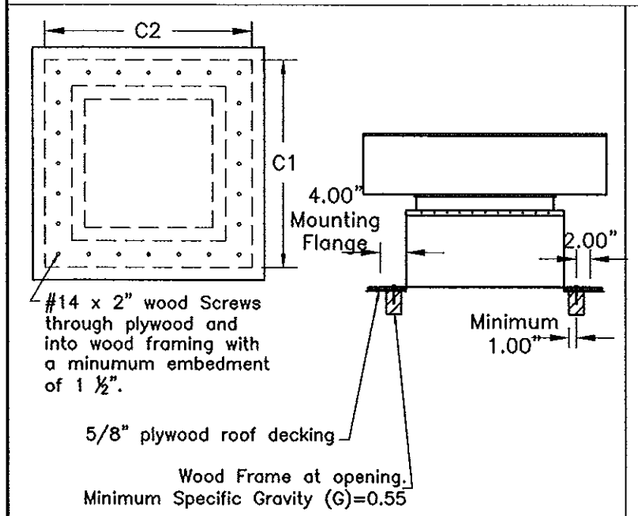

Wood Deck Installation

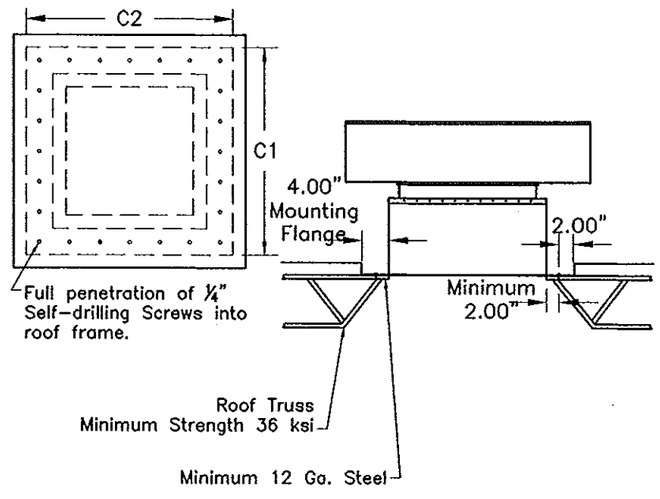

Metal Building Installation

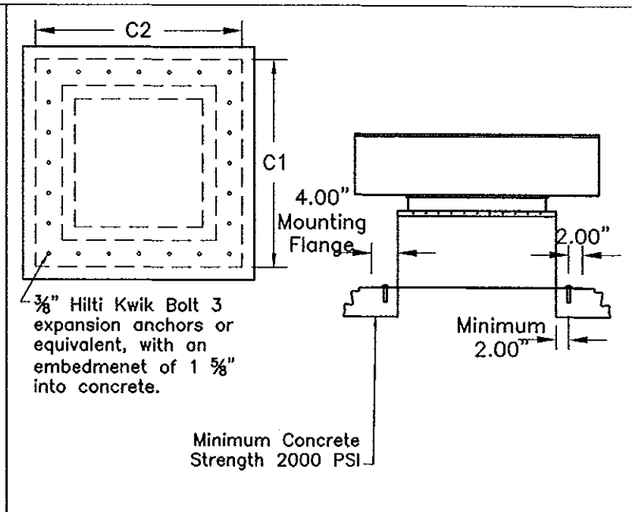

Concrete Deck Installation

Roof Curb Connection Anchors

Installation Type			Wood Deck	Metal Building	Concrete Deck
Anchor Type			#14 X 2" Wood Screws	1/4" Self Drilling Screws	3/8" Hilti Kwik Bolt 3 or Equiv
Size	C1	C2	# Anchors	# Anchors	# Anchors
1254	23.7	65.7	38	24	24
1354	24.7	65.7	38	26	26
1454	25.7	65.7	40	26	26
1554	26.7	65.7	40	26	26
1654	27.7	65.7	40	26	26
1754	28.7	65.7	40	26	26
1854	29.7	65.7	40	26	26
1954	30.7	65.7	42	26	26
2054	31.7	65.7	42	26	26
2154	32.7	65.7	42	28	28
2254	33.7	65.7	42	28	28
2354	34.7	65.7	42	28	28
2454	35.7	65.7	44	28	28
2554	36.7	65.7	44	28	28
2654	37.7	65.7	44	28	28
2754	38.7	65.7	44	28	28
2854	39.7	65.7	44	28	28
2954	40.7	65.7	46	30	30
3054	41.7	65.7	46	30	30
3154	42.7	65.7	46	30	30
3254	43.7	65.7	46	30	30
3354	44.7	65.7	46	30	30
3454	45.7	65.7	48	30	30
3554	46.7	65.7	48	30	30
3654	47.7	65.7	48	30	30
3754	48.7	65.7	48	32	32
3854	49.7	65.7	48	32	32
3954	50.7	65.7	50	32	32
4054	51.7	65.7	50	32	32
4154	52.7	65.7	50	32	32
4254	53.7	65.7	50	32	32
4354	54.7	65.7	50	32	32
4454	55.7	65.7	52	32	32
4554	56.7	65.7	52	34	34
4654	57.7	65.7	52	34	34
4754	58.7	65.7	52	34	34
4854	59.7	65.7	52	34	34
4954	60.7	65.7	54	34	34
5054	61.7	65.7	54	34	34
5154	62.7	65.7	54	34	34
5254	63.7	65.7	54	34	34
5354	64.7	65.7	54	36	36
5454	65.7	65.7	56	36	36

DIMENSIONS ARE IN INCHES UNLESS OTHERWISE SPECIFIE

RICHARD DAVID BOYETTE LICENSE No 42485 STATE OF FLORIDA PROFESSIONAL ENGINEER
APPROVED APR 26 2013

Richard Boyette, FL PE #42485
Rick Boyette Consulting Inc – CoA #9707
4031 Coconut Blvd
Royal Palm Beach FL 33411
561-790-5766

Approved as complying with the Florida Building Code
Date 05/23/2013
NOA# 12-1011.18
Miami Dade Product Control
By

DWG NO. 686789	Sheet 3/7
TITLE EV & IV Hurricane Vents	
MAT'L	
DRAFTER TGB	DATE 3/5/13
DESIGN ENG. TGB 3/5/13	RELEASED
CHKD BY / MFG.	SCALE NTS

LET.	REVISION RECORD	BY	CKD.	DATE
A	No Changes Required.	TGB	TCR	4/24/13

Acme Engineering & Manufacturing Corp.
1820 N. York Street
Muskogee, OK 74403
918-682-7791

Large Missile Impact Resistant
Max rated design pressure : +53.0 / -112.0 PSF

Item	Part Description	Material Description
1	Vent wall	0.062 Aluminum 3003-H14
2	End bracket	0.096 Aluminum 3003-H14
3	Intermediate Bracket	0.083 Aluminum 3003-H14
4	Hood Strut #1	0.084 Aluminum 3003-H14
5	Hood Strut #2	0.095 Aluminum 3003-H14
6	Hood Strut #3	0.091 Aluminum 3003-H14
7	Hood Strut #4	0.092 Aluminum 3003-H14
8	Hood Strut #5	0.094 Aluminum 3003-H14
9	Mounting Strut	0.129 Aluminum 6065-T6 Extruded Channel
10	Curb Side wall	0.052 G90 Galvanized Steel (30,000 psi yield)
11	Bird Screen	0.038 Galvanized Wire Mesh
12	Bird Screen Retainer	0.078 Aluminum 3003-H14

Notes:
a. This rooftop vent has been designed to comply with the Florida Building Code.
b. Roof structure must be designed to withstand the weight and loading transmitted by this rooftop vent.
c. This approval is for the structural capacity of the exterior housing only, it does not include any interior mechanism and/or electrical part.
d. This rooftop vent has not been tested for wind driven rain according to Florida Building Code, TAS 100(A). It cannot be installed within the ridge area FBC 1523.6.5.2.13.
e. All fasteners must be corrosion resistant.
f. The specimen for Miami-Dade County Performance Test as reported in ATI rest report No. A7765.01-801-18 was given a temporary designation 'IV-Hooded'

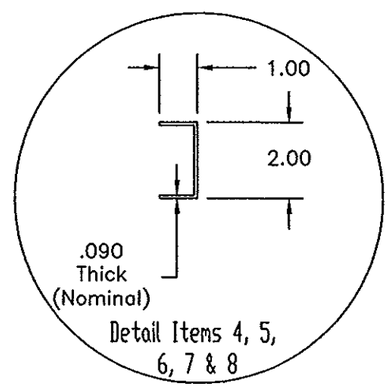

Detail Items 4, 5, 6, 7 & 8

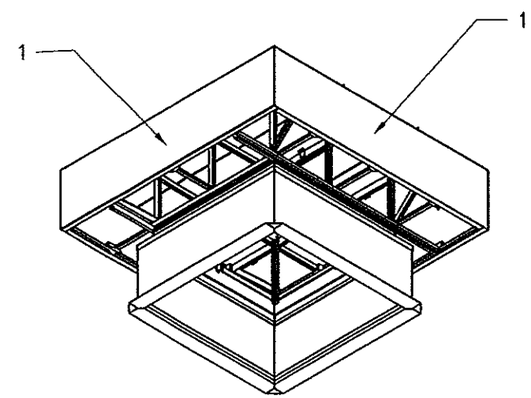

SECTION A-A

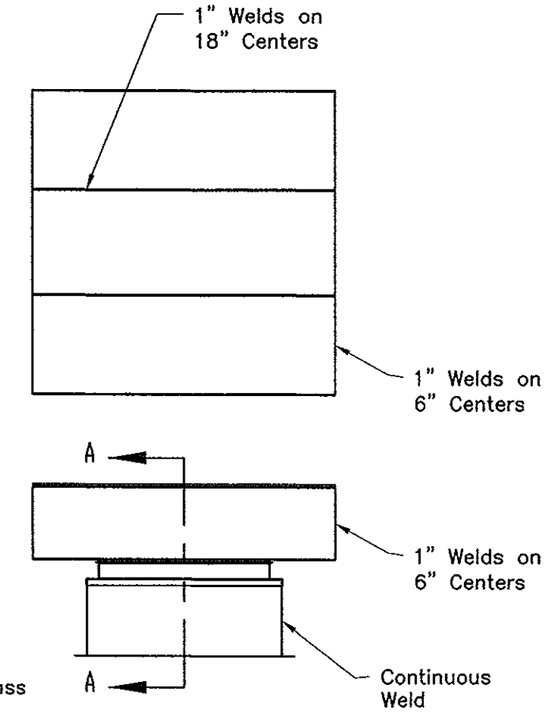

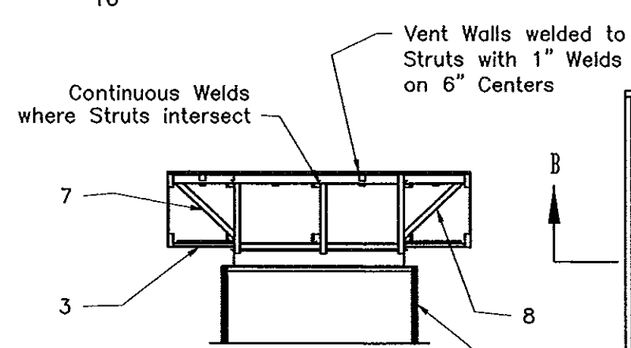

SECTION B-B

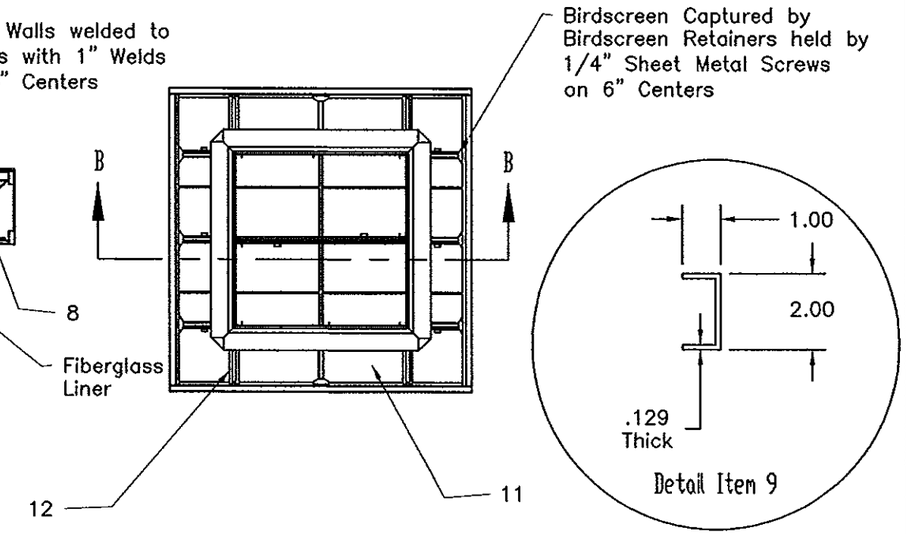

Detail Item 9

RICHARD DAVID BOYETTE
LICENSE
No 42485
STATE OF FLORIDA
PROFESSIONAL ENGINEER
APPROVED APR 26 2013

Richard Boyette, FL PE #42485
Rick Boyette Consulting Inc - CoA #9707
4031 Coconut Blvd
Royal Palm Beach FL 33411
561-790-5766

Approved as complying with the Florida Building Code
Date 05/23/2013
NOA# 12-1011.18
Miami Dade Product Control
By

DWG NO. 686789	Sheet 4/7
TITLE EV & IV HURRICANE VENTS	
MAT'L	
DRAFTER TCR	DATE 03/05/13
DESIGN ENG. TCR 03/05/13	RELEASED
CHKD BY / MFG.	SCALE NTS

LET.	REVISION RECORD	BY	CKD.	DATE
A	ADDED SECTION DETAILS FOR ITEMS 4 - 8	TCR	TGB	4/24/13

Acme Engineering & Manufacturing Corp.
1820 N. York Street
Muskogee, OK 74403
918-682-7791

Large Missile Impact Resistant
Max rated design pressure:
+53.0 / -112.0 PSF

Legend

1. A & B are the model size of the vent.
2. The table to the right shows the principle dimensions for LEV & LIV hurricane vents
3. The maximum vent weight and maximum curb weight are taken from the largest model sizes in each row
4. All dimensions listed, except for E,H, & J, are related to the throat dimensions, A & B

Notes

a. This rooftop vent has been designed to comply with the Florida Building Code.
b. Roof structure must be designed to withstand the weight and loading . transmitted by this rooftop vent
c. This approval is for the structural capacity of the exterior housing only, it does not include any interior mechanism and/or electrical part.
d. This rooftop vent has not been tested for wind driven rain according to Florida Building Code, TAS 100(A). It cannot be installed within the ridge area FBC 1523.6.5.2.13.
e. All fasteners must be corrosion resistant.
f. The specimen for Miami-Dade County Performance Test as reported in ATI test report No. Report No. A7765.02-801-18 was given a temporary designation 'EV-Louvered'.

LEV & LIV Hurricane Vents

Size	A	B	C	D	# of tiers	E	F	G	H	J	C1	C2	C3	C4	Max Vent Weight	Max Curb Weight	Max Fan Weight	#Anchors (1/4" SMS)*
1260	12	60	25.75	73.75	9	39.5	20	68	57.5	18	27.7	75.7	19.7	67.7	145	70	215	32
1360	13	60	26.75	73.75	9	39.5	21	68	57.5	18	28.7	75.7	20.7	67.7	150	71	221	32
1460	14	60	27.75	73.75	9	39.5	22	68	57.5	18	29.7	75.7	21.7	67.7	150	71	221	32
1560	15	60	28.75	73.75	9	39.5	23	68	57.5	18	30.7	75.7	22.7	67.7	150	72	222	32
1660	16	60	29.75	73.75	9	39.5	24	68	57.5	18	31.7	75.7	23.7	67.7	150	72	222	32
1760	17	60	30.75	73.75	9	39.5	25	68	57.5	18	32.7	75.7	24.7	67.7	160	73	233	34
1860	18	60	31.75	73.75	9	39.5	26	68	57.5	18	33.7	75.7	25.7	67.7	160	73	233	34
1960	19	60	32.75	73.75	9	39.5	27	68	57.5	18	34.7	75.7	26.7	67.7	160	75	235	34
2060	20	60	33.75	73.75	9	39.5	28	68	57.5	18	35.7	75.7	27.7	67.7	160	75	235	34
2160	21	60	34.75	73.75	9	39.5	29	68	57.5	18	36.7	75.7	28.7	67.7	165	76	241	34
2260	22	60	35.75	73.75	9	39.5	30	68	57.5	18	37.7	75.7	29.7	67.7	165	78	243	34
2360	23	60	36.75	73.75	9	39.5	31	68	57.5	18	38.7	75.7	30.7	67.7	165	78	243	36
2460	24	60	37.75	73.75	9	39.5	32	68	57.5	18	39.7	75.7	31.7	67.7	165	79	244	36
2560	25	60	38.75	73.75	9	39.5	33	68	57.5	18	40.7	75.7	32.7	67.7	172	79	251	36
2660	26	60	39.75	73.75	9	39.5	34	68	57.5	18	41.7	75.7	33.7	67.7	172	81	253	36
2760	27	60	40.75	73.75	9	39.5	35	68	57.5	18	42.7	75.7	34.7	67.7	172	81	253	36
2860	28	60	41.75	73.75	9	39.5	36	68	57.5	18	43.7	75.7	35.7	67.7	172	82	254	36
2960	29	60	42.75	73.75	9	39.5	37	68	57.5	18	44.7	75.7	36.7	67.7	178	84	262	38
3060	30	60	43.75	73.75	9	39.5	38	68	57.5	18	45.7	75.7	37.7	67.7	178	84	262	38
3160	31	60	44.75	73.75	9	39.5	39	68	57.5	18	46.7	75.7	38.7	67.7	178	85	263	38
3260	32	60	45.75	73.75	9	39.5	40	68	57.5	18	47.7	75.7	39.7	67.7	178	85	263	38
3360	33	60	46.75	73.75	9	39.5	41	68	57.5	18	48.7	75.7	40.7	67.7	184	86	270	38
3460	34	60	47.75	73.75	9	39.5	42	68	57.5	18	49.7	75.7	41.7	67.7	184	86	270	38
3560	35	60	48.75	73.75	9	39.5	43	68	57.5	18	50.7	75.7	42.7	67.7	184	88	272	40
3660	36	60	49.75	73.75	9	39.5	44	68	57.5	18	51.7	75.7	43.7	67.7	184	88	272	40
3760	37	60	50.75	73.75	9	39.5	45	68	57.5	18	52.7	75.7	44.7	67.7	192	89	281	40
3860	38	60	51.75	73.75	9	39.5	46	68	57.5	18	53.7	75.7	45.7	67.7	192	91	283	40
3960	39	60	52.75	73.75	9	39.5	47	68	57.5	18	54.7	75.7	46.7	67.7	192	91	283	40
4060	40	60	53.75	73.75	9	39.5	48	68	57.5	18	55.7	75.7	47.7	67.7	192	92	284	40
4160	41	60	54.75	73.75	9	39.5	49	68	57.5	18	56.7	75.7	48.7	67.7	200	92	292	42
4260	42	60	55.75	73.75	9	39.5	50	68	57.5	18	57.7	75.7	49.7	67.7	200	94	294	42
4360	43	60	56.75	73.75	9	39.5	51	68	57.5	18	58.7	75.7	50.7	67.7	200	94	294	42
4460	44	60	57.75	73.75	9	39.5	52	68	57.5	18	59.7	75.7	51.7	67.7	200	95	295	42
4560	45	60	58.75	73.75	9	39.5	53	68	57.5	18	60.7	75.7	52.7	67.7	205	97	302	42
4660	46	60	59.75	73.75	9	39.5	54	68	57.5	18	61.7	75.7	53.7	67.7	205	97	302	42
4760	47	60	60.75	73.75	9	39.5	55	68	57.5	18	62.7	75.7	54.7	67.7	205	98	303	44
4860	48	60	61.75	73.75	9	39.5	56	68	57.5	18	63.7	75.7	55.7	67.7	205	98	303	44
4960	49	60	62.75	73.75	9	39.5	57	68	57.5	18	64.7	75.7	56.7	67.7	212	100	312	44
5060	50	60	63.75	73.75	9	39.5	58	68	57.5	18	65.7	75.7	57.7	67.7	212	100	312	44
5160	51	60	64.75	73.75	9	39.5	59	68	57.5	18	66.7	75.7	58.7	67.7	212	100	312	44
5260	52	60	65.75	73.75	9	39.5	60	68	57.5	18	67.7	75.7	59.7	67.7	212	100	312	44
5360	53	60	66.75	73.75	9	39.5	61	68	57.5	18	68.7	75.7	60.7	67.7	218	102	320	46
5460	54	60	67.75	73.75	9	39.5	62	68	57.5	18	69.7	75.7	61.7	67.7	218	103	321	46
5560	55	60	68.75	73.75	9	39.5	63	68	57.5	18	70.7	75.7	62.7	67.7	218	103	321	46
5660	56	60	69.75	73.75	9	39.5	64	68	57.5	18	71.7	75.7	63.7	67.7	218	105	323	46
5760	57	60	70.75	73.75	9	39.5	65	68	57.5	18	72.7	75.7	64.7	67.7	224	105	329	46
5860	58	60	71.75	73.75	9	39.5	66	68	57.5	18	73.7	75.7	65.7	67.7	224	106	330	46
5960	59	60	72.75	73.75	9	39.5	67	68	57.5	18	74.7	75.7	66.7	67.7	224	106	330	48
6060	60	60	73.75	73.75	9	39.5	68	68	57.5	18	75.7	75.7	67.7	67.7	224	108	332	48

ALL DIMENSIONS ARE IN INCHES UNLESS OTHERWISE NOTED

*VENT CURB TO ROOF CURB ANCHORS

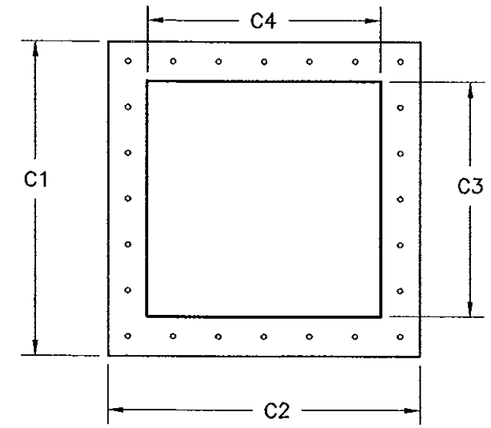

Plan View - Curb Installation

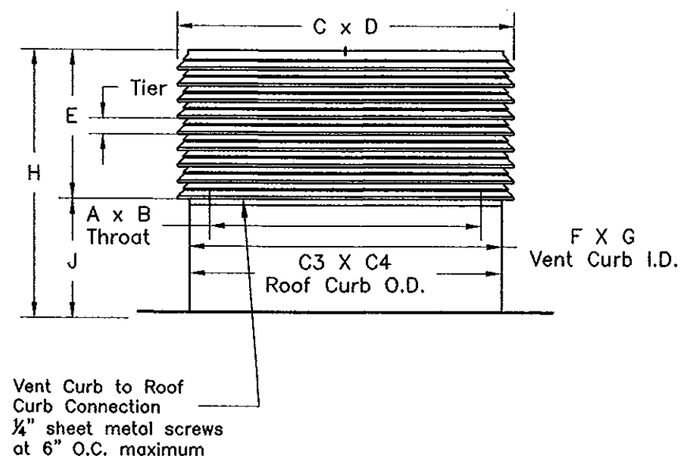

Elevation View - Vent Installation

Dimensions (inches)

RICHARD DAVID BOYETTE LICENSE No 42485 STATE OF FLORIDA PROFESSIONAL ENGINEER

APPROVED APR 26 2013

Richard Boyette, FL PE #42485
Rick Boyette Consulting Inc - CoA #9707
4031 Coconut Blvd
Royal Palm Beach FL 33411
561-790-5766

Approved as complying with the Florida Building Code
Date 05/23/2013
NOA# 12-1011.18
Miami Dade Product Control
By

DWG NO. 686789	Sheet 5/7		
TITLE LEV & LIV HURRICANE VENTS			
MAT'L			
DRAFTER TGB	DATE 6/5/13		
DESIGN ENG. TGB 3/5/13	RELEASED		
CHKD BY	MFG.	SCALE NTS	

LET.	REVISION RECORD	BY	CKD.	DATE
A	Changed Number of Anchors based on C3 & C4	TGB	TCR	4/24/13

Acme Engineering & Manufacturing Corp.
1820 N. York Street
Muskogee, OK 74403
918-682-7791

Large Missile Impact Resistant
Max rated design pressure : +53.0 / −112.0 PSF

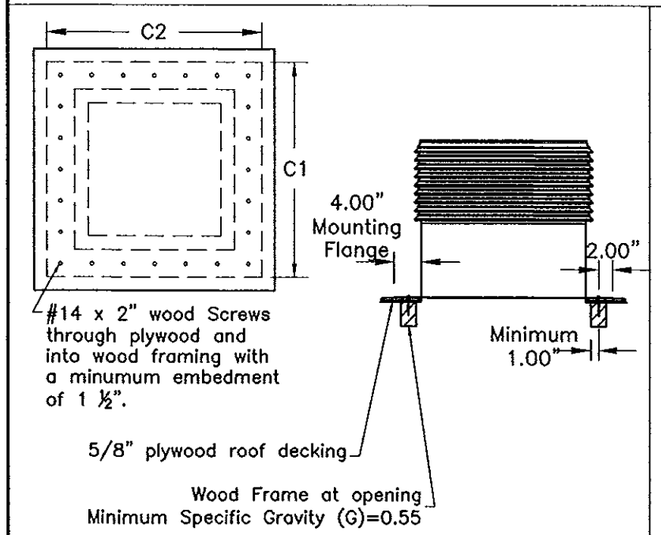

Wood Deck Installation

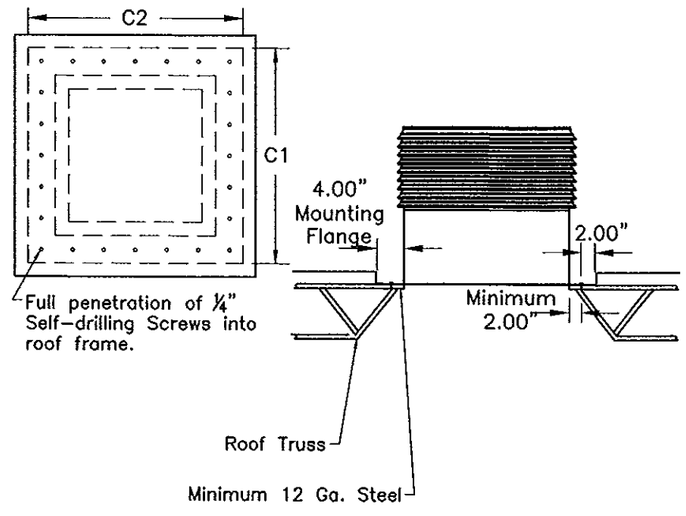

Metal Building Installation

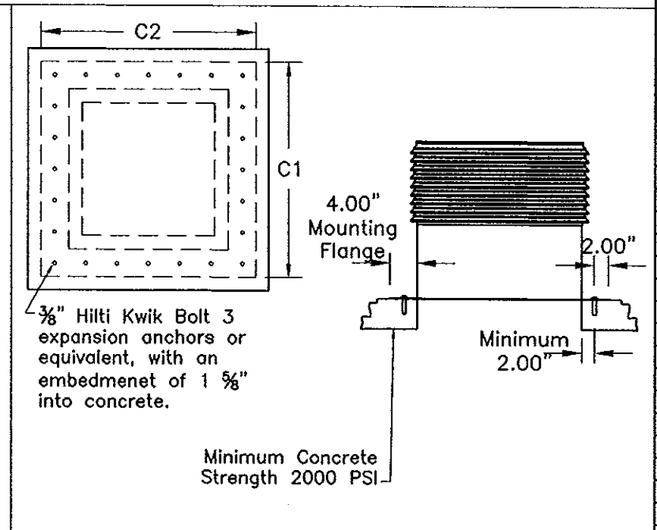

Concrete Deck Installation

Roof Curb Connection Anchors

Installation Type			Wood Deck	Metal Building	Concrete Deck
Anchor Type			#14 X 2" Wood Screws	1/4" Self Drilling Screws	3/8" Hilti Kwik Bolt 3 or Equiv
Size	C1	C2	# Anchors	# Anchors	# Anchors
1260	27.7	75.7	44	28	28
1360	28.7	75.7	44	28	28
1460	29.7	75.7	44	28	28
1560	30.7	75.7	46	28	28
1660	31.7	75.7	46	28	28
1760	32.7	75.7	46	30	30
1860	33.7	75.7	46	30	30
1960	34.7	75.7	46	30	30
2060	35.7	75.7	48	30	30
2160	36.7	75.7	48	30	30
2260	37.7	75.7	48	30	30
2360	38.7	75.7	48	30	30
2460	39.7	75.7	48	30	30
2560	40.7	75.7	50	32	32
2660	41.7	75.7	50	32	32
2760	42.7	75.7	50	32	32
2860	43.7	75.7	50	32	32
2960	44.7	75.7	50	32	32
3060	45.7	75.7	52	32	32
3160	46.7	75.7	52	32	32
3260	47.7	75.7	52	32	32
3360	48.7	75.7	52	34	34
3460	49.7	75.7	52	34	34
3560	50.7	75.7	54	34	34
3660	51.7	75.7	54	34	34
3760	52.7	75.7	54	34	34
3860	53.7	75.7	54	34	34
3960	54.7	75.7	54	34	34
4060	55.7	75.7	56	34	34
4160	56.7	75.7	56	36	36
4260	57.7	75.7	56	36	36
4360	58.7	75.7	56	36	36
4460	59.7	75.7	56	36	36
4560	60.7	75.7	58	36	36
4660	61.7	75.7	58	36	36
4760	62.7	75.7	58	36	36
4860	63.7	75.7	58	36	36
4960	64.7	75.7	58	38	38
5060	65.7	75.7	60	38	38
5160	66.7	75.7	60	38	38
5260	67.7	75.7	60	38	38
5360	68.7	75.7	60	38	38
5460	69.7	75.7	60	38	38
5560	70.7	75.7	62	38	38
5660	71.7	75.7	62	38	38
5760	72.7	75.7	62	40	40
5860	73.7	75.7	62	40	40
5960	74.7	75.7	62	40	40
6060	75.7	75.7	64	40	40

DIMENSIONS ARE IN INCHES UNLESS OTHERWISE SPECIFI

RICHARD OVID BOYETTE LICENSE No 42485 STATE OF FLORIDA PROFESSIONAL ENGINEER

APPROVED APR 26 2013

Richard Boyette, FL PE #42485
Rick Boyette Consulting Inc – CoA #9707
4031 Coconut Blvd
Royal Palm Beach FL 33411
561-790-5766

Approved as complying with the Florida Building Code
Date 05/23/2013
NOA# 12-1011.15
Miami Dade Product Control
By

LET.	REVISION RECORD	BY	CKD.	DATE
A	No Changes Required.	TGB	TCR	4/24/13

DWG NO. 686789 Sheet 6/7
TITLE LEV & LIV Hurricane Vents
MAT'L
DRAFTER TGB DATE 3/5/13
DESIGN ENG. TGB 3/5/13 RELEASED
CHKD BY MFG. SCALE NTS

Acme Engineering & Manufacturing Corp.
1820 N. York Street
Muskogee, OK 74403
918-682-7791

Large Missile Impact Resistant
Max rated design pressure : +53.0 / -112.0 PSF

Item	Part Description	Material Description
1	Louver	.096 Aluminum 6065-T6 Extrusion
2	Corner Strut	.113 Aluminum 3003-H14
3	Single Strut	.148 Aluminum 3003-H14
4	Double Strut	.111 Aluminum 3003-H15
5	Curb Side Wall	.052 G90 Galvanized Steel (30,000 psi yield)
6	Bird Screen	0.034 Galvanized Wire Mesh

Approved as complying with the
Florida Building Code
Date 05/23/2013
NOA# 12-1011.16
Miami Dade Product Control
By

Notes: a. This rooftop vent has been designed to comply with the Florida Building Code.
b. Roof structure must be designed to withstand the weight and loading transmitted by this rooftop vent.
c. This approval is for the structural capacity of the exterior housing only, it does not include any interior mechanism and/or electrical part.
d. This rooftop vent has not been tested for wind driven rain according to Florida Building Code, TAS 100(A). It cannot be installed within the ridge area FBC 1523.6.5.2.13.
e. All fasteners must be corrosion resistant.
f. The specimen for Miami-Dade County Performance Test as reported in ATI rest report No. A7765.01-801-18 was given a temporary designation 'EV-Louvered'

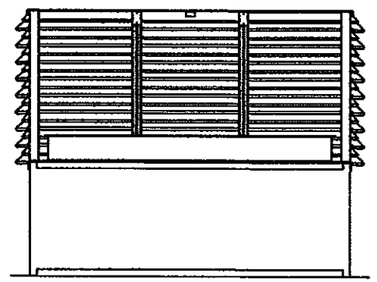

SECTION A-A

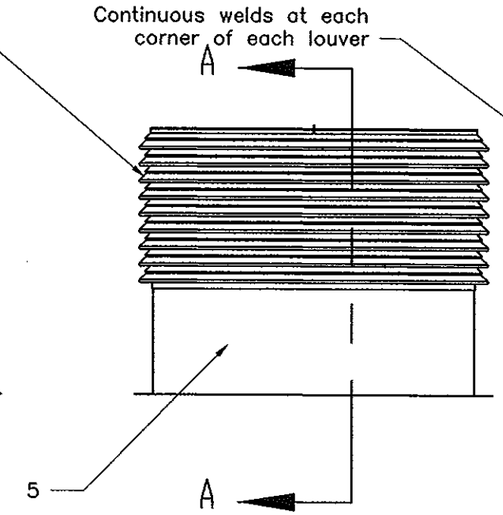

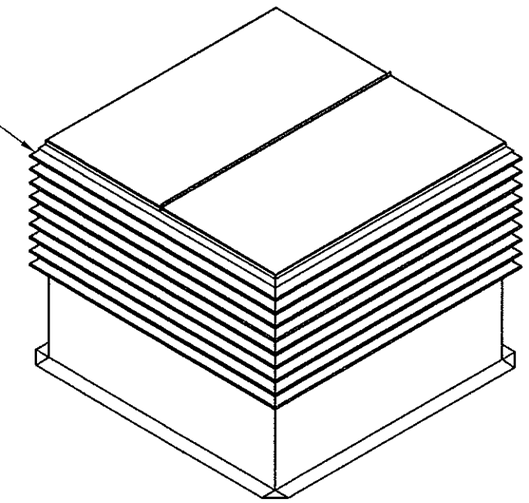

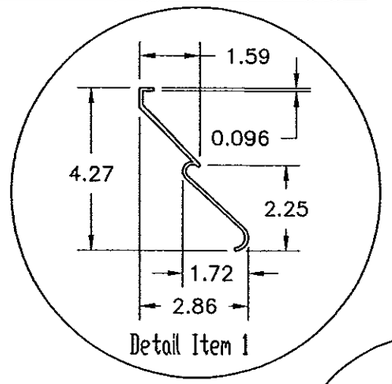

Detail Item 1

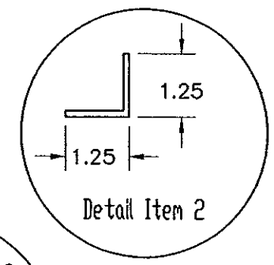

Detail Item 2

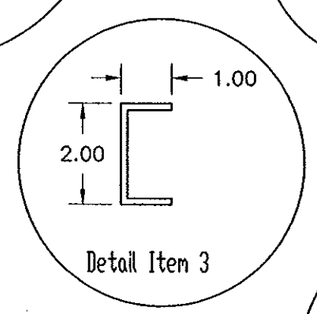

Detail Item 3

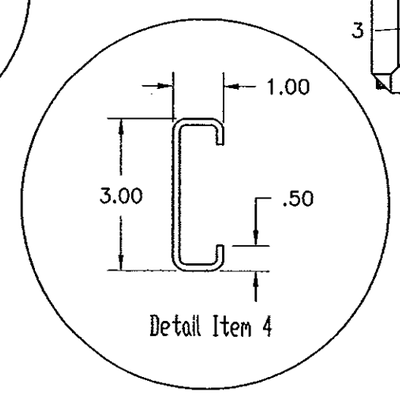

Detail Item 4

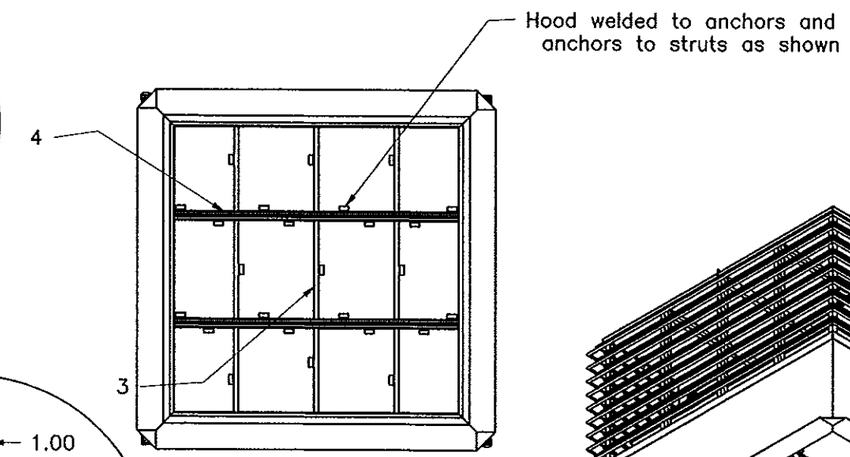

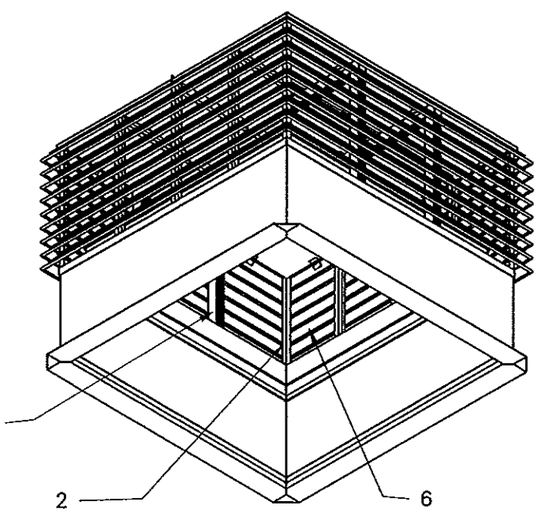

RICHARD DAVID BOYETTE
LICENSE
No 42485
STATE OF FLORIDA
PROFESSIONAL ENGINEER

APPROVED APR 26 2013

Richard Boyette, FL PE #42485
Rick Boyette Consulting Inc - CoA #9707
4031 Coconut Blvd
Royal Palm Beach FL 33411
561-790-5766

DWG NO.	686789 Sheet 7/7
TITLE	LEV & LIV HURRICANE VENTS
MAT'L	
DRAFTER	TCR
DATE	03/05/13
DESIGN ENG.	TCR 03/05/13
RELEASED	
CHKD BY	
MFG.	
SCALE	NTS

LET.	REVISION RECORD	BY	CKD.	DATE
A	ADDED SECTION DETAILS FOR ITEMS 2, 3, AND 4	TCR	TGB	4/24/13

Acme Engineering & Manufacturing Corp.
1820 N. York Street
Muskogee, OK 74403
918-682-7791