MIAMI-DADE COUNTY
PRODUCT CONTROL SECTION
11805 SW 26 Street, Room 208
Miami, Florida 33175-2474
T (786) 315-2590 F (786) 315-2599
www.miamidade.gov/economy

DEPARTMENT OF REGULATORY AND ECONOMIC RESOURCES (RER)
BOARD AND CODE ADMINISTRATION DIVISION

NOTICE OF ACCEPTANCE (NOA)

Majestic Entries, LLC
5850 Peachtree Industrial Blvd.
Norcross, Georgia 30071

SCOPE:

This NOA is being issued under the applicable rules and regulations governing the use of construction materials. The documentation submitted has been reviewed and accepted by Miami-Dade County RER -Product Control Section to be used in Miami Dade County and other areas where allowed by the Authority Having Jurisdiction (AHJ).

This NOA shall not be valid after the expiration date stated below. The Miami-Dade County Product Control Section (In Miami Dade County) and/or the AHJ (in areas other than Miami Dade County) reserve the right to have this product or material tested for quality assurance purposes. If this product or material fails to perform in the accepted manner, the manufacturer will incur the expense of such testing and the AHJ may immediately revoke, modify, or suspend the use of such product or material within their jurisdiction. RER reserves the right to revoke this acceptance, if it is determined by Miami-Dade County Product Control Section that this product or material fails to meet the requirements of the applicable building code.

This product is approved as described herein, and has been designed to comply with the Florida Building Code, including the High Velocity Hurricane Zone.

DESCRIPTION: Series "Loyal Iron" glazed (Arch Top) double outswing Steel Entry Doors

APPROVAL DOCUMENT: Drawing No "**MAJ0003**" Rev **D**, titled "Steel Entry Arch Top Double Doors", sheets 1 through 7 of 7, prepared by the PTC, LLC, dated 07-25-08 and last revised on 10/12/12, signed and sealed by Robert J. Amoruso, P.E., bearing the Miami-Dade County Product Control Revision stamp with the Notice of Acceptance number and expiration date by the Miami-Dade County Product Control Section.

MISSILE IMPACT RATING: Large and Small Missile Impact Resistant

Limitations:

1. Item #4, insulated SGP laminated glass to be per glazing detail, sheet 7 of the approval Dwgs.
2. The threshold/sill to be welded to frame jambs per note #3, sheet 7 of the Dwgs and caulked with perimeter sealants both at exterior and interior sides.

LABELING: Each unit shall bear a permanent label with the manufacturer's name or logo, city, state and series and following statement: "Miami-Dade County Product Control Approved", noted herein.

RENEWAL of this NOA shall be considered after a renewal application has been filed and there has been no change in the applicable building code negatively affecting the performance of this product.

TERMINATION of this NOA will occur after the expiration date or if there has been a revision or change in the materials, use, and/or manufacture of the product or process. Misuse of this NOA as an endorsement of any product, for sales, advertising or any other purposes shall automatically terminate this NOA. Failure to comply with any section of this NOA shall be cause for termination and removal of NOA.

ADVERTISEMENT: The NOA number preceded by the words Miami-Dade County, Florida, and followed by the expiration date may be displayed in advertising literature. If any portion of the NOA is displayed, then it shall be done in its entirety.

INSPECTION: A copy of this entire NOA shall be provided to the user by the manufacturer or its distributors and shall be available for inspection at the job site at the request of the Building Official.

This NOA **revises NOA # 08-0402.08** and consists of this page 1 and evidence pages E-1, as well as approval document mentioned above.

The submitted documentation was reviewed by **Ishaq I. Chanda, P.E.**

MIAMI-DADE COUNTY APPROVED
1/3/13

NOTICE OF ACCEPTANCE: EVIDENCE SUBMITTED

A. DRAWINGS

1. Manufacturer's parts drawings and sections (Submitted under file # **08-0402.08**)
2. **APPROVAL DOCUMENT:** Drawing No "**MAJ0003**" Rev **D**, titled "Steel Entry Arch Top Double Doors", sheets 1 through 7 of 7, prepared by the PTC, LLC, dated 07-25-08 and last revised on 10/12/12, signed and sealed by Robert J. Amoruso, P.E.

Note: This revision consists of FBC 2010 notes & plant re-location address only.

B. TESTS (Submitted under file # **08-0418.02**)

1. Test reports on: 1) Air Infiltration Test, per FBC, TAS 202-94
   2) Uniform Static Air Pressure Test, Loading per FBC TAS 202-94
   3) Water Resistance Test, per FBC, TAS 202-94
   4) Large Missile Impact Test per FBC, TAS 201-94
   5) Cyclic Wind Pressure Loading per FBC, TAS 203-94
   6) Forced Entry Test, per FBC 2411 3.2.1, TAS 202-94

Along with marked-up drawings and installation diagram of Glazed Arch-Top Outswing Steel Entry Door, prepared by Certified Testing Laboratories, Test Report No. **CTL 1638-W-2** dated 01/30/08, signed and sealed by Ramesh Patel, P.E.

Note: This test report has been revised by an addendum letter issued by Certified Testing Laboratories, dated 05/28/08, signed and sealed by Ramesh Patel, P.E.

2. Additional test per TAS 201/203-94, issued by Certified Testing Laboratories, signed and sealed by Ramesh Patel, P.E.

C. CALCULATIONS

1. Anchor verification calculations and structural analysis, complying with FBC-2007, prepared by PTC, LLC, dated 03-28-08, signed and sealed by Douglas J. McDougall, P.E. (Submitted under file # **08-0418.02**)
2. Glazing complies w/ ASTME-1300-02 & -04

D. QUALITY ASSURANCE

1. Miami Dade Department of Regulatory and Economic Resources (RER).

E. MATERIAL CERTIFICATIONS

1. Notice of Acceptance No. **11-0624.02** issued to E.I. DuPont DeNemours & Co., Inc. for their "**DuPont Sentry Glass ® Interlayer**", expiring on 01/14/17.

F. STATEMENTS

1. Statement letter of conformance to FBC 2007 & FBC 2010 and letter of no financial interest, prepared by PTC, LLC, dated 10/12/12, signed and sealed by Robert J. Amoruso, P.E.
2. Lab compliance as part of the above referenced test report.
3. Certificate of Organization of Majestic Entries, LLC, issued by State of Georgia dated 08-04-11, signed by Brian P. Kemp, Secretary of State.
4. Distribution agreement between Majestic Entries, LLC and Loyal Wrought Iron Co, China, signed by Mark Higgins and Yan Xiao Jun Yan, respectively.

G. OTHER

1. This NOA **revises** NOA # **08-0418.02**, expiring on January 28, 2014.
2. Test proposal, dated 06-09-08 and 06-03-09 approved by BCCO.

Ishaq I. Chanda

Ishaq I. Chanda, P.E.
Product Control Examiner
NOA No. 12-1017.04
Expiration Date: January 28, 2014
Approval Date: January 10, 2013

MAJESTIC ENTRIES, LLC

6'0" X 10'0" OUTSWING LOYAL IRON SERIES GLAZED STEEL ENTRY ARCH TOP DOUBLE DOOR

INSTALLATION ANCHORAGE DETAILS

GENERAL NOTES:

1. THE PRODUCT SHOWN HEREIN IS DESIGNED AND MANUFACTURED TO COMPLY WITH THE 2007 AND 2010 FLORIDA BUILDING CODE (FBC) INCLUDING HIGH VELOCITY HURRICANE ZONE (HVHZ) REQUIREMENTS.
2. THE PRODUCT DETAILS CONTAINED HEREIN ARE BASED UPON SIGNED AND SEALED TEST REPORT # CTL-1638W-2, AND ASSOCIATED LABORATORY STAMPED DRAWINGS.
3. THE PRODUCT HAS BEEN EVALUATED FOR CONFORMANCE TO THE STANDARDS LISTED IN THE 2007 FLORIDA BUILDING CODE (FBC) AND IS IN COMPLIANCE WITH SAID STANDARDS, INCLUDING HIGH VELOCITY HURRICANE ZONE (HVHZ) REQUIREMENTS.
4. ADEQUACY OF THE EXISTING STRUCTURAL CONCRETE / MASONRY AND 2X FRAMING AS A MAIN WIND FORCE RESISTING SYSTEM CAPABLE OF WITHSTANDING AND TRANSFERRING APPLIED PRODUCT LOADS TO THE FOUNDATION IS THE RESPONSIBILITY OF THE ENGINEER OR ARCHITECT OF RECORD.
5. 1X AND 2X BUCKS (WHEN USED) SHALL BE DESIGNED AND ANCHORED TO PROPERLY TRANSFER ALL LOADS TO THE STRUCTURE. BUCK DESIGN AND INSTALLATION IS THE RESPONSIBILITY OF THE ENGINEER OR ARCHITECT OF RECORD.
6. THE INSTALLATION DETAILS DESCRIBED HEREIN ARE GENERIC AND MAY NOT REFLECT ACTUAL CONDITIONS FOR A SPECIFIC SITE. IF SITE CONDITIONS CAUSE INSTALLATION TO DEVIATE FROM THE REQUIREMENTS DETAILED HEREIN, THEN THE BUILDING OFFICIAL MAY ELECT ONE OF THE FOLLOWING OPTIONS:
   - A. OUTSIDE HVHZ: REQUIRE THAT A LICENSED ENGINEER OR ARCHITECT PREPARE AND SUBMIT SITE SPECIFIC DOCUMENTS FOR USE WITH THIS DOCUMENT TO BE REVIEWED BY THE AUTHORITY HAVING JURISDICTION.
   - B. INSIDE HVHZ: REQUIRE THAT A ONE-TIME SITE SPECIFIC APPROVAL BE APPLIED FOR AND OBTAINED FROM THE MIAMI-DADE COUNTY PRODUCT CONTROL DIVISION.
7. IN HVHZ AREAS WHERE WINDBORNE DEBRIS PROTECTION REQUIREMENTS EXIST, USE OF AN IMPACT PROTECTIVE SYSTEM IS NOT REQUIRED FOR THE PRODUCT HEREIN.
8. DOOR FRAME AND PANEL MATERIAL: STEEL - STANDARD GB / T700 - 1988 GRADE Q235 (AASTM A283M GRADE A.)
9. GLASS MEETS THE REQUIREMENTS OF ASTM E1300-04e1 GLASS CHARTS. SEE SHEET 7 FOR GLAZING DETAILS.
10. DESIGNATION "X" STANDS FOR THE FOLLOWING: X: OPERABLE PANEL
11. A 1/3 INCREASE IN ALLOWABLE STRESS FOR WIND LOADS WAS NOT USED IN THE DESIGN OF THE PRODUCT(S) SHOWN HEREIN, EXCEPT WOOD.
12. IRON WORK SUCH AS DECORATIVE GRILLS, ETC., IS NOT PART OF THIS APPROVAL.

INSTALLATION NOTES:

1. ONE (1) INSTALLATION ANCHOR IS REQUIRED AT EACH ANCHOR LOCATION SHOWN.
2. THE NUMBER OF INSTALLATION ANCHORS DEPICTED IS THE MINIMUM NUMBER OF ANCHORS TO BE USED FOR PRODUCT INSTALLATION.
3. SHIM AS REQUIRED AT EACH INSTALLATION ANCHOR WITH LOAD BEARING SHIM(S). MAXIMUM ALLOWABLE SHIM SIZE OF 1/4 INCH. SHIM WHERE SPACE OF 1/16 INCH OR GREATER OCCURS. SHIM(S) SHALL BE CONSTRUCTED OF HIGH DENSITY PLASTIC OR BETTER.
4. FOR INSTALLATION INTO WOOD FRAMING, USE 3/8" LAG SCREWS OF SUFFICIENT LENGTH TO ACHIEVE 3 INCH MINIMUM EMBEDMENT.
5. MINIMUM EMBEDMENT AND EDGE DISTANCE EXCLUDE WALL FINISHES (INCLUDING BUT NOT LIMITED TO STUCCO, FOAM, BRICK VENEER, AND SIDING). WALL FINSHES ARE NOT PART OF THIS APPROVAL.
7. INSTALLATION ANCHORS AND ASSOCIATED HARDWARE MUST BE MADE OF CORROSION RESISTANT MATERIAL OR HAVE A CORROSION RESISTANT COATING.
8. INSTALLATION ANCHORS SHALL BE INSTALLED IN ACCORDANCE WITH ANCHOR MANUFACTURER'S INSTALLATION INSTRUCTIONS, AND ANCHORS SHALL NOT BE USED IN SUBSTRATES WITH STRENGTHS LESS THAN THE MINIMUM STRENGTH SPECIFIED BY THE ANCHOR MANUFACTURER. BELOW.
9. INSTALLATION ANCHOR CAPACITIES FOR PRODUCTS HEREIN ARE BASED ON WOOD SUBSTRATE MATERIALS WITH A MINIMUM SPECIFC GRAVITY OF 0.55.

PRODUCT REVIEWED
as complying with the Florida
Building Code
Acceptance No 12-1017-04
Expiration Date JAN 14, 2014
By Shang L. Chang
Miami Dade Product Control

TABLE OF CONTENTS

SHEET	SHEET DESCRIPTION
1	GENERAL AND INSTALLATION NOTES
2	ELEVATIONS AND ANCHOR LAYOUT
3	VERTICAL SECTIONS
4	VERTICAL SECTIONS
5	HORIZONTAL SECTIONS
6	COMPONENTS
7	BILL OF MATERIALS AND GLAZING DETAIL

DESIGN PRESSURE RATING (PSF)		IMPACT RATING
WATER INFILTRATION REQUIRED	WATER INFILTRATION NOT REQUIRED	LARGE MISSLE IMPACT
±66.70	±67.50	

REVISIONS:

REV	DESCRIPTION	DATE	BY
D	UPDATE TO 2010 FBC	8/3/12	TJH
C	REVISED ADDRESS	5/11/11	RJA
B	ADDED TO TABLE OF CONTENTS	7/25/08	SMC

MAJESTIC ENTRIES, LLC
5850 PEACHTREE INDUSTRIAL BLVD., NORCROSS, GA 30071

TITLE: GLAZED STEEL ENTRY ARCH TOP DOUBLE DOOR
GENERAL AND INSTALLATION NOTES

PREPARED BY: PTC, LLC
Phone 321.690.1788 Fax 321.690.1789

DRN: JKJ | DATE: 05/11/11
SCALE: N.T.S. | DWG. NO: MAJ0003
REV: D | SHEET: 1 OF 7

ROBERT J. AMORUSO, P.E.
FLORIDA P.E. NO. 49752

ROBERT JAMES AMORUSO
LICENSE
No 49752
10/12/12
STATE OF FLORIDA
PROFESSIONAL ENGINEER

PTC PRODUCT DESIGN GROUP, LLC
P.O. Box 520775
Longwood, FL 32752-0775
FBPE CERT. OF AUTH. NO. 25935

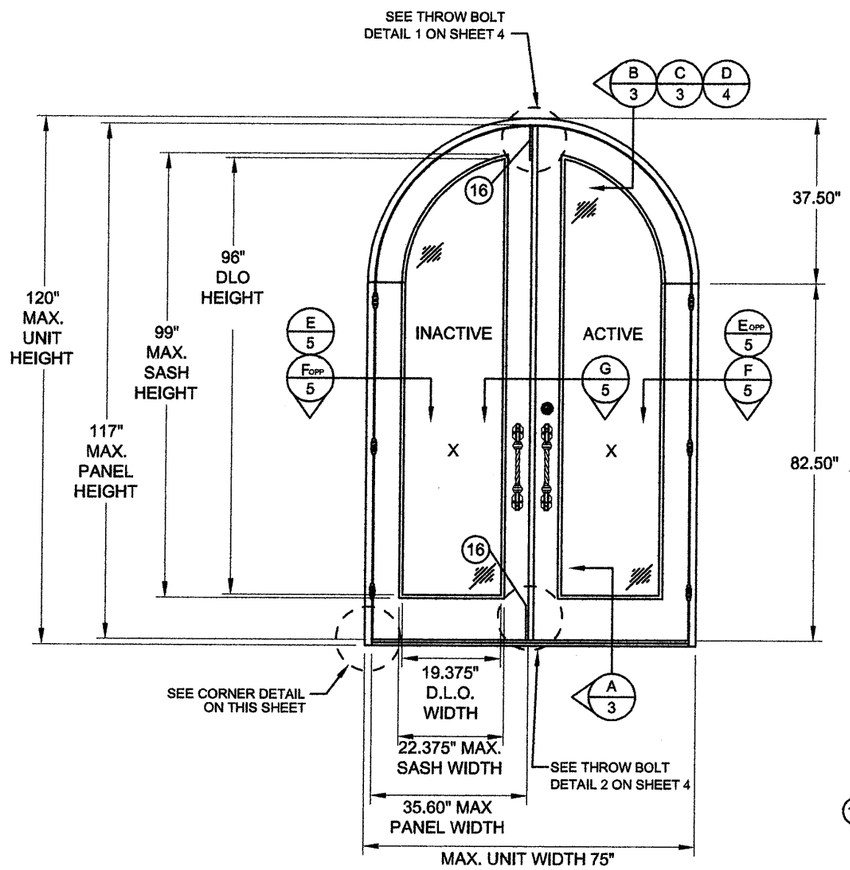

ELEVATION

EXTERIOR VIEW

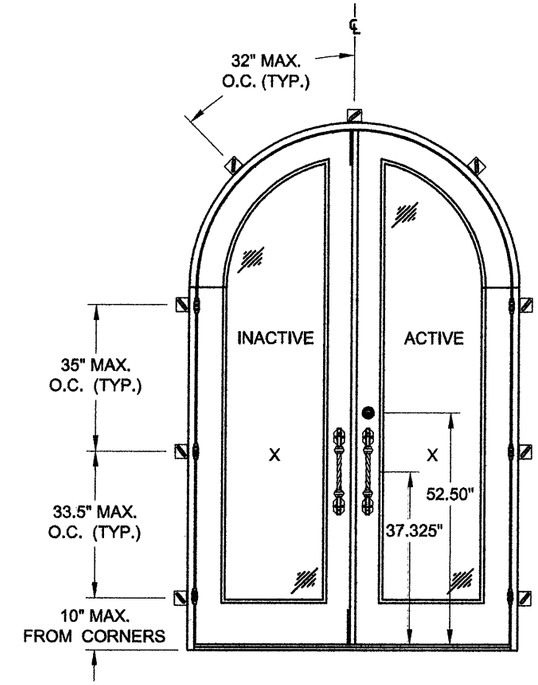

ANCHOR LAYOUT

EXTERIOR VIEW

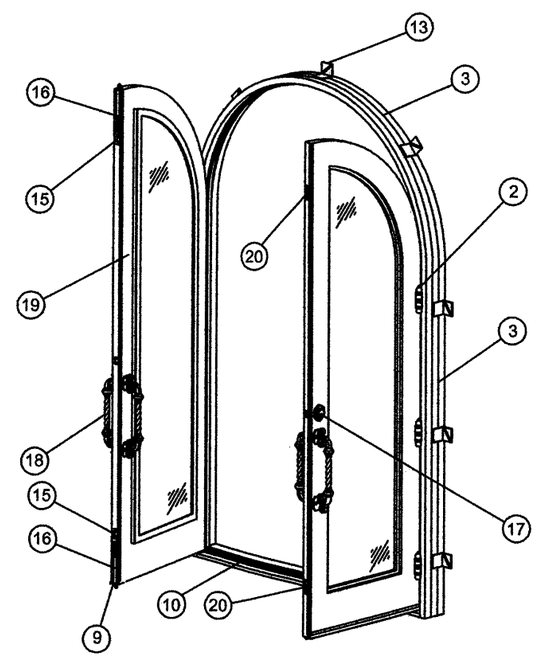

DETAILED ELEVATION

EXTERIOR VIEW

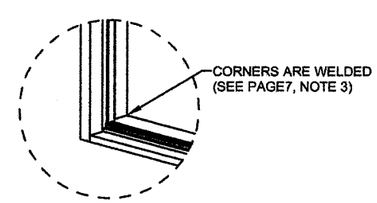

B CORNER DETAIL

PRODUCT REVISED
as complying with the Florida
Building Code
Acceptance No 12-1017.04
Expiration Date 1/14/14
By Shang I. Chang
Miami Dade Product Control

REVISIONS:

REV	DESCRIPTION	DATE	BY
D	UPDATED TO 2010 FBC	8/3/12	TJH
C	REVISED ADDRESS	5/11/11	RJA
B	ADDED CORNER DETAILS	7/25/08	SMC

MAJESTIC ENTRIES, LLC, LLC
5850 PEACHTREE INDUSTRIAL BLVD., NORCROSS, GA 30092
TITLE: GLAZED STEEL ENTRY ARCH TOP DOUBLE DOOR ELEVATION AND ANCHOR LAYOUT

DRN: JKJ | DATE: 05/11/11
SCALE: N.T.S. | DWG. NO: MAJ0003
REV: D | SHEET: 2 OF 7

PREPARED BY:
PTC, LLC
Phone 321.690.1788 Fax 321.690.1789

ROBERT J. AMORUSO, P.E.
FLORIDA P.E. NO. 49752

ROBERT JAMES AMORUSO
LICENSE
No 49752
STATE OF
FLORIDA
PROFESSIONAL ENGINEER

PTC PRODUCT DESIGN GROUP, LLC
P.O. Box 520775
Longwood, FL 32752-0775
FBPE CERT. OF AUTH. NO. 25935

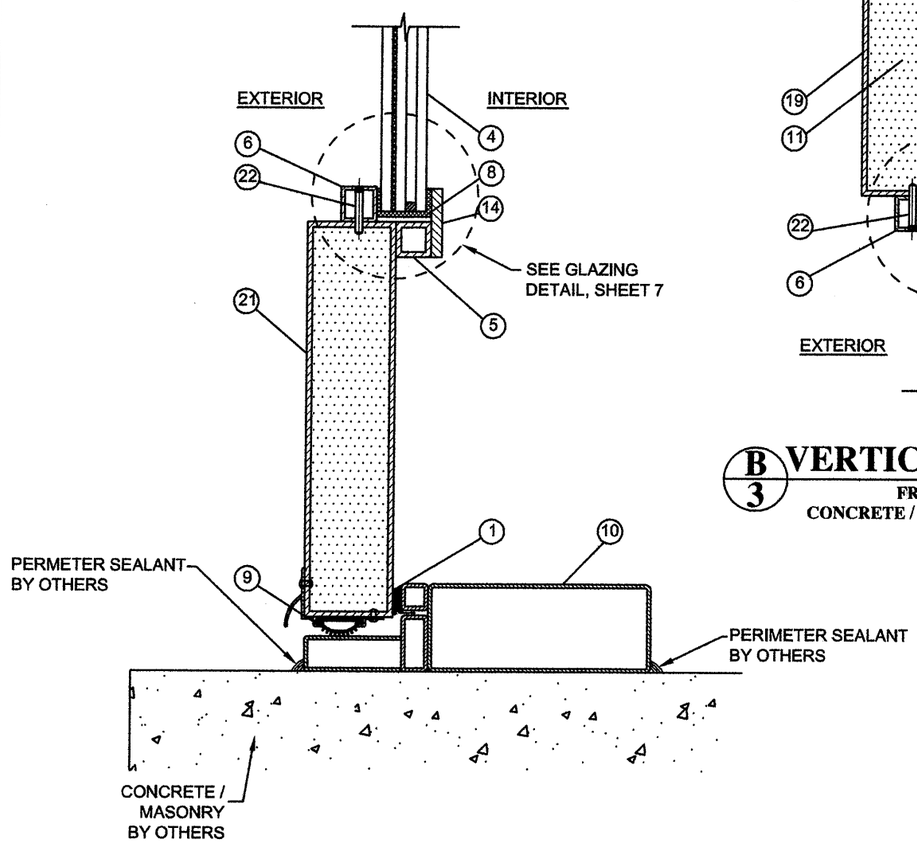

A/3 VERTICAL SECTION

THRESHOLD
CONCRETE / MASONRY SUBSTRATE

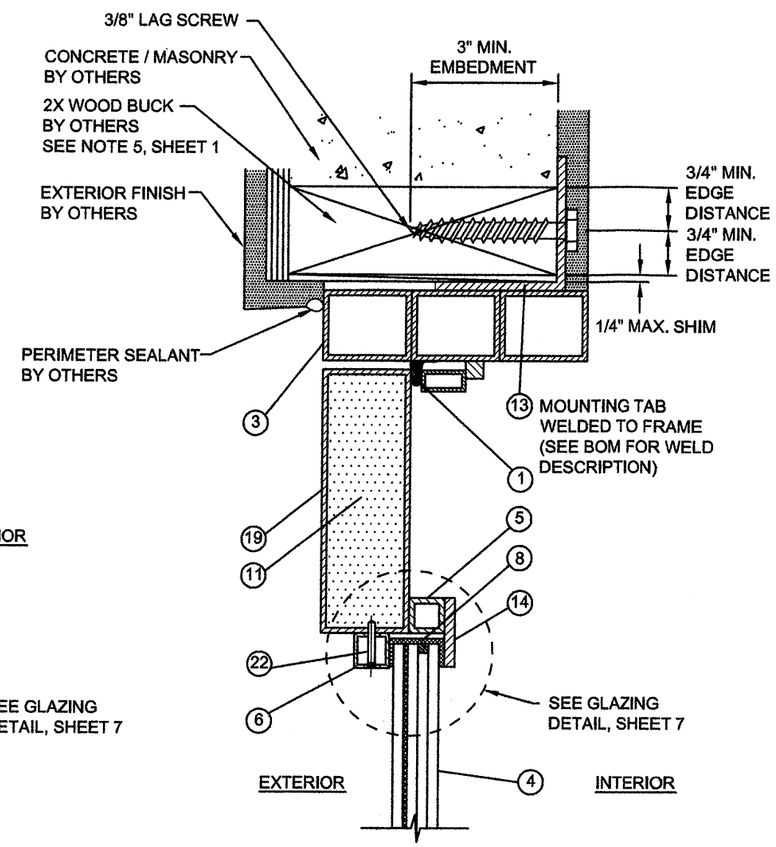

B/3 VERTICAL SECTION

FRAME / HEAD
CONCRETE / MASONRY SUBSTRATE

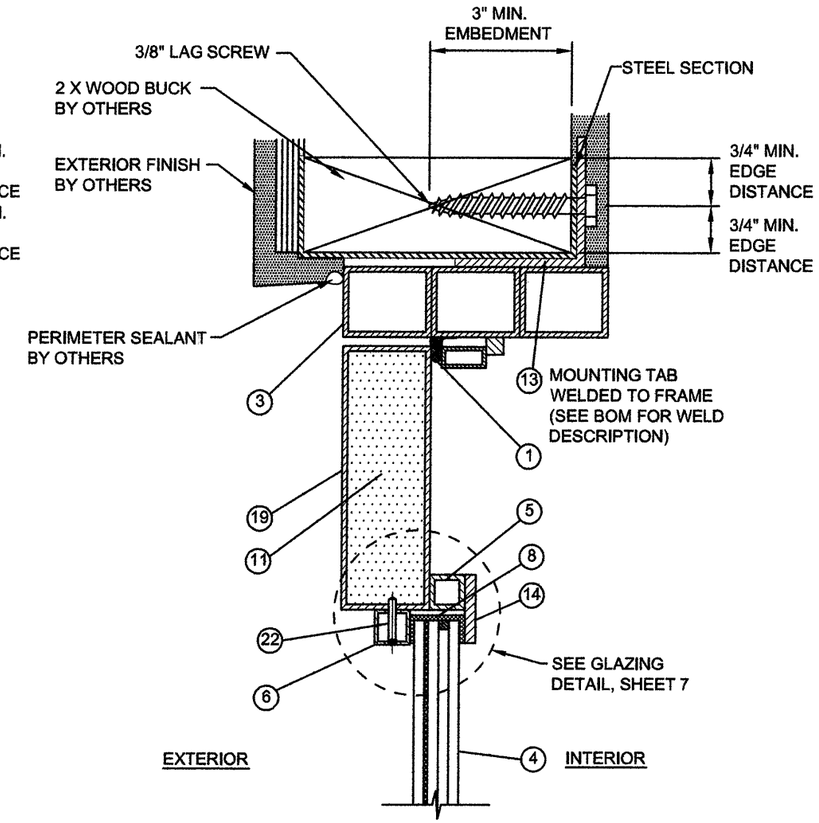

C/3 VERTICAL SECTION

FRAME / HEAD
STEEL STUD W/ WOOD SUBSTRATE

PRODUCT REVIEWED
in complying with the Florida Building Code
Acceptance No 12-1017.04
Expiration Date 01/17/14
By Miami Dade Product Control

REVISIONS:

REV	DESCRIPTION	DATE	BY
D	UPDATE TO 2010 FBC	8/29/12	TJH
C	REVISED ADDRESS	5/11/11	RJA
B	REVISED MOUNTING CLIPS	7/25/08	SMC

MAJESTIC ENTRIES, LLC
5850 PEACHTREE INDUSTRIAL BLVD., NORCROSS, GA 30071
TITLE: GLAZED STEEL ENTRY ARCH TOP DOUBLE DOOR
VERTICAL SECTIONS

DRN: JKJ | DATE: 05/11/11
SCALE: N.T.S. | DWG. NO: MAJ0003
REV: D | SHEET: 3 OF 7

PREPARED BY:
PTC, LLC
Phone 321.690.1788 Fax 321.690.1789

ROBERT J. AMORUSO, P.E.
FLORIDA P.E. NO. 49752

ROBERT JAMES AMORUSO
LICENSE
No 49752
10/12/12
STATE OF
FLORIDA
PROFESSIONAL ENGINEER

PTC PRODUCT DESIGN GROUP, LLC
P.O. Box 520775
Longwood, FL 32752-0775
FBPE CERT. OF AUTH. NO. 25935

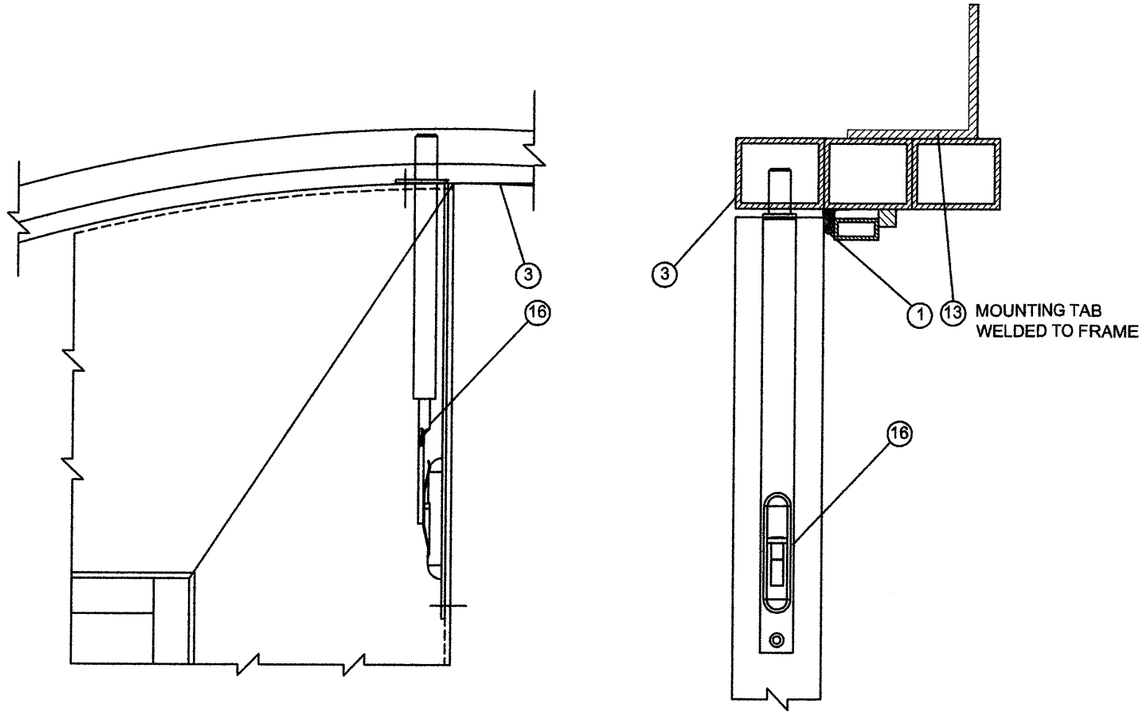

THROW BOLT DETAIL 1

AT HEAD

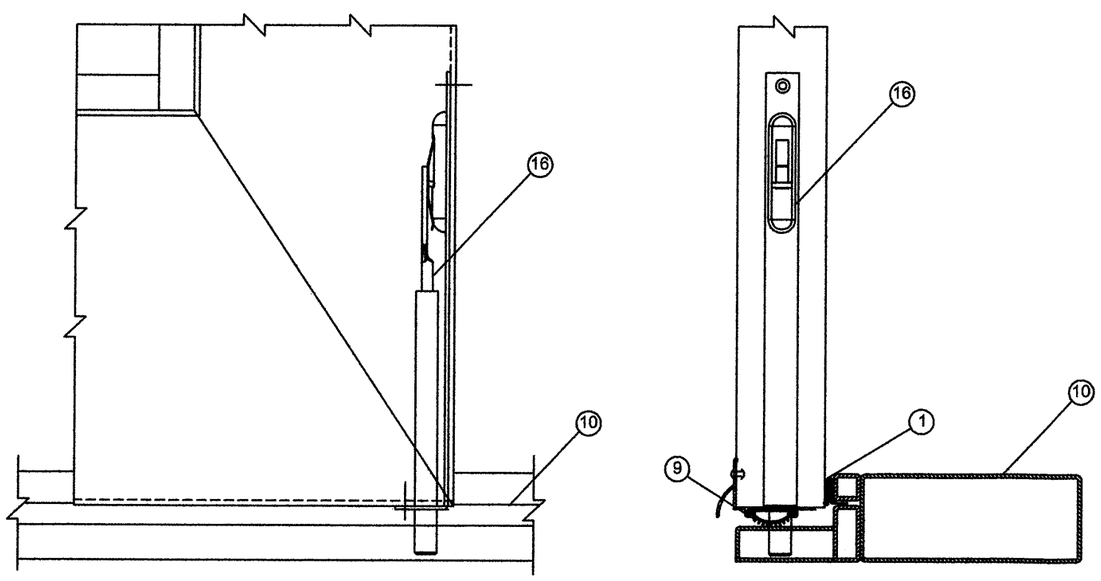

THROW BOLT DETAIL 2

AT SILL

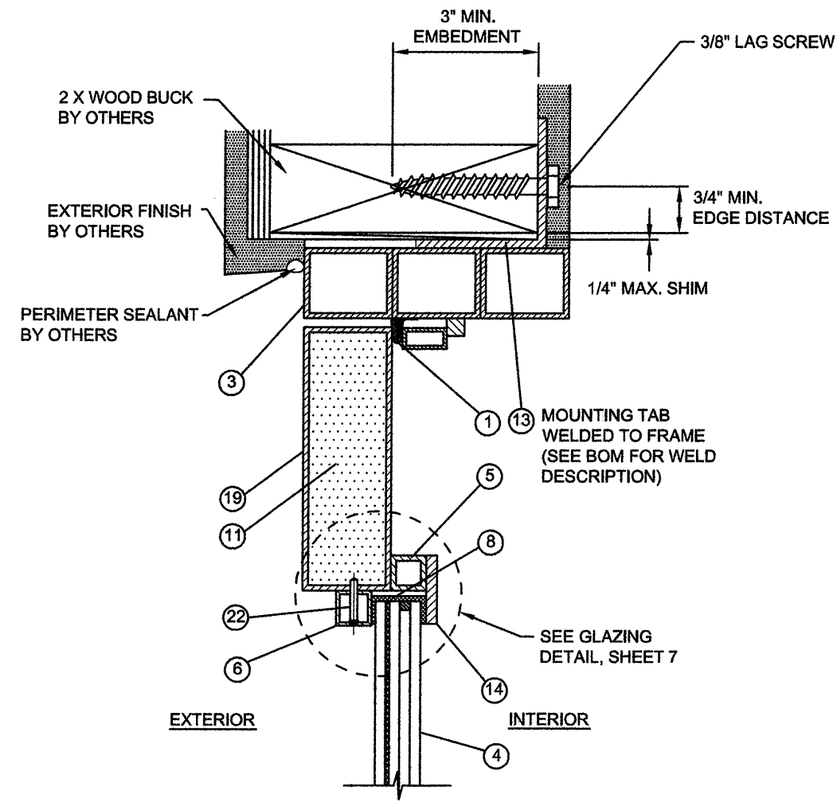

D/4 VERTICAL SECTION

FRAME / HEAD
WOOD SUBSTRATE

PRODUCT REVIEWED
as complying with the Florida
Building Code
Acceptance No 12-1017.04
Expiration Date 1/14/14
By
Miami Dade Product Control

REVISIONS:

REV	DESCRIPTION	DATE	BY
D	UPDATED TO 2010 FBC	8/3/12	TJH
C	REVISED ADDRESS	5/11/11	RJA
B	REVISED MOUNTING CLIPS	7/25/08	SMC

MAJESTIC ENTRIES, LLC
5850 PEACHTREE INDUSTRIAL BLVD., NORCROSS, GA 30071

TITLE: GLAZED STEEL ENTRY ARCH TOP DOUBLE DOOR
VERTICAL SECTIONS

DRN: JKJ
DATE: 05/11/11
SCALE: N.T.S.
DWG. NO: MAJ0003
REV: D
SHEET: 4 OF 7

PREPARED BY:
PTC, LLC
Phone 321.690.1788 Fax 321.690.1789

ROBERT J. AMORUSO, P.E.
FLORIDA P.E. NO. 49752

ROBERT JAMES AMORUSO
LICENSE
No 49752
STATE OF
FLORIDA
PROFESSIONAL ENGINEER
8/12/12

PTC PRODUCT DESIGN
GROUP, LLC
P.O. Box 520775
Longwood, FL 32752-0775
FBPE CERT. OF AUTH. NO. 25935

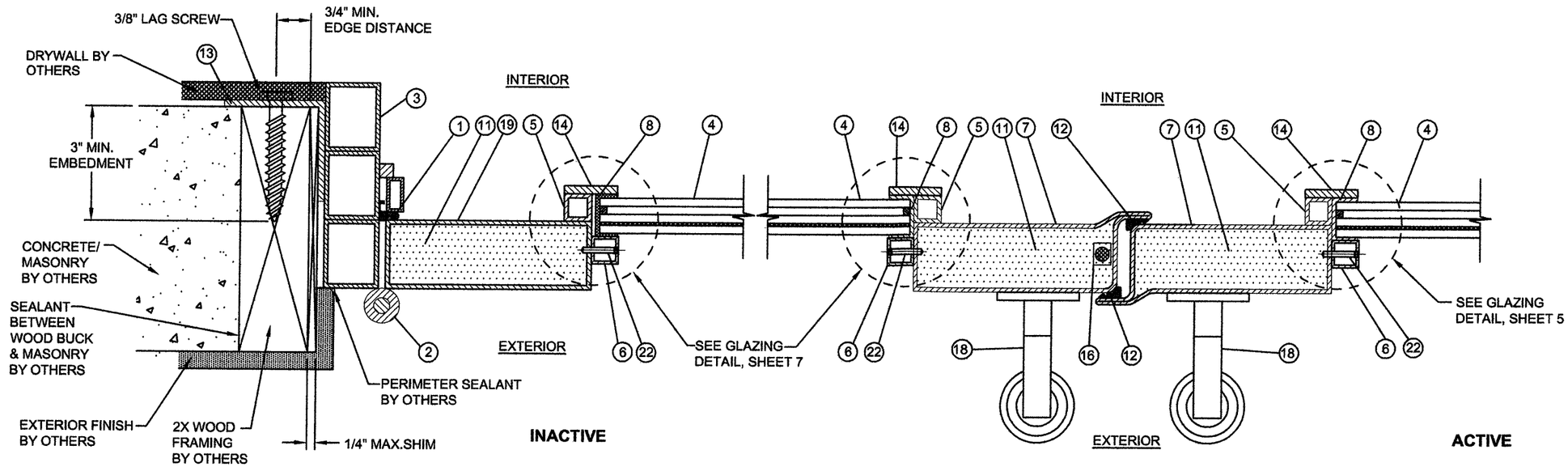

E/5 HORIZONTAL SECTION

FRAME / JAMB
CONCRETE / MASONRY SUBSTRATE

G/5 HORIZONTAL SECTION

ASTRAGAL

PRODUCT REVISED
as complying with the Florida
Building Code
Acceptance No 12-1017.04
Expiration Date 6/12/14
By
Miami Dade Product Control

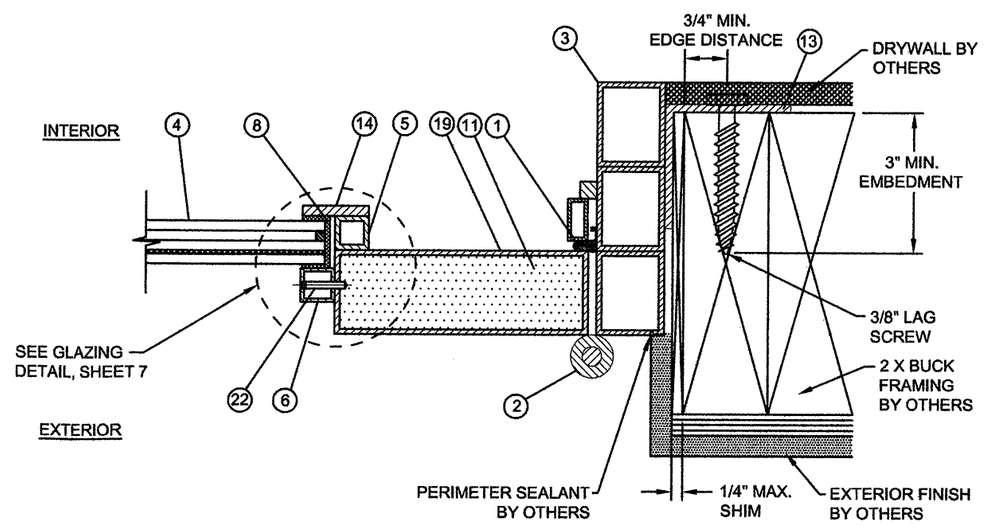

F/5 HORIZONTAL SECTION

FRAME / JAMB
WOOD SUBSTRATE

REVISIONS:

REV	DESCRIPTION	DATE	BY
D	UPDATED TO 2010 FBC	8/3/12	TJH
C	REVISED ADDRESS	5/11/11	RJA
B	ADDED TO TABLE OF CONTENTS	7/25/08	SMC

MAJESTIC ENTRIES, LLC
5850 PEACHTREE INDUSTRIAL BLVD., NORCROSS, GA 30071
TITLE: GLAZED STEEL ENTRY ARCH TOP DOUBLE DOOR
HORIZONTAL SECTIONS

DRN:	DATE:	SCALE:	DWG. NO:	REV:	SHEET:
JKJ	05/11/11	N.T.S.	MAJ0003	D	5 OF 7

PREPARED BY:
PTC, LLC
Phone 321.690.1788 Fax 321.690.1788

ROBERT J. AMORUSO, P.E.
FLORIDA P.E. NO. 49752

ROBERT JAMES AMORUSO
LICENSE
No 49752
10/12/12
STATE OF
FLORIDA
PROFESSIONAL ENGINEER

PTC PRODUCT DESIGN GROUP, LLC
P.O. Box 520775
Longwood, FL 32752-0775
FBPE CERT. OF AUTH. NO. 25935

1

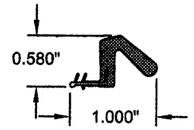

WEATHER STRIPPING
(FRAME)

2

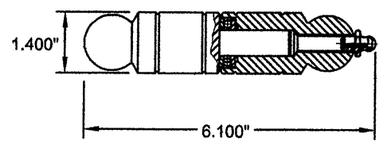

DOOR HINGE

7

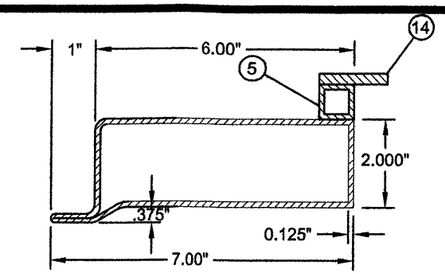

PANEL STILE

9

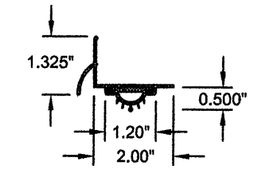

DOOR SWEEP

10

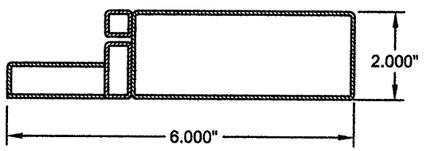

THRESHOLD
COMPONENTS SPOT WELDED TOGETHER

12

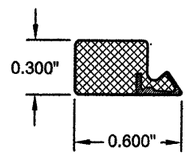

WEATHER STRIPPING
(ASTRAGAL)

13

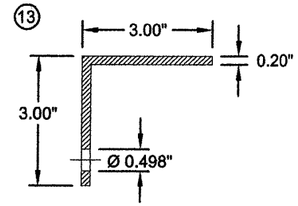

MOUNTING TAB
(WELDED TO FRAME)

16

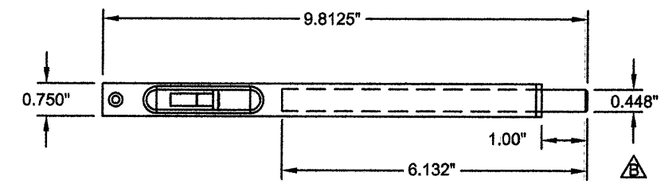

S.S. THROW BOLT

15

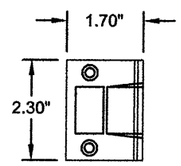

ROLLER CATCH STRIKE PLATE

17

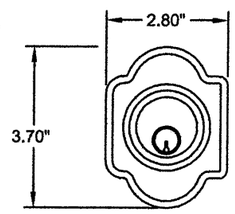

DEAD BOLT KEYED LOCK

3

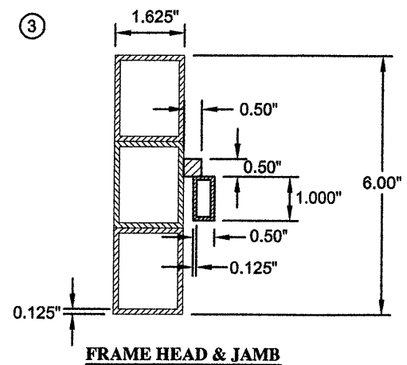

FRAME HEAD & JAMB
COMPONENTS SPOT WELDED TOGETHER

19

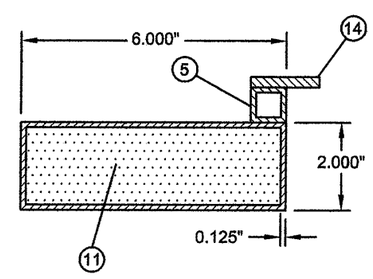

TOP RAIL

6

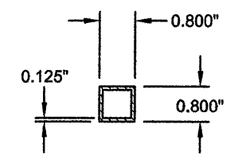

EXTERIOR GLASS STOP

14

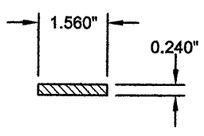

INTERIOR GLASS STOP

5

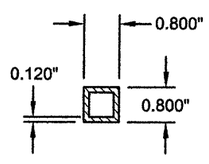

OFFSET SPACER

18

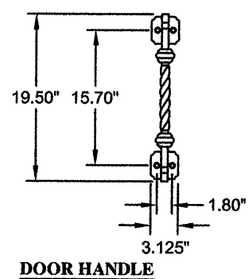

DOOR HANDLE

22

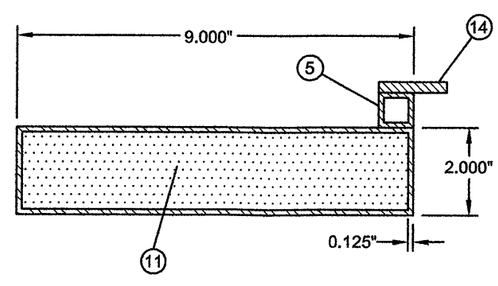

PANEL BOTTOM RAIL

20

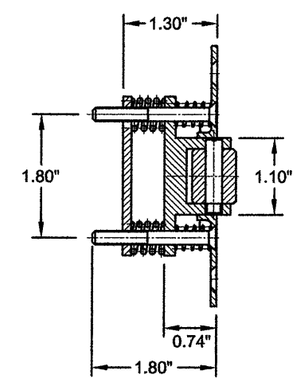

ROLLER CATCH

PRODUCT REVIEWED
as complying with the Florida
Building Code
Acceptance No 12-1017.04
Expiration Date 01/14/14
By Greg L. Crane
Miami Dade Product Control

REVISIONS:

REV	DESCRIPTION	DATE	BY
D	UPDATED TO 2010 FBC	8/3/12	TJH
C	REVISED ADDRESS	5/11/11	RJA
B	REVISED FLUSH BOLT	7/25/08	SMC

MAJESTIC ENTRIES, LLC
5850 PEACHTREE INDUSTRIAL BLVD., NORCROSS, GA 30071
TITLE: GLAZED STEEL ENTRY ARCH TOP DOUBLE DOOR COMPONENTS

DRN:	DATE:	SHEET:
JKJ	05/11/11	6 OF 7
SCALE: N.T.S.	DWG. NO: MAJ0003	
REV: D		

PREPARED BY:
PTC, LLC
Phone 321.690.1788 Fax 321.690.1789

ROBERT J. AMORUSO, P.E.
FLORIDA P.E. NO. 49752

ROBERT JAMES AMORUSO
LICENSE
No 49752
10/12/12
STATE OF
FLORIDA
PROFESSIONAL ENGINEER

PTC PRODUCT DESIGN
GROUP, LLC
P.O. Box 520775
Longwood, FL 32752-0775
FBPE CERT. OF AUTH. NO. 25935

BILL OF MATERIALS

ITEM #	PART #	DESCRIPTION	MATERIAL	MANUFACTURER	QUANTITY	NOTES
1	RM11-001	WEATHER STRIPPING (FRAME)	POLYETHYLENE / FOAM	SCHLEGEL SYSTEMS, INC.	1	
2	RM8-M & F	DOOR BARREL HINGES	STEEL	LOYAL IRON DOORS	6	MALE BARREL HINGE WELDED TO FRAME JAMB; FEMALE BARREL HINGE WELDED TO HINGE STILE. Q235 LOW CARBON STEEL (ASTM A287)
3	RM1-FH & FJ	FRAME HEAD & JAMB	STEEL	LOYAL IRON DOORS	1	Q235 LOW CARBON STEEL (ASTM A287)
4	RM12	1" O.A. INSULATED LAMINATED GLASS	GLASS	OLD CASTLE	2	
5	-----	OFFSET SPACER .80" X .80" X .120"	STEEL	LOYAL IRON DOORS	2	WELDED TO FRAME WITH 1/8" X 1 3/4" SQUARE BUTTED WELDS EVERY 12"; Q235 LOW CARBON STEEL (ASTM A287)
6	RM4-010	EXTERIOR GLASS STOP	STEEL	LOYAL IRON DOORS	2	Q235 LOW CARBON STEEL (ASTM A287)
7	RM2-T	PANEL STILE 2" X 6" X 1/8"	STEEL	LOYAL IRON DOORS	2	Q235 LOW CARBON STEEL (ASTM A287)
8	-----	SILICONE CAULK BEDDING	SILICONE	DOW CORNING 995	-----	GLAZING COMPOUND
9	RM11-004	DOOR SWEEP	AL. & RUBBER	YONGTAI ELEC. METAL	2	
10	RM1-DT	THRESHOLD	STEEL	LOYAL IRON DOORS	1	WELDED TO FRAME JAMBS WITH 1/8" FILLET WELDS ALL AROUND; Q235 LOW CARBON STEEL (ASTM A287)
11	RM13-001	PANEL INSULATION	POLYSTYRENE	APACHE	AS REQ'D	PER CURRENT NOA
12	RM11-006	WEATHER STRIPPING (ASTRAGAL)	FOAM	SCHLEGEL	2	
13	RM1-004	MOUNTING TAB	STEEL	LOYAL IRON DOORS	8	Q235 LOW CARBON STEEL (ASTM A287)
14	RM4-010	INTERIOR GLASS STOP	STEEL	LOYAL IRON DOORS	AS REQ'D	WELDED TO OFFSET SPACER WITH 1/8" X 1 3/4" FILLET WELDS EVERY 12"; Q235 LOW CARBON STEEL (ASTM A287)
15	RM6-2	ROLLER CATCH STRIKE PLATE	BRASS	LOYAL IRON DOORS	2	
16	RM9-004	THROW BOLT	ST. STEEL	LOYAL IRON DOORS	2	300 SERIES
17	RM5-008	DEAD BOLT	STEEL	WESLOCK	1	SERIES 700
18	RM10	DOOR HANDLE	STEEL	LOYAL IRON DOORS	4	
19	-----	TOP RAIL 2" X 6" X 1/8"	STEEL	-----	AS REQ'D	Q235 LOW CARBON STEEL (ASTM A287)
20	RM6-1	ROLLER CATCH	STEEL	LOYAL IRON DOORS	2	
21	-----	PANEL BOTTOM RAIL 2" X 9" X 1/8"	STEEL	LOYAL IRON DOORS	-----	Q235 LOW CARBON STEEL (ASTM A287)
22	-----	#10 X 2" NEO HEX WASHER HEAD SELF TAPPING	STEEL	-----	-----	GLAZING BEAD TO STILE

NOTE:

1. MAIN FRAME CIRCLE HEAD AND JAMB SECTIONS WERE BUTTED AND ARC WELDED WITH 1/8" SQUARE WELDS ALL AROUND AND THEN GROUND SMOOTH.

2. SEGMENTED PORTIONS OF THE FRAME HEAD AND JAMBS WERE SPOT WELDED AROUND EXTERIOR PERIMETER WITH 1/8" X 1 3/4" SQUARE BUTTED WELDS AT 12" O.C.

3. THE SILL / THRESHOLD WAS BUTTED TO JAMBS, ARC WELDED WITH 1/8" FILLET WELDS ALL AROUND AND THEN GROUND SMOOTH.

4. DOOR STOP MEMBERS WERE WELDED TO THE FRAME MAJOR COMPONENTS USING 1/8" X 1 3/4" FILLET WELDS EVERY 12".

5. PANEL STILES TO RAILS WERE MITERED AND ARC WELDED WITH 1/8" SQUARE BUTTED WELDS AND THEN GROUND SMOOTH.

6. ER70S-6 WELDING WIRE FEED WAS USED FOR ALL WELDS.

7. ASTM A287: Fy MIN= 29.7 KSI, Fy MIN= 55KSI.

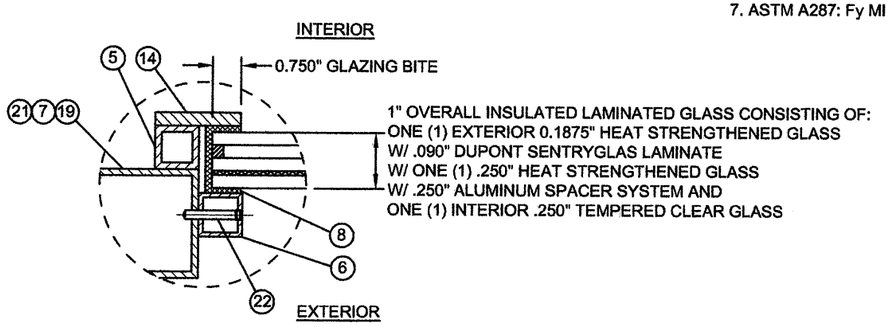

GLAZING DETAIL

PRODUCT REVIEWED
as complying with the Florida
Building Code
Acceptance No 12-1017.04
Expiration Date JAN 14, 2014
By Shaq J. Chanda
Miami Dade Product Control

REVISIONS:

REV	DESCRIPTION	DATE	BY
D	UPDATED TO 2010 FBC	8/3/12	TJH
C	REVISED ADDRESS	5/11/11	RJA
B	REVISED STEEL DESCRIPTION	7/25/08	SMC

MAJESTIC ENTRIES, LLC
5850 PEACHTREE INDUSTRIAL BLVD., NORCROSS, GA 30071
TITLE: GLAZED STEEL ENTRY ARCH TOP DOUBLE DOOR
BILL OF MATERIALS AND GLAZING DETAIL

DRN:	DATE:	SCALE:	DWG. NO:	REV:	SHEET:
JKJ	05/11/11	N.T.S.	MAJ0003	D	7 OF 7

PREPARED BY:
PTC, LLC
Phone 321.690.1788 Fax 321.690.1789

ROBERT J. AMORUSO, P.E.
FLORIDA P.E. NO. 49752

ROBERT JAMES AMORUSO
LICENSE
No 49752
STATE OF
FLORIDA
PROFESSIONAL ENGINEER
10/12/12

PTC PRODUCT DESIGN
GROUP, LLC
P.O. Box 520775
Longwood, FL 32752-0775
FBPE CERT. OF AUTH. NO. 25935