MIAMI-DADE COUNTY
DEPARTMENT OF REGULATORY AND ECONOMIC RESOURCES (RER)
BOARD AND CODE ADMINISTRATION DIVISION

MIAMI-DADE COUNTY
PRODUCT CONTROL SECTION
11805 SW 26 Street, Room 208
T (786) 315-2590 F (786) 315-2599
www.miamidade.gov/economy

NOTICE OF ACCEPTANCE (NOA)

OGT Window Systems, Inc.
6960 N.W. 42nd St.
Miami, FL 33166

SCOPE:

This NOA is being issued under the applicable rules and regulations governing the use of construction materials. The documentation submitted has been reviewed and accepted by Miami-Dade County RER - Product Control Section to be used in Miami Dade County and other areas where allowed by the Authority Having Jurisdiction (AHJ).

This NOA shall not be valid after the expiration date stated below. The Miami-Dade County Product Control Section (In Miami Dade County) and/or the AHJ (in areas other than Miami Dade County) reserve the right to have this product or material tested for quality assurance purposes. If this product or material fails to perform in the accepted manner, the manufacturer will incur the expense of such testing and the AHJ may immediately revoke, modify, or suspend the use of such product or material within their jurisdiction. RER reserves the right to revoke this acceptance, if it is determined by Miami-Dade County Product Control Section that this product or material fails to meet the requirements of the applicable building code.

This product is approved as described herein, and has been designed to comply with the Florida Building Code, including the High Velocity Hurricane Zone.

DESCRIPTION: Series "OGT-1000 Structurally Glazed" Aluminum Storefront/Window Wall System – L.M.I.

APPROVAL DOCUMENT: Drawing No. **W97-42**, titled "OGT-1000 Aluminum Window Wall Sys. (L.M.I.)", sheets 1 through 11 of 11, dated 12/12/97, with revision E dated 10/11/12, prepared by Al-Farooq Corporation, signed and sealed by Javad Ahmad, P.E., bearing the Miami-Dade County Product Control Revision stamp with the Notice of Acceptance number and expiration date by the Miami-Dade County Product Control Section.

MISSILE IMPACT RATING: Large and Small Missile Impact Resistant

LABELING: Each unit shall bear a permanent label with the manufacturer's name or logo, city, state, model/series, and following statement: "Miami-Dade County Product Control Approved", unless otherwise noted herein.

RENEWAL of this NOA shall be considered after a renewal application has been filed and there has been no change in the applicable building code negatively affecting the performance of this product.

TERMINATION of this NOA will occur after the expiration date or if there has been a revision or change in the materials, use, and/or manufacture of the product or process. Misuse of this NOA as an endorsement of any product, for sales, advertising or any other purposes shall automatically terminate this NOA. Failure to comply with any section of this NOA shall be cause for termination and removal of NOA.

ADVERTISEMENT: The NOA number preceded by the words Miami-Dade County, Florida, and followed by the expiration date may be displayed in advertising literature. If any portion of the NOA is displayed, then it shall be done in its entirety.

INSPECTION: A copy of this entire NOA shall be provided to the user by the manufacturer or its distributors and shall be available for inspection at the job site at the request of the Building Official.

This NOA **revises NOA# 12-0612.28** and consists of this page 1 and evidence pages E-1, E-2 and E-3, as well as approval document mentioned above.

The submitted documentation was reviewed by **Manuel Perez, P.E.**

MIAMI-DADE COUNTY APPROVED

12/27/12

OGT Window Systems, Inc.

NOTICE OF ACCEPTANCE: EVIDENCE SUBMITTED

A. DRAWINGS

1. Manufacturer's die drawings and sections.
2. Drawing No **W97-42**, Sheets 1 through 11 of 11, titled "OGT-1000 Aluminum Window Wall Sys. (L.M.I.)", dated 12/12/97, with revision E dated 10/11/12, prepared by Al-Farooq Corporation, signed and sealed by Javad Ahmad, P.E.

B. TESTS

1. Test reports on: 1) Air Infiltration Test, per FBC, TAS 202-94
   2) Uniform Static Air Pressure Test, Loading per FBC, TAS 202-94
   3) Water Resistance Test, per FBC, TAS 202-94
   along with marked-up drawings and installation diagram of an aluminum window wall system, prepared by Hurricane Engineering & Testing, Inc., Test Report No. **HETI-11-3238,** dated 05/09/11, signed and sealed by Rafael E. Droz-Seda, P.E. ***(Submitted under previous NOA#12-0612.28***
2. Test reports on: 1) Large Missile Impact Test per FBC, TAS 201-94
   2) Cyclic Wind Pressure Loading per FBC, TAS 203-94
   along with marked-up drawings and installation diagram of an aluminum window wall system, prepared by Hurricane Engineering & Testing, Inc., Test Report No. **HETI-11-3239**, dated 05/09/11, signed and sealed by Rafael E. Droz-Seda, P.E. ***(Submitted under previous NOA#12-0612.28***
3. Test reports on: 1) Large Missile Impact Test per FBC, TAS 201-94
   2) Cyclic Wind Pressure Loading per FBC, TAS 203-94
   along with marked-up drawings and installation diagram of an aluminum window wall system, prepared by Hurricane Engineering & Testing, Inc., Test Report No. **HETI-04-1902**, dated 05/10/04 and revised on June 18, 2004, signed and sealed by Rafael E. Droz-Seda, P.E. ***(Submitted under previous NOA#07-1002.02)***
4. Test reports on: 1) Large Missile Impact Test per FBC, TAS 201-94
   2) Cyclic Wind Pressure Loading per FBC, TAS 203-94
   along with marked-up drawings and installation diagram of a full arch aluminum window wall system, prepared by Hurricane Engineering & Testing, Inc., Test Report No. **HETI-04-1900**, dated 05/04/04, signed and sealed by Rafael E. Droz-Seda, P.E. ***(Submitted under previous NOA#07-1002.02)***
5. Test reports on: 1) Air Infiltration Test, per FBC, TAS 202-94
   2) Uniform Static Air Pressure Test, Loading per FBC, TAS 202-94
   3) Water Resistance Test, per FBC, TAS 202-94
   along with marked-up drawings and installation diagram of an aluminum window wall system, prepared by Hurricane Engineering & Testing, Inc., Test Report No. **HETI-04-1381,** dated 05/10/04 and revised on June 18, 2004, signed and sealed by Rafael E. Droz-Seda, P.E. ***(Submitted under previous NOA#07-1002.02)***

Manuel Perez, P.E.
Product Control Examiner
NOA No. 12-1019.21
Expiration Date: January 13, 2016
Approval Date: December 27, 2012

B. TESTS (CONTINUED)

6. Test reports on: 1) Air Infiltration Test, per FBC, TAS 202-94
2) Uniform Static Air Pressure Test, Loading per FBC, TAS 202-94
3) Water Resistance Test, per FBC, TAS 202-94
along with marked-up drawings and installation diagram of a full arch aluminum window wall system, prepared by Hurricane Engineering & Testing, Inc., Test Report No. **HETI-04-1380**, dated 05/04/04, signed and sealed by Rafael E. Droz-Seda, P.E. ***(Submitted under previous NOA#07-1002.02)***

7. Tensile Test report prepared by Hurricane Engineering & Testing, Inc., Test Report No. **HETI-04-T210**, dated 05/28/04, tested per **ASTM E8-01e1**, signed and sealed by Rafael E. Droz-Seda, P.E. ***(Submitted under previous NOA#07-1002.02)***

8. Tensile Test report prepared by Hurricane Engineering & Testing, Inc., Test Report No. **HETI-04-T211**, dated 05/28/04, tested per **ASTM E8-01e1**, signed and sealed by Rafael E. Droz-Seda, P.E. ***(Submitted under previous NOA#07-1002.02)***

9. Tensile Test report prepared by Hurricane Engineering & Testing, Inc., Test Report No. **HETI-04-T216**, dated 06/02/04, tested per **ASTM E8-01e1**, signed and sealed by Rafael E. Droz-Seda, P.E. ***(Submitted under previous NOA#07-1002.02)***

10. Tensile Test report prepared by Hurricane Engineering & Testing, Inc., Test Report No. **HETI-98-T80**, dated 03/19/98, tested per **ASTM E8-93**, signed and sealed by Hector M. Medina, P.E. ***(Submitted under previous NOA#98-0331.05)***

11. Test reports on: 1) Air Infiltration Test, per PA 202-94
2) Uniform Static Air Pressure Test, Loading per PA 202-94
3) Water Resistance Test, per PA 202-94
along with marked-up drawings and installation diagram of an aluminum storefront/curtain wall system, prepared by Hurricane Engineering & Testing, Inc., Test Report No. **HETI-97-1115**, dated 08/08/97, signed and sealed by Hector M. Medina, P.E. ***(Submitted under previous NOA#98-0331.05)***

12. Test reports on: 1) Large Missile Impact Test per SFBC, PA 201-94
2) Cyclic Wind Pressure Loading per SFBC, PA 203-94
along with marked-up drawings and installation diagram of an aluminum storefront/curtain wall system, prepared by Hurricane Engineering & Testing, Inc., Test Report No. **HETI-97-670**, dated 09/30/97, signed and sealed by Hector M. Medina, P.E. ***(Submitted under previous NOA#98-0331.05)***

13. Test reports on: 1) Small Missile Impact Test per SFBC, PA 201-94
2) Cyclic Wind Pressure Loading per SFBC, PA 203-94
along with marked-up drawings and installation diagram of an aluminum storefront/curtain wall system, prepared by Hurricane Engineering & Testing, Inc., Test Report No. **HETI-97-662**, dated 09/11/97, and revised 08/19/98, signed and sealed by Hector M. Medina, P.E.
(Submitted under previous NOA#98-0331.05)

Manuel Perez, P.E.
Product Control Examiner
NOA No. 12-1019.21
Expiration Date: January 13, 2016
Approval Date: December 27, 2012

NOTICE OF ACCEPTANCE: EVIDENCE SUBMITTED

B. TESTS (CONTINUED)

14. Test reports on: 1) Large Missile Impact Test per SFBC, PA 201-94 along with marked-up drawings and installation diagram of an aluminum mullion system, prepared by Hurricane Engineering & Testing, Inc., Test Report No. **HETI-97-669**, dated 09/29/97, signed and sealed by Hector M. Medina, P.E. ***(Submitted under previous NOA#98-0331.05)***

C. CALCULATIONS

1. Anchor verification calculations and structural analysis, complying with FBC-2010, prepared by Al-Farooq Corporation, dated 05/17/12 and 12/20/12, signed and sealed by Javad Ahmad, P.E.
(Submitted under previous NOA#12-0612.28

2. Glazing complies with ASTM E1300-04

D. QUALITY ASSURANCE

1. Miami-Dade Department of Regulatory and Economic Resources (RER)

E. MATERIAL CERTIFICATIONS

1. Notice of Acceptance No. **11–0624.02** issued to **E.I. DuPont DeNemours & Co.**, Inc. for their "**DuPont SentryGlas® Interlayer**" dated 08/25/11, expiring on 01/14/17.

2. Notice of Acceptance No. **08–1224.04** issued to **Solutia, Inc.** for their "**Saflex Composites Glass Interlayer with PET Core**" dated 02/25/09, expiring on 12/11/13.

3. Notice of Acceptance No. **08–0206.01** issued to **Solutia, Inc.** for their "**Saflex HP Glass Interlayer**" dated 04/17/08, expiring on 04/14/13.

F. STATEMENTS

1. Statement letter of conformance, complying with FBC-2010, and of no financial interest, dated December 21, 2012, signed and sealed by Javad Ahmad, P.E.

G. OTHER

1. Notice of Acceptance No. **12-0612.28**, issued to OGT Window Systems, Inc. for their Series "OGT-1000 Structurally Glazed" Aluminum Storefront/Window Wall System – L.M.I., approved on 09/13/12 and expiring on 01/13/16.

2. Notice of Acceptance No. **10-0311.01**, issued to OGT Window Systems, Inc. for their Series "OGT-1000 Structurally Glazed" Aluminum Storefront/Window Wall System – L.M.I., approved on 01/13/11 and expiring on 01/13/16.

Manuel Perez, P.E.
Product Control Examiner
NOA No. 12-1019.21
Expiration Date: January 13, 2016
Approval Date: December 27, 2012

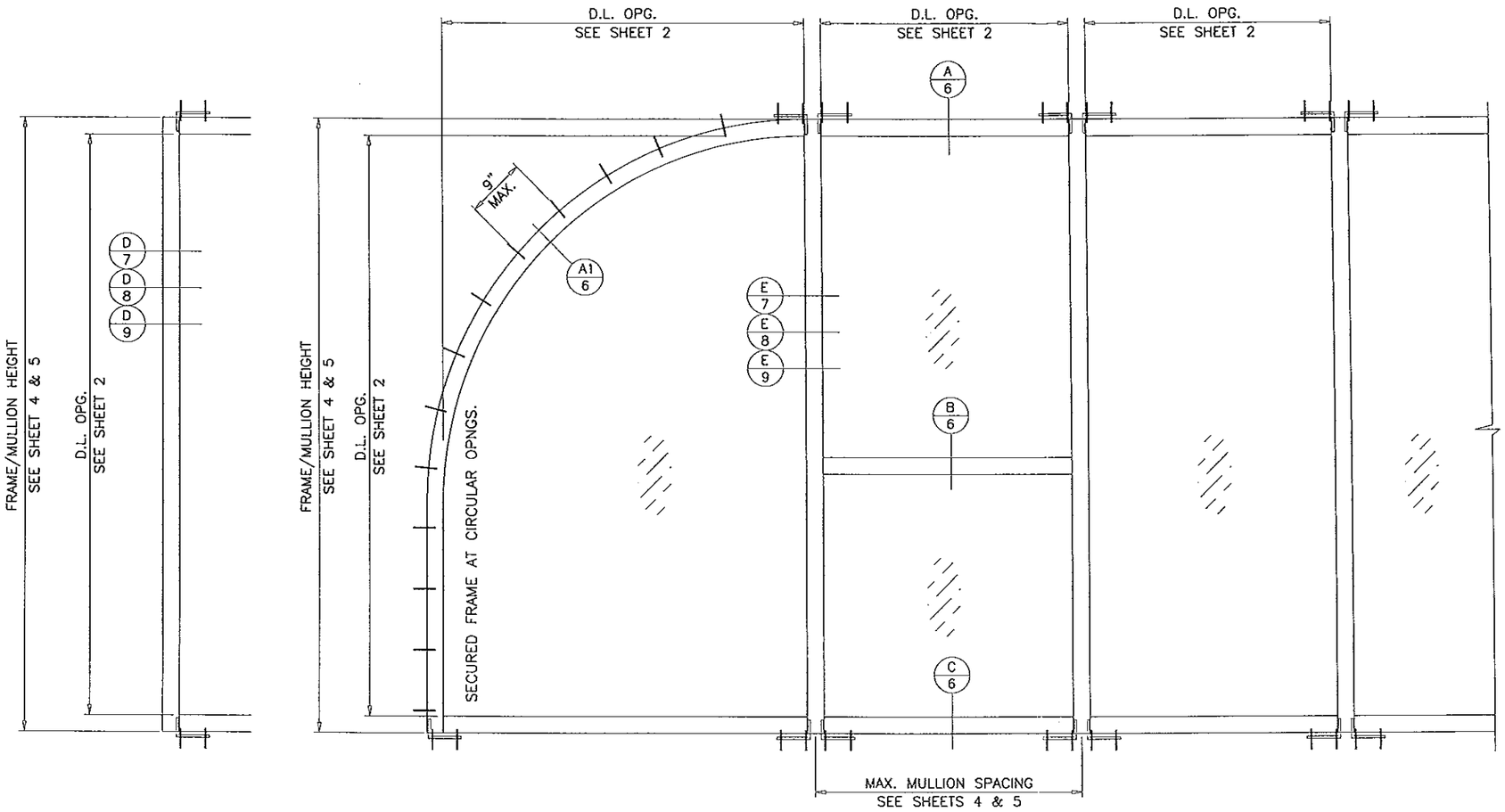

TYPICAL ELEVATION

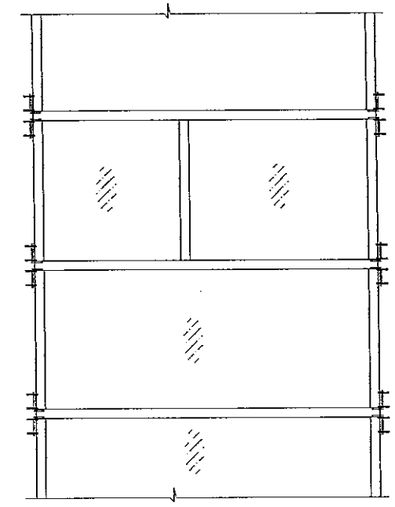

INSTALLATIONS CAN BE ORIENTED VERTICALLY OR HORIZONTALLY AS SHOWN ABOVE.

OGT-1000 WINDOW WALL SYSTEM

THIS STRUCTURALLY GLAZED SYSTEM IS RATED FOR LARGE & SMALL MISSILE IMPACT SHUTTERS ARE NOT REQUIRED.

CODE REQUIREMENTS FOR SAFEGUARDS MUST BE OBSERVED.

THIS PRODUCT HAS BEEN DESIGNED AND TESTED TO COMPLY WITH THE REQUIREMENTS OF THE FLORIDA BUILDING CODE INCLUDING HIGH VELOCITY HURRICANE ZONE (HVHZ).

WOOD BUCKS BY OTHERS, MUST BE ANCHORED PROPERLY TO TRANSFER LOADS TO THE STRUCTURE.

ANCHORS SHALL BE AS LISTED, SPACED AS SHOWN ON DETAILS, ANCHORS EMBEDMENT TO BASE MATERIAL SHALL BE BEYOND WALL DRESSING OR STUCCO.

ANCHORING OR LOADING CONDITIONS NOT SHOWN IN THESE DETAILS ARE NOT PART OF THIS APPROVAL.

A LOAD DURATION INCREASE IS USED IN DESIGN OF ANCHORS INTO WOOD ONLY.

MATERIALS INCLUDING BUT NOT LIMITED TO STEEL/METAL SCREWS, THAT COME INTO CONTACT WITH OTHER DISSIMILAR MATERIALS SHALL MEET THE REQUIREMENTS OF THE FLORIDA BLDG. CODE SECTION 2003.8.4.

INSTRUCTIONS:

USE CHARTS AS FOLLOWS.

STEP 1 DETERMINE DESIGN WIND LOAD REQUIREMENT BASED ON WIND VELOCITY, BLDG. HEIGHT, WIND ZONE USING APPLICABLE ASCE 7 STANDARD.

STEP 2 SEE CHARTS ON SHEET 2 FOR DESIGN LOAD CAPACITY OF DESIRED GLASS SIZE.

STEP 3 CHECK MULLION CAPACITY FOR A GIVEN SPACING AND HEIGHT USING CHARTS ON SHEETS 4 AND 5 THE CAPACITY SHOULD EXCEED THE DESIGN LOAD.

STEP 4 THE LOWEST VALUE RESULTING FROM STEPS 2 AND 3 SHALL APPLY TO ENTIRE SYSTEM. THIS VALUE SHOULD MEET OR EXCEED THE DESIGN WIND LOAD REQUIREMENT OBTAINED IN STEP 1 ABOVE.

Engr: JAVAD AHMAD
CIVIL
FLA. PE # 70592
C.A.N. 3538

OCT 12 2012

PRODUCT REVISED
as complying with the Florida
Building Code
Acceptance No 12-1019.21
Expiration Date Jan 13 2016
By Manuel Perez
Miami Dade Product Control

AL-FAROOQ CORPORATION
ENGINEERS & PRODUCT DEVELOPMENT
1235 S.W. 87 AVE
MIAMI, FLORIDA 33174
TEL. (305) 264-8100 FAX. (305) 262-6978
STORE\97-42

OGT-1000 ALUMINUM WINDOW WALL SYS. (L.M.I.)

OGT WINDOW SYSTEMS
6910 N.W. 42 STREET
MIAMI, FL. 33166
TEL. (305) 594-3999 FAX. (305) 392-9555

revisions:

no	date	by	description
A	8.22.98		GENERAL REVISION
B	11.04.09		GENERAL REVISION
C	12.10.10		REV. PER BCCO COMMENTS
D	06.04.12		GENERAL REVISION
E	10.11.12		NO CHANGE THIS SHEET

date: 12-12-97
scale: 1/2"=1'-0"
dr. by: HAMID
chk. by:

drawing no.
97-42

GLASS LOAD CAPACITY – PSF

NOMINAL DIMS.		GLASS TYPES 'C'		'D'		'E'		'F'	
D.L.O. WIDTH	D.L.O. HEIGHT	EXT.(+)	INT.(–)	EXT.(+)	INT.(–)	EXT.(+)	INT.(–)	EXT.(+)	INT.(–)
36"	60"	105.0	105.0	105.0	105.0	78.0	83.0	105.0	105.0
39"		100.5	100.5	100.5	100.5	78.0	83.0	105.0	105.0
42"		93.8	93.8	93.8	93.8	78.0	83.0	105.0	105.0
45"		88.0	88.0	88.0	88.0	78.0	83.0	105.0	105.0
48"		82.8	82.8	82.8	82.8	78.0	82.8	105.0	105.0
51"		78.2	78.2	78.2	78.2	78.0	78.2	105.0	105.0
54"		74.1	74.1	74.1	74.1	74.1	74.1	105.0	105.0
57"		70.4	70.4	70.4	70.4	70.4	70.4	104.6	104.6
60"		67.0	67.0	67.0	67.0	67.0	67.0	99.7	99.7
63"		64.0	64.0	64.0	64.0	64.0	67.0	99.7	99.7
66"		61.2	61.2	61.2	61.2	61.2	67.0	99.7	99.7
69"		58.6	58.6	58.6	58.6	58.6	67.0	99.7	99.7
36"	66"	105.0	105.0	105.0	105.0	78.0	83.0	105.0	105.0
39"		100.5	100.5	100.5	100.5	78.0	83.0	105.0	105.0
42"		93.8	93.8	93.8	93.8	78.0	83.0	105.0	105.0
45"		88.0	88.0	88.0	88.0	78.0	83.0	105.0	105.0
48"		82.8	82.8	82.8	82.8	78.0	82.8	105.0	105.0
51"		78.2	78.2	78.2	78.2	78.0	78.2	105.0	105.0
54"		74.1	74.1	74.1	74.1	74.1	74.1	105.0	105.0
57"		70.4	70.4	70.4	70.4	70.4	70.4	104.6	104.6
60"		67.0	67.0	67.0	67.0	67.0	67.0	99.7	99.7
63"		64.0	64.0	64.0	64.0	64.0	64.0	95.1	95.1
66"		61.2	61.2	61.2	61.2	61.2	61.2	91.0	91.0
69"		–	–	58.6	58.6	58.6	61.2	87.2	87.2
36"	72"	105.0	105.0	105.0	105.0	78.0	83.0	105.0	105.0
39"		100.5	100.5	100.5	100.5	78.0	83.0	105.0	105.0
42"		93.8	93.8	93.8	93.8	78.0	83.0	105.0	105.0
45"		88.0	88.0	88.0	88.0	78.0	83.0	105.0	105.0
48"		82.8	82.8	82.8	82.8	78.0	82.8	105.0	105.0
51"		78.2	78.2	78.2	78.2	78.0	78.2	105.0	105.0
54"		74.1	74.1	74.1	74.1	74.1	74.1	105.0	105.0
57"		70.4	70.4	70.4	70.4	70.4	70.4	104.6	104.6
60"		67.0	67.0	67.0	67.0	67.0	67.0	99.7	99.7
63"		–	–	64.0	64.0	64.0	64.0	95.1	95.1
66"		–	–	61.2	61.2	61.2	61.2	91.0	91.0
69"		–	–	58.6	58.6	58.6	58.6	58.6	58.6
36"	78"	105.0	105.0	105.0	105.0	78.0	83.0	105.0	105.0
39"		100.5	100.5	100.5	100.5	78.0	83.0	105.0	105.0
42"		93.8	93.8	93.8	93.8	78.0	83.0	105.0	105.0
45"		88.0	88.0	88.0	88.0	78.0	83.0	105.0	105.0
48"		82.8	82.8	82.8	82.8	78.0	82.8	105.0	105.0
51"		78.2	78.2	78.2	78.2	78.0	78.2	105.0	105.0
54"		74.1	74.1	74.1	74.1	74.1	74.1	105.0	105.0
57"		70.4	70.4	70.4	70.4	70.4	70.4	104.6	104.6
60"		–	–	67.0	67.0	67.0	67.0	99.7	99.7
63"		–	–	64.0	64.0	64.0	64.0	64.0	64.0
66"		–	–	61.2	61.2	61.2	61.2	61.2	61.2
69"		–	–	58.6	58.6	58.6	58.6	58.6	58.6

GLASS LOAD CAPACITY – PSF

NOMINAL DIMS.		GLASS TYPES 'C'		'D'		'E'		'F'	
D.L.O. WIDTH	D.L.O. HEIGHT	EXT.(+)	INT.(–)	EXT.(+)	INT.(–)	EXT.(+)	INT.(–)	EXT.(+)	INT.(–)
36"	84"	105.0	105.0	105.0	105.0	78.0	83.0	105.0	105.0
39"		100.5	100.5	100.5	100.5	78.0	83.0	105.0	105.0
42"		93.8	93.8	93.8	93.8	78.0	83.0	105.0	105.0
45"		88.0	88.0	88.0	88.0	78.0	83.0	105.0	105.0
48"		82.8	82.8	82.8	82.8	78.0	82.8	105.0	105.0
51"		78.2	78.2	78.2	78.2	78.0	78.2	105.0	105.0
54"		–	–	74.1	74.1	74.1	74.1	105.0	105.0
57"		–	–	70.4	70.4	70.4	70.4	70.4	70.4
60"		–	–	67.0	67.0	67.0	67.0	67.0	67.0
63"		–	–	64.0	64.0	64.0	64.0	64.0	64.0
66"		–	–	61.2	61.2	61.2	61.2	61.2	61.2
69"		–	–	58.6	58.6	58.6	58.6	58.6	58.6
36"	90"	105.0	105.0	105.0	105.0	78.0	83.0	105.0	105.0
39"		100.5	100.5	100.5	100.5	78.0	83.0	105.0	105.0
42"		93.8	93.8	93.8	93.8	78.0	83.0	105.0	105.0
45"		88.0	88.0	88.0	88.0	78.0	83.0	105.0	105.0
48"		82.8	82.8	82.8	82.8	78.0	82.8	105.0	105.0
51"		–	–	78.2	78.2	78.0	78.2	105.0	105.0
54"		–	–	74.1	74.1	74.1	74.1	74.1	74.1
57"		–	–	70.4	70.4	70.4	70.4	70.4	70.4
60"		–	–	67.0	67.0	67.0	67.0	67.0	67.0
63"		–	–	64.0	64.0	64.0	64.0	64.0	64.0
66"		–	–	61.2	61.2	61.2	61.2	61.2	61.2
36"	96"	105.0	105.0	105.0	105.0	78.0	83.0	105.0	105.0
39"		100.5	100.5	100.5	100.5	78.0	83.0	105.0	105.0
42"		93.8	93.8	93.8	93.8	78.0	83.0	105.0	105.0
45"		88.0	88.0	88.0	88.0	78.0	83.0	105.0	105.0
48"		–	–	82.8	82.8	78.0	82.8	105.0	105.0
51"		–	–	78.2	78.2	78.0	78.2	78.0	78.2
54"		–	–	74.1	74.1	74.1	74.1	74.1	74.1
57"		–	–	70.4	70.4	70.4	70.4	70.4	70.4
60"		–	–	67.0	67.0	67.0	67.0	67.0	67.0
63"		–	–	64.0	64.0	64.0	64.0	64.0	64.0
36"	102"	105.0	105.0	105.0	105.0	78.0	83.0	105.0	105.0
39"		100.5	100.5	100.5	100.5	78.0	83.0	105.0	105.0
42"		93.8	93.8	93.8	93.8	78.0	83.0	105.0	105.0
45"		–	–	88.0	88.0	78.0	83.0	105.0	105.0
48"		–	–	82.8	82.8	78.0	82.8	78.0	82.8
51"		–	–	78.2	78.2	78.0	78.2	78.0	78.2
54"		–	–	74.1	74.1	74.1	74.1	74.1	74.1
57"		–	–	70.4	70.4	70.4	70.4	70.4	70.4
36"	108"	105.0	105.0	105.0	105.0	78.0	83.0	105.0	105.0
39"		100.5	100.5	100.5	100.5	78.0	83.0	105.0	105.0
42"		–	–	93.8	93.8	78.0	83.0	105.0	105.0
45"		–	–	88.0	88.0	78.0	83.0	78.0	83.0
48"		–	–	82.8	82.8	78.0	82.8	78.0	82.8
51"		–	–	78.2	78.2	78.0	78.2	78.0	78.2
54"		–	–	74.1	74.1	74.1	74.1	74.1	74.1

GLASS LOAD CAPACITY – PSF

NOMINAL DIMS.		GLASS TYPES 'C'		'D'		'E'		'F'	
D.L.O. WIDTH	D.L.O. HEIGHT	EXT.(+)	INT.(–)	EXT.(+)	INT.(–)	EXT.(+)	INT.(–)	EXT.(+)	INT.(–)
36"	114"	105.0	105.0	105.0	105.0	78.0	83.0	105.0	105.0
39"		100.5	100.5	100.5	100.5	78.0	83.0	105.0	105.0
42"		–	–	93.8	93.8	78.0	83.0	78.0	83.0
45"		–	–	88.0	88.0	78.0	83.0	78.0	83.0
48"		–	–	82.8	82.8	78.0	82.8	78.0	82.8
51"		–	–	78.2	78.2	78.0	78.2	78.0	78.2
36"	120"	105.0	105.0	105.0	105.0	78.0	83.0	105.0	105.0
39"		–	–	100.5	100.5	78.0	83.0	105.0	105.0
42"		–	–	93.8	93.8	78.0	83.0	78.0	83.0
45"		–	–	88.0	88.0	78.0	83.0	78.0	83.0
48"		–	–	82.8	82.8	78.0	82.8	78.0	82.8
36"	126"	–	–	105.0	105.0	78.0	83.0	105.0	105.0
39"		–	–	100.5	100.5	78.0	83.0	78.0	83.0
42"		–	–	93.8	93.8	78.0	83.0	78.0	83.0
45"		–	–	88.0	88.0	78.0	83.0	78.0	83.0
48"		–	–	82.8	82.8	78.0	82.8	78.0	82.8
36"	132"	–	–	105.0	105.0	78.0	83.0	105.0	105.0
39"		–	–	100.5	100.5	78.0	83.0	78.0	83.0
42"		–	–	93.8	93.8	78.0	83.0	78.0	83.0
45"		–	–	88.0	88.0	78.0	83.0	78.0	83.0
36"	138"	–	–	105.0	105.0	78.0	83.0	78.0	83.0
39"		–	–	100.5	100.5	78.0	83.0	78.0	83.0
42"		–	–	93.8	93.8	78.0	83.0	78.0	83.0
36"	144"	–	–	105.0	105.0	78.0	83.0	78.0	83.0
39"		–	–	100.5	100.5	78.0	83.0	78.0	83.0
42"		–	–	93.8	93.8	78.0	83.0	78.0	83.0

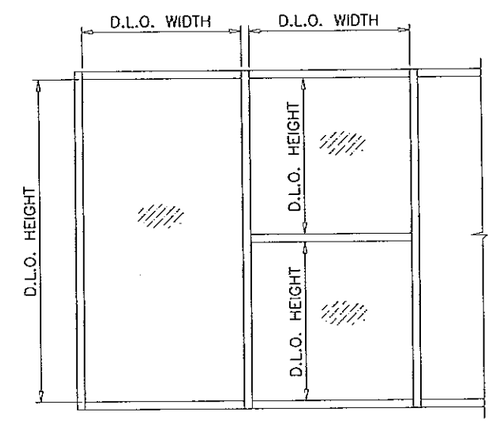

NOTE:
GLASS CAPACITIES ON THIS SHEET ARE BASED ON ASTM E1300-04 (3 SEC. GUSTS).

Engr: JAVAD AHMAD
CIVIL
FLA. PE # 70592
C.A.N. 3538

OCT 12 2012

PRODUCT REVISED
as complying with the Florida Building Code
Acceptance No 12-1019.21
Expiration Date Jan. 13, 2016
By Manuel Sera
Miami Dade Product Control

AL-FAROOQ CORPORATION
ENGINEERS & PRODUCT DEVELOPMENT
1235 S.W. 87 AVE
MIAMI, FLORIDA 33174
TEL. (305) 264-8100 FAX. (305) 262-6978

STORE\97-42

OGT-1000 ALUMINUM WINDOW WALL SYS. (L.M.I.)

OGT WINDOW SYSTEMS
6910 N.W. 42 STREET
MIAMI, FL. 33166
TEL. (305) 594-3999 FAX. (305) 392-9555

revisions:

no	date	by	description
A	9.22.98		GENERAL REVISION
B	11.04.09		GENERAL REVISION
C	12.10.10		REV. PER BCCO COMMENTS
D	06.04.12		GENERAL REVISION
E	10.11.12		GLASS TYPE F CHART REV.

date: 12-12-97
scale: 3/8" = 1"
dr. by: HAMID
chk. by:

drawing no. 97-42

sheet 2 of 11

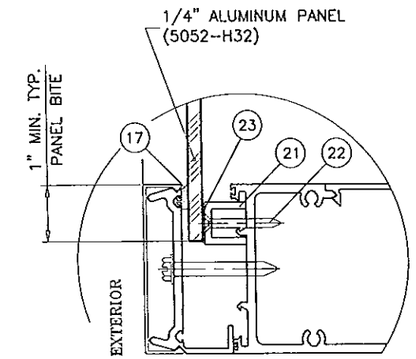

ALUMINUM PANEL OPTION

MAX. PANEL AREA = 15.9 SQ. FT.

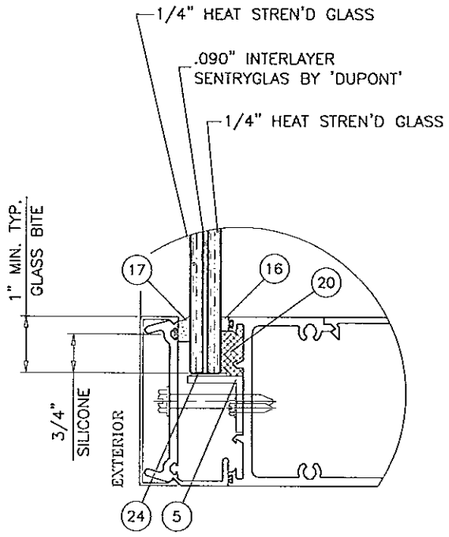

GLASS TYPE 'C'

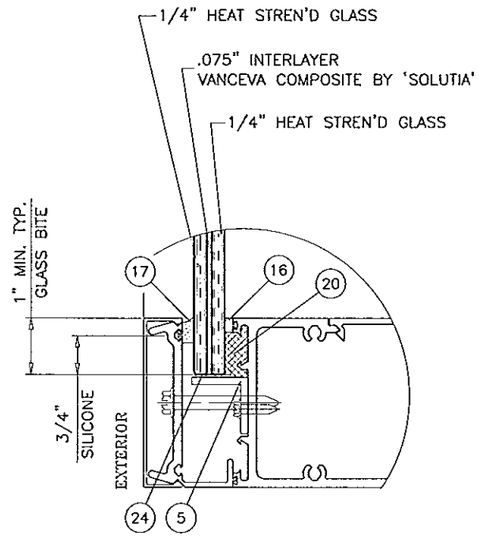

GLASS TYPE 'D'

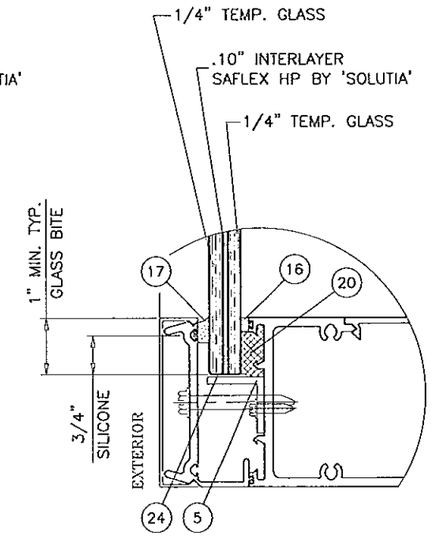

GLASS TYPE 'E'

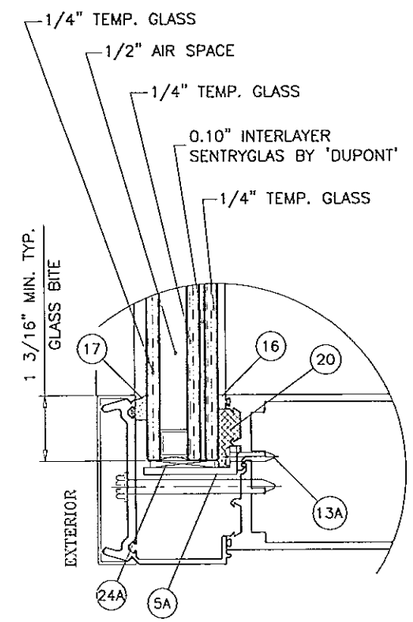

GLASS TYPE 'F'

GLAZING OPTIONS

Engr: JAVAD AHMAD
CIVIL
FLA. PE # 70592
C.A.N. 3538

OCT 23 2012

PRODUCT REVISED
as complying with the Florida
Building Code
Acceptance No 12-1019.21
Expiration Date Jan. 13, 2016
By
Miami Dade Product Control

AL-FAROOQ CORPORATION
ENGINEERS & PRODUCT DEVELOPMENT
1235 S.W. 87 AVE
MIAMI, FLORIDA 33174
TEL. (305) 264-8100 FAX. (305) 262-6978

STORE 97-42

OGT-1000 ALUMINUM WINDOW WALL SYS. (L.M.I.)

OGT WINDOW SYSTEMS
6910 N.W. 42 STREET
MIAMI, FL. 33166
TEL. (305) 594-3999 FAX. (305) 392-9555

revisions:

no	date	by	description
A	8.22.98		GENERAL REVISION
B	11.04.09		GENERAL REVISION
C	12.10.10		REV. PER BOCO COMMENTS
D	06.04.12		GENERAL REVISION
E	10.11.12		NO CHANGE THIS SHEET

date: 12-12-97
scale: 3/8" = 1"
dr. by: HAMID
chk. by:

drawing no.
97-42

sheet 3 of 11

MULLION LOAD CAPACITY – PSF
MULLIONS WITHOUT INTERMEDIATE HORIZONTALS

NOMINAL DIMS.		JAMB 'J1' MULL 'M1'	MULL 'M2'	JAMB 'J2'/'J3' MULL 'M3'
WIDTH (W)	FRAME HEIGHT	EXT. (+) INT. (–)	EXT. (+) INT. (–)	EXT. (+) INT. (–)
36"	66"	105.0	105.0	105.0
39"		105.0	105.0	105.0
42"		105.0	105.0	105.0
45"		105.0	105.0	105.0
48"		105.0	105.0	105.0
51"		105.0	105.0	105.0
54"		105.0	105.0	105.0
57"		105.0	105.0	105.0
60"		105.0	105.0	105.0
63"		105.0	105.0	105.0
66"		105.0	105.0	105.0
69"		105.0	105.0	105.0
72"		105.0	105.0	105.0
75"		105.0	–	–
78"		105.0	–	–
81"		105.0	–	–
84"		105.0	–	–
88"		105.0	–	–
36"	72"	105.0	105.0	105.0
39"		105.0	105.0	105.0
42"		105.0	105.0	105.0
45"		105.0	105.0	105.0
48"		105.0	105.0	105.0
51"		105.0	105.0	105.0
54"		105.0	105.0	105.0
57"		105.0	105.0	105.0
60"		105.0	105.0	105.0
63"		105.0	105.0	105.0
66"		105.0	105.0	105.0
69"		105.0	105.0	105.0
72"		105.0	105.0	105.0
75"		105.0	–	–
78"		105.0	–	–
81"		105.0	–	–
84"		105.0	–	–
88"		105.0	–	–
36"	78"	105.0	105.0	105.0
39"		105.0	105.0	105.0
42"		105.0	105.0	105.0
45"		105.0	105.0	105.0
48"		105.0	105.0	105.0
51"		105.0	105.0	105.0
54"		105.0	105.0	105.0
57"		105.0	105.0	105.0
60"		105.0	105.0	105.0
63"		105.0	105.0	105.0
66"		105.0	105.0	105.0
69"		105.0	105.0	105.0
72"		105.0	105.0	105.0
75"		105.0	–	–
78"		105.0	–	–
81"		105.0	–	–
84"		105.0	–	–
88"		105.0	–	–

MULLION LOAD CAPACITY – PSF
MULLIONS WITHOUT INTERMEDIATE HORIZONTALS

NOMINAL DIMS.		JAMB 'J1' MULL 'M1'	MULL 'M2'	JAMB 'J2'/'J3' MULL 'M3'
WIDTH (W)	FRAME HEIGHT	EXT. (+) INT. (–)	EXT. (+) INT. (–)	EXT. (+) INT. (–)
36"	84"	105.0	105.0	105.0
39"		105.0	105.0	105.0
42"		105.0	105.0	105.0
45"		105.0	105.0	105.0
48"		105.0	105.0	105.0
51"		105.0	105.0	105.0
54"		105.0	105.0	105.0
57"		105.0	105.0	105.0
60"		105.0	105.0	105.0
63"		105.0	105.0	105.0
66"		105.0	105.0	105.0
69"		105.0	105.0	105.0
72"		105.0	105.0	105.0
75"		105.0	–	–
78"		105.0	–	–
81"		105.0	–	–
84"		105.0	–	–
88"		105.0	–	–
36"	90"	105.0	105.0	105.0
39"		105.0	105.0	105.0
42"		105.0	105.0	105.0
45"		105.0	105.0	105.0
48"		105.0	105.0	105.0
51"		105.0	105.0	105.0
54"		105.0	105.0	105.0
57"		105.0	105.0	105.0
60"		105.0	105.0	105.0
63"		105.0	105.0	105.0
66"		105.0	105.0	105.0
69"		105.0	105.0	105.0
72"		105.0	105.0	105.0
75"		105.0	–	–
78"		105.0	–	–
81"		105.0	–	–
84"		105.0	–	–
88"		105.0	–	–
36"	96"	105.0	105.0	105.0
39"		105.0	105.0	105.0
42"		105.0	105.0	105.0
45"		105.0	105.0	105.0
48"		105.0	105.0	105.0
51"		105.0	105.0	105.0
54"		105.0	105.0	105.0
57"		105.0	105.0	105.0
60"		105.0	105.0	105.0
63"		105.0	105.0	105.0
66"		105.0	105.0	105.0
69"		105.0	105.0	105.0
72"		105.0	105.0	105.0
75"		105.0	–	–
78"		105.0	–	–
81"		105.0	–	–
84"		105.0	–	–
88"		105.0	–	–

MULLION LOAD CAPACITY – PSF
MULLIONS WITHOUT INTERMEDIATE HORIZONTALS

NOMINAL DIMS.		JAMB 'J1' MULL 'M1'	MULL 'M2'	JAMB 'J2'/'J3' MULL 'M3'
WIDTH (W)	FRAME HEIGHT	EXT. (+) INT. (–)	EXT. (+) INT. (–)	EXT. (+) INT. (–)
36"	102"	105.0	105.0	105.0
39"		105.0	105.0	105.0
42"		105.0	105.0	105.0
45"		105.0	105.0	105.0
48"		105.0	105.0	105.0
51"		105.0	105.0	105.0
54"		105.0	105.0	105.0
57"		105.0	105.0	105.0
60"		105.0	105.0	105.0
63"		105.0	105.0	105.0
66"		105.0	105.0	105.0
69"		105.0	105.0	105.0
72"		105.0	105.0	105.0
75"		105.0	–	–
78"		105.0	–	–
81"		105.0	–	–
84"		105.0	–	–
88"		105.0	–	–
36"	108"	105.0	105.0	105.0
39"		105.0	105.0	105.0
42"		105.0	105.0	105.0
45"		105.0	105.0	105.0
48"		105.0	105.0	105.0
51"		105.0	105.0	105.0
54"		105.0	105.0	105.0
57"		105.0	105.0	105.0
60"		105.0	105.0	105.0
63"		105.0	105.0	105.0
66"		104.9	105.0	105.0
69"		101.7	105.0	105.0
72"		98.8	105.0	105.0
75"		96.3	–	–
78"		94.1	–	–
81"		92.2	–	–
84"		90.5	–	–
88"		88.6	–	–
36"	114"	105.0	105.0	105.0
39"		105.0	105.0	105.0
42"		105.0	105.0	105.0
45"		105.0	105.0	105.0
48"		105.0	105.0	105.0
51"		105.0	105.0	105.0
54"		103.1	105.0	105.0
57"		98.6	105.0	105.0
60"		94.6	105.0	105.0
63"		91.1	105.0	105.0
66"		87.9	105.0	105.0
69"		85.1	105.0	105.0
72"		82.6	105.0	105.0
75"		80.3	–	–
78"		78.3	–	–
81"		76.5	–	–
84"		75.0	–	–
88"		73.2	–	–

MULLION LOAD CAPACITY – PSF
MULLIONS WITHOUT INTERMEDIATE HORIZONTALS

NOMINAL DIMS.		JAMB 'J1' MULL 'M1'	MULL 'M2'	JAMB 'J2'/'J3' MULL 'M3'
WIDTH (W)	FRAME HEIGHT	EXT. (+) INT. (–)	EXT. (+) INT. (–)	EXT. (+) INT. (–)
36"	120"	105.0	105.0	105.0
39"		105.0	105.0	105.0
42"		105.0	105.0	105.0
45"		103.1	105.0	105.0
48"		97.3	105.0	105.0
51"		92.2	105.0	105.0
54"		87.8	105.0	105.0
57"		83.8	105.0	105.0
60"		80.3	105.0	105.0
63"		77.2	105.0	105.0
66"		74.4	105.0	105.0
69"		72.0	105.0	105.0
72"		69.7	105.0	105.0
75"		67.7	–	–
78"		65.9	–	–
81"		64.3	–	–
84"		62.9	–	–
88"		61.2	–	–
36"	126"	83.0	105.0	105.0
39"		83.0	105.0	105.0
42"		83.0	105.0	105.0
45"		83.0	105.0	105.0
48"		83.0	105.0	105.0
51"		81.1	105.0	105.0
54"		77.1	105.0	105.0
57"		73.6	105.0	105.0
60"		70.5	105.0	105.0
63"		67.7	104.0	105.0
66"		–	100.2	105.0
69"		–	96.7	105.0
72"		–	93.6	105.0
36"	132"	83.0	105.0	105.0
39"		83.0	105.0	105.0
42"		83.0	105.0	105.0
45"		78.6	105.0	105.0
48"		74.1	105.0	105.0
51"		70.1	105.0	105.0
54"		66.6	102.4	105.0
57"		63.6	97.7	105.0
60"		60.8	93.4	105.0
63"		–	89.7	105.0
66"		–	86.3	105.0
69"		–	83.2	105.0
72"		–	–	–
36"	138"	83.0	105.0	105.0
39"		78.4	105.0	105.0
42"		73.1	105.0	105.0
45"		68.5	105.0	105.0
48"		64.5	99.2	105.0
51"		61.1	93.8	105.0
54"		58.0	89.1	105.0
57"		55.3	84.9	105.0
60"		–	81.2	105.0
63"		–	77.8	105.0
66"		–	74.8	105.0

MULLION LOAD CAPACITY – PSF
MULLIONS WITHOUT INTERMEDIATE HORIZONTALS

NOMINAL DIMS.		JAMB 'J1' MULL 'M1'	MULL 'M2'	JAMB 'J2'/'J3' MULL 'M3'
WIDTH (W)	FRAME HEIGHT	EXT. (+) INT. (–)	EXT. (+) INT. (–)	EXT. (+) INT. (–)
36"	144"	74.2	105.0	105.0
39"		68.8	105.0	105.0
42"		64.1	98.5	105.0
45"		60.1	92.3	105.0
48"		56.6	86.9	105.0
51"		53.5	82.2	105.0
54"		50.8	78.0	105.0
57"		–	74.3	105.0
60"		–	71.0	105.0
63"		–	68.0	105.0
36"	150"	–	100.7	105.0
39"		–	93.2	105.0
42"		–	86.9	105.0
45"		–	81.4	105.0
48"		–	76.6	105.0
51"		–	72.4	105.0
54"		–	68.7	105.0
57"		–	65.4	105.0
60"		–	62.5	105.0
36"	156"	–	89.3	105.0
39"		–	82.7	105.0
42"		–	77.0	105.0
45"		–	72.1	105.0
48"		–	67.9	105.0
51"		–	64.1	105.0
54"		–	60.8	105.0
57"		–	57.9	105.0
36"	162"	–	79.6	105.0
39"		–	73.7	105.0
42"		–	68.6	105.0
45"		–	64.2	105.0
48"		–	60.4	105.0
51"		–	57.1	105.0
54"		–	54.1	101.9
57"		–	51.5	96.9
36"	168"	–	71.2	105.0
39"		–	65.9	105.0
42"		–	61.4	105.0
45"		–	57.5	105.0
48"		–	54.0	101.7
51"		–	51.0	96.0
54"		–	48.4	91.0

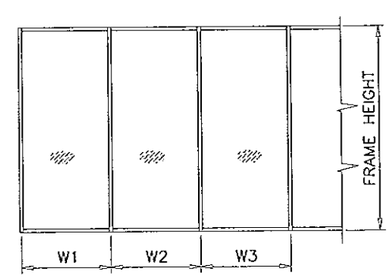

WIDTH (W) = W1
AT FRAME JAMB

WIDTH (W) = $\frac{W2 + W3}{2}$
AT FRAME MULLION

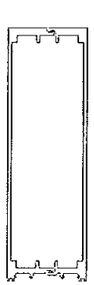

JAMB 'J1'
MULLION 'M1'
NO REINF.

Ix IN^4	Sx IN^3
40.8745	8.8446

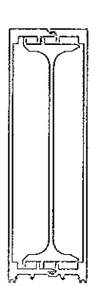

JAMB 'J2'
MULLION 'M2'
ALUM REINF.

Ix IN^4	Sx IN^3
62.0274	13.4218

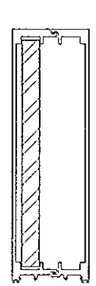

JAMB 'J3'
MULLION 'M3'
STEEL REINF.

	Ix IN^4	Sx IN^3
ALUMINUM	40.8745	8.4446
STEEL	26.6667	6.6667
TOTAL Ix ALUM + Ix STL X 2.9	118.2078	

Engr: JAVAD AHMAD
CIVIL
FLA. PE # 70592
C.A.N. 3538

OCT 12 2012

PRODUCT REVISED
as complying with the **Florida** Building Code
Acceptance No 12-1019.21
Expiration Date Jan. 13, 2016
By Manuel Perez
Miami Dade Product Control

AL-FAROOQ CORPORATION
ENGINEERS & PRODUCT DEVELOPMENT
1235 S.W. 87 AVE
MIAMI, FLORIDA 33174
TEL. (305) 264-8100 FAX. (305) 262-6978

STORE \ 97-42

OGT-1000 ALUMINUM WINDOW WALL SYS. (L.M.I.)

OGT WINDOW SYSTEMS
6910 N.W. 42 STREET
MIAMI, FL. 33166
TEL. (305) 594-3999 FAX. (305) 392-9555

revisions:

no	date	by	description
A	8.22.98		GENERAL REVISION
B	11.04.09		GENERAL REVISION
C	12.10.10		REV. PER BCCO COMMENTS
D	06.04.12		GENERAL REVISION
E	10.11.12		NO CHANGE THIS SHEET

date: 12-12-97
scale: 3/8" = 1"
dr. by: HAMID
chk. by:

drawing no.
97-42

sheet 4 of 11

MULLION LOAD CAPACITY – PSF
MULLIONS WITH INTERMEDIATE HORIZONTALS

NOMINAL DIMS.		JAMB 'J1' MULL 'M1'	MULL 'M2'	JAMB 'J2'/'J3' MULL 'M3'
WIDTH (W)	FRAME HEIGHT	EXT. (+) INT. (–)	EXT. (+) INT. (–)	EXT. (+) INT. (–)
36"	66"	105.0	105.0	105.0
39"		105.0	105.0	105.0
42"		105.0	105.0	105.0
45"		105.0	105.0	105.0
48"		105.0	105.0	105.0
51"		105.0	105.0	105.0
54"		105.0	105.0	105.0
57"		105.0	105.0	105.0
60"		105.0	105.0	105.0
63"		105.0	105.0	105.0
66"		105.0	105.0	105.0
69"		105.0	105.0	105.0
72"		105.0	105.0	105.0
75"		105.0	–	–
78"		105.0	–	–
81"		105.0	–	–
84"		105.0	–	–
88"		105.0	–	–
36"	72"	105.0	105.0	105.0
39"		105.0	105.0	105.0
42"		105.0	105.0	105.0
45"		105.0	105.0	105.0
48"		105.0	105.0	105.0
51"		105.0	105.0	105.0
54"		105.0	105.0	105.0
57"		105.0	105.0	105.0
60"		105.0	105.0	105.0
63"		105.0	105.0	105.0
66"		105.0	105.0	105.0
69"		105.0	105.0	105.0
72"		105.0	105.0	105.0
75"		105.0	–	–
78"		105.0	–	–
81"		105.0	–	–
84"		105.0	–	–
88"		105.0	–	–
36"	78"	105.0	105.0	105.0
39"		105.0	105.0	105.0
42"		105.0	105.0	105.0
45"		105.0	105.0	105.0
48"		105.0	105.0	105.0
51"		105.0	105.0	105.0
54"		105.0	105.0	105.0
57"		105.0	105.0	105.0
60"		105.0	105.0	105.0
63"		105.0	105.0	105.0
66"		105.0	105.0	105.0
69"		105.0	105.0	105.0
72"		105.0	105.0	105.0
75"		105.0	–	–
78"		105.0	–	–
81"		105.0	–	–
84"		105.0	–	–
88"		105.0	–	–

MULLION LOAD CAPACITY – PSF
MULLIONS WITH INTERMEDIATE HORIZONTALS

NOMINAL DIMS.		JAMB 'J1' MULL 'M1'	MULL 'M2'	JAMB 'J2'/'J3' MULL 'M3'
WIDTH (W)	FRAME HEIGHT	EXT. (+) INT. (–)	EXT. (+) INT. (–)	EXT. (+) INT. (–)
36"	84"	105.0	105.0	105.0
39"		105.0	105.0	105.0
42"		105.0	105.0	105.0
45"		105.0	105.0	105.0
48"		105.0	105.0	105.0
51"		105.0	105.0	105.0
54"		105.0	105.0	105.0
57"		105.0	105.0	105.0
60"		105.0	105.0	105.0
63"		105.0	105.0	105.0
66"		105.0	105.0	105.0
69"		105.0	105.0	105.0
72"		105.0	105.0	105.0
75"		105.0	–	–
78"		105.0	–	–
81"		105.0	–	–
84"		105.0	–	–
88"		105.0	–	–
36"	90"	105.0	105.0	105.0
39"		105.0	105.0	105.0
42"		105.0	105.0	105.0
45"		105.0	105.0	105.0
48"		105.0	105.0	105.0
51"		105.0	105.0	105.0
54"		105.0	105.0	105.0
57"		105.0	105.0	105.0
60"		105.0	105.0	105.0
63"		105.0	105.0	105.0
66"		105.0	105.0	105.0
69"		105.0	105.0	105.0
72"		105.0	105.0	105.0
75"		105.0	–	–
78"		105.0	–	–
81"		105.0	–	–
84"		105.0	–	–
88"		105.0	–	–
36"	96"	105.0	105.0	105.0
39"		105.0	105.0	105.0
42"		105.0	105.0	105.0
45"		105.0	105.0	105.0
48"		105.0	105.0	105.0
51"		105.0	105.0	105.0
54"		105.0	105.0	105.0
57"		105.0	105.0	105.0
60"		105.0	105.0	105.0
63"		105.0	105.0	105.0
66"		105.0	105.0	105.0
69"		105.0	105.0	105.0
72"		105.0	105.0	105.0
75"		105.0	–	–
78"		105.0	–	–
81"		105.0	–	–
84"		105.0	–	–
88"		104.8	–	–

MULLION LOAD CAPACITY – PSF
MULLIONS WITH INTERMEDIATE HORIZONTALS

NOMINAL DIMS.		JAMB 'J1' MULL 'M1'	MULL 'M2'	JAMB 'J2'/'J3' MULL 'M3'
WIDTH (W)	FRAME HEIGHT	EXT. (+) INT. (–)	EXT. (+) INT. (–)	EXT. (+) INT. (–)
36"	102"	105.0	105.0	105.0
39"		105.0	105.0	105.0
42"		105.0	105.0	105.0
45"		105.0	105.0	105.0
48"		105.0	105.0	105.0
51"		105.0	105.0	105.0
54"		105.0	105.0	105.0
57"		105.0	105.0	105.0
60"		105.0	105.0	105.0
63"		105.0	105.0	105.0
66"		105.0	105.0	105.0
69"		105.0	105.0	105.0
72"		105.0	105.0	105.0
75"		105.0	–	–
78"		104.7	–	–
81"		100.9	–	–
84"		97.3	–	–
88"		92.8	–	–
36"	108"	105.0	105.0	105.0
39"		105.0	105.0	105.0
42"		105.0	105.0	105.0
45"		105.0	105.0	105.0
48"		105.0	105.0	105.0
51"		105.0	105.0	105.0
54"		105.0	105.0	105.0
57"		105.0	105.0	105.0
60"		105.0	105.0	105.0
63"		105.0	105.0	105.0
66"		105.0	105.0	105.0
69"		105.0	105.0	105.0
72"		101.2	105.0	105.0
75"		97.2	–	–
78"		93.4	–	–
81"		90.0	–	–
84"		86.8	–	–
88"		82.8	–	–
36"	114"	105.0	105.0	105.0
39"		105.0	105.0	105.0
42"		105.0	105.0	105.0
45"		105.0	105.0	105.0
48"		105.0	105.0	105.0
51"		105.0	105.0	105.0
54"		105.0	105.0	105.0
57"		105.0	105.0	105.0
60"		105.0	105.0	105.0
63"		103.8	105.0	105.0
66"		99.1	105.0	105.0
69"		94.8	105.0	105.0
72"		90.8	105.0	105.0
75"		87.2	–	–
78"		83.9	–	–
81"		80.8	–	–
84"		77.9	–	–
88"		74.3	–	–

MULLION LOAD CAPACITY – PSF
MULLIONS WITH INTERMEDIATE HORIZONTALS

NOMINAL DIMS.		JAMB 'J1' MULL 'M1'	MULL 'M2'	JAMB 'J2'/'J3' MULL 'M3'
WIDTH (W)	FRAME HEIGHT	EXT. (+) INT. (–)	EXT. (+) INT. (–)	EXT. (+) INT. (–)
36"	120"	105.0	105.0	105.0
39"		105.0	105.0	105.0
42"		105.0	105.0	105.0
45"		105.0	105.0	105.0
48"		105.0	105.0	105.0
51"		105.0	105.0	105.0
54"		105.0	105.0	105.0
57"		103.6	105.0	105.0
60"		98.4	105.0	105.0
63"		93.7	105.0	105.0
66"		89.4	105.0	105.0
69"		85.6	102.4	105.0
72"		82.0	98.2	105.0
75"		78.7	–	–
78"		75.7	–	–
81"		72.9	–	–
84"		70.3	–	–
88"		67.1	–	–
36"	126"	83.0	105.0	105.0
39"		83.0	105.0	105.0
42"		83.0	105.0	105.0
45"		83.0	105.0	105.0
48"		83.0	105.0	105.0
51"		81.8	105.0	105.0
54"		77.3	105.0	105.0
57"		73.2	105.0	105.0
60"		69.5	105.0	105.0
63"		66.2	101.8	105.0
66"		–	97.1	105.0
69"		–	92.9	105.0
72"		–	89.0	105.0
36"	132"	83.0	105.0	105.0
39"		83.0	105.0	105.0
42"		83.0	105.0	105.0
45"		83.0	105.0	105.0
48"		79.2	105.0	105.0
51"		74.5	105.0	105.0
54"		70.4	105.0	105.0
57"		66.7	102.5	105.0
60"		63.4	97.4	105.0
63"		–	92.7	105.0
66"		–	88.5	105.0
69"		–	84.7	105.0
72"		–	–	–
36"	138"	83.0	105.0	105.0
39"		83.0	105.0	105.0
42"		82.8	105.0	105.0
45"		77.3	105.0	105.0
48"		72.5	105.0	105.0
51"		68.2	104.8	105.0
54"		64.4	99.0	105.0
57"		61.0	93.8	105.0
60"		–	89.1	105.0
63"		–	84.8	105.0
66"		–	81.0	105.0

MULLION LOAD CAPACITY – PSF
MULLIONS WITH INTERMEDIATE HORIZONTALS

NOMINAL DIMS.		JAMB 'J1' MULL 'M1'	MULL 'M2'	JAMB 'J2'/'J3' MULL 'M3'
WIDTH (W)	FRAME HEIGHT	EXT. (+) INT. (–)	EXT. (+) INT. (–)	EXT. (+) INT. (–)
36"	144"	83.0	105.0	105.0
39"		81.9	105.0	105.0
42"		76.1	105.0	105.0
45"		71.0	105.0	105.0
48"		66.5	102.3	105.0
51"		62.6	96.2	105.0
54"		59.2	90.9	105.0
57"		–	86.1	105.0
60"		–	81.8	105.0
63"		–	77.9	105.0
36"	150"	–	105.0	105.0
39"		–	105.0	105.0
42"		–	105.0	105.0
45"		–	100.5	105.0
48"		–	94.2	105.0
51"		–	88.7	105.0
54"		–	83.8	105.0
57"		–	79.4	105.0
60"		–	75.4	105.0
36"	156"	–	105.0	105.0
39"		–	105.0	105.0
42"		–	99.6	105.0
45"		–	92.9	105.0
48"		–	87.1	105.0
51"		–	82.0	105.0
54"		–	77.5	105.0
57"		–	73.4	105.0
36"	162"	–	105.0	105.0
39"		–	99.4	105.0
42"		–	92.3	105.0
45"		–	86.2	105.0
48"		–	80.8	105.0
51"		–	76.0	105.0
54"		–	71.8	105.0
57"		–	68.0	105.0
36"	168"	–	100.2	105.0
39"		–	92.5	105.0
42"		–	85.9	105.0
45"		–	80.1	105.0
48"		–	75.1	105.0
51"		–	70.7	105.0
54"		–	66.8	105.0

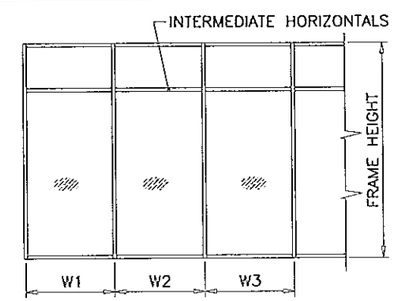

WIDTH (W) = W1
AT FRAME JAMB

WIDTH (W) = $\frac{W2 + W3}{2}$
AT FRAME MULLION

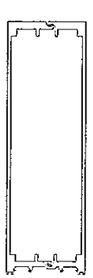

JAMB 'J1'
MULLION 'M1'
NO REINF.

Ix IN^4	Sx IN^3
40.8745	8.8446

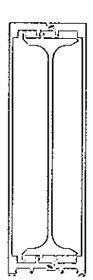

JAMB 'J2'
MULLION 'M2'
ALUM REINF.

Ix IN^4	Sx IN^3
62.0274	13.4218

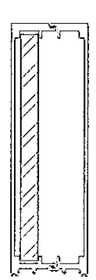

JAMB 'J3'
MULLION 'M3'
STEEL REINF.

	Ix IN^4	Sx IN^3
ALUMINUM	40.8745	8.4446
STEEL	26.6667	6.6667
TOTAL Ix ALUM + Ix STL X 2.9	118.2078	

Engr: JAVAD AHMAD
CIVIL
FLA. PE # 70592
C.A.N. 3538

OCT 12 2012

PRODUCT REVISED
as complying with the Florida Building Code
Acceptance No 12-1019.21
Expiration Date Jan. 13, 2016
By Manuel Diaz
Miami Dade Product Control

AL-FAROOQ CORPORATION
ENGINEERS & PRODUCT DEVELOPMENT
1235 S.W. 87 AVE
MIAMI, FLORIDA 33174
TEL. (305) 264-8100 FAX. (305) 262-6978

STORE\97-42

OGT-1000 ALUMINUM WINDOW WALL SYS. (L.M.I.)

OGT WINDOW SYSTEMS
6910 N.W. 42 STREET
MIAMI, FL. 33166
TEL. (305) 594-3999 FAX. (305) 392-9555

revisions:

no	date	by	description
A	8.22.98		GENERAL REVISION
B	11.04.09		GENERAL REVISION
C	12.10.10		REV. PER BCCO COMMENTS
D	06.04.12		GENERAL REVISION
E	10.11.12		NO CHANGE THIS SHEET

date: 12-12-97
scale: 3/8" = 1"
dr. by: HAMID
chk. by:

drawing no.
97-42

sheet 5 of 11

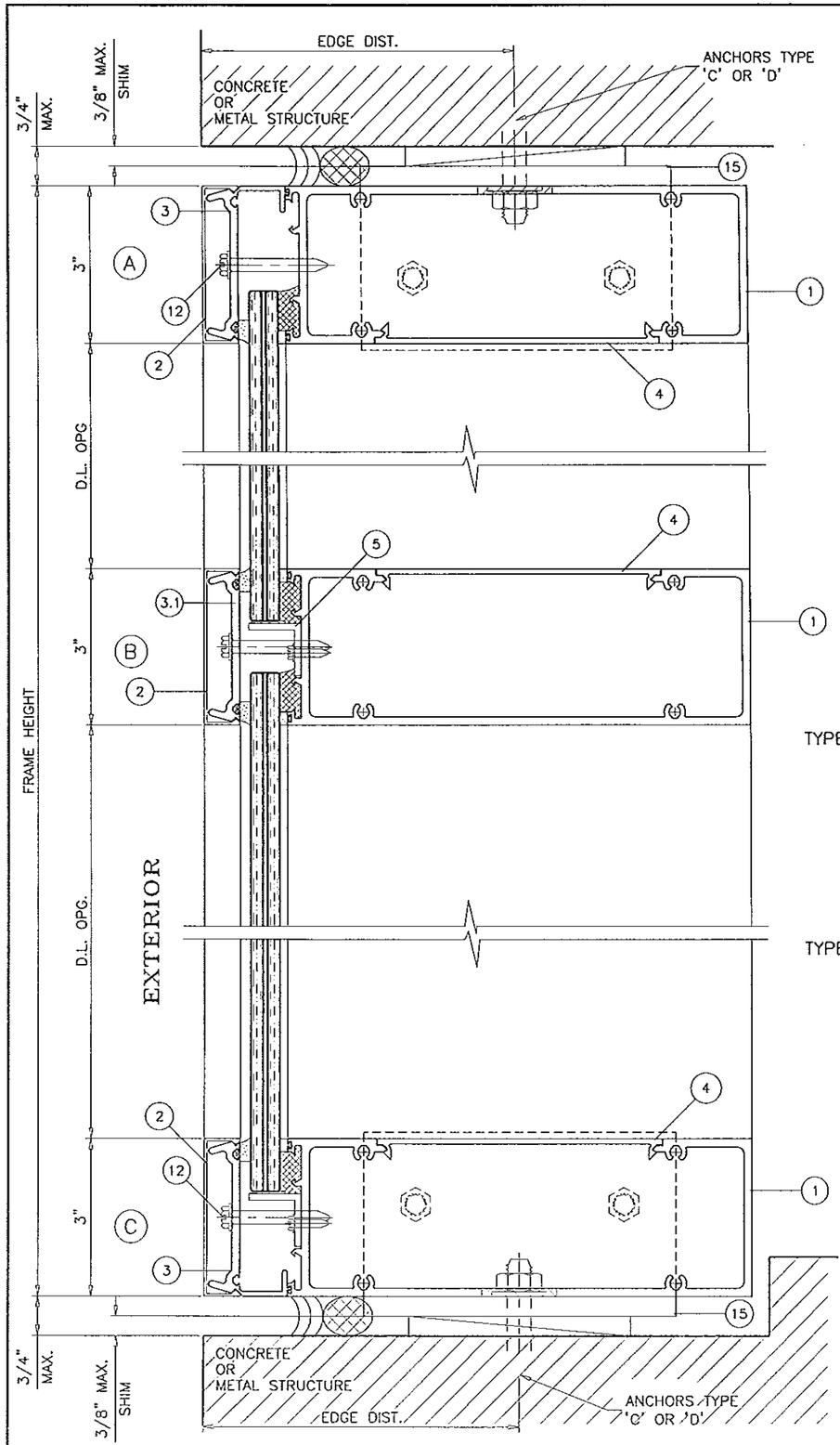

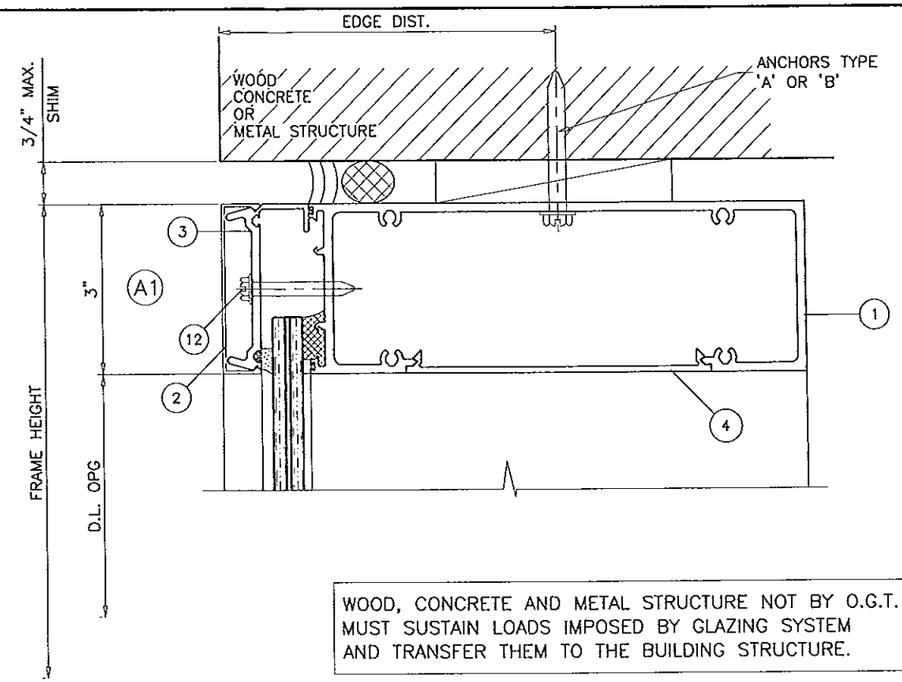

WOOD, CONCRETE AND METAL STRUCTURE NOT BY O.G.T. MUST SUSTAIN LOADS IMPOSED BY GLAZING SYSTEM AND TRANSFER THEM TO THE BUILDING STRUCTURE.

ANCHORS DIRECTLY THRU FRAME:

AS SHOWN IN DETAIL 'A1', SEE ELEV. FOR SPACING

TYPE 'A'– 5/16" DIA. ULTRACON BY 'ELCO' (Fu=177 KSI, Fy=155 KSI)

INTO 2BY WOOD BUCKS OR WOOD STRUCTURES
1–7/8" MIN. PENETRATION INTO WOOD

THRU 1BY BUCKS INTO CONC. OR MASONRY
1–1/4" MIN. EMBED INTO CONC. OR MASONRY

DIRECTLY INTO CONC. OR MASONRY
1–1/4" MIN. EMBED INTO CONC. OR MASONRY

TYPE 'B'– 5/16" DIA. TEKS OR SELF DRILLING SCREWS (GRADE 2 CRS)

INTO METAL STRUCTURES
STEEL : 1/8 THK. MIN. (Fy = 36 KSI MIN.)
ALUMINUM : 1/8" THK. MIN. (6063–T5 MIN.)

TYPICAL EDGE DISTANCE

INTO CONCRETE AND MASONRY = 2–1/2" MIN.
INTO WOOD STRUCTURE = 1–1/4" MIN.
INTO METAL STRUCTURE = 3/4" MIN.

ANCHORS THRU CLIP ANGLE:

AS SHOWN IN DETAIL 'A',

TYPE 'C'– 1/2" DIA. KWIK BOLT–3 EXPANSION ANCHOR

DIRECTLY INTO CONCRETE
(2) PER ANGLE
2–1/2" MIN. EMBED INTO CONC.
3–3/8" MIN. EDGE DISTANCE
3–1/2" MIN. CL TO CL SPACING

TYPE 'D'– 5/16" DIA. DRIL–FLEX SELF DRILLING SCREWS

INTO METAL STRUCTURES (STEEL 1/8" MIN. THK.)
(4) PER ANGLE
3/4" MIN. EDGE DISTANCE
3" MIN. CL TO CL SPACING

CONCRETE f'c = 3000 PSI MIN.
(STEEL IN CONTACT WITH ALUMINUM TO BE PLATED OR PAINTED)

SEALANTS:

ALL FRAME CORNERS, JOINTS, MULLION SEAMS AND PERIMETER OF GLAZING BEAD TO FRAME SEALED WITH DOW CORNING 795 SEALANT.

Engr: JAVAD AHMAD
CIVIL
FLA. PE # 70592
C.A.N. 3538

OCT 12 2012

PRODUCT REVISED
as complying with the Florida Building Code
Acceptance No 12-1019.21
Expiration Date Jan. 13, 2016
By Manuel Sera
Miami Dade Product Control

AL-FAROOQ CORPORATION
ENGINEERS & PRODUCT DEVELOPMENT
1235 S.W. 87 AVE
MIAMI, FLORIDA 33174
TEL. (305) 264-8100 FAX. (305) 262-6973

STORE\97-42

OGT-1000 ALUMINUM WINDOW WALL SYS. (L.M.I.)

OGT WINDOW SYSTEMS
6910 N.W. 42 STREET
MIAMI, FL. 33166
TEL. (305) 594-3999 FAX. (305) 392-9555

revisions:

no	date	by	description
A	8.22.98		GENERAL REVISION
B	11.04.09		GENERAL REVISION
C	12.10.10		REV. PER BCCO COMMENTS
D	06.04.12		GENERAL REVISION
E	10.11.12		NO CHANGE THIS SHEET

date: 12-12-97
scale: 3/8" = 1"
dr. by: HAMID
chk. by:

drawing no.
97-42

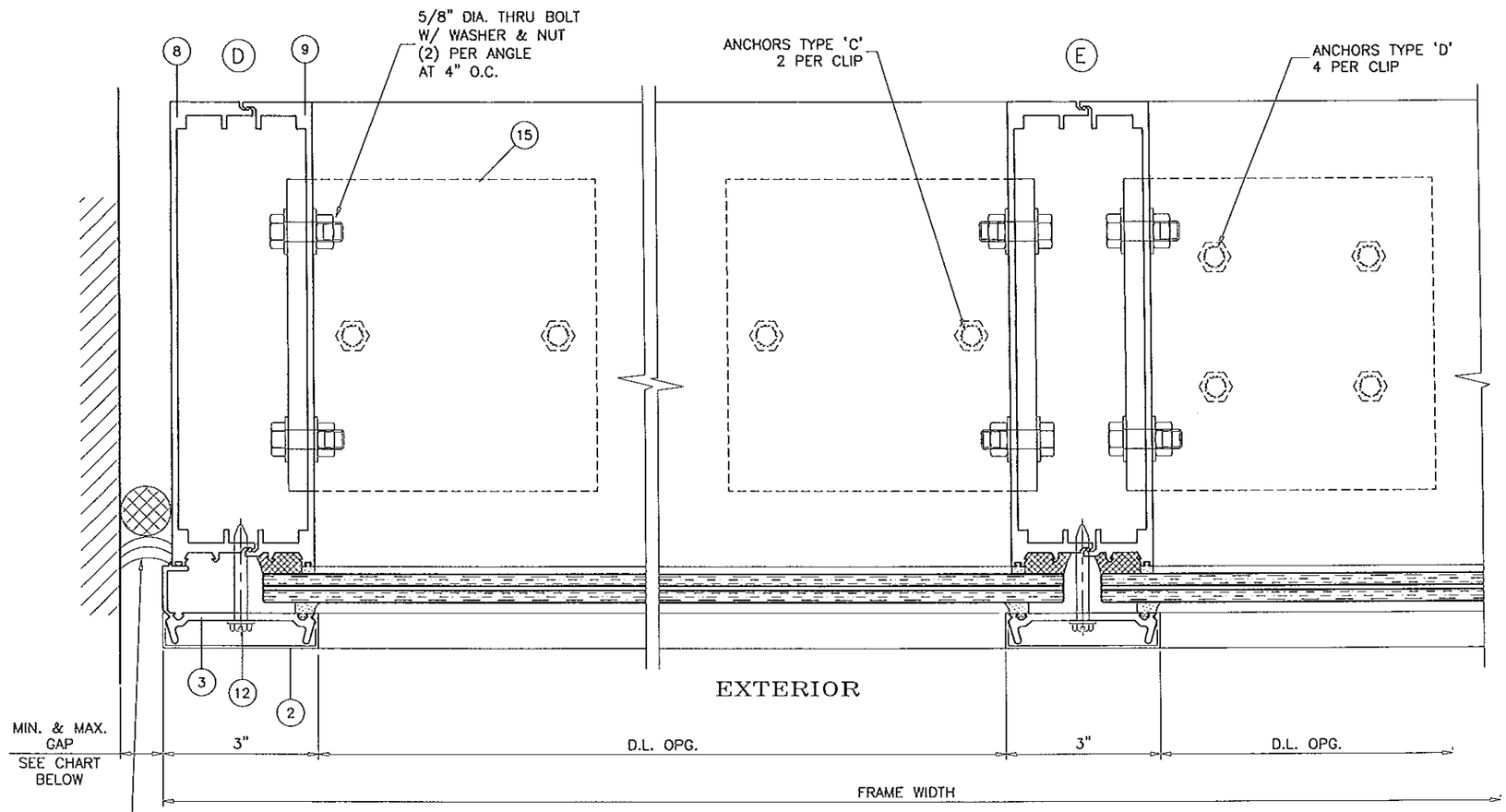

JAMB 'J1'
WITHOUT REINFORCEMENT

INTERMEDIATE VERTICAL MULLION 'M1'
WITHOUT REINFORCEMENT

MAX. FRAME HEIGHT	MIN. GAP	MAX. GAP
144"	5/8"	1"
120"	1/2"	1"
96"	1/2"	1"

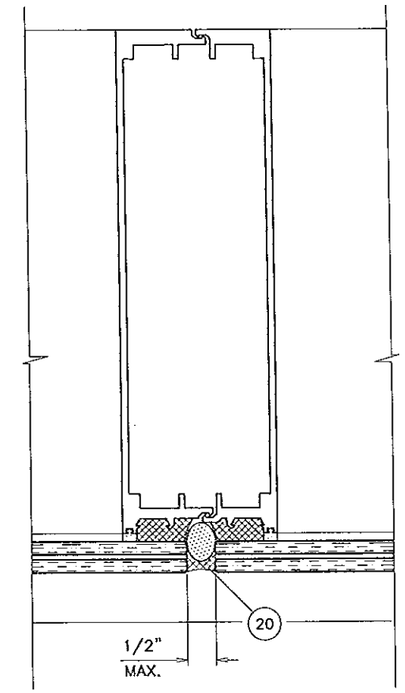

INTERMEDIATE MULLION OPTION
WITHOUT GLAZING RETAINER

Engr: JAVAD AHMAD
CIVIL
FLA. PE # 70592
C.A.N. 3538

OCT 12 2012

PRODUCT REVISED
as complying with the Florida
Building Code
Acceptance No 12-1019.21
Expiration Date Jan. 13, 2016
By Manuel Diaz
Miami Dade Product Control

AL-FAROOQ CORPORATION
ENGINEERS & PRODUCT DEVELOPMENT
1235 S.W. 87 AVE
MIAMI, FLORIDA 33174
TEL. (305) 264-8100 FAX. (305) 262-6978

STORE\97-42

OGT-1000 ALUMINUM WINDOW WALL SYS. (L.M.I.)

OGT WINDOW SYSTEMS
6910 N.W. 42 STREET
MIAMI, FL. 33166
TEL. (305) 594-3999 FAX. (305) 392-9555

revisions:

no	date	by	description
A	8.22.98		GENERAL REVISION
B	11.04.09		GENERAL REVISION
C	12.10.10		REV. PER BCCO COMMENTS
D	06.04.12		GENERAL REVISION
E	10.11.12		NO CHANGE THIS SHEET

date: 12-12-97
scale: 3/8" = 1"
dr. by: HAMID
chk. by:

drawing no.
97-42

sheet 7 of 11

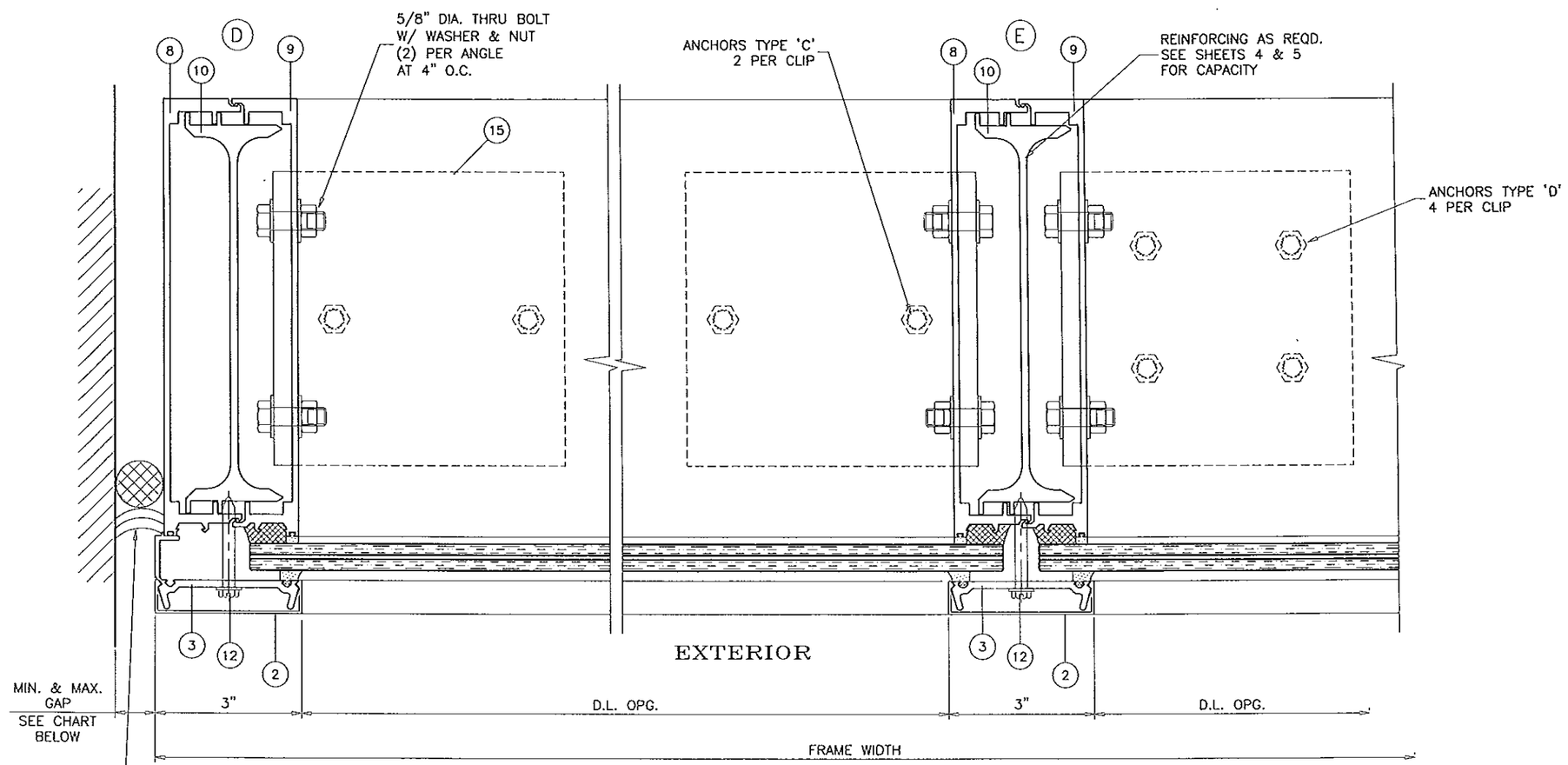

JAMB 'J2'
WITH ALUM REINFORCEMENT

INTERMEDIATE VERTICAL MULLION 'M2'
WITH ALUMINUM REINFORCEMENT

MAX. FRAME HEIGHT	MIN. GAP	MAX. GAP
168"	3/4"	1"
144"	5/8"	1"
120"	1/2"	1"
96"	1/2"	1"

Engr: JAVAD AHMAD
CIVIL
FLA. PE # 70592
C.A.N. 3538

OCT 12 2012

PRODUCT REVISED
as complying with the Florida
Building Code
Acceptance No 12-1019.21
Expiration Date Jan. 13, 2016
By Manuel Lizo
Miami Dade Product Control

AL-FAROOQ CORPORATION
ENGINEERS & PROJECT DEVELOPMENT
1235 S.W. 87 AVE
MIAMI, FLORIDA 33174
TEL. (305) 264-8100 FAX. (305) 262-6978

STORE\97-42

OGT-1000 ALUMINUM WINDOW WALL SYS. (L.M.I.)

OGT WINDOW SYSTEMS
6910 N.W. 42 STREET
MIAMI, FL. 33166
TEL. (305) 594-3999 FAX. (305) 392-9555

revisions:

no	date	by	description
C	12.10.10		REV. PER BCCO COMMENTS
D	06.04.12		GENERAL REVISION
E	10.11.12		NO CHANGE THIS SHEET

date: 12-12-97
scale: 3/8" = 1"
dr. by: HAMID
chk. by:

drawing no.
97-42

sheet 8 of 11

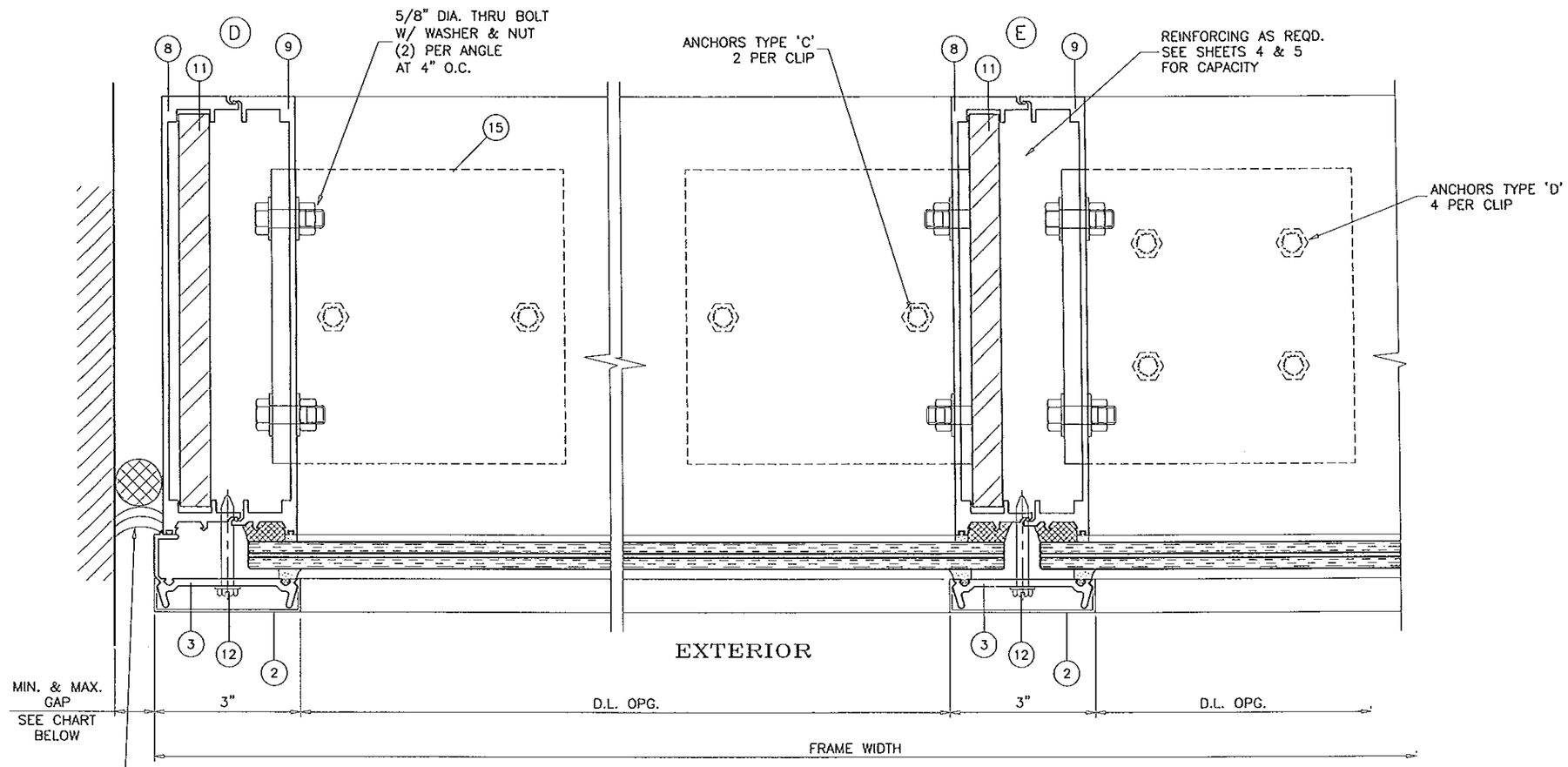

JAMB 'J3'
WITH STEEL REINFORCEMENT

INTERMEDIATE VERTICAL MULLION 'M3'
WITH STEEL REINFORCEMENT

MAX. FRAME HEIGHT	MIN. GAP	MAX. GAP
168"	3/4"	1"
144"	5/8"	1"
120"	1/2"	1"
96"	1/2"	1"

Engr: JAVAD AHMAD
CIVIL
FLA. PE # 70592
C.A.N. 3538

OCT 12 2012

PRODUCT REVISED
as complying with the Florida
Building Code
Acceptance No 12-1019.21
Expiration Date Jan. 13, 2016
By Manuel Perez
Miami-Dade Product Control

AL-FAROOQ CORPORATION
ENGINEERS & PRODUCT DEVELOPMENT
1235 S.W. 87 AVE
MIAMI, FLORIDA 33174
TEL. (305) 264-8100 FAX. (305) 262-6978

STORE\97-42

OGT-1000 ALUMINUM WINDOW WALL SYS. (L.M.I.)

OGT WINDOW SYSTEMS
6910 N.W. 42 STREET
MIAMI, FL. 33166
TEL. (305) 594-3999 FAX. (305) 392-9555

revisions:

no	date	by	description
C	12.10.10		REV. PER BCCO COMMENTS
D	06.04.12		GENERAL REVISION
E	10.11.12		NO CHANGE THIS SHEET

date: 12-12-97
scale: 3/8" = 1"
dr. by: HAMID
chk. by:

drawing no.
97-42

sheet 9 of 11

ITEM NO.	PART NUMBER	QUANTITY	DESCRIPTION	MATERIAL	MANF./SUPPLIER/REMARKS
1	OIC-017	AS REQD.	FRAME HEAD/SILL/INTERMEDIATE	6063-T6	-
2	OIC-019	AS REQD.	GLAZING RETAINER COVER	6063-T6	-
3	OIC-018	AS REQD.	PERIMETER GLAZING RETAINER (LAM. GLASS)	6063-T6	-
3.1	-	AS REQD.	INTERMEDIATE GLAZING RETAINER	6063-T6	-
4	CSM-1027	AS REQD.	SNAP-IN COVER	6063-T6	-
5	-	AS REQD.	SETTING ANGLE (LAM. GLASS)	6063-T6	4" LONG
5A	-	AS REQD.	SETTING ANGLE (INSUL. LAM. GLASS)	6063-T6	6" LONG
6	-	-	-	-	-
7	-	2/ CORNER	ROLL FORMED ALUMINUM CORNER	6063-T6	-
8	OIC-3	AS REQD.	MALE MULLION	6063-T6	-
9	OIC-2	-	FEMALE MULLION	6063-T6	-
10	OIC-68	-	MULLION REINFORCING	6063-T6	-
11	-	-	MULLION REINFORCING	STEEL	-
12	1/4" DIA.	AS REQD.	GLAZING RETAINER SCREWS	-	WASHER HEAD TEKS, AT 12" O.C.
13	#10 X 3/4"	1/ CLIP	SETTING ANGLE SCREWS (LAM. GLASS)	-	TEKS
13A	#10 X 3/4"	3/ CLIP	SETTING ANGLE SCREWS (INSUL. LAM. GLASS)	-	TEKS, AT 2-1/2" O.C.
14	#14 X 2"	4/ CORNER	FRAME ASSEMBLY SCREWS	ST. STEEL	HH SMS
15	-	2/ MULLION	3-1/2 X 6 X 3/8" ALUM ANGLE, 6" LONG	6063-T6	(1) AT EACH SIDE OF MULLION
16	WE-1641	-	INT. GLAZING GASKET	PVC	UNIVERSAL RUBBER CO.
17	2338	-	EXT. GLAZING GASKET	PVC	UNIVERSAL RUBBER CO.
18	-	-	SEALANT AND BACKER ROD	-	-
20	DOW 995	AS REQD.	GLAZING COMPOUND	SILICONE	DOW CORNING
21	-	AS REQD.	SETTING CHANNEL	6063-T6	3/4 X 3/4 X 1/8"
22	#10 X 1-1/2"	AS REQD.	CHANNEL SCREWS	-	FH TEKS, AT 24" O.C.
23	-	AS REQD.	DOUBLE FACE TAPE	-	-
24	-	AS REQD.	SETTING BLOCK, 1-1/2" X 4" X 1/16"	NEOPRENE	DUROMETER 80±5 SHORE A
24A	-	AS REQD.	SETTING BLOCK, 1-1/2" X 4" X 1/8"	NEOPRENE	DUROMETER 80±5 SHORE A

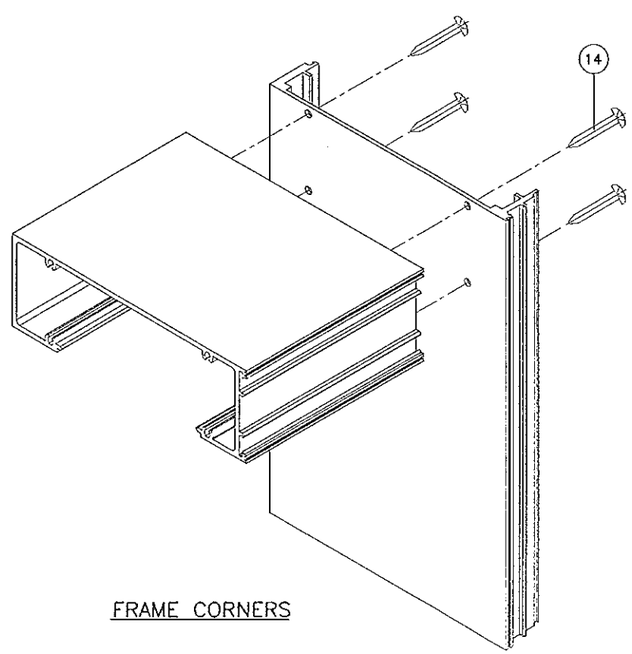

FRAME CORNERS

Engr: JAVAD AHMAD
CIVIL
FLA. PE # 70592
C.A.N. 3538

OCT 12 2012

PRODUCT REVISED
as complying with the Florida
Building Code
Acceptance No 12-1019.21
Expiration Date Jan. 13, 2016
By Manuel Lopez
Miami Dade Product Control

AL-FAROOQ CORPORATION
ENGINEERS & PRODUCT DEVELOPMENT
1235 S.W. 87 AVE
MIAMI, FLORIDA 33174
TEL. (305) 264-8100 FAX. (305) 262-6978

STORE\97-42

OGT-1000 ALUMINUM WINDOW WALL SYS. (L.M.I.)

OGT WINDOW SYSTEMS
6910 N.W. 42 STREET
MIAMI, FL. 33166
TEL. (305) 594-3999 FAX. (305) 392-9555

revisions:

no	date	by	description
A	8.22.98		GENERAL REVISION
B	11.04.09		GENERAL REVISION
C	12.10.10		REV. PER BCCO COMMENTS
D	06.04.12		GENERAL REVISION
E	10.11.12		NO CHANGE THIS SHEET

date: 12-12-97
scale: 3/8" = 1"
dr. by: HAMID
chk. by:

drowing no.
97-42

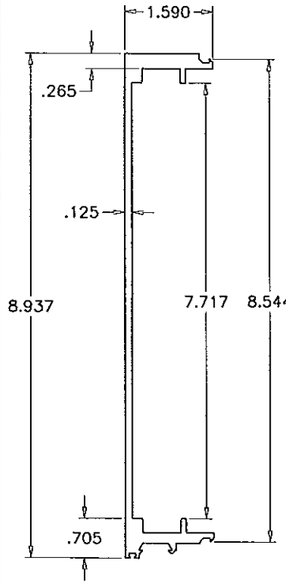

8 MALE MULLION

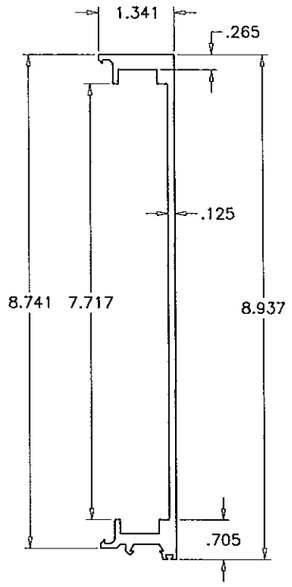

9 FEMALE MULLION

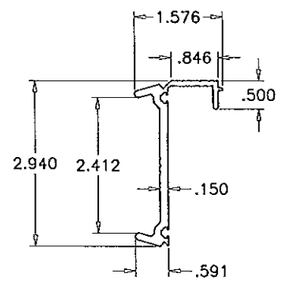

3 PERIMETER GLAZING RETAINER (LAM. GLASS)

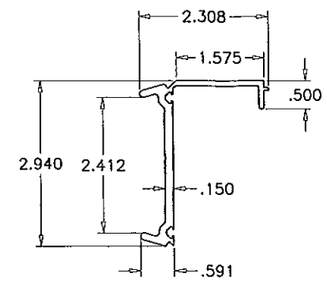

3A PERIMETER GLAZING RETAINER (INSUL. LAM. GLASS)

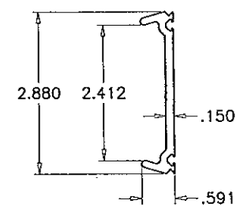

3.1 INTERMEDIATE GLAZING RETAINER

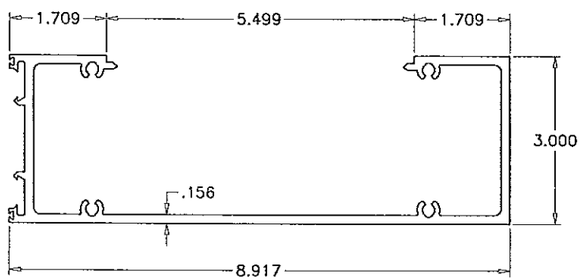

1 FRAME HEAD/SILL/INTERMEDIATE

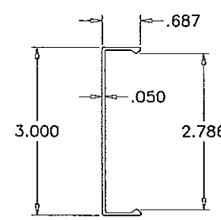

2 GLAZING RETAINER COVER

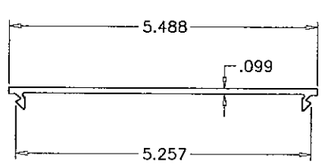

4 SNAP-IN COVER

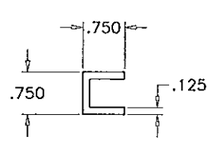

21 SETTING CHANNEL

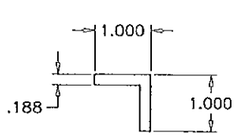

5 SETTING ANGLE (LAM. GLASS)

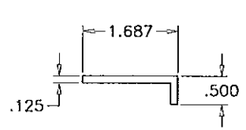

5A SETTING ANGLE (INSUL. LAM. GLASS)

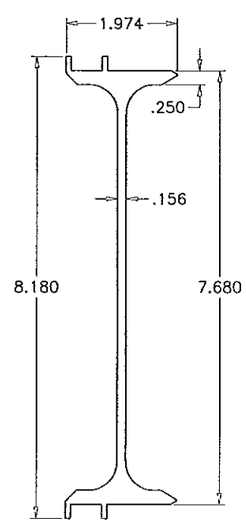

10 MULLION REINFORCING ALUMINUM

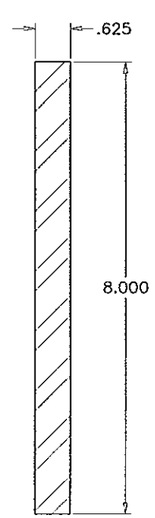

11 MULLION REINFORCING STEEL

Engr: JAVAD AHMAD
CIVIL
FLA. PE # 70592
C.A.N. 3538

OCT 12 2012

PRODUCT REVISED
to complying with the Florida
Building Code
Acceptance No 12-1019.21
Expiration Date Jan 15, 2016
By Manuel Perez
Miami/Dade Product Control.

AL-FAROOQ CORPORATION
ENGINEERS & PRODUCT DEVELOPMENT
1235 S.W. 87 AVE
MIAMI, FLORIDA 33174
TEL. (305) 264-8100 FAX. (305) 262-6978

STORE\97-42

OGT-1000 ALUMINUM WINDOW WALL SYS. (L.M.I.)

OGT WINDOW SYSTEMS
6910 N.W. 42 STREET
MIAMI, FL. 33166
TEL. (305) 594-3999 FAX. (305) 392-9555

revisions:

no	date	by	description
A	8.22.98		GENERAL REVISION
B	11.04.09		GENERAL REVISION
C	12.10.10		REV. PER BCCO COMMENTS
D	06.04.12		GENERAL REVISION
E	10.11.12		NO CHANGE THIS SHEET

date: 12-12-97
scale: 3/8" = 1"
dr. by: HAMID
chk. by:

drawing no.
97-42

sheet 11 of 11