MIAMI-DADE COUNTY
PRODUCT CONTROL SECTION
11805 SW 26 Street, Room 208
Miami, Florida 33175-2474
T (786) 315-2590 F (786) 315-2599
www.miamidade.gov/economy

DEPARTMENT OF REGULATORY AND ECONOMIC RESOURCES (RER)
BOARD AND CODE ADMINISTRATION DIVISION

NOTICE OF ACCEPTANCE (NOA)

Maxim Industries, Inc.
1630 Terre Colony Court
Dallas, TX 75212

SCOPE:

This NOA is being issued under the applicable rules and regulations governing the use of construction materials. The documentation submitted has been reviewed and accepted by Miami-Dade County RER-Product Control Section to be used in Miami Dade County and other areas where allowed by the Authority Having Jurisdiction (AHJ).

This NOA shall not be valid after the expiration date stated below. The Miami-Dade County Product Control Section (In Miami Dade County) and/or the AHJ (in areas other than Miami Dade County) reserve the right to have this product or material tested for quality assurance purposes. If this product or material fails to perform in the accepted manner, the manufacturer will incur the expense of such testing and the AHJ may immediately revoke, modify, or suspend the use of such product or material within their jurisdiction. RER reserves the right to revoke this acceptance, if it is determined by Miami-Dade County Product Control Section that this product or material fails to meet the requirements of the applicable building code.

This product is approved as described herein, and has been designed to comply with the Florida Building Code, including the High Velocity Hurricane Zone.

DESCRIPTION: Model MAX DGCM 07 Curb Mount Aluminum Skylight

APPROVAL DOCUMENT: Drawing No. **MAX DGCM 07**, titled "Maxim Impact Glass Curb Mount Skylight", prepared by Maxim Industries, Inc, sheets 1 and 2 of 2, dated 12/12/2012, signed and sealed by Richard Boyette, P.E., bearing the Miami-Dade County Product Control renewal stamp with the Notice of Acceptance number and expiration date by the Miami-Dade County Product Control Section.

MISSILE IMPACT RATING: Large and Small Missile Impact Resistant

LABELING: Each unit shall bear a permanent label with the manufacturer's name or logo, city, state, model/series and following statement: "Miami-Dade County Product Control Approved", unless otherwise noted herein.

RENEWAL of this NOA shall be considered after a renewal application has been filed and there has been no change in the applicable building code negatively affecting the performance of this product.

TERMINATION of this NOA will occur after the expiration date or if there has been a revision or change in the materials, use, and/or manufacture of the product or process. Misuse of this NOA as an endorsement of any product, for sales, advertising or any other purposes shall automatically terminate this NOA. Failure to comply with any section of this NOA shall be cause for termination and removal of NOA.

ADVERTISEMENT: The NOA number preceded by the words Miami-Dade County, Florida, and followed by the expiration date may be displayed in advertising literature. If any portion of the NOA is displayed, then it shall be done in its entirety.

INSPECTION: A copy of this entire NOA shall be provided to the user by the manufacturer or its distributors and shall be available for inspection at the job site at the request of the Building Official.

This NOA **renews NOA # 07-1105.05** and consists of this page 1 and evidence page E-1, as well as approval document mentioned above.

The submitted documentation was reviewed by **Carlos M. Utrera, P.E.**

MIAMI-DADE COUNTY APPROVED

01/10/2013

NOA No. 12-1022.02
Expiration Date: January 10, 2018
Approval Date: January 17, 2013

NOTICE OF ACCEPTANCE: EVIDENCE SUBMITTED

A. DRAWINGS

1. Drawing No. **MAX DGCM 07**, titled "Maxim Impact Glass Curb Mount Skylight", prepared by Maxim Industries, Inc, sheets 1 and 2 of 2, dated 12/12/2012, signed and sealed by Richard Boyette, P.E.

B. TESTS ***"Submitted under NOA # 07-1105.05"***

1. Test reports on 1) Air Infiltration Test, per FBC, TAS 202-94
   2) Uniform Static Air Pressure Test, Loading per FBC TAS 202-94
   3) Water Resistance Test, per FBC, TAS 202-94
   4) Large Missile Impact Test per FBC, TAS 201-94
   5) Cyclic Wind Pressure Loading per FBC, TAS 203-94

   along with marked-up drawings and installation of the Maxim Impact Glass Curb Mount Skylight, prepared by Hurricane Test Laboratory LLC, Test Report No. **T482-0604-07**, dated 10/09/2007, signed and sealed by Vinu J. Abraham, P.E.

C. CALCULATIONS ***"Submitted under NOA # 07-1105.05"***

1. Anchor calculations dated 10/28/2007, prepared, signed and sealed by Richard Boyette, P.E.

D. QUALITY ASSURANCE

1. Miami-Dade Department of Regulatory and Economic Resources (RER)

E. MATERIAL CERTIFICATIONS

1. Notice of acceptance No. 11-0624.02 issued to E.I. DuPont De Nemours & Co., Inc, for their SentryGlas Interlayer, approved on 05/10/2012 and expiring on 12/11/2016.

F. STATEMENTS

1. Statement letter of code conformance to 2010 FBC issued by Richard Boyette, dated 12/23/2012, signed and sealed by Richard Boyette, P.E.
2. No financial interest letter issued by Richard Boyette, dated 09/11/2012, signed and sealed by Richard Boyette, P.E.

   "Submitted under NOA # 07-1105.05"

3. Code compliance letter dated 10/29/2007, issued, signed and sealed by Richard Boyette, P.E.

01/10/2013

Carlos M. Utrera, P.E.
Product Control Examiner
NOA No. 12-1022.02
Expiration Date: January 10, 2018
Approval Date: January 17, 2013

Detail #1:
Frame, Gutter Seat & Glass Section Detail

DESIGN PRESSURE = +60psf / -100psf

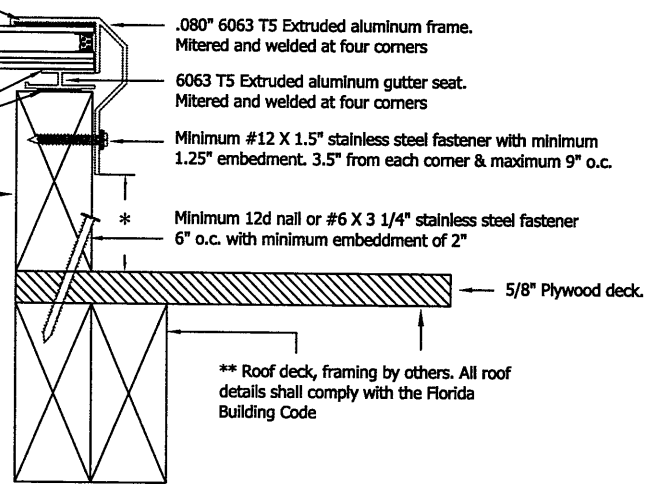

* Minimum distance = 4" from aluminum frame to roof surface for shingles or BUR without insulation. For insulation and roof tile add insulation or roof tile thickness to 4" minimum height

** Curb buck = Nominal Southern yellow pine 2 X 6 with skylight set on buck with minimum 1/8" tall bead of Dow Corning 795 silicone building sealant. Installation fasteners are stainless steel #12 X 1.5" with minimum 1.25" embedment located 3.5" from each corner and centered maximum 9" on center

Detail #2
Frame Corner Construction and Weld Detail

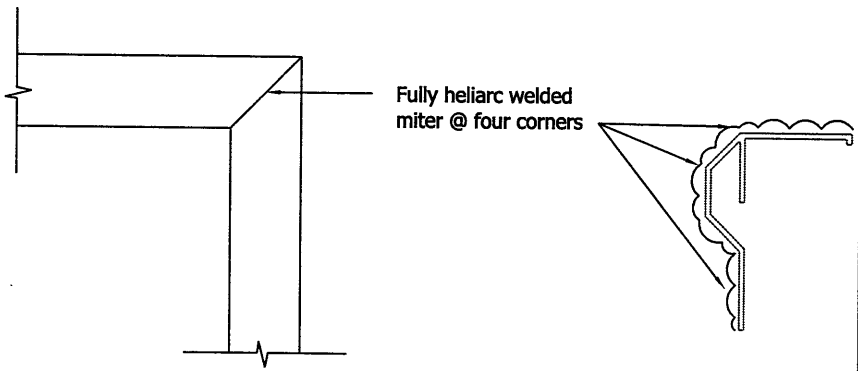

Detail #3
Glazing Detail

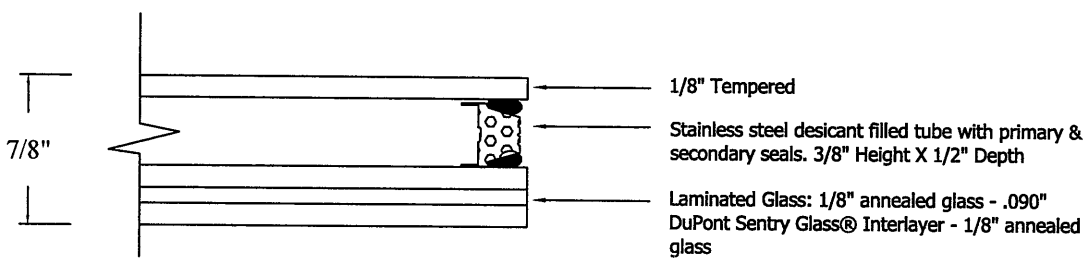

Detail #4
Gutter Construction and Weld Detail

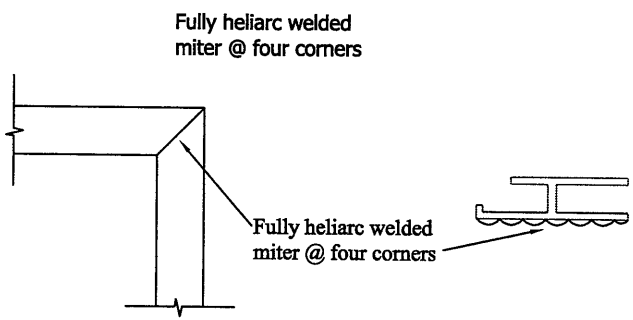

PRODUCT RENEWED
as complying with the Florida Building Code
Acceptance No 12-1022.02
Expiration Date 01/10/2018
By
Miami Dade Product Control

RICHARD BOYETTE
FL PE # 42485
4031 COCONUT BLVD
ROYAL PALM BCH FL 33411
561-790-5766

APPROVED DEC 19 2012

MAXIM
HURRICANE RESISTANT
S K Y L I G H T S
1630 Terre Colony Court Dallas, Texas 75212
P: 888.222.4898 P: 214.905.2021 F: 214.905.2024
www.maximskylights.com

TITLE: MAXIM IMPACT GLASS CURB MOUNT SKYLIGHT
DRAWING NO.: MAX DGCM 07 DATE: 2012.12.12
DRAW BY: DJT REVISION: #2
SCALE: NTS
SHEET: 1 OF 2

DESIGN PRESSURE = +60psf / -100psf

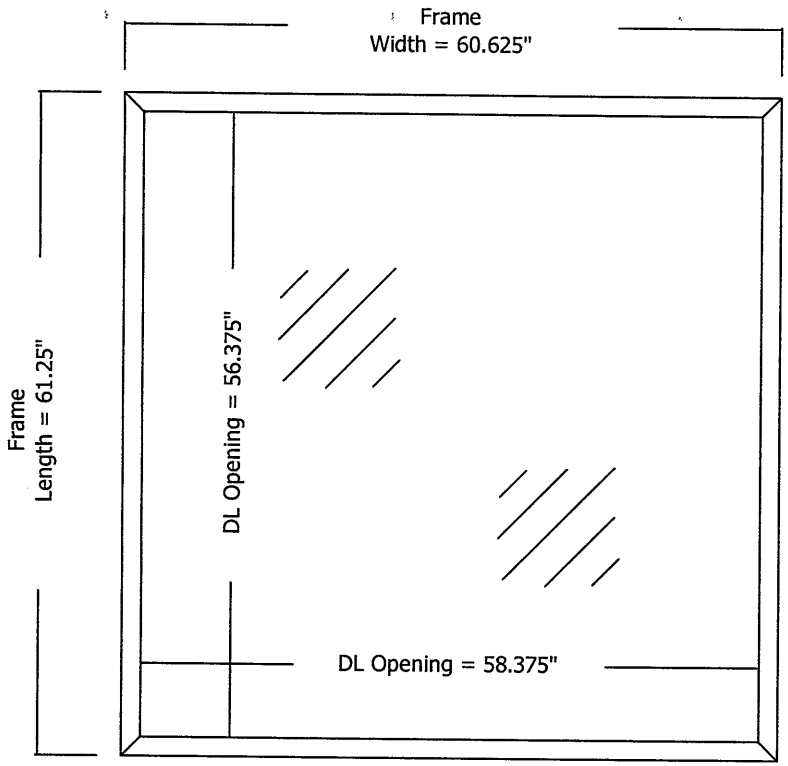

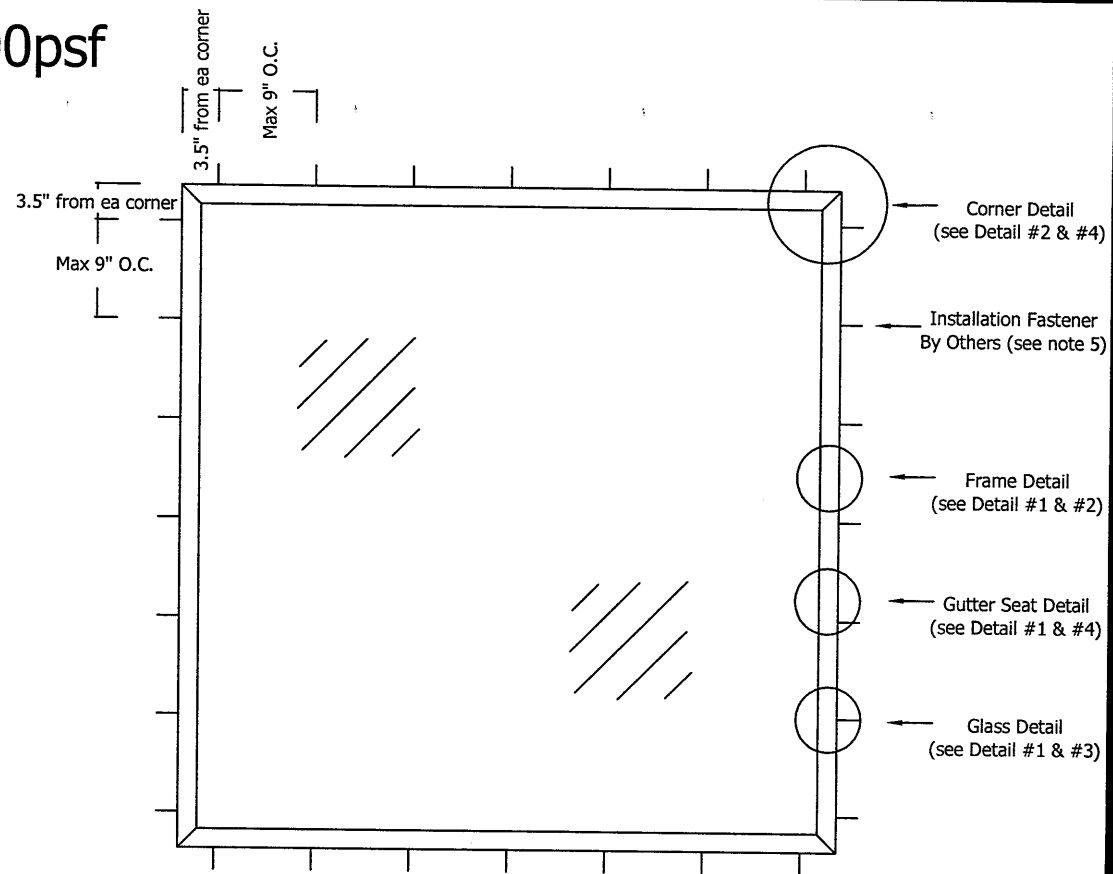

Notes:
1. This skylight is designed to comply with all zones, including the HVHZ, of the Florida Building Code.
2. This skylight meets small & large missle impact resistance (TAS-201/ASTM E1886/ASTM E1996) and no other protection is required.
3. All framing and roof deck is by others and must comply with the Florida Building Code.
4. All sizes equal to or less than the test size total square footage are to be accepted under this NOA.
5. Fasteners used to attach skylight to wood curb are to be minimum #12 X 1.5" stainless steel with minimum embedment of 1.25"

Bill of Materials:
1. 6063-T5 Extruded Aluminum Frame mitered and welded at four corners. Manufacturer - Maxim
2. 6063-T5 Extruded Aluminum Gutter mitered and welded at four corners. Manufacturer - Maxim
3. Dow Corning 795 Silicone Building Sealant located between aluminum frame and glass (glass bite) and glass and gutter. Manufacturer - Dow Corning
4. 7/8" Insulated glass with Sentry Glass interlayer: 1/8" Tempered - 3/8" stainless steel desicant filled tube (air space) - 2 pcs 1/8" annealed with .090" Sentry Glass interlayer. Manufacturer - DuPont
5. #12 X 1.5" Stainless steel fasteners 3.5" from each corner, maximum 9" on center with minimum embedment of 1.25".

RICHARD BOYETTE

PRODUCT RENEWED
as complying with the Florida Building Code
Acceptance No 12-1022.02
Expiration Date 01/10/2018
By
Miami Dade Product Control

FL PE # 42485
4031 COCONUT BLVD
ROYAL PALM BCH FL 33411
561-790-5766

APPROVED DEC 19 2012

MAXIM
HURRICANE RESISTANT
S K Y L I G H T S
1630 Terre Colony Court Dallas, Texas 75212
P: 888.222.4898 P: 214.905.2021 F: 214.905.2024
www.maximskylights.com

TITLE: MAXIM IMPACT GLASS CURB MOUNT SKYLIGHT
DRAWING NO.: MAX DGCM 07 DATE: 2012.12.12
DRAW BY: DJT REVISION: #2
SCALE: NTS
SHEET: 2 OF 2