DEPARTMENT OF REGULATORY AND ECONOMIC RESOURCES (RER)
BOARD AND CODE ADMINISTRATION DIVISION

MIAMI-DADE COUNTY
PRODUCT CONTROL SECTION
11805 SW 26 Street, Room 208
Miami, Florida 33175-2474
T (786) 315-2590 F (786) 315-2599
www.miamidade.gov/economy

NOTICE OF ACCEPTANCE (NOA)

Berridge Manufacturing Co.
1720 Maury
Houston, TX 77026-7199

SCOPE:

This NOA is being issued under the applicable rules and regulations governing the use of construction materials. The documentation submitted has been reviewed and accepted by Miami-Dade County RER - Product Control Section to be used in Miami Dade County and other areas where allowed by the Authority Having Jurisdiction (AHJ).

This NOA shall not be valid after the expiration date stated below. The Miami-Dade County Product Control Section (In Miami Dade County) and/or the AHJ (in areas other than Miami Dade County) reserve the right to have this product or material tested for quality assurance purposes. If this product or material fails to perform in the accepted manner, the manufacturer will incur the expense of such testing and the AHJ may immediately revoke, modify, or suspend the use of such product or material within their jurisdiction. RER reserves the right to revoke this acceptance, if it is determined by Miami-Dade County Product Control Section that this product or material fails to meet the requirements of the applicable building code.
This product is approved as described herein, and has been designed to comply with the Florida Building Code including the High Velocity Hurricane Zone of the Florida Building Code.

DESCRIPTION: Berridge Manufacturing Company Zee-Lock Panel with Continuous Clip

LABELING: Each unit shall bear a permanent label with the manufacturer's name or logo, city, state and following statement: "Miami-Dade County Product Control Approved", unless otherwise noted herein.

RENEWAL of this NOA shall be considered after a renewal application has been filed and there has been no change in the applicable building code negatively affecting the performance of this product.

TERMINATION of this NOA will occur after the expiration date or if there has been a revision or change in the materials, use, and/or manufacture of the product or process. Misuse of this NOA as an endorsement of any product, for sales, advertising or any other purposes shall automatically terminate this NOA. Failure to comply with any section of this NOA shall be cause for termination and removal of NOA.

ADVERTISEMENT: The NOA number preceded by the words Miami-Dade County, Florida, and followed by the expiration date may be displayed in advertising literature. If any portion of the NOA is displayed, then it shall be done in its entirety.

INSPECTION: A copy of this entire NOA shall be provided to the user by the manufacturer or its distributors and shall be available for inspection at the job site at the request of the Building Official.

This renews NOA# 11-0927.05 and consists of pages 1 through 6.
The submitted documentation was reviewed by Alex Tigera.

ROOFING ASSEMBLY APPROVAL:

Category:	Roofing
Sub-Category:	Non-Structural Metal Roofing
Material:	Steel
Deck Type:	Wood/Steel
Maximum Design Pressure	**-176 psf**

TRADE NAMES OF PRODUCTS MANUFACTURED OR LABELED BY APPLICANT:

Product	Dimensions	Test Specifications	Product Description
Berridge Zee-Lock Panel	L= various W = 16" Thickness 24ga. (.0245") Yield strength: 51.9ksi	TAS 125	G-90 galvanized curved panels coated with various approved coatings Fluropon, Kynar, or Hylar.
Berridge Curved Zee-Rib Clip	L= continuous W = 1-3/8" High = 2" Thickness. 24ga (.0245") Yield strength: 51.9ksi	TAS 125	G-90 galvanized curved clips coated with various approved coatings Fluropon, Kynar, or Hylar

MANUFACTURING LOCATION:

1. Houston, TX.
2. San Antonio, TX.
3. Sequin, TX.

EVIDENCE SUBMITTED:

Test Agency	Test Identifier	Test Name/Report	Date
Force Engineering & Testing, Inc.	49-0374T-08C	TAS-125	02/02/09
Force Engineering & Testing, Inc.	49-0395T-09C	TAS-125	05/04/10
Force Engineering & Testing, Inc.	49-0008T-07A-C	TAS-125	02/16/07
PRI Construction Materials	BMC-006-02-01	TAS-100	08/23/07
Valspar	Certified Laboratory Test Report	Physical Properties ASTM G 23	03/16/05
Valspar	Certified Laboratory Test Report	Physical Properties ASTM B 117	03/16/05

APPROVED ASSEMBLIES:

System A:	Berridge Zee-Lock 16" Wide Panel
Deck Type:	Wood, Non-insulated
Deck Description:	New Construction $^{19}/_{32}$" or greater plywood or wood plank, or for re-roofing $^{15}/_{32}$" or greater plywood.
Slope Range:	2": 12" or greater
Maximum Uplift Pressure:	**See Table A below**

Deck Attachment: In accordance with applicable building code, but in no case shall it be less than # 8d x 2" galvanized ring shank roofing nails spaced 6" o.c at the roof perimeter and field. In reroofing, where the deck is less than 19/32" thick (Minimum 15/32") The above attachment method must be in addition to existing attachment.

Underlayment: Minimum underlayment shall be an ASTM D 226 Type II installed with a minimum 4" side-lap and 6" end-laps. Underlayment shall be fastened with corrosion resistant tin-caps and 1 ¼" annular ring-shank nails, spaced 6" o.c. at all laps and two staggered rows 12" o.c. in the field of the roll, or any approved underlayment having a current NOA.

Apply a layer of GAF Materials Corporation Versashield (with current NOA) over the underlayment with 4" overlaps and 6" endlaps. GAF Materials Corporation Versashield (with current NOA) is to be tacked in place and held in position by the panel fastening.

Fire Barrier Board: Any approved fire barrier having a current NOA. Refer to a current fire directory listing for fire ratings of this roofing system assembly as well as the location of the fire barrier within the assembly. See Limitation # 1.

Valleys: Valley construction shall be in compliance Roofing Application Standard RAS 133 and with Berridge Manufacturing Company's current published installation instructions.

Metal Panels and Accessories: Install the Zee Lock Panels including flashings penetrations, valleys, and accessories in compliance with Berridge Manufacturing Company's current, published installation instructions and in compliance with the minimum requirements detailed in Roofing Application Standard RAS 133.

1. Each roof panel is attached to the plywood substrate along its male rib using the approved clips (continuous, 24-ga). Each clip is attached to the substrate with one (1) corrosion resistant Buildex #12-11Type A corrosion resistant screw of sufficient length to penetrate through the sheathing a minimum of 3/16" at a spacing listed in **Table A** below.
2. Attach adjacent panel by placing the female rib over the male rib and clip. Standing seams shall be mechanically seamed to a full 180^0 seam. (Double Lock)

TABLE A
MAXIMUM DESIGN PRESSURE

	Field	**Perimeter and Corner[1]**
Maximum Design Pressure	**-101 psf**	**-174.25 psf**
Maximum Fastener Spacing	**16" o.c.**	**8" o.c.**

1. Extrapolation shall not be allowed

System B:	Berridge Zee-Lock 16" Wide Panel
Deck Type:	22 ga. Steel, Insulated
Deck Description:	ASTM A 611 Grade C Type B Steel Deck.
Slope Range:	2": 12" or greater
Maximum Uplift Pressure:	**See Table B below**

Deck Attachment: Minimum 22 gage steel deck shall be secured 6" o.c. to structural supports spaced a maximum of 5 ft o.c. with **one (1)** #12-14 x 1" Hex Washer Head screws fastened at the bottom of each flute (6" o.c.). Deck sidelaps shall be fastened 12" o.c. with #14 x 7/8" Hex Washer Head stitch screws.

Insulation: Between 4" - 6" thick of an approved rigid board insulation with current NOA having a minimum 25psi compressive strength fastened with approved fasteners and plates. Fastening density shall be in compliance with applicable Building Code and Roofing Application Standard RAS 117

Underlayment: Minimum underlayment shall be an ASTM D 226 Type II installed with a minimum 4" side-lap and 6" end-laps. Underlayment shall be fastened with corrosion resistant tin-caps and 1 ¼" fasteners, spaced 6" o.c. at all laps and two staggered rows 12" o.c. in the field of the roll, or any approved underlayment having a current NOA.

Apply a layer of GAF Materials Corporation Versashield (with current NOA) over the underlayment with 4" overlaps and 6" endlaps. GAF Materials Corporation Versashield (with current NOA) is to be tacked in place and held in position by the panel fastening..

Fire Barrier Board: Any approved fire barrier having a current NOA. Refer to a current fire directory listing for fire ratings of this roofing system assembly as well as the location of the fire barrier within the assembly. See Limitation # 1.

Valleys: Valley construction shall be in compliance Roofing Application Standard RAS 133 and with Berridge Manufacturing Company's current published installation instructions.

Metal Panels and Accessories: Install the Zee Lock Panels including flashings penetrations, valleys, and accessories in compliance with Berridge Manufacturing Company's current, published installation instructions and in compliance with the minimum requirements detailed in Roofing Application Standard RAS 133.

1. Each roof panel is attached to the steel substrate along its male rib using the approved clips (continuous, 24-ga). Each clip is attached to the substrate with one (1) DP1 Concealor by TFC, #14-13 corrosion resistant screw of sufficient length to penetrate through the steel deck a minimum of 3/4" at a spacing listed in **Table B** below.
2. Attach adjacent panel by placing the female rib over the male rib and clip. Standing seams shall be mechanically seamed to a full 180^0 seam. (Double Lock)

TABLE B
MAXIMUM DESIGN PRESSURE

	Field	**Perimeter and Corner[1]**
Maximum Design Pressure	**-168.5 psf**	**-176 psf**
Maximum Fastener Spacing	**16" o.c.**	**8" o.c.**

1. Extrapolation shall not be allowed

SYSTEM LIMITATIONS

1. Fire classification is not part of this acceptance; refer to a current Approved Roofing Materials Directory for fire ratings of this product.
2. The maximum designed pressure listed herein shall be applicable to all roof pressure zones (i.e. field, perimeters, and corners). Neither rational analysis, nor extrapolation shall be permitted for enhanced fastening at enhanced pressure zones (i.e. perimeters, extended corners and corners).
3. Panels may be rolls formed in continuous lengths from eave to ridge. Maximum lengths shall be as described in Roofing Application Standard RAS 133
4. All panels shall be permanently labeled with the manufacturer's name and/or logo, and the following statement: "Miami-Dade County Product Control Approved" **or** with the Miami-Dade County Product Control Seal as seen below. All clips shall be permanently labeled with the manufacturer's name and/or logo, and/or model.

MIAMI-DADE COUNTY
APPROVED

5. All products listed herein shall have a quality assurance audit in accordance with the Florida Building Code and Rule 9N-3 of the Florida Administrative Code.
6. Minimum arch radius shall be 20ft. in diameter.

GENERAL LIMITATION

1. An original signed and sealed company letter from Berridge Manufacturing Co. is required, proving that the Zee-Lock Roof Panel System was purchased from Berridge Manufacturing Co. in order for this NOA to be valid on any job.

PROFILE DRAWING:

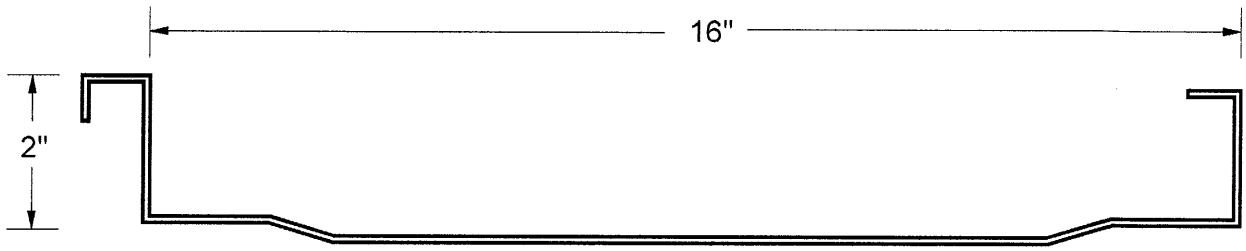

ZEE-LOCK PANELS

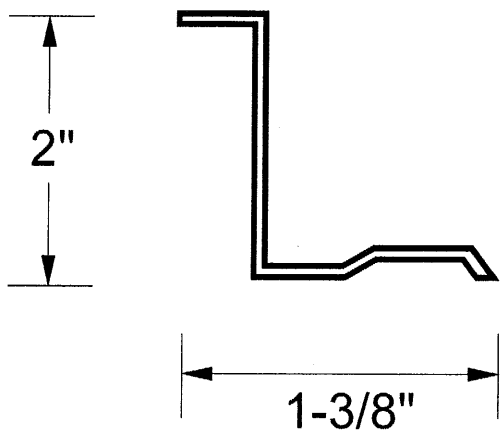

ZEE-RIB CLIP

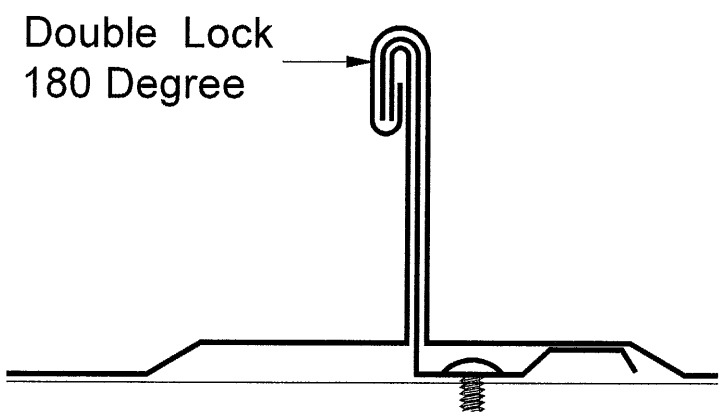

END OF THIS ACCEPTANCE