DEPARTMENT OF REGULATORY AND ECONOMIC RESOURCES (RER)
BOARD AND CODE ADMINISTRATION DIVISION

MIAMI-DADE COUNTY
PRODUCT CONTROL SECTION
11805 SW 26 Street, Room 208
Miami, Florida 33175-2474
T (786) 315-2590 F (786) 315-2599
www.miamidade.gov/economy

NOTICE OF ACCEPTANCE (NOA)

Advanced Roofing Assemblies, Inc.
1950 NW 22nd St
Ft. Lauderdale, FL. 33311

SCOPE:

This NOA is being issued under the applicable rules and regulations governing the use of construction materials. The documentation submitted has been reviewed and accepted by Miami-Dade County RER - Product Control Section to be used in Miami Dade County and other areas where allowed by the Authority Having Jurisdiction (AHJ).

This NOA shall not be valid after the expiration date stated below. The Miami-Dade County Product Control Section (In Miami Dade County) and/or the AHJ (in areas other than Miami Dade County) reserve the right to have this product or material tested for quality assurance purposes. If this product or material fails to perform in the accepted manner, the manufacturer will incur the expense of such testing and the AHJ may immediately revoke, modify, or suspend the use of such product or material within their jurisdiction. RER reserves the right to revoke this acceptance, if it is determined by Miami-Dade County Product Control Section that this product or material fails to meet the requirements of the applicable building code.
This product is approved as described herein, and has been designed to comply with the Florida Building Code including the High Velocity Hurricane Zone of the Florida Building Code.

DESCRIPTION: Englert Series 1300 Aluminum Metal Panel

LABELING: Each unit shall bear a permanent label with the manufacturer's name or logo, city, state and following statement: "Miami-Dade County Product Control Approved", unless otherwise noted herein.

RENEWAL of this NOA shall be considered after a renewal application has been filed and there has been no change in the applicable building code negatively affecting the performance of this product.

TERMINATION of this NOA will occur after the expiration date or if there has been a revision or change in the materials, use, and/or manufacture of the product or process. Misuse of this NOA as an endorsement of any product, for sales, advertising or any other purposes shall automatically terminate this NOA. Failure to comply with any section of this NOA shall be cause for termination and removal of NOA.

ADVERTISEMENT: The NOA number preceded by the words Miami-Dade County, Florida, and followed by the expiration date may be displayed in advertising literature. If any portion of the NOA is displayed, then it shall be done in its entirety.

INSPECTION: A copy of this entire NOA shall be provided to the user by the manufacturer or its distributors and shall be available for inspection at the job site at the request of the Building Official.

This NOA consists of pages 1 through 6.
The submitted documentation was reviewed by Alex Tigera.

6/23/15

MIAMI-DADE COUNTY APPROVED

ROOFING ASSEMBLY APPROVAL

Category:	Roofing
Sub-Category:	Metal, Panels (Non-Structural)
Material:	Aluminum
Deck Type:	Wood
Maximum Design Pressure	See Table A Below

TRADE NAMES OF PRODUCTS MANUFACTURED OR LABELED BY APPLICANT:

Product	Dimensions	Test Specifications	Product Description
Series 1300	l = various w = 16” Thickness = 0.032” Min. Yield Strength: 17 ksi	TAS 110 TAS 125	Aluminum, preformed, standing seam, coated panels.
Series 1300 Clip	l = 6-¼” w = 1-½” h = 1-$^{11}/_{16}$” Thickness Min. = 0.024”	TAS 114	Corrosion resistant, formed, steel clips for metal panel installation.
Trim Pieces	l = varies w = varies Thickness = 0.032”	TAS 110	Standard flashing and trim pieces. Manufactured for each panel width.

EVIDENCE SUBMITTED

Test Agency	Test Identifier	Test Name/Report	Date
Architectural Testing, Inc.	01-32797.01	TAS 100	11/05/98
	46064.01-122-18	TAS 125	07/21/11
Hurricane Test Laboratory, Inc.	0155 0404-04	TAS 125	5/21/04
BASF		ASTM G23 ASTM B117	11/15/04

APPROVED ASSEMBLIES:

System A-1:	Series 1300 Metal Roof Panels
Deck Type:	Wood, Non-Insulated
Deck Description:	New Construction $^{19}/_{32}$" or greater plywood or wood plank.
Slope Range:	2": 12" or greater
Maximum Uplift Pressure:	**See Table A below**

Deck Attachment: Deck shall be attached in accordance with applicable Building Code, but in no case shall it be less than 8d x 2-1/2" galvanized ring shank roofing nails spaced 6" o.c. at roof perimeter and field. In reroofing, where the deck is less than $^{19}/_{32}$" thick (Minimum $^{15}/_{32}$") the above attachment method must be in addition to existing attachment.

Underlayment: Minimum underlayment shall be an ASTM D 226 Type II installed with a minimum 4" side-lap and 6" end-laps. Underlayment shall be fastened with corrosion resistant 32 gauge tin-caps and 12 gauge 1-¼" annular galvanized ring-shank roofing nails, spaced 6" o.c. at all laps and two staggered rows 12" o.c. in the field of the roll. Or, any approved underlayment having a current NOA.

Fire Barrier Board: Any approved fire barrier having a current NOA. Refer to a current fire directory listing for fire ratings of this roofing system assembly as well as the location of the fire barrier within the assembly. See Limitation # 1.

Valleys: Valley construction shall be in compliance with Roofing Application Standard RAS 133 and with Englert's current published installation instructions.

Metal Panels and Accessories: Install the "Series 1300 Panel" and accessories in compliance with the current published installation instructions and details in Englert's Installation Manual. Flashings, penetrations, valley construction and other details shall be constructed in compliance with Roofing Application Standard RAS 133.

Each roof panel is attached to the plywood substrate along it's male rib using the approved clips (6-¼" long x 1-½ " wide x 1-$^{11}/_{16}$" tall) located 3" from each panel end and at a spacing as listed in **Table A** below. Each clip is attached to substrate with four (4) corrosion resistant #10 self tapping pan head screws of sufficient length to penetrate through the sheathing a minimum of 3/16".

Attach adjacent panel by placing the female rib over the male rib and clip. Standing seams shall be mechanically seamed to a full 180 degree seam, (double lock)

TABLE A
MAXIMUM DESIGN PRESSURES

Roof Areas	Field	Perimeter and Corner[1]
Maximum Design Pressures	**-55psf**	**-123.5psf**
Maximum Clip Spacing	**24" o.c.**	**8" o.c.**

1. Extrapolation shall not be allowed

SYSTEM LIMITATIONS

1. Fire classification is not part of this acceptance; refer to a current Approved Roofing Materials Directory for fire ratings of this product.
2. The maximum designed pressure listed herein shall be applicable to all roof pressure zones (i.e. field, perimeters, and corners). Neither rational analysis, nor extrapolation shall be permitted for enhanced fastening at enhanced pressure zones (i.e. perimeters, extended corners and corners).
3. Panels may be rolls formed in continuous lengths from eave to ridge. Maximum lengths shall be as described in Roofing Application Standard RAS 133
4. All panels shall be permanently labeled with the manufacturer's name and/or logo, and the following statement: "Miami-Dade County Product Control Approved" **or** with the Miami-Dade County Product Control Seal as seen below. All clips shall be permanently labeled with the manufacturer's name and/or logo, and/or model.

MIAMI-DADE COUNTY
APPROVED

5. All products listed herein shall have a quality assurance audit in accordance with the Florida Building Code and Rule 9N-3 of the Florida Administrative Code.
6. Panels may be jobsite roll formed with machine model #**040604** from Englert Inc

PROFILE DRAWINGS

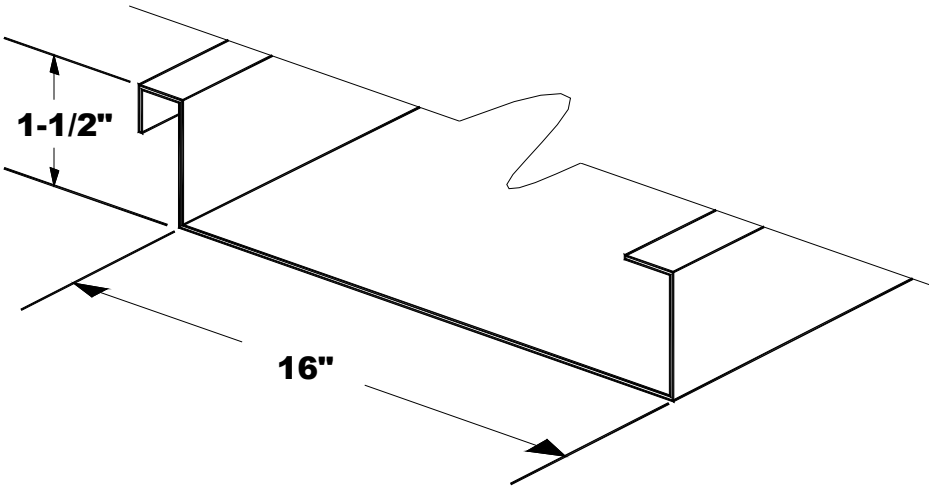

SERIES 1300 METAL PANEL

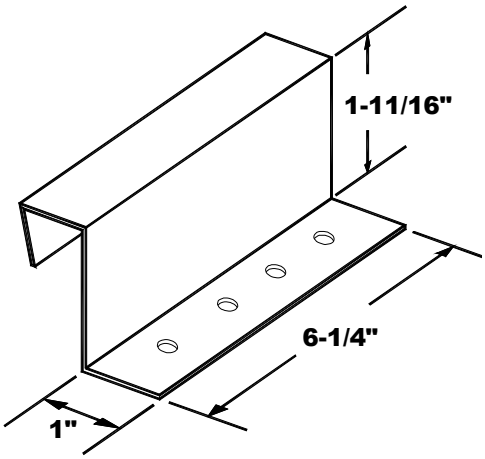

PANEL CLIP

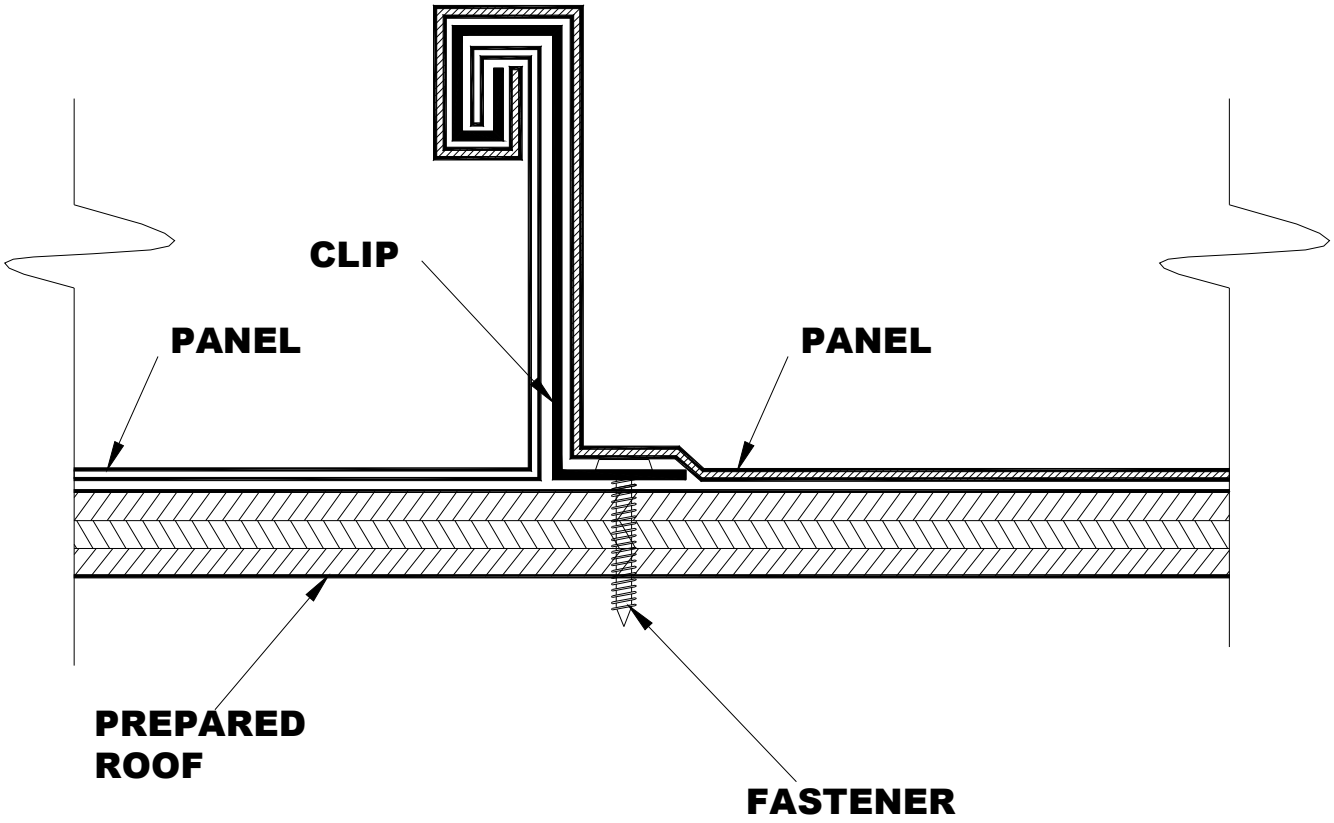

SERIES 1300 PANEL WITH CLIP AND FASTENER
AFTER SEAMING

END OF THIS ACCEPTANCE