MIAMI-DADE COUNTY
DEPARTMENT OF REGULATORY AND ECONOMIC RESOURCES (RER)
BOARD AND CODE ADMINISTRATION DIVISION

MIAMI-DADE COUNTY
PRODUCT CONTROL SECTION
11805 SW 26 Street, Room 208
T (786) 315-2590 F (786) 315-2599
www.miamidade.gov/economy

NOTICE OF ACCEPTANCE (NOA)

Sol–A–Trol Aluminum Products, Inc.
4101 N.W. 132nd Street
Miami, FL 33054

SCOPE:

This NOA is being issued under the applicable rules and regulations governing the use of construction materials. The documentation submitted has been reviewed and accepted by Miami-Dade County RER - Product Control Section to be used in Miami Dade County and other areas where allowed by the Authority Having Jurisdiction (AHJ).

This NOA shall not be valid after the expiration date stated below. The Miami-Dade County Product Control Section (In Miami Dade County) and/or the AHJ (in areas other than Miami Dade County) reserve the right to have this product or material tested for quality assurance purposes. If this product or material fails to perform in the accepted manner, the manufacturer will incur the expense of such testing and the AHJ may immediately revoke, modify, or suspend the use of such product or material within their jurisdiction. RER reserves the right to revoke this acceptance, if it is determined by Miami-Dade County Product Control Section that this product or material fails to meet the requirements of the applicable building code.

This product is approved as described herein, and has been designed to comply with the Florida Building Code, including the High Velocity Hurricane Zone.

DESCRIPTION: Series "3000/3062" Outswing Aluminum Casement Window – L.M.I.

APPROVAL DOCUMENT: Drawing No. **10–0920.15**, titled "Series 3000/3062 Alum. Out–Swing Casement Window (L.M.I.)", sheets 1 through 11 of 11, dated 08/16/10, with revision #2 dated 08/05/12, prepared by Stanton Engineering, Inc., signed and sealed by Christopher Stanton, P. E., bearing the Miami–Dade County Product Control Revision stamp with the Notice of Acceptance number and expiration date by the Miami–Dade County Product Control Section.

MISSILE IMPACT RATING: Large and Small Missile Impact Resistant.

LABELING: Each unit shall bear a permanent label with the manufacturer's name or logo, city, state, model/series, and following statement: "Miami-Dade County Product Control Approved", unless otherwise noted herein.

RENEWAL of this NOA shall be considered after a renewal application has been filed and there has been no change in the applicable building code negatively affecting the performance of this product.

TERMINATION of this NOA will occur after the expiration date or if there has been a revision or change in the materials, use, and/or manufacture of the product or process. Misuse of this NOA as an endorsement of any product, for sales, advertising or any other purposes shall automatically terminate this NOA. Failure to comply with any section of this NOA shall be cause for termination and removal of NOA.

ADVERTISEMENT: The NOA number preceded by the words Miami-Dade County, Florida, and followed by the expiration date may be displayed in advertising literature. If any portion of the NOA is displayed, then it shall be done in its entirety.

INSPECTION: A copy of this entire NOA shall be provided to the user by the manufacturer or its distributors and shall be available for inspection at the job site at the request of the Building Official.

This NOA **revises NOA# 10-0920.15** and consists of this page 1 and evidence pages E-1 and E-2 as well as approval document mentioned above.

The submitted documentation was reviewed by **Manuel Perez, P.E.**

MIAMI-DADE COUNTY APPROVED

1/17/13

Sol–A–Trol Aluminum Products, Inc.

NOTICE OF ACCEPTANCE: EVIDENCE SUBMITTED

A. DRAWINGS

1. Manufacturer's die drawings and sections.
2. Drawing No. **10–0920.15**, titled "Series 3000/ 3062 Alum. Out–Swing Casement Window (L.M.I.)", sheets 1 through 11 of 11, dated 08/16/10, with revision # 2 dated 08/05/12, prepared by Stanton Engineering, Inc., signed and sealed by Christopher Stanton, P.E.

B. TESTS

1. Test reports on: 1) Air Infiltration Test, per FBC, TAS 202–94
   2) Uniform Static Air Pressure Test, Loading per FBC, TAS 202–94
   3) Water Resistance Test, per FBC, TAS 202–94
   4) Forced Entry Resistant Test, per FBC and TAS 202–94

   along with marked–up drawings and installation diagram of an aluminum casement window, prepared by Hurricane Engineering and Testing, Inc., Test Report No. **HETI–09–2553**, dated 05/04/09, and addendum letter dated 12/03/10, all signed and sealed by Candido F. Font, P.E. ***(Submitted under previous NOA No.10–0920.15)***
2. Test reports on: 1) Large Missile Impact Test per FBC, TAS 201–94
   2) Cyclic Wind Pressure Loading per FBC, TAS 203–94

   along with marked–up drawings and installation diagram of an aluminum casement window, prepared by Hurricane Engineering and Testing Inc., Test Reports No.'s **HETI–08–2209A** and **HETI–08–2209B**, dated 11/10/08, and addendum letter dated 12/03/10, all signed and sealed by Candido F. Font, P.E.
   (Submitted under previous NOA No.10–0920.15)
3. Test reports on: 1) Air Infiltration Test, per FBC, TAS 202–94
   2) Uniform Static Air Pressure Test, Loading per FBC, TAS 202–94
   3) Water Resistance Test, per FBC, TAS 202–94
   4) Forced Entry Resistant Test, per FBC and TAS 202–94

   along with marked–up drawings and installation diagram of an aluminum casement window, prepared by Hurricane Engineering and Testing, Inc., Test Report No. **HETI–04–1409** and **HETI–04–1410**, dated 09/28/04 with revision 03/16/05, signed and sealed by Ivonne Ghia, P.E. ***(Submitted under previous NOA No.05–0414.02)***
4. Test reports on: 1) Large Missile Impact Test per FBC, TAS 201–94
   2) Cyclic Wind Pressure Loading per FBC, TAS 203–94

   along with marked–up drawings and installation diagram of an aluminum casement window, prepared by Hurricane Engineering and Testing Inc., Test Report No. **HETI–04–1918D**, dated 09/28/04 with revision 03/16/05, signed and sealed by Ivonne Ghia, P.E. ***(Submitted under previous NOA No.05–0414.02)***

Manuel Perez, P.E.
Product Control Examiner
NOA No. 12-1113.21
Expiration Date: November 03, 2015
Approval Date: January 24, 2013

B. TESTS (CONTINUED)

5. Test reports on: 1) Large Missile Impact Test per FBC, TAS 201-94
2) Cyclic Wind Pressure Loading per FBC, TAS 203-94
along with marked-up drawings and installation diagram of an aluminum casement window, prepared by Hurricane Engineering and Testing, Inc., Test Reports No. **HETI–04–1918A, HETI–04–1918C, HETI–04–1918E** and **HETI–04–1918B**, dated 09/28/04, signed and sealed by Ivonne Ghia, P.E.
(Submitted under previous NOA No.05–0414.02)

C. CALCULATIONS

1. Anchor verification calculations and structural analysis, complying with FBC–2007, prepared by Stanton Engineering, Inc., dated 08/25/10, signed and sealed by Christopher Stanton, P. E. ***(Submitted under previous NOA# 10-0920.15)***

2. Glazing complies with ASTM E1300-04

D. QUALITY ASSURANCE

1. Miami-Dade Department of Regulatory and Economic Resources (RER)

E. MATERIAL CERTIFICATIONS

1. Notice of Acceptance No. **11–0624.02** issued to **E.I. DuPont DeNemours & Co.**, Inc. for their "**DuPont SentryGlas® Interlayer**" dated 08/25/11, expiring on 01/14/17.

2. Notice of Acceptance No. **11–0624.01** issued to **E.I. DuPont DeNemours & Co., Inc.** for their **"DuPont Butacite® PVB Interlayer"** dated 09/08/11, expiring on 12/11/16.

3. Notice of Acceptance No. **11–1102.11** issued to **Solutia, Inc.** for their "**Saflex Clear and Color Glass Interlayers**" dated 06/14/12, expiring on 05/21/16.

F. STATEMENTS

1. Statement letter of conformance and compliance with the FBC 2010, dated August 06, 2012, signed and sealed by Christopher Stanton, P.E.

2. Statement letter of no financial interest, dated August 08, 2012, signed and sealed by Christopher Stanton, P.E.

3. Laboratory compliance letter for Test Reports No. **HETI–08–2209A, HETI–08–2209B** and **HETI–09–2553**, issued by Hurricane Engineering and Testing, Inc., dated 11/10/08 and 05/04/09, respectively, all signed and sealed by Candido F. Font, P.E.
(Submitted under previous NOA No.10–0920.15)

G. OTHER

1. Notice of Acceptance No. **10–0920.15**, issued to Sol–A–Trol Aluminum Products, Inc. for their Series "3000/3062", Outswing Aluminum Casement Window–L.M.I. approved on 01/20/11 and expiring on 11/03/15.

Manuel Perez, P.E.
Product Control Examiner
NOA No. 12-1113.21
Expiration Date: November 03, 2015
Approval Date: January 24, 2013

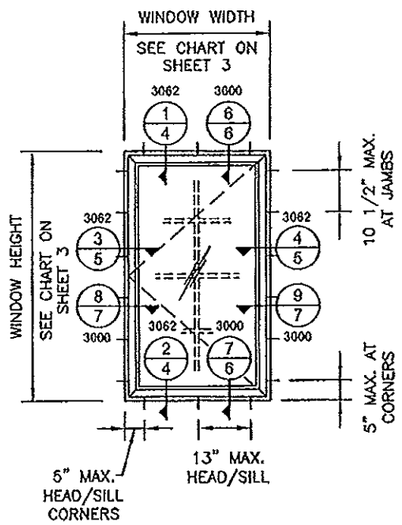

SINGLE VENT
TESTED SIZE
37" x 63" = 16.2 SQ. FT.
(MAXIMUM)

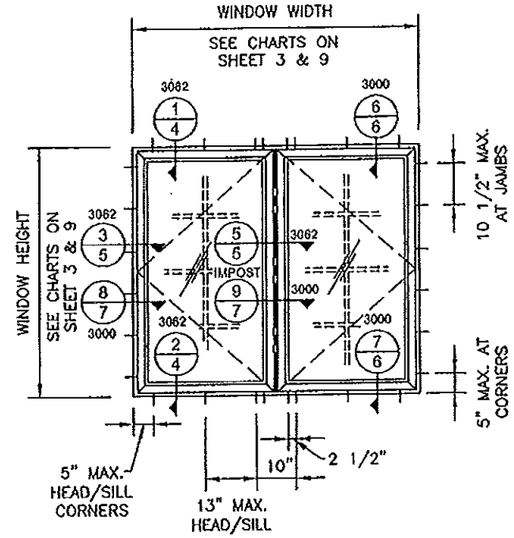

DUAL VENT
TESTED SIZE
72" x 63" = 31.5 SQ. FT.
(MAXIMUM)

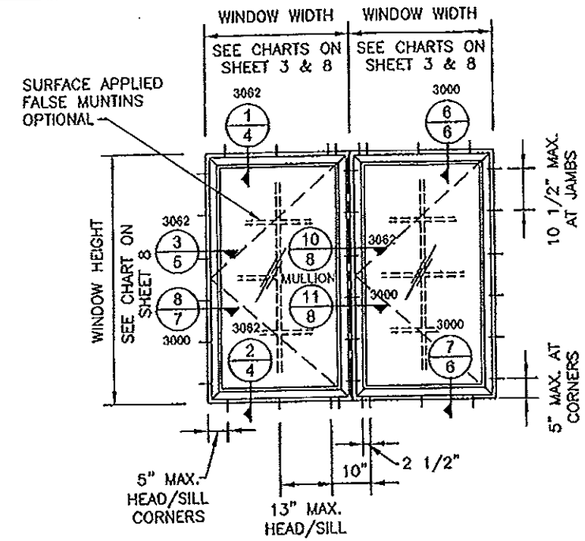

SIDE BY SIDE
TESTED SIZE
37" x 63" = 16.2 SQ. FT.
(MAXIMUM PER VENT)

SERIES 3000/3062 ALUM. CASEMENT WINDOW FLANGE OR EQUAL LEG FRAMES

DESIGN LOAD RATING FOR THESE WINDOWS SHALL BE AS PER CHARTS SHOWN ON SHEETS 3, 8 AND 9.

APPROVAL APPLIES TO SINGLE VENT WINDOWS OR DUAL VENT WINDOWS WITH INTEGRAL IMPOST,

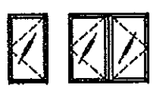

SIDE BY SIDE COMBINATIONS OF CASEMENT/CASEMENT OR CASEMENT/SERIES 3000/3062 FIXED WINDOWS USING MULLIONS IN BETWEEN

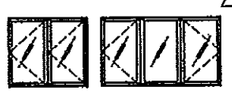

AND SERIES 3000 CASEMENT OVER SERIES 3000 PROJECT-OUT VENT OR SERIES 3000 PROJECT-OUT VENT OVER SERIES 3000 CASEMENT.

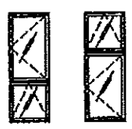

THIS SYSTEM IS RATED FOR LARGE MISSILE IMPACT. SHUTTERS ARE NOT REQUIRED.

2 THIS PRODUCT HAS BEEN DESIGNED AND TESTED TO COMPLY WITH THE REQUIREMENTS OF THE FLORIDA BUILDING CODE 2010 EDITION INCLUDING HIGH VELOCITY HURRICANE ZONE.

WOOD BUCKS, BY OTHERS, MUST BE ANCHORED PROPERLY TO TRANSFER LOADS TO THE STRUCTURE.

ANCHORS SHALL BE AS LISTED AND SHOWN ON THE DETAILS. ANCHOR EMBEDMENT TO BASE MATERIAL SHALL BE BEYOND WALL DRESSING OR STUCCO.

ANCHORING OR LOADING CONDITIONS NOT SHOWN IN THESE DETAILS ARE NOT PART OF THIS APPROVAL.

A 33% INCREASE IN ALLOWABLE STRESS HAS NOT BEEN USED.

ALL STEEL IN CONTACT WITH ALUMINUM TO BE PAINTED OR PLATED.

PROJECT-OUT VENT UNDER SEPARATE APPROVAL

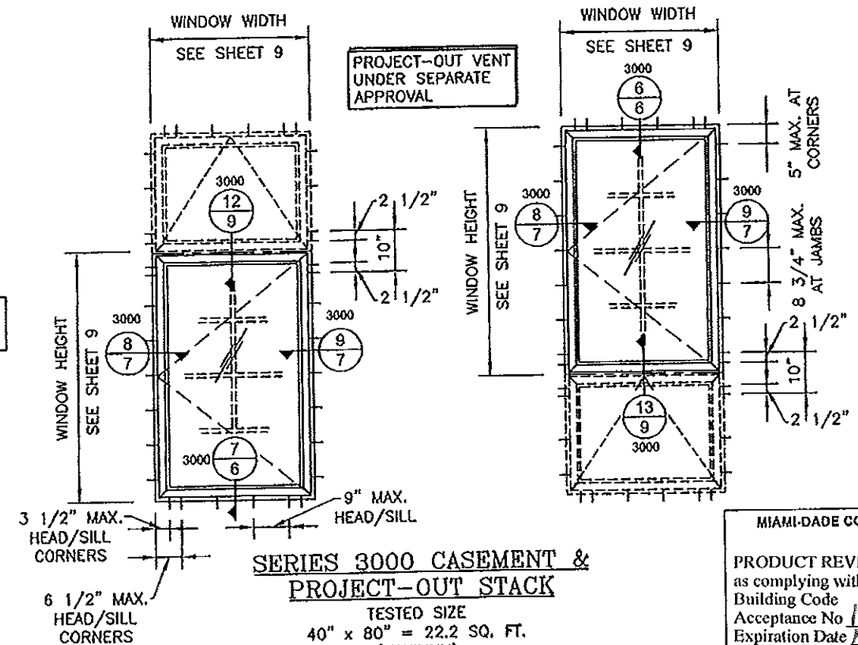

SERIES 3000 CASEMENT & PROJECT-OUT STACK
TESTED SIZE
40" x 80" = 22.2 SQ. FT.
(MAXIMUM)

NO.	DATE		REVISIONS
1	11-5-10		PER BCCO REVIEW
2	8-5-12		UPDATED TO 2010 FBC
3			
4			
5			

MIAMI-DADE COUNTY USE ONLY

PRODUCT REVISED
as complying with the Florida Building Code
Acceptance No 12-1113.21
Expiration Date Nov. 3, 2015
By Manuel Sanz
Miami Dade Product Control

SEAL
JAN 15 2013
CHRISTOPHER STANTON, P.E.
FL.A.P.E.: #69316

STANTON ENGINEERING, INC.
STRUCTURAL ENGINEERING SERVICES
2701 NW BOCA RATON BLVD. SUITE 115
BOCA RATON, FL 33431
TEL: (561) 393-1003 FAX: (561) 393-1008

SERIES 3000/3062 ALUM. OUT-SWING CASEMENT WINDOW (L.M.I.)

SOL-A-TROL aluminum products, inc.
4101 N.W. 132nd Street
Miami, Florida 33054
Phone: (305) 681-2020
Fax: (305) 681-2035

SCALE:	NOTED
DATE:	8/16/10
DRAWN BY:	OGI
CHECKED BY:	C.S.

10-0920.15
DRAWING NO.

SHEET NO.
1 of 11

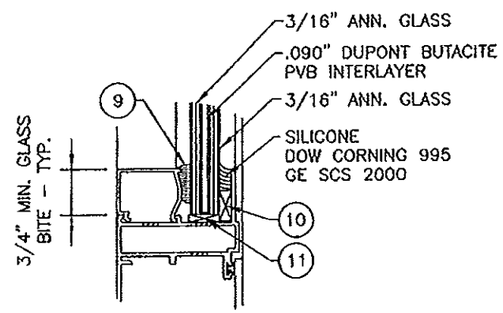

GLASS TYPE 'A'

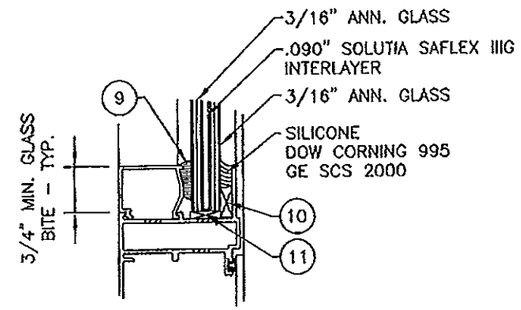

GLASS TYPE 'B'

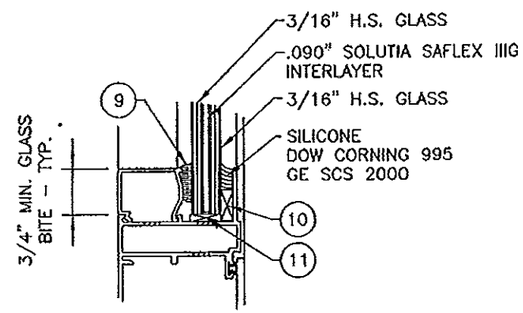

GLASS TYPE 'C'

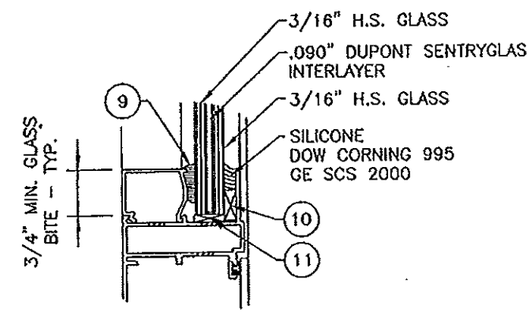

GLASS TYPE 'D'

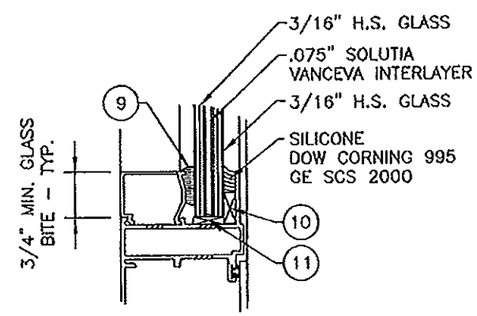

GLASS TYPE 'E'

NO.	DATE		REVISIONS
1	11-5-10		PER BCCO REVIEW
2	8-5-12		NO CHANGE THIS SHEET
3			
4			
5			

MIAMI-DADE COUNTY USE ONLY

PRODUCT REVISED
as complying with the Florida Building Code
Acceptance No 12-1113.2
Expiration Date Nov. 3, 2015
By [signature]
Miami Dade Product Control

SEAL:
LICENSE No. 69316
STATE OF FLORIDA
JAN 1 4 2013
CHRISTOPHER STANTON, P.E.
FLA P.E. # 69316

STANTON ENGINEERING, INC.
STRUCTURAL ENGINEERING SERVICES
2701 NW BOCA RATON BLVD. SUITE 115
BOCA RATON, FL 33431
TEL: (561) 393-1003 FAX: (561) 393-1008

SERIES 3000/3062 ALUM. OUT-SWING CASEMENT WINDOW (L.M.I.)

SOL-A-TROL aluminum products, Inc.
4101 N.W. 132nd Street
Miami, Florida 33054
Phone: (305) 681-2020
Fax: (305) 681-2035

SCALE: NOTED
DATE: 8/16/10
DRAWN BY: DGI
CHECKED BY: C.S.

10-0920.15
DRAWING NO.

SHEET NO.
2 of 11

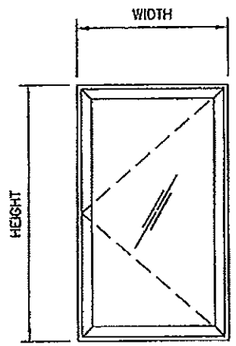

TYPICAL ELEVATION
"X" WINDOW

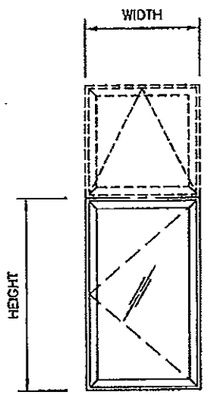

TYPICAL ELEVATION
PROJECT-OUT / SERIES 3000

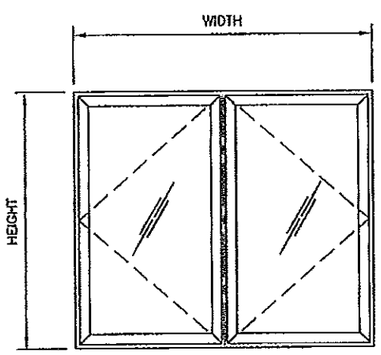

TYPICAL ELEVATION
"XX" WINDOW

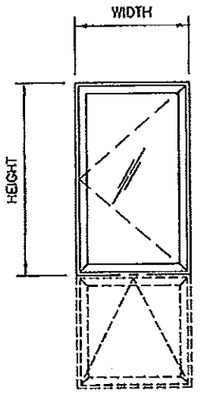

TYPICAL ELEVATION
SERIES 3000 / PROJECT-OUT

DESIGN LOAD CAPACITY - PSF FOR (X) SIZES

WINDOW DIMS.		SERIES 3062		SERIES 3000					
		GLASS TYPES 'A', 'B', 'C' OR 'D'		GLASS TYPES 'A', 'B' OR 'C'		GLASS TYPE 'D'		GLASS TYPE 'E'	
WIDTH	HEIGHT	EXT.(+)	INT.(-)	EXT.(+)	INT.(-)	EXT.(+)	INT.(-)	EXT.(+)	INT.(-)
19-1/8"	26" (3)	80.0	80.0	80.0	80.0	100.0	100.0	75.0	90.0
26-1/2"		80.0	80.0	80.0	80.0	100.0	100.0	75.0	90.0
37"		80.0	80.0	80.0	80.0	100.0	100.0	75.0	90.0
19-1/8"	38 3/8" (4)	80.0	80.0	80.0	80.0	100.0	100.0	75.0	90.0
26-1/2"		80.0	80.0	80.0	80.0	100.0	100.0	75.0	90.0
37"		80.0	80.0	80.0	80.0	100.0	100.0	75.0	90.0
19-1/8"	50 5/8" (5)	80.0	80.0	80.0	80.0	100.0	100.0	75.0	90.0
26-1/2"		80.0	80.0	80.0	80.0	100.0	100.0	75.0	90.0
37"		80.0	80.0	80.0	80.0	100.0	100.0	75.0	90.0
19-1/8"	63" (6)	80.0	80.0	80.0	80.0	100.0	100.0	75.0	90.0
26-1/2"		80.0	80.0	80.0	80.0	100.0	100.0	75.0	90.0
19-1/8"	74 1/4" (7)	80.0	80.0	80.0	80.0	100.0	100.0	75.0	90.0
26-1/2"		61.0	61.0	76.2	76.2	76.2	76.2	75.0	90.0
18"	24" (3)	80.0	80.0	80.0	80.0	100.0	100.0	75.0	90.0
24"		80.0	80.0	80.0	80.0	100.0	100.0	75.0	90.0
30"		80.0	80.0	80.0	80.0	100.0	100.0	75.0	90.0
36"		80.0	80.0	80.0	80.0	100.0	100.0	75.0	90.0
18"	36" (4)	80.0	80.0	80.0	80.0	100.0	100.0	75.0	90.0
24"		80.0	80.0	80.0	80.0	100.0	100.0	75.0	90.0
30"		80.0	80.0	80.0	80.0	100.0	100.0	75.0	90.0
36"		80.0	80.0	80.0	80.0	100.0	100.0	75.0	90.0
18"	48" (5)	80.0	80.0	80.0	80.0	100.0	100.0	75.0	90.0
24"		80.0	80.0	80.0	80.0	100.0	100.0	75.0	90.0
30"		80.0	80.0	80.0	80.0	100.0	100.0	75.0	90.0
36"		80.0	80.0	80.0	80.0	100.0	100.0	75.0	90.0
18"	60" (6)	80.0	80.0	80.0	80.0	100.0	100.0	75.0	90.0
24"		80.0	80.0	80.0	80.0	100.0	100.0	75.0	90.0
30"		80.0	80.0	80.0	80.0	100.0	100.0	75.0	90.0
36"		80.0	80.0	80.0	80.0	100.0	100.0	75.0	90.0
18"	63" (6)	80.0	80.0	80.0	80.0	100.0	100.0	75.0	90.0
24"		80.0	80.0	80.0	80.0	100.0	100.0	75.0	90.0
30"		80.0	80.0	80.0	80.0	100.0	100.0	75.0	90.0
36"		80.0	80.0	80.0	80.0	100.0	100.0	75.0	90.0
18"	72" (7)	80.0	80.0	80.0	80.0	100.0	100.0	75.0	90.0
24"		73.3	73.3	80.0	80.0	91.7	91.7	75.0	90.0
30"		60.2	60.2	67.02	67.02	75.3	75.3	75.0	90.0
18"	80" (9)	–	–	–	–	75.0	90.0	75.0	90.0
24"		–	–	–	–	75.0	90.0	75.0	90.0
30"		–	–	–	–	75.0	90.0	75.0	90.0
36"		–	–	–	–	75.0	90.0	75.0	90.0
40"		–	–	–	–	75.0	90.0	75.0	90.0

(#) = NO. OF ANCHORS PER JAMB

DESIGN LOAD CAPACITY - PSF FOR (XX) SIZES

WINDOW DIMS.		SERIES 3062		SERIES 3000					
		GLASS TYPES 'A', 'B', 'C' OR 'D'		GLASS TYPES 'A', 'B' OR 'C'		GLASS TYPE 'D'		GLASS TYPE 'E'	
WIDTH	HEIGHT	EXT.(+)	INT.(-)	EXT.(+)	INT.(-)	EXT.(+)	INT.(-)	EXT.(+)	INT.(-)
26-1/2"	26" (3)	80.0	80.0	80.0	80.0	100.0	100.0	75.0	90.0
37"		80.0	80.0	80.0	80.0	100.0	100.0	75.0	90.0
53 1/8"		80.0	80.0	80.0	80.0	100.0	100.0	75.0	90.0
74"		80.0	80.0	80.0	80.0	100.0	100.0	75.0	90.0
26-1/2"	38 3/8" (4)	80.0	80.0	80.0	80.0	100.0	100.0	75.0	90.0
37"		80.0	80.0	80.0	80.0	100.0	100.0	75.0	90.0
53 1/8"		80.0	80.0	80.0	80.0	100.0	100.0	75.0	90.0
74"		80.0	80.0	80.0	80.0	100.0	100.0	75.0	90.0
26-1/2"	50 5/8" (5)	80.0	80.0	80.0	80.0	100.0	100.0	75.0	90.0
37"		80.0	80.0	80.0	80.0	100.0	100.0	75.0	90.0
53 1/8"		80.0	80.0	80.0	80.0	100.0	100.0	75.0	90.0
74"		80.0	80.0	80.0	80.0	100.0	100.0	75.0	90.0
26-1/2"	63" (6)	80.0	80.0	80.0	80.0	100.0	100.0	75.0	90.0
37"		80.0	80.0	80.0	80.0	100.0	100.0	75.0	90.0
53 1/8"		80.0	80.0	80.0	80.0	100.0	100.0	75.0	90.0
24"	24" (3)	80.0	80.0	80.0	80.0	100.0	100.0	75.0	90.0
36"		80.0	80.0	80.0	80.0	100.0	100.0	75.0	90.0
48"		80.0	80.0	80.0	80.0	100.0	100.0	75.0	90.0
60"		80.0	80.0	80.0	80.0	100.0	100.0	75.0	90.0
72"		80.0	80.0	80.0	80.0	100.0	100.0	75.0	90.0
24"	36" (4)	80.0	80.0	80.0	80.0	100.0	100.0	75.0	90.0
36"		80.0	80.0	80.0	80.0	100.0	100.0	75.0	90.0
48"		80.0	80.0	80.0	80.0	100.0	100.0	75.0	90.0
60"		80.0	80.0	80.0	80.0	100.0	100.0	75.0	90.0
72"		80.0	80.0	80.0	80.0	100.0	100.0	75.0	90.0
24"	48" (5)	80.0	80.0	80.0	80.0	100.0	100.0	75.0	90.0
36"		80.0	80.0	80.0	80.0	100.0	100.0	75.0	90.0
48"		80.0	80.0	80.0	80.0	100.0	100.0	75.0	90.0
60"		80.0	80.0	80.0	80.0	100.0	100.0	75.0	90.0
72"		80.0	80.0	80.0	80.0	100.0	100.0	75.0	90.0
24"	60" (6)	80.0	80.0	80.0	80.0	100.0	100.0	75.0	90.0
36"		80.0	80.0	80.0	80.0	100.0	100.0	75.0	90.0
48"		80.0	80.0	80.0	80.0	100.0	100.0	75.0	90.0
60"		80.0	80.0	80.0	80.0	100.0	100.0	75.0	90.0
72"		80.0	80.0	80.0	80.0	100.0	100.0	75.0	90.0
24"	63" (6)	80.0	80.0	80.0	80.0	100.0	100.0	75.0	90.0
36"		80.0	80.0	80.0	80.0	100.0	100.0	75.0	90.0
48"		80.0	80.0	80.0	80.0	100.0	100.0	75.0	90.0
60"		80.0	80.0	80.0	80.0	100.0	100.0	75.0	90.0
72"		80.0	80.0	80.0	80.0	100.0	100.0	75.0	90.0

(#) = NO. OF ANCHORS PER JAMB

NOTE:
GLASS CAPACITIES ON THIS SHEET ARE BASED ON ASTM E1300-04

NO.	DATE		REVISIONS
1	11-5-10		PER BCCO REVIEW
2	8-5-12		NO CHANGE THIS SHEET
3			
4			
5			

MIAMI-DADE COUNTY USE ONLY

PRODUCT REVISED
as complying with the Florida Building Code
Acceptance No 12-1113.21
Expiration Date Nov. 3, 2015
By Manuel Sera
Miami Dade Product Control

SEAL:
STATE OF FLORIDA
CHRISTOPHER STANTON, P.E.
FLA.P.E. #69316
NOV 5 2012

STANTON ENGINEERING, INC.
STRUCTURAL ENGINEERING SERVICES
2701 NW BOCA RATON BLVD. SUITE 115
BOCA RATON, FL 33431
TEL: (561) 393-1003 FAX: (561) 393-1008

SERIES 3000/3062 ALUM. OUT-SWING CASEMENT WINDOW (L.M.I.)

SOL-A-TROL aluminum products, Inc.
4101 N.W. 132nd Street
Miami, Florida 33054
Phone: (305) 681-2020
Fax: (305) 681-2035

SCALE: NOTED
DATE: 8/18/10
DRAWN BY: DGI
CHECKED BY: C.S.

10-0920.15
DRAWING NO.

SHEET NO.
3 of 11

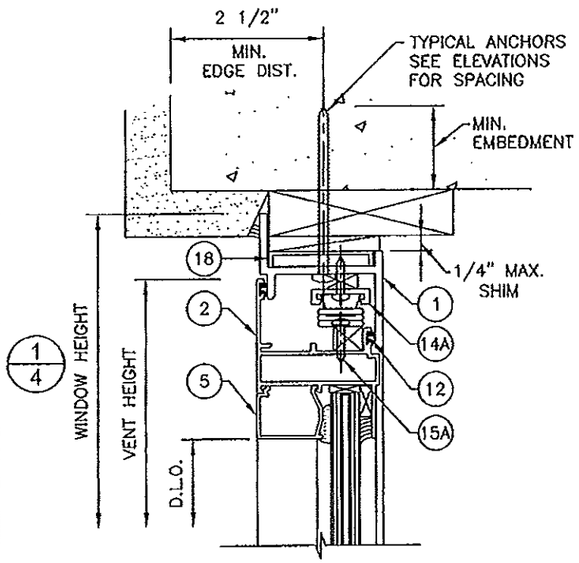

EXTERIOR

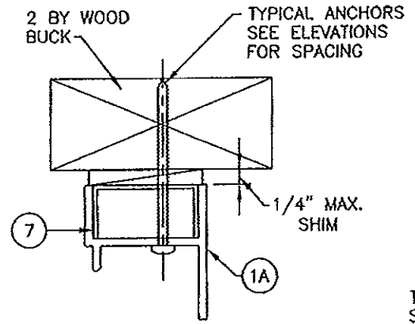

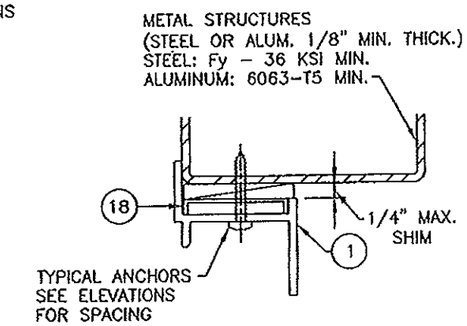

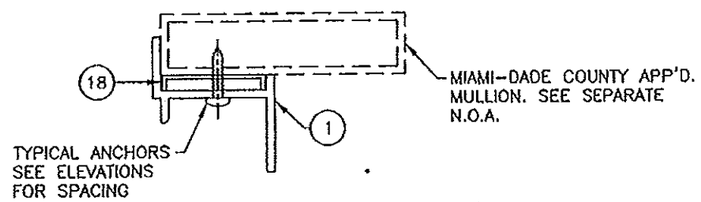

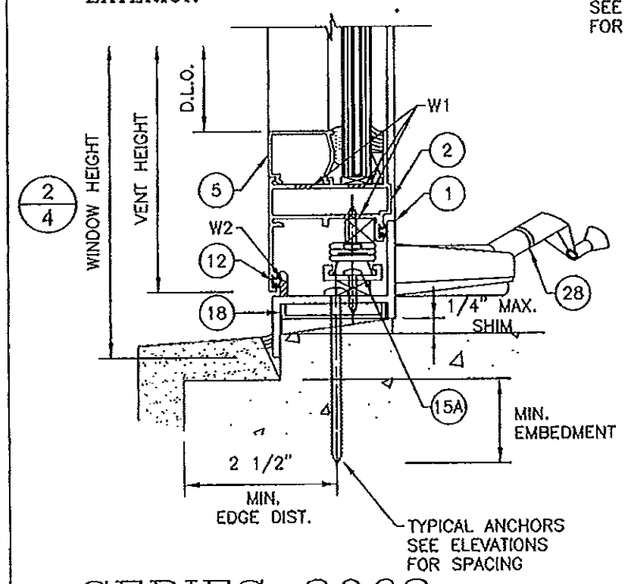

SERIES 3062

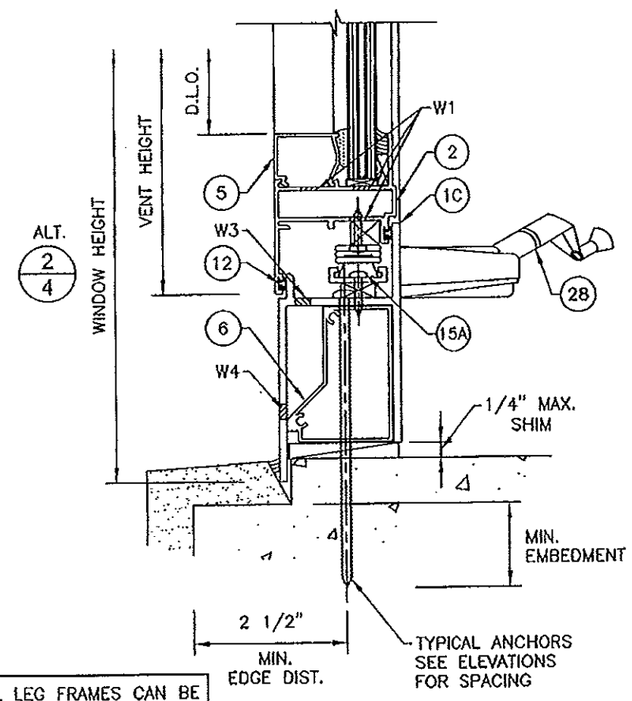

NO.	DATE		REVISIONS
1	11-5-10		PER BCCO REVIEW
2	8-5-12		NO CHANGE THIS SHEET
3			
4			
5			

FLANGE AND EQUAL LEG FRAMES CAN BE USED AT ALL ANCHORAGE CONDITIONS.

WOOD BUCKS NOT BY SOL-A-TROL MUST SUPPORT LOADS IMPOSED BY GLAZING SYSTEM AND TRANSFER THEM TO THE BUILDING STRUCTURE.

TYPICAL ANCHORS:

SEE ELEVATIONS FOR SPACING

TYPE "A"–1/4" TAPCONS

INTO 2BY WOOD BUCKS OR WOOD SUBSTRATES
1 1/2" MIN. PENETRATION INTO #2 SYP

THRU 1BY WOOD BUCKS INTO 3000 PSI MIN. CONC. OR C-90 GROUT FILLED BLOCK.
1 1/4" MIN. EMBED. INTO CONC. OR MASONRY

DIRECTLY INTO 3000 PSI MIN. CONCRETE OR C-90 GROUT FILLED BLOCK.
1 1/4" MIN. EMBED. INTO CONC. OR MASONRY

TYPE "B"–#14 WOOD SCREWS

INTO 2BY WOOD BUCKS OR WOOD SUBSTRATES
1 1/2" MIN. PENETRATION INTO #2 SYP

#14 SMS (MIN. GRADE 2 CRS) OR
1/4" HILTI KWIK-FLEX SELF DRILLING SCREWS

INTO METAL STRUCTURES
(STEEL OR ALUM. 1/8" MIN. THICK.)

STEEL: Fy – 36 KSI MIN.
ALUMINUM: 6063-T5 MIN.
(STEEL IN CONTACT WITH ALUM. TO BE PLATED OR PAINTED)

#12 SMS (MIN. GRADE 2 CRS)

INTO APPROVED MULLIONS (NO SHIM SPACE)

TYPICAL EDGE DISTANCE

INTO CONC. OR MASONRY = 2 1/2" MIN.
INTO WOOD STRUCTURE = 1" MIN.
INTO METAL STRUCTURE = 1" MIN.

SEALANTS:

ALL FRAME AND VENT CORNERS SEALED WITH JOINT SEALANT.

WEEP HOLES:

W1 = 1/4" DIA. WEEP HOLES AT 7" FROM EACH END
W2 = 1/4" x 3/8" WEEP SLOTS AT 7" FROM EACH END
W3 = 1/4" DIA. WEEP HOLE AT 6" FROM EACH END AND AT FRAME CENTERLINE
W4 = 3/16" x 1" WEEP SLOT AT 6" FROM EACH END AND AT FRAME CENTERLINE

MIAMI-DADE COUNTY USE ONLY

PRODUCT REVISED
as complying with the Florida Building Code
Acceptance No 12-1113.21
Expiration Date Nov. 3, 2015
By Manuel Sera
Miami Dade Product Control

SEAL
STATE OF FLORIDA
CHRISTOPHER STANTON, P.E.
FLA.P.E. #69316

STANTON ENGINEERING, INC.
STRUCTURAL ENGINEERING SERVICES
2701 NW BOCA RATON BLVD. SUITE 115
BOCA RATON, FL 33431
TEL: (561) 393-1003 FAX: (561) 393-1008

SERIES 3000/3062 ALUM. OUT-SWING CASEMENT WINDOW (L.M.I.)

SOL-A-TROL aluminum products, Inc.
4101 N.W. 132nd Street
Miami, Florida 33054
Phone: (305) 681-2020
Fax: (305) 681-2035

SCALE: NOTED
DATE: 8/16/10
DRAWN BY: DGI
CHECKED BY: C.S.

10-0920.15
DRAWING NO.

SHEET NO.
4 of 11

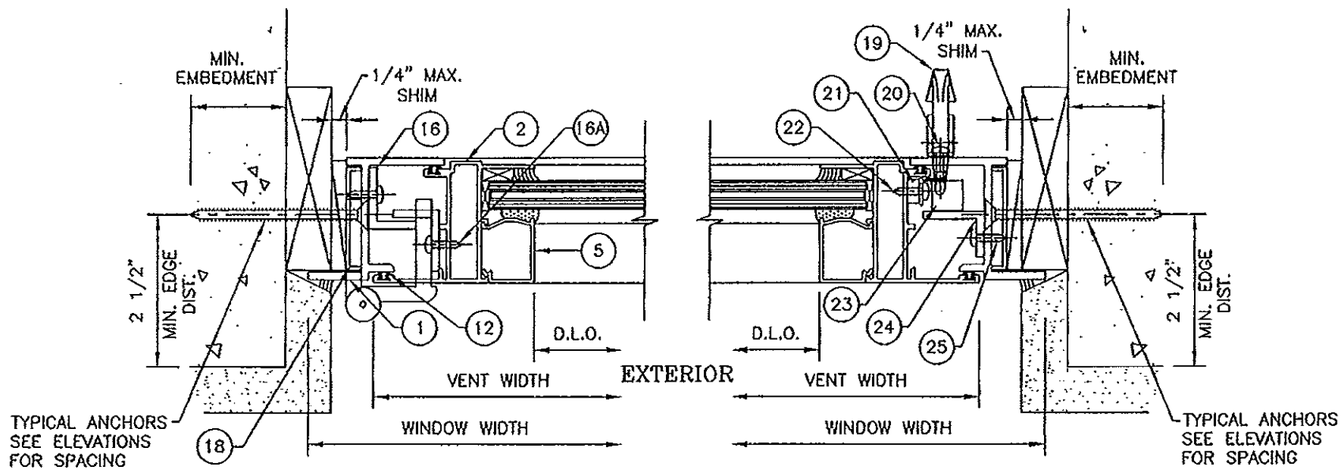

SINGLE VENT WINDOWS

3/5 4/5

METAL STRUCTURES
(STEEL OR ALUM. 1/8" MIN. THICK.)
STEEL: Fy – 36 KSI MIN.
ALUMINUM: 6063-T5 MIN.

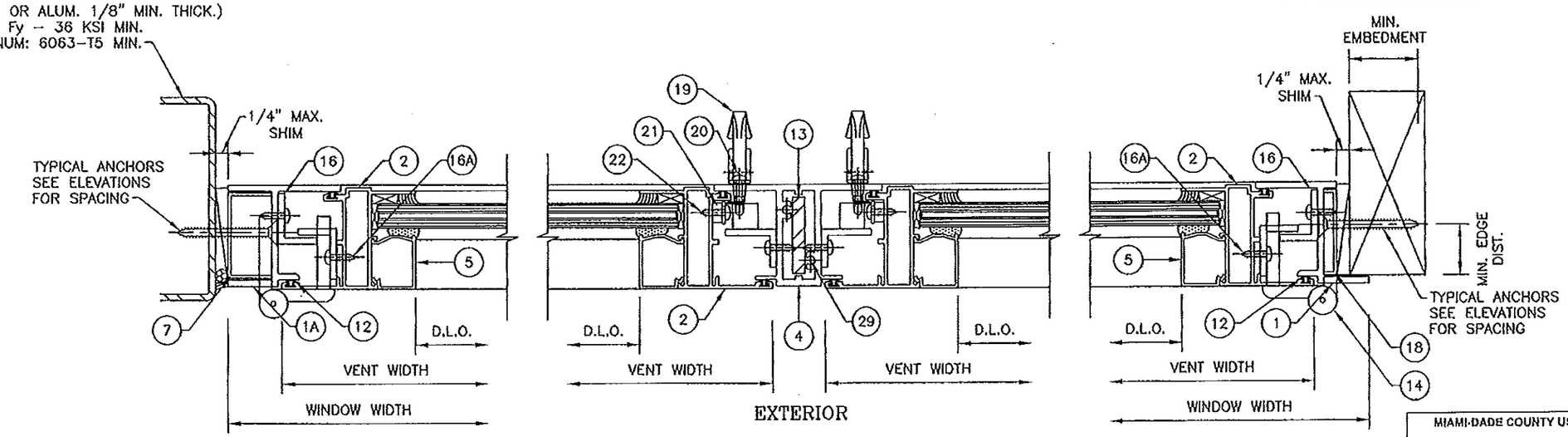

DUAL VENT WINDOWS

ALT. 3/5 5/5 ALT. 3/5

SERIES 3062

NO.	DATE		REVISIONS
1	11-5-10		PER BCCO REVIEW
2	8-5-12		NO CHANGE THIS SHEET
3			
4			
5			

HINGE OPTIONS:

OPTION 1: 4 BAR STAINLESS STEEL HINGE
PART #34-16 – 2 PER VENT
INSTALLED WITH (6) #10 x 3/4" PHMS PER HINGE

OPTION 2: 5-KNUCKLE ALUMINUM BUTT HINGE
PART #0170 – 2 PER VENT INSTALLED WITH (6) 1/4" x 3/4" PHSMS PER HINGE

LOCK OPTIONS:

OPTION 1: TWO POINT CONCEALED LOCK
PART #1735 INSTALLED WITH #10 x 1/2" PHSMS

OPTION 2: CAM LOCK AND KEEPER
PART #798L/799R AND 5824
2 PER VENT FOR WINDOWS UP TO 38 3/8" IN HEIGHT
3 PER VENT FOR WINDOWS ABOVE 38 3/8" IN HEIGHT.
INSTALLED WITH (2) #8 x 1/2" PHSMS PER LOCK

HINGES AND LOCKS CAN BE USED IN ANY COMBINATION

MIAMI-DADE COUNTY USE ONLY

PRODUCT REVISED
as complying with the Florida Building Code
Acceptance No 12-1113.21
Expiration Date Nov. 3, 2015
By Miami Dade Product Control

SEAL
JAN 1 6 2013
CHRISTOPHER STANTON, P.E.
FLA.P.E. # 69316

STANTON ENGINEERING, INC.
STRUCTURAL ENGINEERING SERVICES
2701 NW BOCA RATON BLVD. SUITE 115
BOCA RATON, FL 33431
TEL: (561) 393-1003 FAX: (561) 393-1008

SERIES 3000/3062 ALUM. OUT-SWING CASEMENT WINDOW (L.M.I.)

SOL-A-TROL
aluminum products, Inc.
4101 N.W. 132nd Street
Miami, Florida 33054
Phone: (305) 681-2020
Fax: (305) 681-2035

SCALE: NOTED
DATE: 8/16/10
DRAWN BY: DGI
CHECKED BY: C.S.

10-0920.15
DRAWING NO.

SHEET NO.
5 of 11

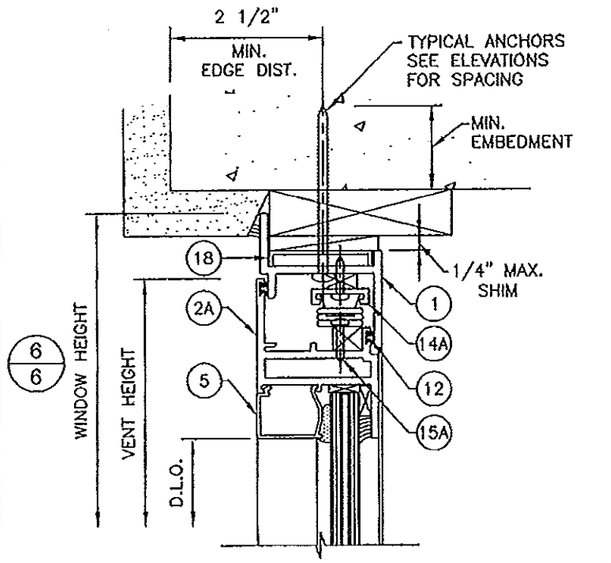

EXTERIOR

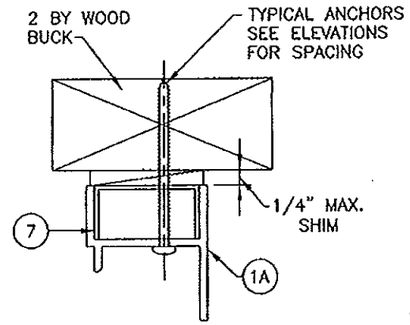

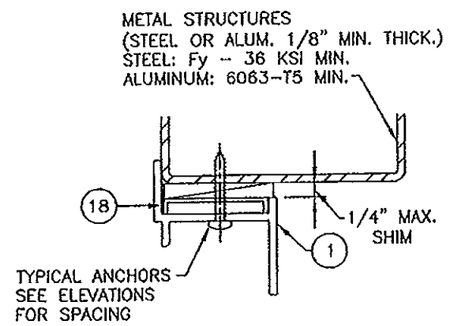

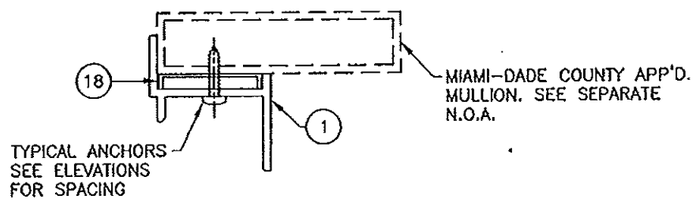

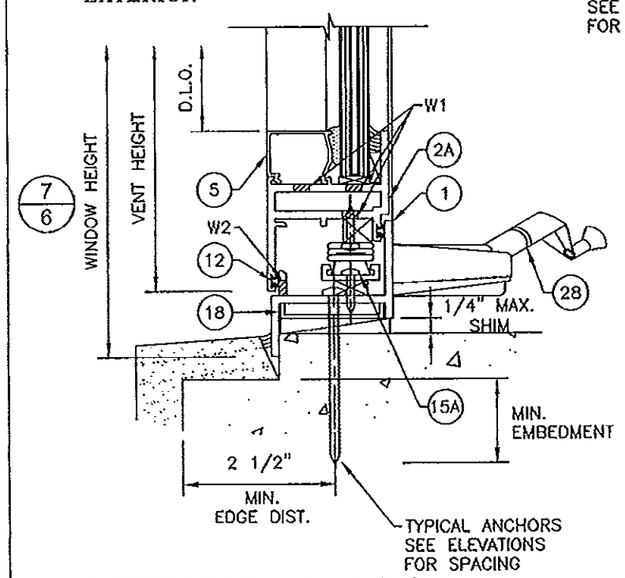

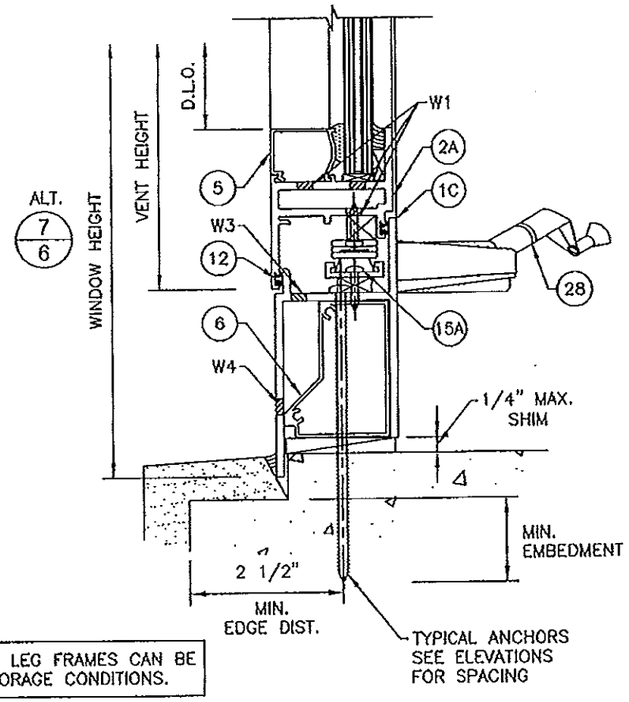

SERIES 3000

NO.	DATE		REVISIONS
1	11-5-10		PER BCCO REVIEW
2	8-5-12		NO CHANGE THIS SHEET
3			
4			
5			

FLANGE AND EQUAL LEG FRAMES CAN BE USED AT ALL ANCHORAGE CONDITIONS.

WOOD BUCKS NOT BY SOL-A-TROL MUST SUPPORT LOADS IMPOSED BY GLAZING SYSTEM AND TRANSFER THEM TO THE BUILDING STRUCTURE.

TYPICAL ANCHORS:

SEE ELEVATIONS FOR SPACING

TYPE "A"–1/4" TAPCONS

INTO 2BY WOOD BUCKS OR WOOD SUBSTRATES
1 1/2" MIN. PENETRATION INTO #2 SYP

THRU 1BY WOOD BUCKS INTO 3000 PSI MIN. CONC. OR C-90 GROUT FILLED BLOCK.
1 1/4" MIN. EMBED. INTO CONC. OR MASONRY

DIRECTLY INTO 3000 PSI MIN. CONCRETE OR C-90 GROUT FILLED BLOCK.
1 1/4" MIN. EMBED. INTO CONC. OR MASONRY

TYPE "B"–#14 WOOD SCREWS

INTO 2BY WOOD BUCKS OR WOOD SUBSTRATES
1 1/2" MIN. PENETRATION INTO #2 SYP

#14 SMS (MIN. GRADE 2 CRS) OR
1/4" HILTI KWIK-FLEX SELF DRILLING SCREWS

INTO METAL STRUCTURES
(STEEL OR ALUM. 1/8" MIN. THICK.)

STEEL: Fy – 36 KSI MIN.
ALUMINUM: 6063-T5 MIN.
(STEEL IN CONTACT WITH ALUM. TO BE PLATED OR PAINTED)

#12 SMS (MIN. GRADE 2 CRS)

INTO APPROVED MULLIONS (NO SHIM SPACE)

TYPICAL EDGE DISTANCE

INTO CONC. OR MASONRY = 2 1/2" MIN.
INTO WOOD STRUCTURE = 1" MIN.
INTO METAL STRUCTURE = 1" MIN.

SEALANTS:

ALL FRAME AND VENT CORNERS SEALED WITH JOINT SEALANT.

WEEP HOLES:

W1 = 1/4" DIA. WEEP HOLES AT 7" FROM EACH END
W2 = 1/4" x 3/8" WEEP SLOTS AT 7" FROM EACH END
W3 = 1/4" DIA. WEEP HOLE AT 6" FROM EACH END AND AT FRAME CENTERLINE
W4 = 3/16" x 1" WEEP SLOT AT 6" FROM EACH END AND AT FRAME CENTERLINE

MIAMI-DADE COUNTY USE ONLY

PRODUCT REVISED
as complying with the Florida Building Code
Acceptance No 12-1113.21
Expiration Date Nov. 3, 2015
By Manuel Sera
Miami Dade Product Control

SEAL: JAN 15 2013
CHRISTOPHER STANTON, P.E.
FLA P.E. # 59316

STANTON ENGINEERING, INC.
STRUCTURAL ENGINEERING SERVICES
2701 NW BOCA RATON BLVD. SUITE 115
BOCA RATON, FL 33431
TEL: (561) 393-1003 FAX: (561) 393-1008

SERIES 3000/3062 ALUM. OUT-SWING CASEMENT WINDOW (L.M.I.)

SOL-A-TROL aluminum products, inc.
4101 N.W. 132nd Street
Miami, Florida 33054
Phone: (305) 681-2020
Fax: (305) 681-2035

SCALE: NOTED
DATE: 8/16/10
DRAWN BY: DGI
CHECKED BY: C.S.

10-0920.15
DRAWING NO.

SHEET NO.
6 of 11

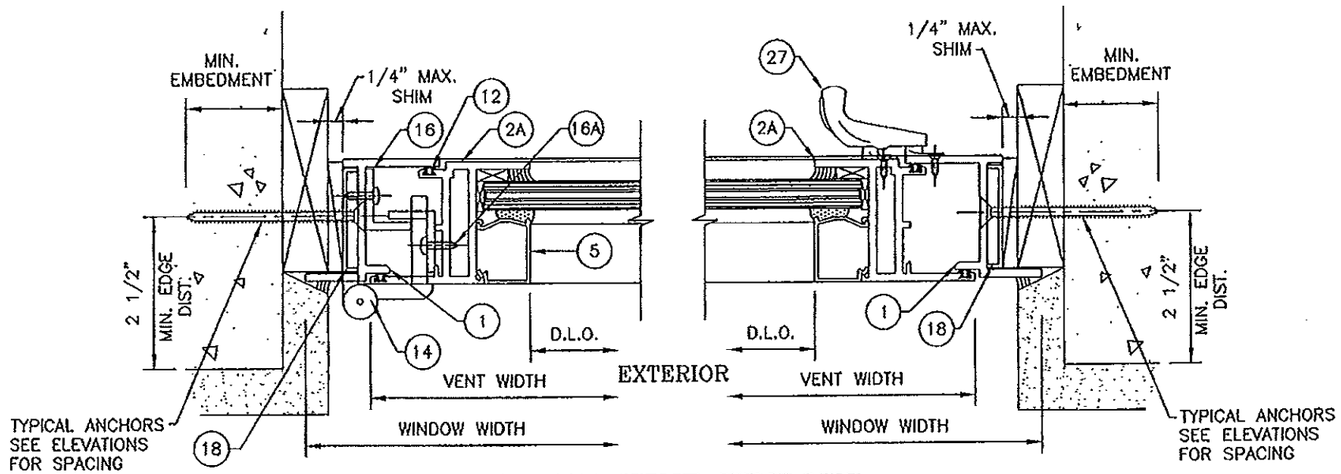

SINGLE VENT WINDOWS

8/7 9/7

METAL STRUCTURES
(STEEL OR ALUM. 1/8" MIN. THICK.)
STEEL: Fy – 36 KSI MIN.
ALUMINUM: 6063–T5 MIN.

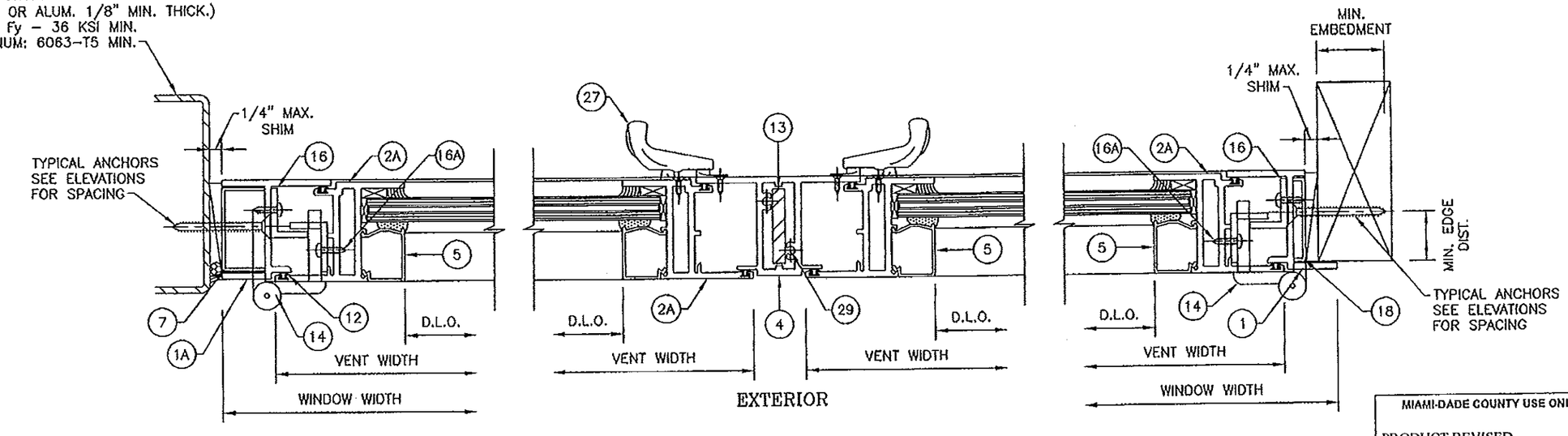

DUAL VENT WINDOWS

ALT. 8/7 9/7 ALT. 8/7

SERIES 3000

NO.	DATE		REVISIONS
1	11-5-10		PER BCCO REVIEW
2	8-5-12		NO CHANGE THIS SHEET
3			
4			
5			

HINGE:

5-KNUCKLE ALUMINUM BUTT HINGE
PART #0170 – 2 PER VENT INSTALLED
WITH (6) 1/4" x 3/4" PHSMS PER
HINGE

LOCKS:

CAM LOCK AND KEEPER
PART #798L/799R AND 5824
2 PER VENT FOR WINDOWS UP TO
38 3/8" IN HEIGHT
3 PER VENT FOR WINDOWS ABOVE
38 3/8" IN HEIGHT.
INSTALLED WITH (2) #8 x 1/2" PHSMS
PER LOCK

MIAMI-DADE COUNTY USE ONLY

PRODUCT REVISED
as complying with the Florida
Building Code
Acceptance No 12-1113.21
Expiration Date Nov. 3, 2015
By
Miami Dade Product Control

SEAL: STATE OF FLORIDA LICENSE No 69316 JAN 15 2013 CHRISTOPHER STANTON, P.E. FLA P.E. # 69316

STANTON ENGINEERING, INC.
STRUCTURAL ENGINEERING SERVICES
2701 NW BOCA RATON BLVD. SUITE 115
BOCA RATON, FL 33431
TEL: (561) 393-1003 FAX: (561) 393-1008

SERIES 3000/3062 ALUM. OUT-SWING CASEMENT WINDOW (L.M.I.)

SOL-A-TROL aluminum products, inc.
4101 N.W. 132nd Street
Miami, Florida 33054
Phone: (305) 681-2020
Fax: (305) 681-2035

SCALE: NOTED
DATE: 8/18/10
DRAWN BY: DGI
CHECKED BY: C.S.

10-0920.15
DRAWING NO.

SHEET NO.
7 of 11

MULLION & CONNECTION LOAD CAPACITY – PSF					
WINDOW DIMS.		SERIES 3062		SERIES 3000	
WIDTH (W)	LENGTH (L)	EXT.(+)	INT.(–)	EXT.(+)	INT.(–)
19–1/8"	26"	80.0	80.0	100.0	100.0
26–1/2"		80.0	80.0	100.0	100.0
37"		80.0	80.0	100.0	100.0
53–1/8"		80.0	80.0	100.0	100.0
19–1/8"	38 3/8"	80.0	80.0	100.0	100.0
26–1/2"		80.0	80.0	100.0	100.0
37"		80.0	80.0	100.0	100.0
53–1/8"		80.0	80.0	100.0	100.0
19–1/8"	50 5/8"	80.0	80.0	100.0	100.0
26–1/2"		80.0	80.0	100.0	100.0
37"		80.0	80.0	100.0	100.0
19–1/8"	63"	80.0	80.0	100.0	100.0
26–1/2"		80.0	80.0	100.0	100.0
37"		80.0	80.0	100.0	100.0
24"	36"	80.0	80.0	100.0	100.0
30"		80.0	80.0	100.0	100.0
36"		80.0	80.0	100.0	100.0
24"	42"	80.0	80.0	100.0	100.0
30"		80.0	80.0	100.0	100.0
36"		80.0	80.0	100.0	100.0
24"	48"	80.0	80.0	100.0	100.0
30"		80.0	80.0	100.0	100.0
36"		80.0	80.0	100.0	100.0
24"	54"	80.0	80.0	100.0	100.0
30"		80.0	80.0	100.0	100.0
36"		80.0	80.0	100.0	100.0
24"	60"	80.0	80.0	100.0	100.0
30"		80.0	80.0	100.0	100.0
36"		80.0	80.0	100.0	100.0

NOTES:

1. USE CHART ON THIS SHEET FOR SIDE BY SIDE WINDOW CONNECTION AND MULLION CAPACITY.
2. FOR CASEMENT WINDOW CAPACITY, SEE SHEET 3 OF 11
3. LOWER VALUES FROM STEPS 1 OF 2 WILL APPLY TO ENTIRE SYSTEM.

NO.	DATE		REVISIONS
1	11-5-10		PER BCCO REVIEW
2	8-5-12		NO CHANGE THIS SHEET
3			
4			
5			

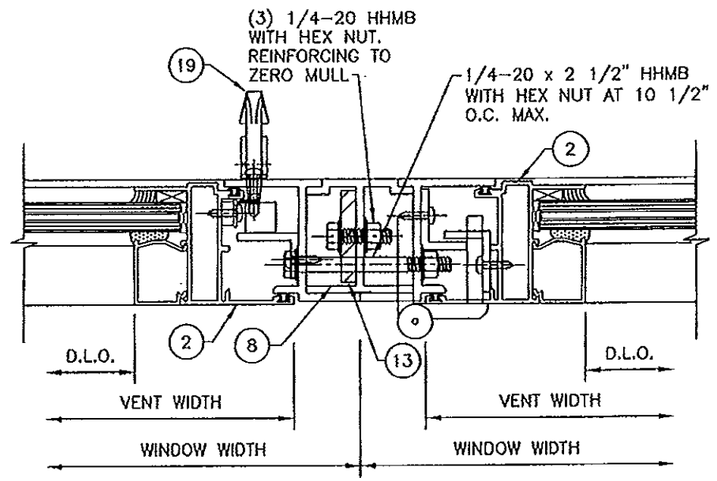

10/8 SERIES 3062 MULLION

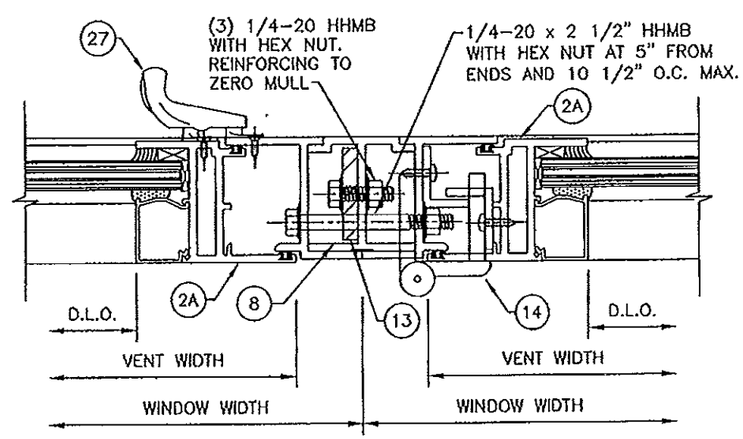

11/8 SERIES 3000 MULLION

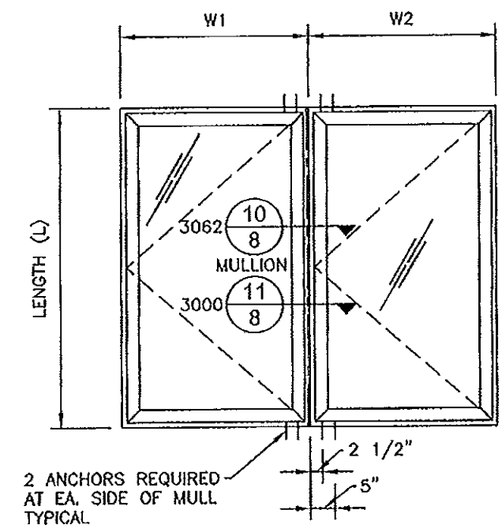

TYPICAL ELEVATION
SIDE BY SIDE WINDOWS
SIDE BY SIDE APPLIES TO 2 OR MORE WINDOWS

$$\text{WIDTH (W)} = \frac{W1 + W2}{2}$$

MIAMI-DADE COUNTY USE ONLY

PRODUCT REVISED
as complying with the Florida Building Code
Acceptance No 12-1113.21
Expiration Date Nov. 3, 2015
By Manuel Perez
Miami Dade Product Control

SEAL
CHRISTOPHER STANTON, P.E.
FLA.P.E. #69316

STANTON ENGINEERING, INC.
STRUCTURAL ENGINEERING SERVICES
2701 NW BOCA RATON BLVD. SUITE 115
BOCA RATON, FL 33431
TEL: (561) 393-1003 FAX: (561) 393-1008

SERIES 3000/3062 ALUM. OUT-SWING CASEMENT WINDOW (L.M.I.)

SOL–A–TROL aluminum products, Inc.
4101 N.W. 132nd Street
Miami, Florida 33054
Phone: (305) 681-2020
Fax: (305) 681-2035

SCALE: NOTED
DATE: 8/16/10
DRAWN BY: DGI
CHECKED BY: C.S.

10-0920.15
DRAWING NO.

SHEET NO.
8 of 11

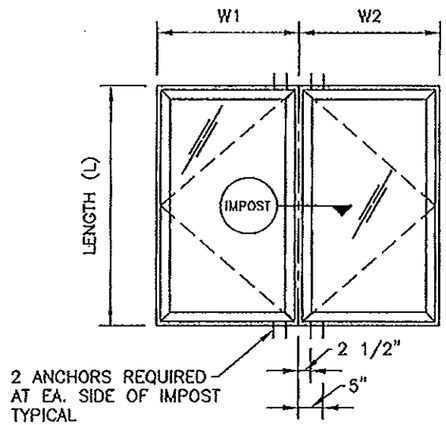

$\frac{W1 + W2}{2}$ = 37" (MAX.)

(L)= 63" (MAX.)

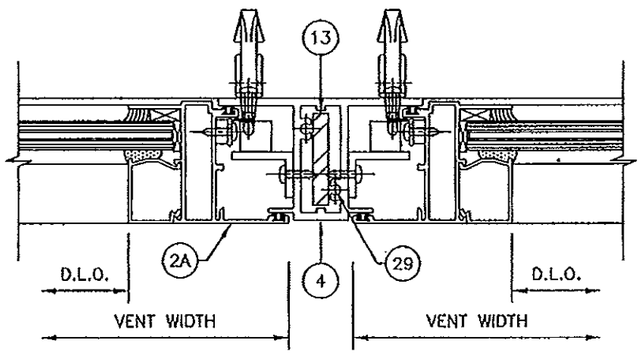

EXTERIOR

SERIES 3062 IMPOST

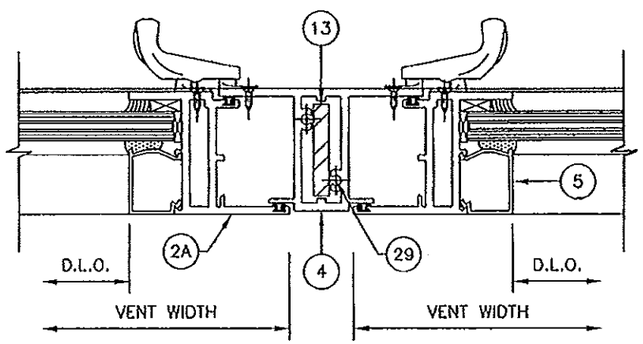

EXTERIOR

SERIES 3000 IMPOST

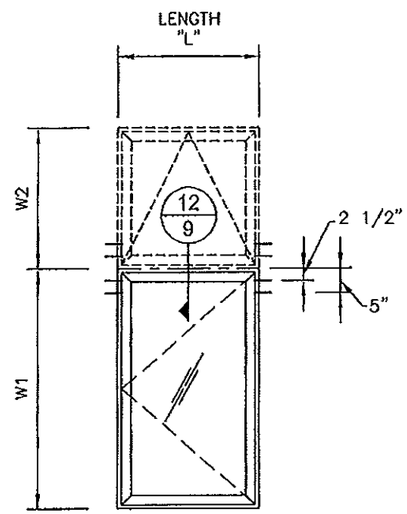

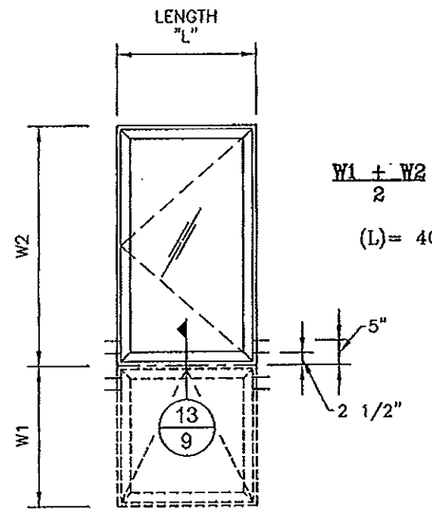

$\frac{W1 + W2}{2}$ = 60" (MAX.)

(L)= 40" (MAX.)

SERIES 3000
HORIZONTAL IMPOST

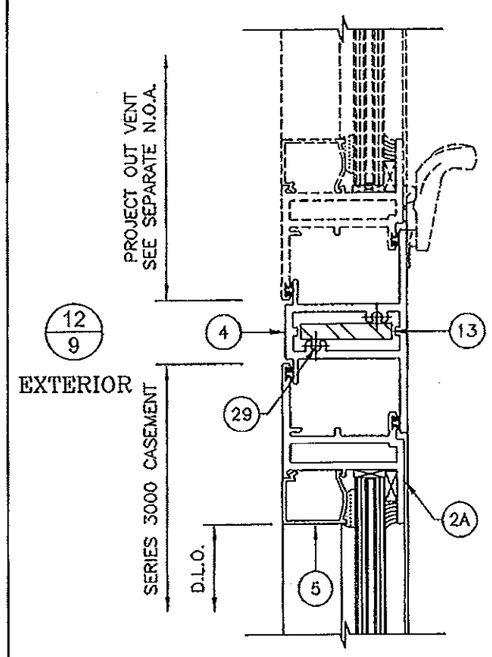

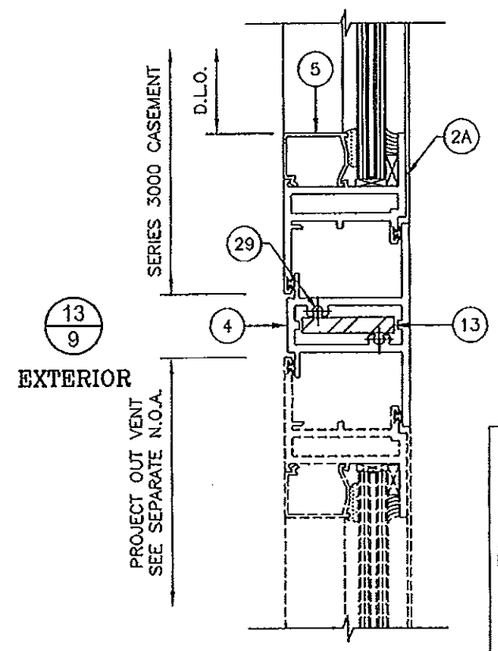

NO.	DATE		REVISIONS
1	11-5-10		PER BCCO REVIEW
2	8-5-12		NO CHANGE THIS SHEET
3			
4			
5			

MIAMI-DADE COUNTY USE ONLY

PRODUCT REVISED
as complying with the Florida Building Code
Acceptance No 12-1113.21
Expiration Date Nov. 3, 2015
By Manuel Lopez
Miami Dade Product Control

SEAL
NO. 60015
STATE OF FLORIDA
JAN 2013
CHRISTOPHER STANTON, P.E.
FLA P.E. # 69318

STANTON ENGINEERING, INC.
STRUCTURAL ENGINEERING SERVICES
2701 NW BOCA RATON BLVD. SUITE 115
BOCA RATON, FL 33431
TEL: (561) 393-1003 FAX: (561) 393-1008

SERIES 3000/3062 ALUM. OUT-SWING CASEMENT WINDOW (L.M.I.)

SOL-A-TROL aluminum products, Inc.
4101 N.W. 132nd Street
Miami, Florida 33054
Phone: (305) 681-2020
Fax: (305) 681-2035

SCALE:	NOTED
DATE:	8/18/10
DRAWN BY:	DGI
CHECKED BY:	C.S.

10-0920.15
DRAWING NO.

SHEET NO.
9 of 11

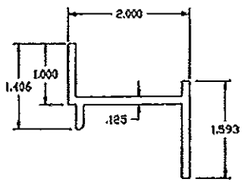

1 FLANGE FRAME
HEAD/JAMB/SILL

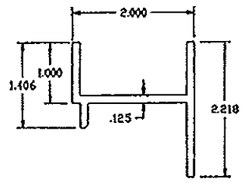

1A EQUAL LEG FRAME
HEAD/JAMB/SILL

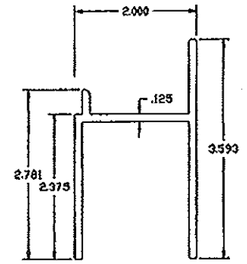

1B EQUAL LEG FRAME
HWR SILL

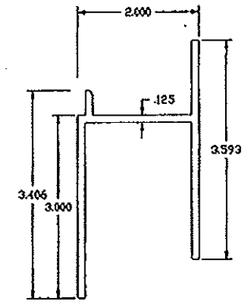

1C FLANGE FRAME
HWR SILL

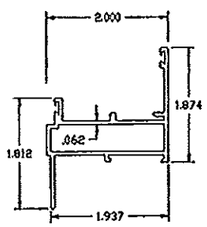

2 VENT
SERIES 3062

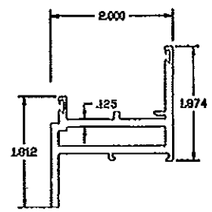

2A VENT
SERIES 3000

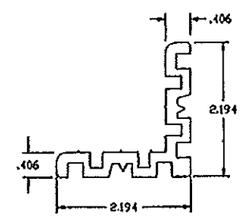

3 VENT CORNER KEY
SERIES 3062

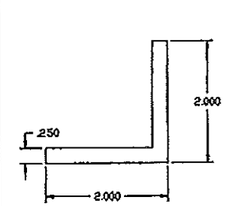

3A VENT CORNER KEY
SERIES 3000

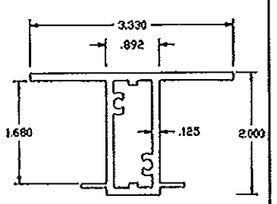

4 IMPOST

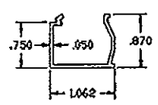

5 GLAZING BEAD

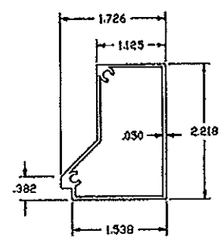

6 SILL TUBE

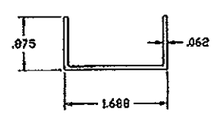

7 EQUAL LEG FRAME
SUPPORT CHANNEL

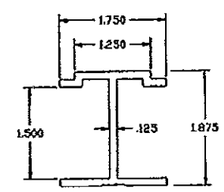

8 ZERO MULLION

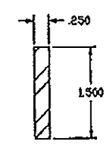

13 IMPOST/MULLION
REINFORCING

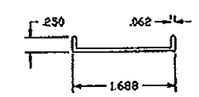

18 FLANGE FRAME
SUPPORT CHANNEL

BILL OF MATERIALS

ITEM	PART #	QUANTITY	DESCRIPTION	MATERIAL	MANF./SUPPLIER/REMARKS
1	ARSO-127	4	FLANGE FRAME (HEAD/JAMB/SILL)	6063-T5	SOL-A-TROL
1A	ARSO-142	4	EQUAL LEG FRAME (HEAD/JAMB/SILL)	6063-T5	SOL-A-TROL
1B	ARSO-314	1	EQUAL LEG FRAME (HWR SILL)	6063-T5	SOL-A-TROL
1C	ARSO-315	1	FLANGE FRAME FRAME (HWR SILL)	6063-T5	SOL-A-TROL
2	ARSO-176	4	VENT (SERIES 3062)	6063-T5	SOL-A-TROL
2A	ARSO-105	4	VENT (SERIES 3000)	6063-T5	SOL-A-TROL
3	ARSO-173	1/CORNER	VENT CORNER KEY (SERIES 3062)	6063-T5	SOL-A-TROL
3A	2" x 2" x 1/4" ANGLE	1/CORNER	VENT CORNER KEY (SERIES 3000)	6063-T5	SOL-A-TROL
4	ARSO-184	AS REQ'D.	IMPOST	6063-T5	SOL-A-TROL
5	ARSO-169	4	GLAZING BEAD	6063-T5	SOL-A-TROL
6	ARSO-313	AS REQ'D.	SILL TUBE	6063-T5	SOL-A-TROL
7	ARSO-978	AS REQ'D.	SUPPORT CHANNEL, 3" LONG	3003-H14	SOL-A-TROL
8	ARSO-168	AS REQ'D.	ZERO MULLION	6063-T5	SOL-A-TROL
9	FP-40	AS REQ'D.	GLAZING WEDGE	VINYL	PROTOTYPE PLASTICS (70-75 DURO)
10	328-RP-1428	2/VENT	SETTING BLOCK (1/2" x 1/4" x FULL LENGTH)	PVC	PROTOTYPE PLASTICS (78 DURO)
11	328-FP-8088	2/LITE	SETTING BLOCK (1/2" x 1/8" x 2") @ 1/4 POINTS	PVC	PROTOTYPE PLASTICS (70-75 DURO)
12	328-FP-261AB	AS REQ'D.	BULB WEATHER STRIPPING	VINYL	PROTOTYPE PLASTICS (60 DURO)
13	-	AS REQ'D.	MULLION/IMPOST REINFORCING	STEEL	-
14	0170	2/VENT	5 KNUCKLE BUTT HINGE - P.N. 90-1690	ALUMINUM	WORLD INDUSTRIAL PRODUCTS
14A	34-18	2/VENT	4-BAR HINGE - P.N. 201-SS	ST. STEEL	ULSH HARDWARE ENTERPRISES
15	#14 x 3/4"	6/HINGE	BUTT HINGE INSTALLATION SCREWS	ST. STEEL	PHSMS
15A	#10 x 3/4"	6/HINGE	4-BAR HINGE INSTALLATION SCREWS	ST. STEEL	PH MS
16	-	6/VENT	SNUBBER ANGLE 3/4" x 1" x 1/8" x 7 3/4" LONG	6063-T5	SOL-A-TROL
17	#10 x 1/2"	2/ANGLE	SNUBBER ANGLE INSTALLATION SCREWS	-	PHSMS
18	ARSO-977	AS REQ'D.	ALUMINUM CHANNEL	3003-H14	3" LONG
19	1735	1/VENT	2-POINT CONCEALED LOCK	BRONZE	MELRON CORP. / FRESH LINK
20	#10 x 1/2"	4/VENT	LOCK INSTALLATION SCREWS	ST. STEEL	PHSMS
21	SM-SSK1	4/VENT	KEEPER	ST. STEEL	SOL-A-TROL
22	#10 x 5/8"	4/VENT	KEEPER INSTALLATION SCREWS	ST. STEEL	PHSMS
23	1/2" x 1/2"	1/VENT	35 11/16" LONG LOCKING BAR	6063-T5	SOL-A-TROL
24	5/8" x 3/4"	2/VENT	ALUMINUM ANGLE - 2" LONG, 1/8" THICK	6063-T5	-
25	#10 x 1/2"	4/VENT	ANGLE INSTALLATION SCREWS	ST. STEEL	PHSMS
26	-	-	-	-	-
27	798L/799R & 5824	AS REQ'D.	CAM LOCK & KEEPER @ CENTER & 8 3/4" FROM ENDS	BRONZE	MELRON CORP. / FRESH LINK
28	105	OPTIONAL	CRANK OPERATOR	ZINC	SOUTHERN DIE CASTING
29	#10 x 1 1/2"	2/CORNER	IMPOST ASSEMBLY SCREWS	-	PHSMS

SEAL:

JAN 15 2013

CHRISTOPHER STANTON, P.E.
FLA P.E. #69318

STANTON ENGINEERING, INC.
STRUCTURAL ENGINEERING SERVICES
2701 NW BOCA RATON BLVD. SUITE 115
BOCA RATON, FL 33431
TEL: (561) 393-1003 FAX: (561) 393-1008

SERIES 3000/3062 ALUM. OUT-SWING
CASEMENT WINDOW (L.M.I.)

SOL-A-TROL
aluminum products, Inc.
4101 N.W. 132nd Street
Miami, Florida 33054
Phone: (305) 681-2020
Fax: (305) 681-2035

SCALE:	NOTED
DATE:	8/16/10
DRAWN BY:	DGI
CHECKED BY:	C.S.

10-0920.15
DRAWING NO.

SHEET NO.
10 of 11

NO.	DATE		REVISIONS
1	11-5-10		PER BCCO REVIEW
2	8-5-12		NO CHANGE THIS SHEET
3			
4			
5			

MIAMI-DADE COUNTY USE ONLY

PRODUCT REVISED
as complying with the Florida
Building Code
Acceptance No 12-1113.21
Expiration Date Nov. 3, 2015
By Maurice Perez
Miami Dade Product Control

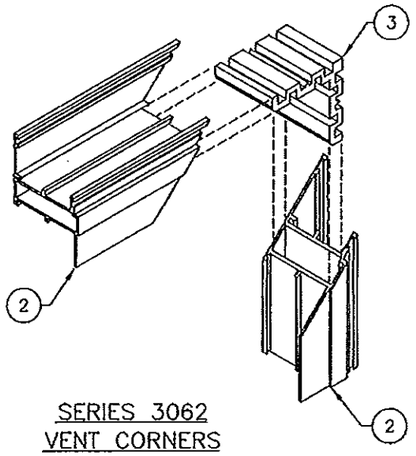

SERIES 3062
VENT CORNERS
MITERED & WELDED

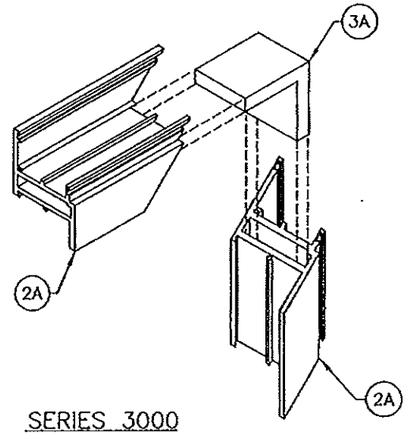

SERIES 3000
VENT CORNERS
MITERED & WELDED

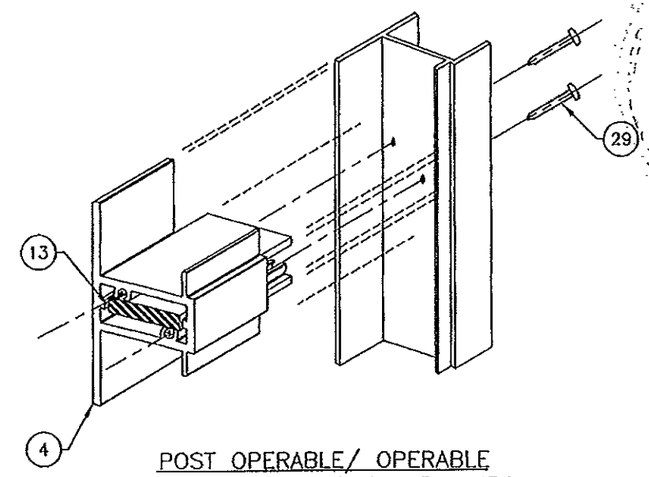

POST OPERABLE/ OPERABLE
NOTCHED & SCREWED AT JAMBS

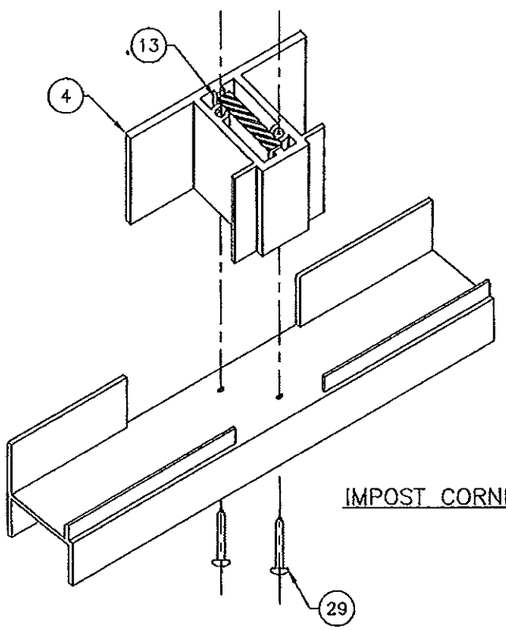

IMPOST CORNERS

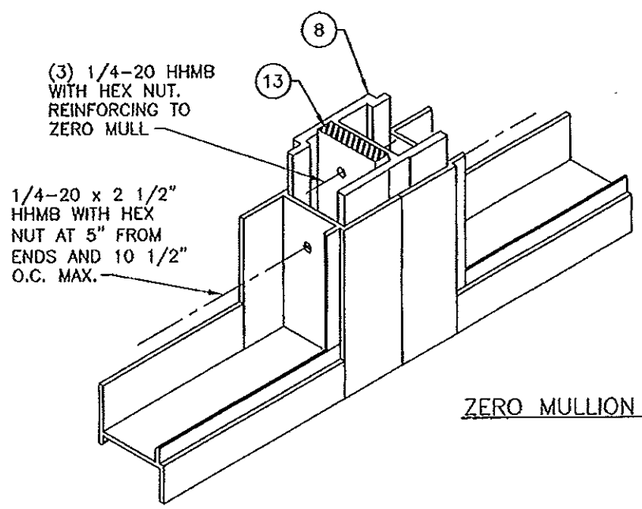

ZERO MULLION CORNERS

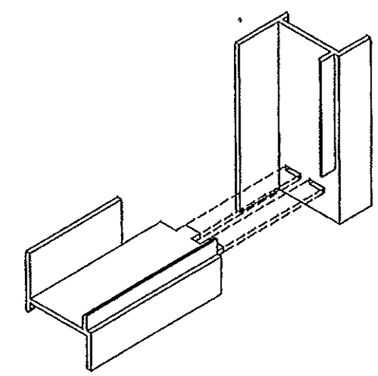

FRAME CORNERS
STAKED MORTISE AND TENDON FABRICATION

NO.	DATE		REVISIONS
1	11-5-10		PER BCCO REVIEW
2	8-5-12		NO CHANGE THIS SHEET
3			
4			
5			

MIAMI-DADE COUNTY USE ONLY
PRODUCT REVISED
as complying with the Florida Building Code
Acceptance No 12-1113.21
Expiration Date Nov. 3, 2015
By Manuel Perez
Miami-Dade Product Control

SEAL:
JAN 1 8 2013
CHRISTOPHER STANTON, P.E.
FLA P.E. #69318

STANTON ENGINEERING, INC.
STRUCTURAL ENGINEERING SERVICES
2701 NW BOCA RATON BLVD. SUITE 115
BOCA RATON, FL 33431
TEL: (561) 393-1003 FAX: (561) 393-1008

SERIES 3000/3062 ALUM. OUT-SWING CASEMENT WINDOW (L.M.I.)

SOL-A-TROL
aluminum products, inc.
4101 N.W. 132nd Street
Miami, Florida 33054
Phone: (305) 681-2020
Fax: (305) 681-2035

SCALE: NOTED
DATE: 8/18/10
DRAWN BY: OGI
CHECKED BY: C.S.

10-0920.15
DRAWING NO.

SHEET NO.
11 of 11