MIAMI-DADE COUNTY
DEPARTMENT OF REGULATORY AND ECONOMIC RESOURCES (RER)
BOARD AND CODE ADMINISTRATION DIVISION

MIAMI-DADE COUNTY
PRODUCT CONTROL SECTION
11805 SW 26 Street, Room 208
T (786) 315-2590 F (786) 315-2599
www.miamidade.gov/economy

NOTICE OF ACCEPTANCE (NOA)

Continental Glass Systems, Inc.
325 West 74 Place
Hialeah, FL 33014

SCOPE:

This NOA is being issued under the applicable rules and regulations governing the use of construction materials. The documentation submitted has been reviewed and accepted by Miami-Dade County RER - Product Control Section to be used in Miami Dade County and other areas where allowed by the Authority Having Jurisdiction (AHJ).

This NOA shall not be valid after the expiration date stated below. The Miami-Dade County Product Control Section (In Miami Dade County) and/or the AHJ (in areas other than Miami Dade County) reserve the right to have this product or material tested for quality assurance purposes. If this product or material fails to perform in the accepted manner, the manufacturer will incur the expense of such testing and the AHJ may immediately revoke, modify, or suspend the use of such product or material within their jurisdiction. RER reserves the right to revoke this acceptance, if it is determined by Miami-Dade County Product Control Section that this product or material fails to meet the requirements of the applicable building code.

This product is approved as described herein, and has been designed to comply with the Florida Building Code, including the High Velocity Hurricane Zone.

DESCRIPTION: Series "3100" 10'1" Aluminum Window Wall System - L.M.I.

APPROVAL DOCUMENT: Drawing No. **FXD-3100-LM**, titled "Series 3100 Fixed Window Large Missile Impact", sheets 1 through 7 of 7, dated 09/18/07 with revision #2 dated 10/16/12, prepared by manufacturer, signed and sealed by Kelvyn Whitfield, P.E., bearing the Miami-Dade County Product Control Revision stamp with the Notice of Acceptance number and expiration date by the Miami-Dade County Product Control Section.

MISSILE IMPACT RATING: Large and Small Missile Impact Resistant

LIMITATION: The Perimeter Sealant shall be minimum 995 Dow Corning Structural Sealant.

LABELING: Each unit shall bear a permanent label with the manufacturer's name or logo, city, state, model/series, and following statement: "Miami-Dade County Product Control Approved", unless otherwise noted herein.

RENEWAL of this NOA shall be considered after a renewal application has been filed and there has been no change in the applicable building code negatively affecting the performance of this product.

TERMINATION of this NOA will occur after the expiration date or if there has been a revision or change in the materials, use, and/or manufacture of the product or process. Misuse of this NOA as an endorsement of any product, for sales, advertising or any other purposes shall automatically terminate this NOA. Failure to comply with any section of this NOA shall be cause for termination and removal of NOA.

ADVERTISEMENT: The NOA number preceded by the words Miami-Dade County, Florida, and followed by the expiration date may be displayed in advertising literature. If any portion of the NOA is displayed, then it shall be done in its entirety.

INSPECTION: A copy of this entire NOA shall be provided to the user by the manufacturer or its distributors and shall be available for inspection at the job site at the request of the Building Official.

This NOA **revises and renews NOA# 07-0925.09** and consists of this page 1 and evidence page E-1, as well as approval document mentioned above.

The submitted documentation was reviewed by **Manuel Perez, P.E.**

MIAMI-DADE COUNTY APPROVED

3/1/13

Continental Glass Systems, Inc.

NOTICE OF ACCEPTANCE: EVIDENCE SUBMITTED

A. DRAWINGS

1. Manufacturer's die drawings and sections.
2. Drawing No **FXD-3100-LM**, titled "Series 3100 Fixed Window Large Missile Impact", sheets 1 through 7 of 7, dated 09/18/07, with revision #2 dated 10/16/12, prepared by manufacturer, signed and sealed by Kelvyn Whitfield, P.E.

B. TESTS

1. Test reports on: 1) Air Infiltration Test, per FBC, TAS 202–94
   2) Uniform Static Air Pressure Test, Loading per FBC, TAS 202–94
   3) Water Resistance Test, per FBC, TAS 202–94
   4) Small Missile Impact Test per FBC, TAS 201–94
   5) Large Missile Impact Test per FBC, TAS 201–94
   6) Cyclic Wind Pressure Loading per FBC, TAS 203–94

   along with marked-up drawings and installation diagram of a Series 3100 aluminum window wall system, prepared by Fenestration Testing Laboratory, Inc., Test Report No. **FTL-5246**, dated 06/08/07, signed and sealed by Carlos S. Rionda, P.E.
   (Submitted under previous NOA# 07-0925.09)

C. CALCULATIONS

1. Anchor verification calculations and structural analysis, complying with FBC-2004, dated 09/20/07, with revision dated 11/01/07, prepared, signed and sealed by Kelvyn Whitfield, P.E.
   (Submitted under previous NOA# 07-0925.09)
2. Glazing complies with ASTM E1300-04

D. QUALITY ASSURANCE

1. Miami-Dade Department of Regulatory and Economic Resources (RER)

E. MATERIAL CERTIFICATIONS

1. Notice of Acceptance No. **11–0624.02** issued to **E.I. DuPont DeNemours & Co.**, Inc. for their "**DuPont SentryGlas® Interlayer**" dated 08/25/11, expiring on 01/14/17.

F. STATEMENTS

1. Statement letter of conformance, no financial interest and compliance, dated 09/20/07, prepared, signed and sealed by Kelvyn Whitfield, P.E.
   (Submitted under previous NOA# 07-0925.09)
2. Statement letter of conformance, complying with FBC-2010, dated 10/12/12, prepared, signed and sealed by Kelvyn Whitfield, P.E.

G. OTHER

1. Notice of Acceptance No. **07-0925.09**, issued to Continental Glass Systems, Inc. for their Series "3100" 10' 1" Aluminum Window Wall System – L.M.I., approved on 12/20/07 and expiring on 12/20/12.

Manuel Perez, P.E.
Product Control Examiner
NOA No. 12-1115.03
Expiration Date: December 20, 2017
Approval Date: March 07, 2013

HEAD RECEPTOR

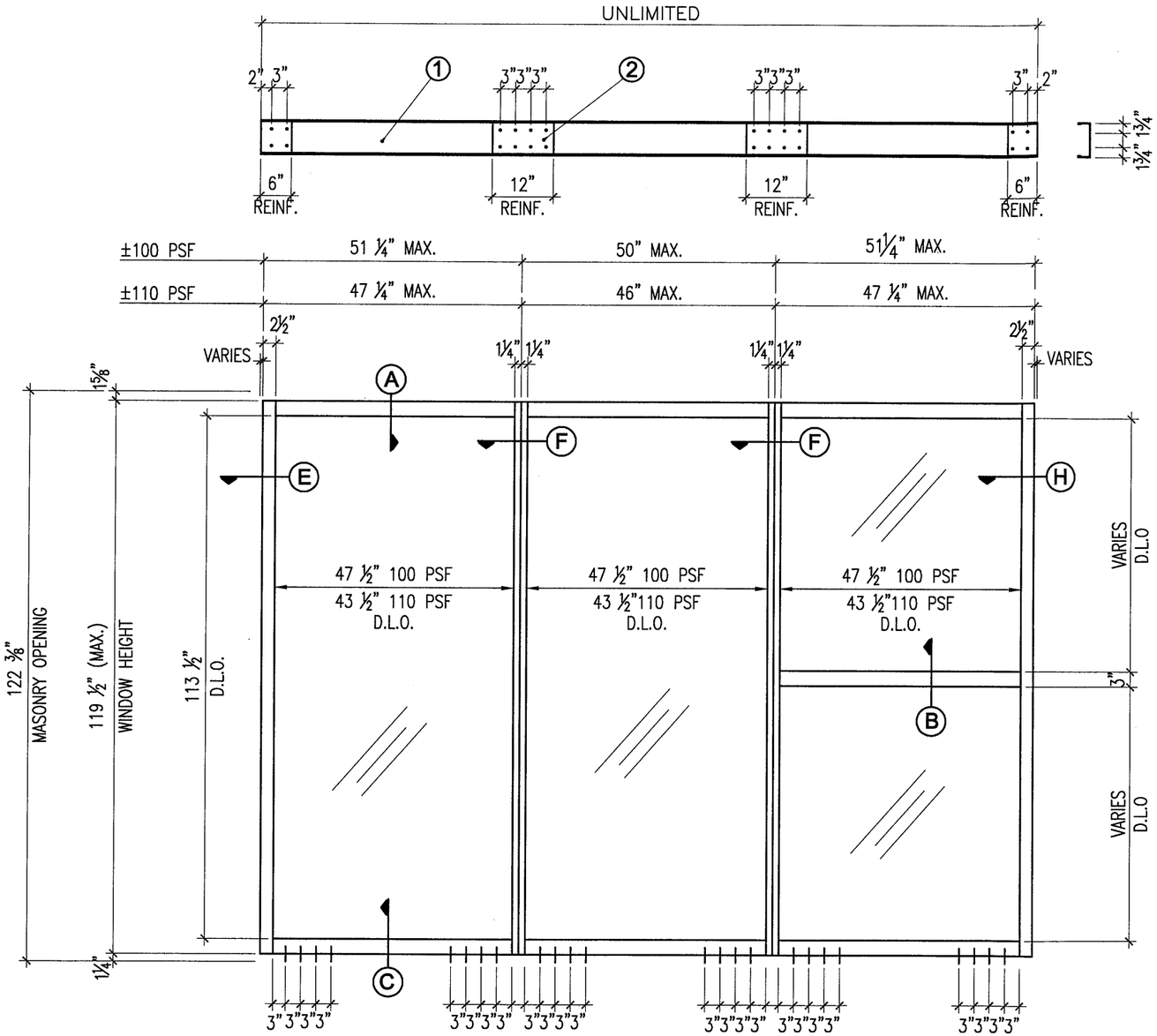

FIXED WINDOW ELEVATION

EXTERIOR VIEW

DESIGN LOAD CAPACITY (P.S.F.)		MAXIMUM D.L.O. WIDTH	MAXIMUM WINDOW WIDTH
POSITIVE	NEGATIVE		
110	110	43 ½"	46
100	100	47 ½"	50

C.G.S. SERIES 3100 FIXED WINDOW WALL

NOTES:

1. THIS FIXED WINDOW SYSTEM IS DESIGNED AND TESTED TO COMPLY WITH THE REQUIREMENTS OF THE 2010 (FBC) FLORIDA BUILDING CODE CHAPTER 16 AND 24, UNDER THE SPECIFIC CONDITION SHOWN ON THIS DRAWING. REF. FTL No. 5246

2. ALL EXTRUSIONS ARE ALUMINUM, 6005–T5 ALLOY, WITH A MINIMUM Fy OF 35000 P.S.I.

3. LARGE & SMALL MISSILE IMPACT: INSTALLATION WILL NOT REQUIRE A HURRICANE PROTECTION SYSTEM.

4. ALL INSTALLATION ANCHORS ARE 5/16" TAP–CON. 1 ½" MIN. EMBEDMENT INTO FILLED CONCRETE BLOCK OR BETTER.

5. SHIMS. USE HARD PLASTIC.

6. APPROVED STRUCTURAL SILICONE:
   - A) 795 DOW CORNING
   - B) SCS 2000 BY TREMCO
   - C) PROGLAZE SSG BY TREMCO

Continental Glass Systems Inc
325 West 74 Place
Hialeah Florida, 33014
Phone 305–231–1101 Fax 305–231–1103

Series 3100
FIXED WINDOW
LARGE MISSILE IMPACT

REVISION

No	Date	By	Description
1	9–18–07		B.C.C.O.
2	10/16/12		REVISION

Date	SEP–18–07
Scale	
Design by	G. S.
Drawing by	RICHARD
Checked by	G. S.
Drawing No.	FXD–3100–LM
Sheet	1 of 7

APPROVED	ELEVATION
PRODUCT REVISED as complying with the Florida Building Code Acceptance No 12-1115.03 Expiration Date Dec. 20, 2017 By Manuel Ruiz Miami Dade Product Control	KELVYN WHITFIELD.P.E 1002 NE 116 ST MIAMI, FL 33161 DATE 10/16/12 FLORIDA No–24140 MECHANICAL

HEAD STANDARD FRAME

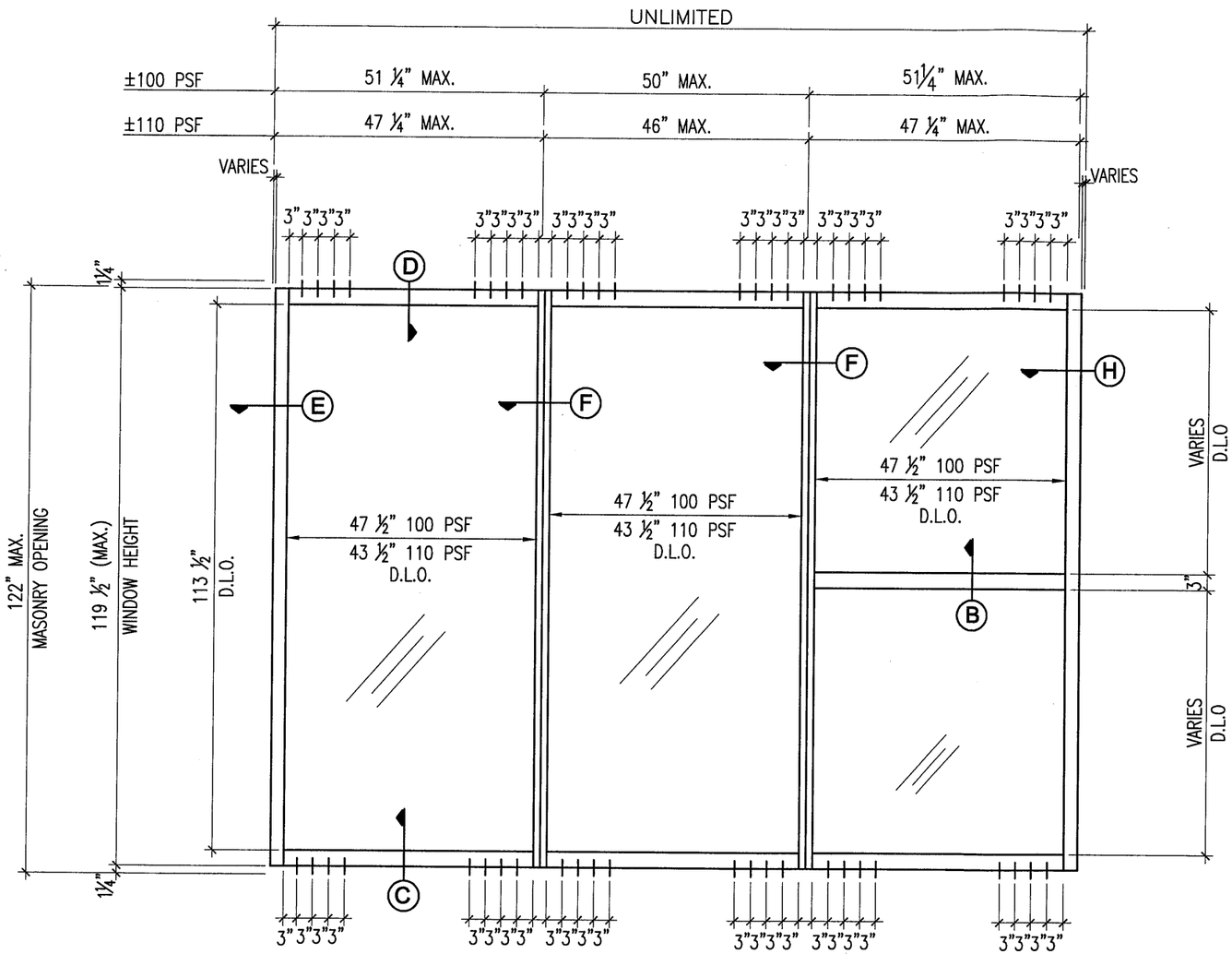

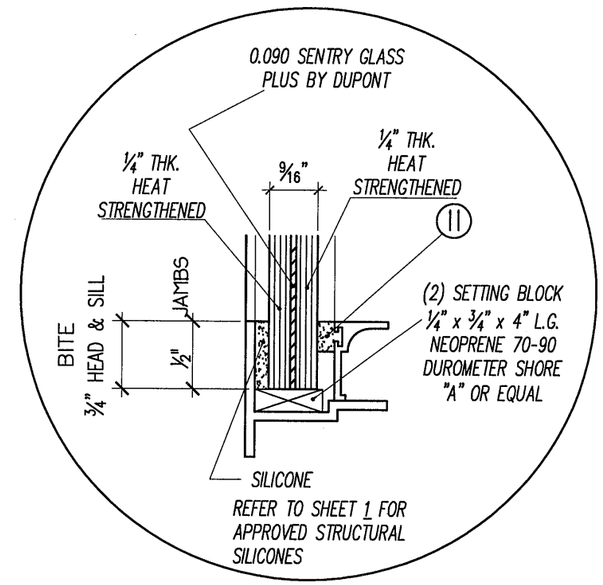

GLAZING DETAIL

FIXED WINDOW ELEVATION

EXTERIOR VIEW

DESIGN LOAD CAPACITY (P.S.F.)		MAXIMUM D.L.O. WIDTH	MAXIMUM WINDOW WIDTH
POSITIVE	NEGATIVE		
110	110	43 ½"	46
100	100	47 ½"	50

Continental Glass Systems Inc
325 West 74 Place
Hialeah Florida, 33014
Phone 305-231-1101 Fax 305-231-1103

Series 3100
FIXED WINDOW
LARGE MISSILE
IMPACT

REVISION

No	Date	By	Description
1	9-18-07		B.C.C.O.
2	10/16/12		REVISION

Date	SEP-18-07
Scale	
Design by	G. S.
Drawing by	RICHARD
Checked by	G. S.
Drawing No.	FXD-3100-LM
Sheet 2 of 7	

APPROVED	ELEVATION
PRODUCT REVISED as complying with the Florida Building Code Acceptance No 12-1115.03 Expiration Date Dec. 20, 2017 By Manuel Perez Miami Dade Product Control	KELVYN WHITFIELD.P.E 1002 NE 116 ST MIAMI, FL 33161 DATE 10/16/12 FLORIDA No-24140 MECHANICAL

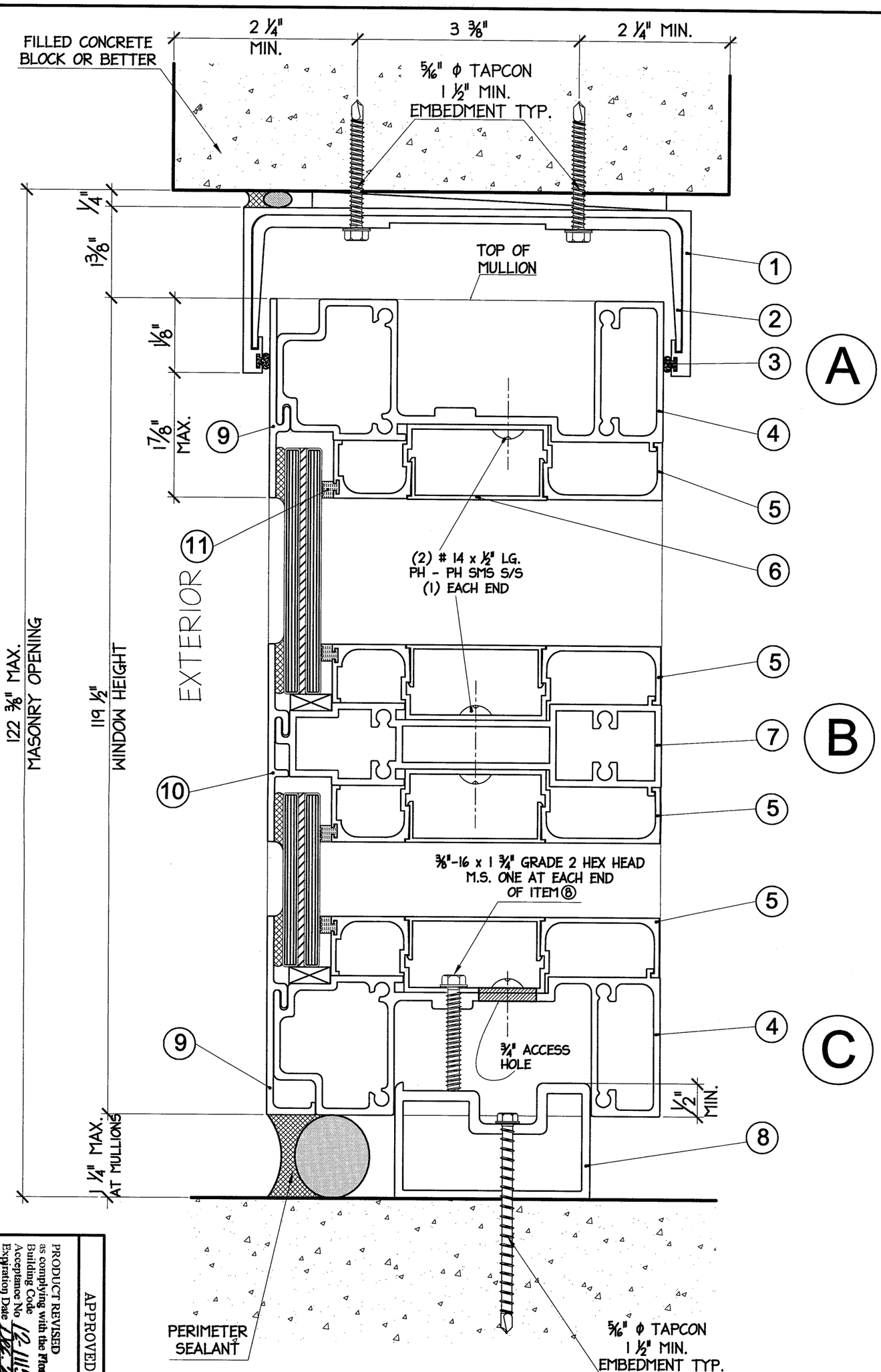

WINDOW SECTIONS WITH HEAD RECEPTOR

PRODUCT REVISED as complying with the Florida Building Code
Acceptance No 12-1115.03
Expiration Date Dec. 31, 2017
By Miami-Date Product Control

APPROVED

SECTIONS

KELVYN WHITFIELD.P.E
1002 NE 116 ST
MIAMI, FL 33161
DATE 10/16/12
FLORIDA No-24140
MECHANICAL

Date	SEP-18-07
Scale	N.T.S
Design by	G. S.
Drawing by	RICHARD
Checked by	G. S.
Drawing No.	FXD-3100-LM
Sheet 3 of 7	

REVISION

No	Date	By	Description
1	9-18-07		B.C.C.O.
2	10/16/12		REVISION

Series 3100
FIXED WINDOW
LARGE MISSILE IMPACT

Continental Glass Systems Inc
325 West 74 Place
Hialeah Florida, 33014
Phone 305-231-1101 Fax 305-231-1103

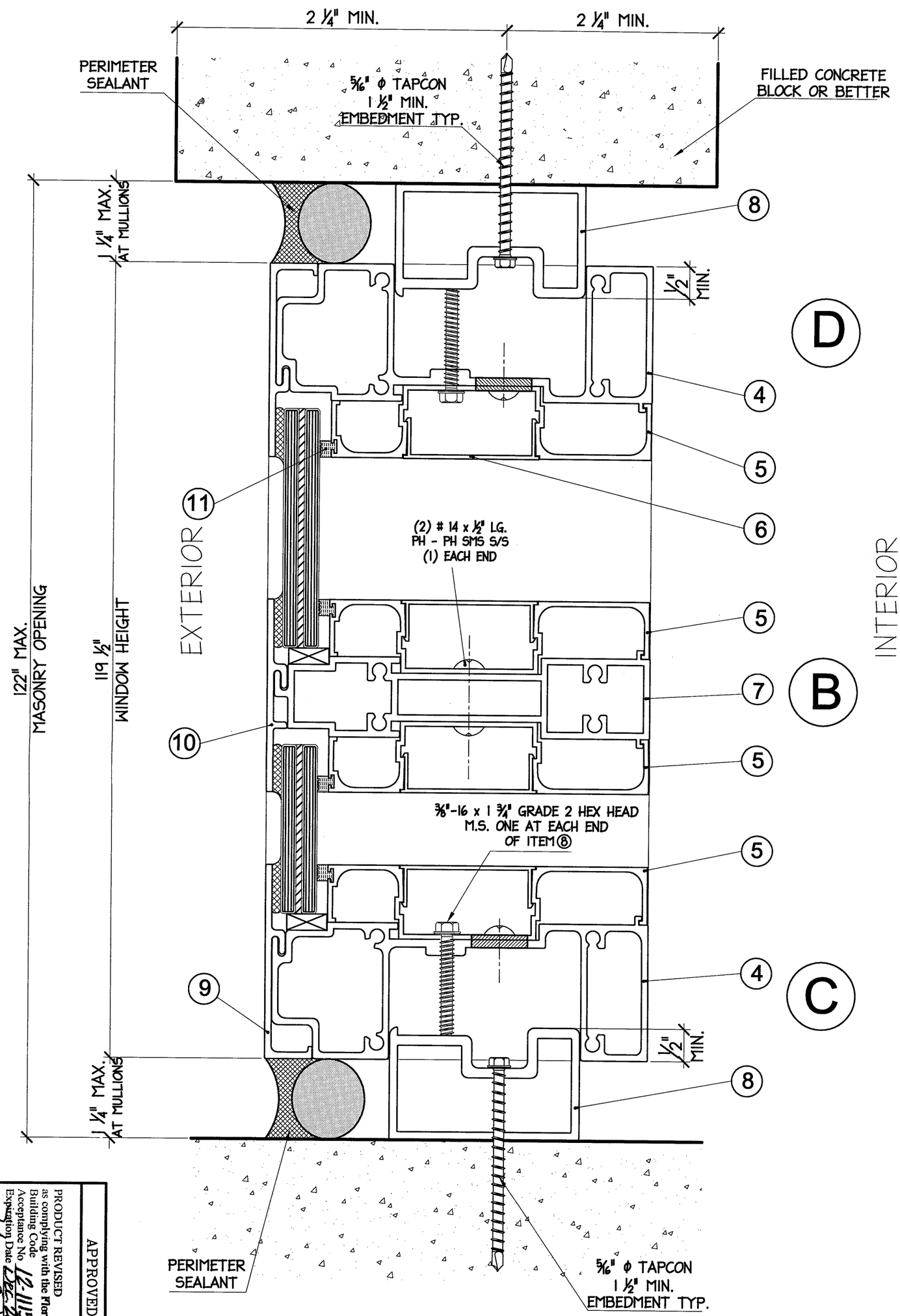

WINDOW SECTIONS WITHOUT HEAD RECEPTOR

APPROVED

PRODUCT REVISED
as complying with the Florida
Building Code
Acceptance No. 12-1115.03
Expiration Date Dec. 20, 2017
By Manuel Diaz
Miami Dade Product Control

SECTIONS

KELVYN WHITFIELD.P.E
1002 NE 116 ST
MIAMI, FL 33161
DATE 10/16/12
FLORIDA No-24140
MECHANICAL

Sheet 4 of 7

Drawing No. FXD-3100-LM

Checked by G. S.

Drawing by RICHARD

Design by G. S.

Scale N.T.S

Date SEP-18-07

REVISION

No	Date	By	Description
1	9-18-07		B.C.C.O.
2	10/16/12		REVISION

Series 3100
FIXED WINDOW
LARGE MISSILE IMPACT

Continental Glass Systems Inc
325 West 74 Place
Hialeah Florida, 33014
Phone 305-231-1101 Fax 305-231-1103

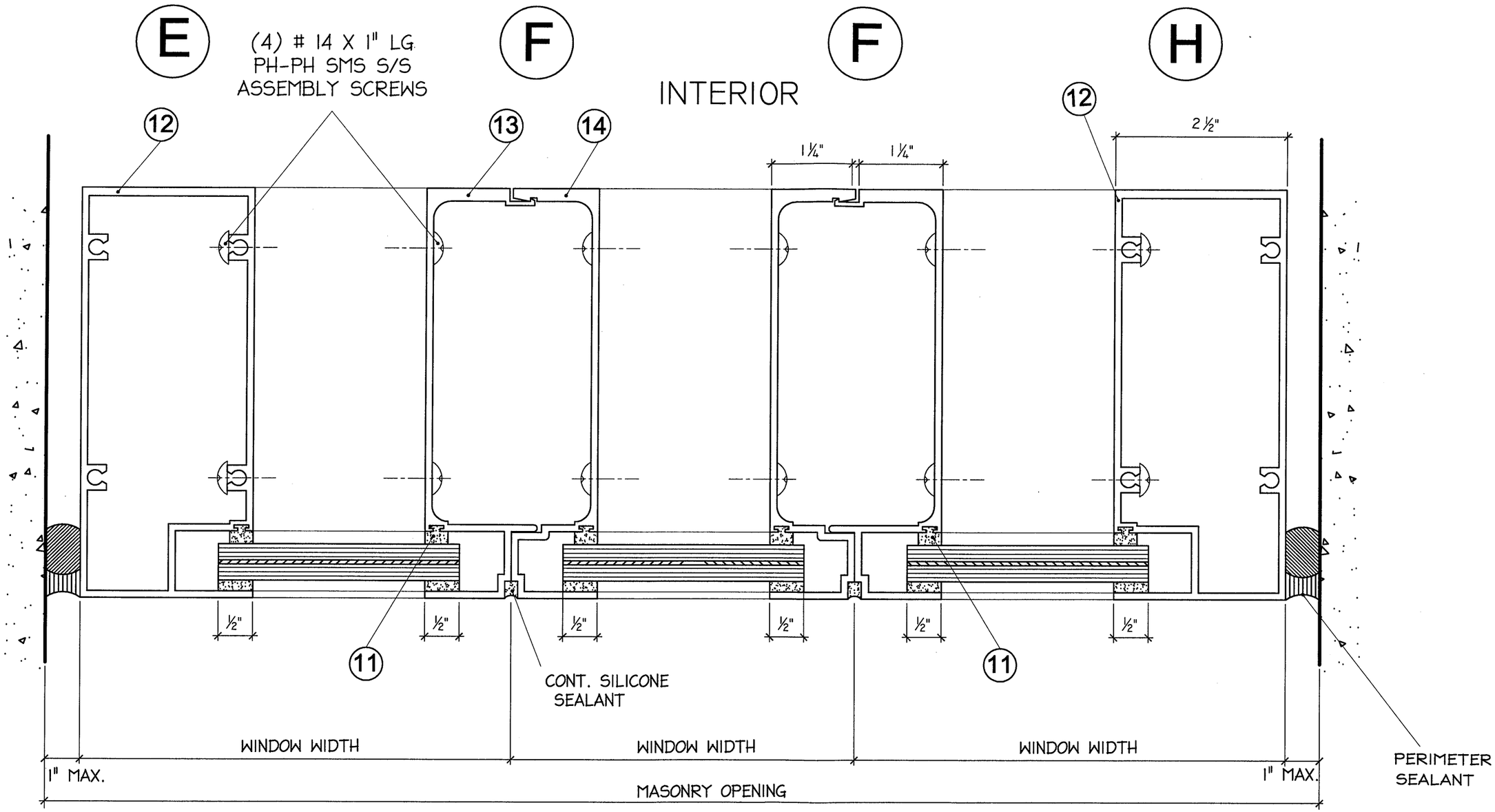

EXTERIOR

Continental Glass Systems Inc
325 West 74 Place
Hialeah Florida, 33014
Phone 305-231-1101 Fax 305-231-1103

Series 3100
FIXED WINDOW
LARGE MISSILE
IMPACT

REVISION

No	Date	By	Description
1	9-18-07		B.C.C.O.
2	10/16/12		REVISION

Date	SEP-18-07
Scale	
Design by	G. S.
Drawing by	RICHARD
Checked by	G. S.
Drawing No.	FXD-3100-LM
Sheet 5 of 7	

APPROVED	SECTIONS
PRODUCT REVISED as complying with the Florida Building Code Acceptance No 12-1115.03 Expiration Date Dec. 20, 2017 By Manuel Diaz Miami Dade Product Control	KELVYN WHITFIELD.P.E 1002 NE 116 ST MIAMI, FL 33161 DATE 10/18/12 FLORIDA No-24140 MECHANICAL

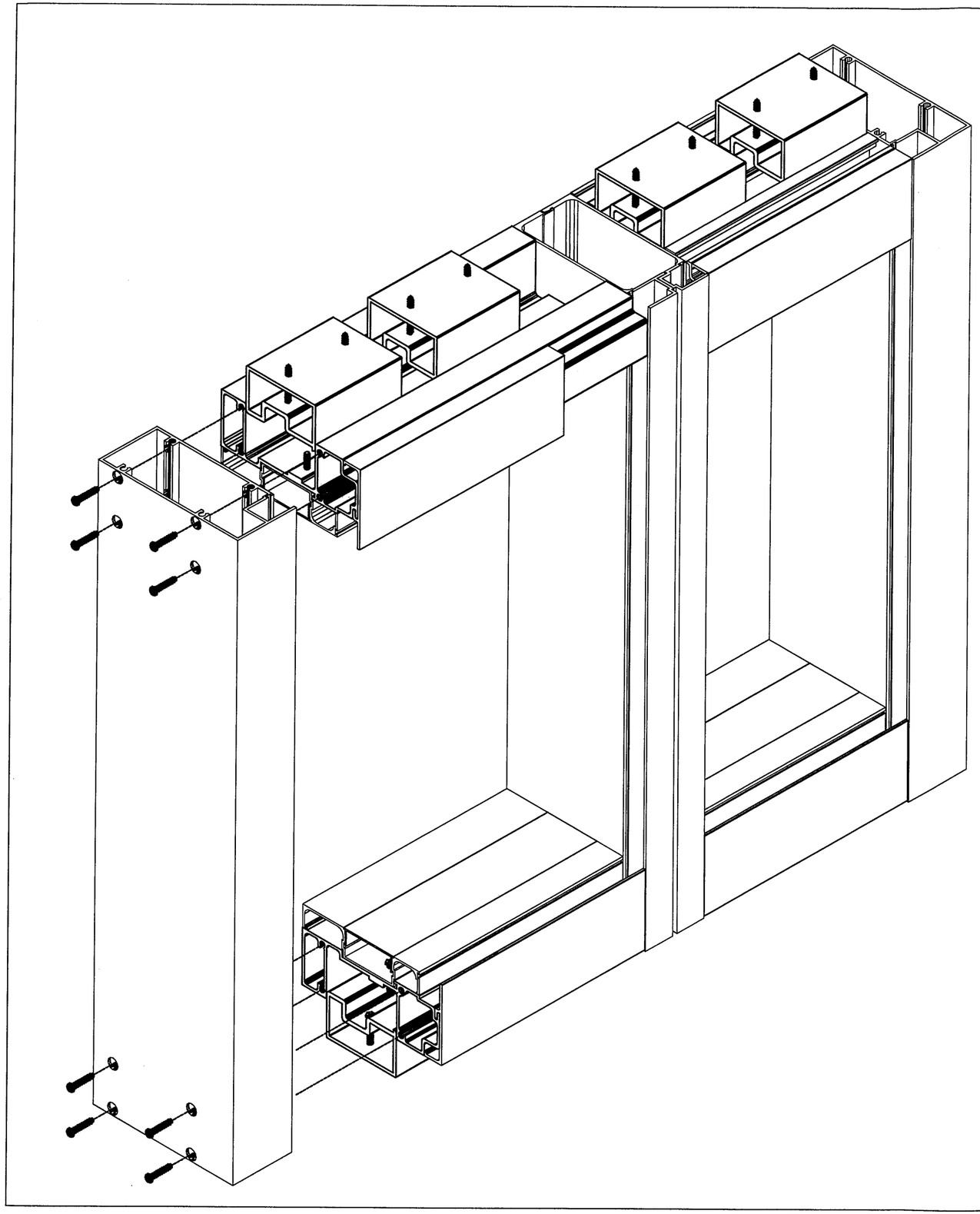

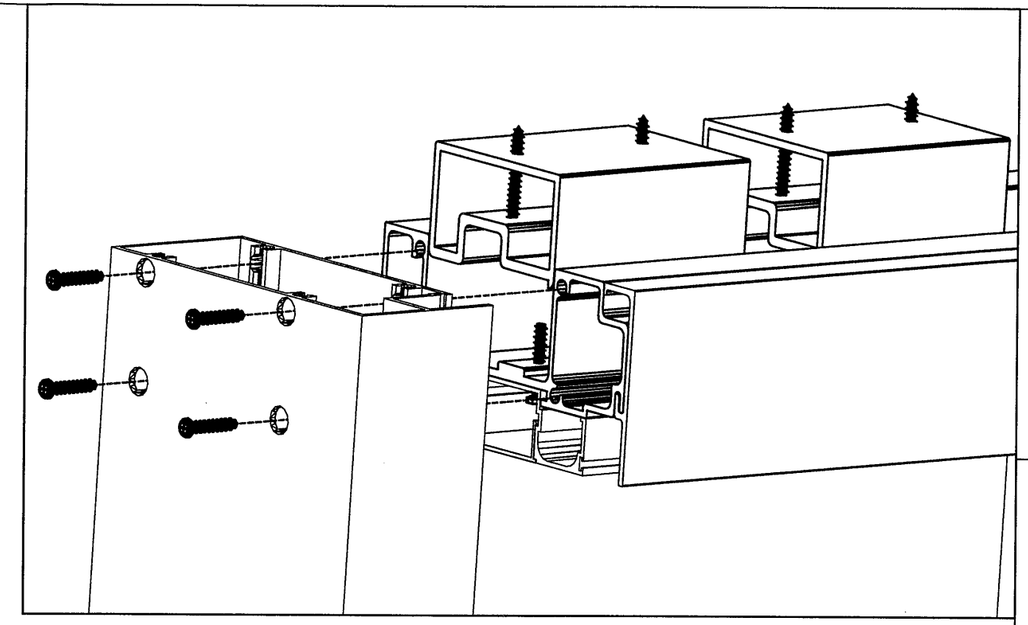

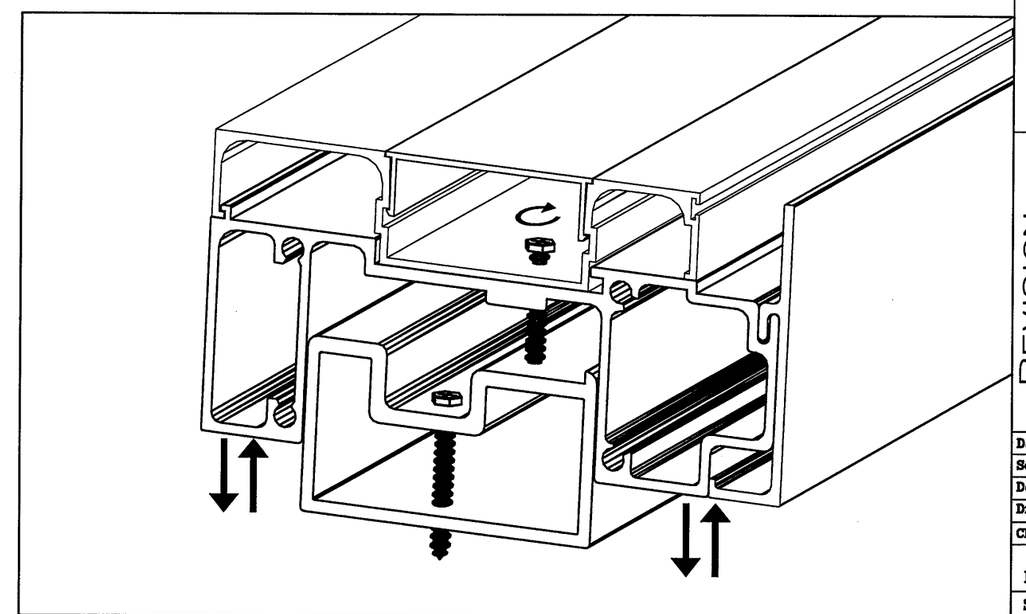

Continental Glass Systems Inc
325 West 74 Place
Hialeah Florida, 33014
Phone 305-231-1101 Fax 305-231-1103

Series 3100
FIXED WINDOW
LARGE MISSILE
IMPACT

REVISION

No	Date	By	Description
1	9-18-07		B.C.C.O.
2	10/16/12		REVISION

Date	SEP-18-07
Scale	
Design by	G. S.
Drawing by	RICHARD
Checked by	G. S.
Drawing No.	FXD-3100-LM
Sheet 6 of 7	

APPROVED

PRODUCT REVISED
as complying with the Florida
Building Code
Acceptance No 12-1115.03
Expiration Date Dec. 20, 2017
By Manuel Cerra
Miami-Dade Product Control

ISOMETRIC

KELVYN WHITFIELD.P.E
1002 NE 116 ST
MIAMI, FL 33161

DATE 10/16/12
FLORIDA No-24140
MECHANICAL

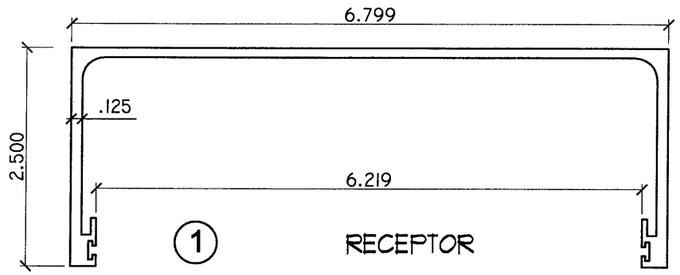

1 RECEPTOR

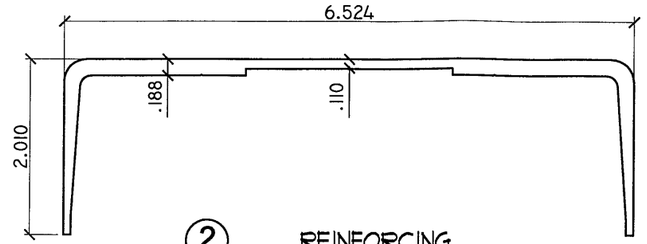

2 REINFORCING

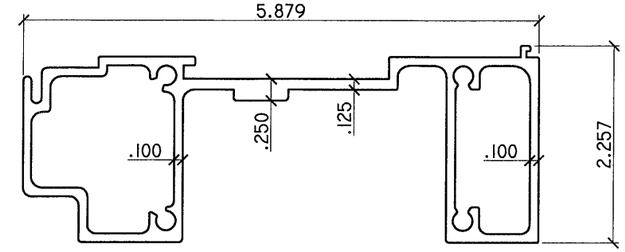

4 TOP AND BOTTOM

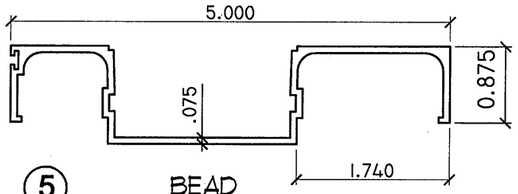

5 BEAD

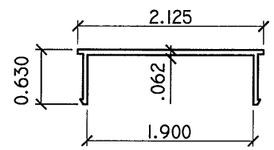

6 COVER

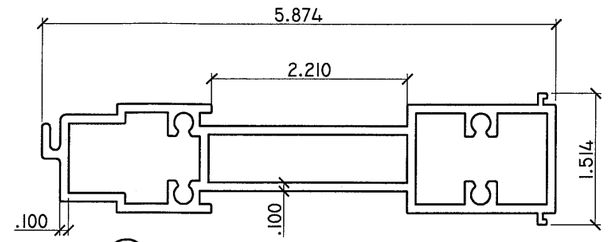

7 INTERMEDIATE

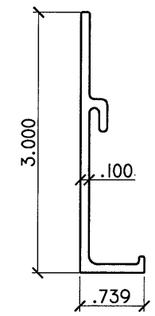

9 GLASS STOP

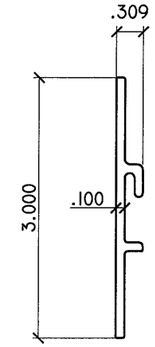

10 GLASS STOP

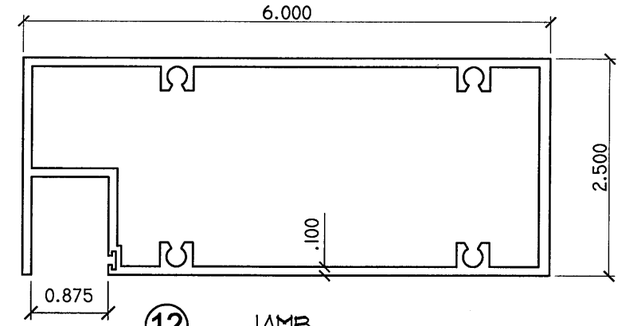

12 JAMB

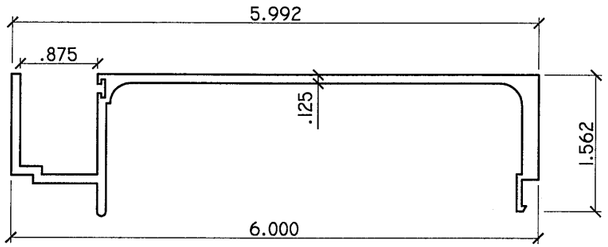

13 MALE

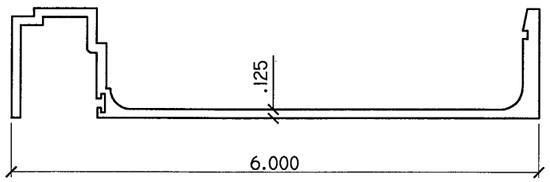

14 FEMALE

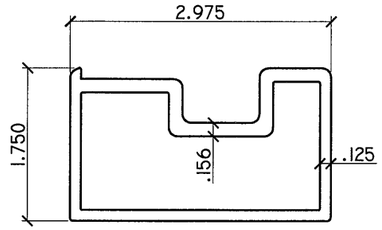

8 TUBE

FIXED WINDOW

ITEM #	PART NUMBER	PART NAME	ALLOY & TEMPERED
1	2000 - 07	RECEPTOR	6005-T5
2	2000 - 16	REINFORCING LENGHT 12"	6005-T5
3	FP-448-V	VINYL BULB	PROTOTYPE
4	3000 - 08	TOP & BOTTOM	6005-T5
5	3000 - 03	BEAD	6005-T5
6	3000 - 07	COVER	6005-T5
7	3000 - 10	INTERMEDIATE	6005-T5
8	3000 - 12	TUBE LENGTH 15"	6005-T5
9	3000 - 09	GLASS STOP	6005-T5
10	3000 - 11	GLASS STOP	6005-T5
11	CGS - 01	GLASS SPACER	PROTOTYPE
12	3000 - 09	JAMB	6005-T5
13	3000 - 05	MALE	6005-T5
14	3000 - 06	FEMALE	6005-T5

Continental Glass Systems Inc
325 West 74 Place
Hialeah Florida, 33014
Phone 305-231-1101 Fax 305-231-1103

Series 3100
FIXED WINDOW
LARGE MISSILE IMPACT

REVISION

No	Date	By	Description
1	9-18-07		B.C.C.O.
2	10/16/12		REVISION

Date	SEP-18-07
Scale	
Design by	G. S.
Drawing by	RICHARD
Checked by	G. S.
Drawing No.	FXD-3100-LM
Sheet 7 of 7	

APPROVED

PRODUCT REVISED
as complying with the Florida Building Code
Acceptance No 12-1115.03
Expiration Date Dec. 20, 2017
By Manuel Perez
Miami-Dade Product Control

EXTRUSIONS AND PARTS

KELVYN WHITFIELD.P.E
1002 NE 116 ST
MIAMI, FL 33161
DATE 10/16/12
FLORIDA No-24140
MECHANICAL