MIAMI-DADE COUNTY
PRODUCT CONTROL SECTION
11805 SW 26 Street, Room 208
Miami, Florida 33175-2474
T (786) 315-2590 F (786) 315-2599
www.miamidade.gov/economy

DEPARTMENT OF REGULATORY AND ECONOMIC RESOURCES (RER)
BOARD AND CODE ADMINISTRATION DIVISION

NOTICE OF ACCEPTANCE (NOA)

Johnson Controls, Inc. (WI)
507 E. Michigan Street
Milwaukee, WI 53202

SCOPE: This NOA is being issued under the applicable rules and regulations governing the use of construction materials. The documentation submitted has been reviewed and accepted by Miami-Dade County RER-Product Control Section to be used in Miami Dade County and other areas where allowed by the Authority Having Jurisdiction (AHJ).

This NOA shall not be valid after the expiration date stated below. The Miami-Dade County Product Control Section (In Miami Dade County) and/or the AHJ (in areas other than Miami Dade County) reserve the right to have this product or material tested for quality assurance purposes. If this product or material fails to perform in the accepted manner, the manufacturer will incur the expense of such testing and the AHJ may immediately revoke, modify, or suspend the use of such product or material within their jurisdiction. RER reserves the right to revoke this acceptance, if it is determined by Miami-Dade County Product Control Section that this product or material fails to meet the requirements of the applicable building code. This product is approved as described herein, and has been designed to comply with the Florida Building Code, including the High Velocity Hurricane Zone.

DESCRIPTION: Model LH-1250 Aluminum Louver with optional VD-1250 Damper

APPROVAL DOCUMENT: Drawing No. **60-022272-00D/00B**, titled "LH-1250 & VD-1250", sheets 1 through 38 of 38, prepared by the manufacturer, dated 08/20/2012, signed and sealed by Daniel J. Rau, P.E., bearing the Miami-Dade County Product Control approval stamp with the Notice of Acceptance number and approval date by the Miami-Dade County Product Control Section.

MISSILE IMPACT RATING: Large and Small Missile Impact Resistant

LABELING: Each unit shall bear a permanent label with the manufacturer's name or logo, Geneva, AL, model/series, and following statement: "Miami-Dade County Product Control Approved", unless otherwise noted herein.

RENEWAL of this NOA shall be considered after a renewal application has been filed and there has been no change in the applicable building code negatively affecting the performance of this product.

TERMINATION of this NOA will occur after the expiration date or if there has been a revision or change in the materials, use, and/or manufacture of the product or process. Misuse of this NOA as an endorsement of any product, for sales, advertising or any other purposes shall automatically terminate this NOA. Failure to comply with any section of this NOA shall be cause for termination and removal of NOA.

ADVERTISEMENT: The NOA number preceded by the words Miami-Dade County, Florida, and followed by the expiration date may be displayed in advertising literature. If any portion of the NOA is displayed, then it shall be done in its entirety.

INSPECTION: A copy of this entire NOA shall be provided to the user by the manufacturer or its distributors and shall be available for inspection at the job site at the request of the Building Official.

This NOA consists of this page 1 and evidence pages E-1 and E-2, as well as approval document mentioned above.

The submitted documentation was reviewed by **Carlos M. Utrera, P.E.**

MIAMI-DADE COUNTY APPROVED

02/15/2013

NOA No. 12-1115.05
Expiration Date: January 28, 2017
Approval Date: February 14, 2013

NOTICE OF ACCEPTANCE: EVIDENCE SUBMITTED

A. DRAWINGS

1. Drawing No. **60-022272-00D/00B**, titled "LH-1250 & VD-1250", sheets 1 through 38 of 38, prepared by the manufacturer, dated 08/20/2012, signed and sealed by Daniel J. Rau, P.E.

B. TESTS *"Submitted under NOA # 06-1205.08"*

1. Test reports on: 1) Uniform Static Air Pressure Test, Loading per FBC TAS 202-94
   2) Large Missile Impact Test per FBC, TAS 201-94
   3) Cyclic Wind Pressure Loading per FBC, TAS 203-94
   along with marked-up drawings and installation diagram of Model EME6625D 6" Aluminum Louvers, prepared by National Certified Testing Laboratories, Report No. **210-3359-1**, dated 11/27/2006, signed and sealed by Gerard J. Ferrara, P.E.
2. Test Report on Wind Driven Rain Resistance per TAS 100(A)-95 of a vertical blade louver Model EME6625D with CD50 Damper, prepared by Architectural Testing Report No. **64940.01-109-44,** dated 06/23/2006, signed and sealed by Steven M. Urich, P.E.
3. Test report on Large Missile Impact Test, Cyclic Wind Pressure Test and Uniform Static Air Pressure Test "Aluminum Louver Assemblies with Damper", prepared by Construction Research Laboratories, Inc., Test Report No. **6496**, dated 05/13/1998, signed and sealed by N.S. Balsara, P.E.
4. Test Report on Large Missile Impact Test, Cyclic Wind Pressure Test "Aluminum Louver Assembly with Damper", prepared by Construction Research Laboratories, Inc., Test Report No. **6550**, dated 12/09/1998, signed and sealed by N.S. Balsara, P.E.

C. CALCULATIONS *"Submitted under NOA # 06-1205.08"*

1. EME6625D alternate attachment method, prepared by Ruskin Company, dated 10/18/2010, signed and sealed by Daniel J. Rau, P.E.
2. Louver/Damper Blade & Mullion Calculations, dated 05/11/1998, pages 1 to 7 of 7 with appendix A, prepared by R. E. Beason II, signed and sealed by E. P. Hutson Jr., P.E.
3. Louver/Damper Blade & Mullion Calculations, dated 10/20/1998, pages 1 to 7 of 7, with appendix A, prepared by R. E. Beason II, signed and sealed by E. P. Hutson Jr., P.E.

02/15/2013

Carlos M. Utrera, P.E.
Product Control Examiner
NOA No. 12-1115.05
Expiration Date: January 28, 2017
Approval Date: February 14, 2013

NOTICE OF ACCEPTANCE: EVIDENCE SUBMITTED

D. QUALITY ASSURANCE

1. Miami-Dade Department of Regulatory and Economic Resources (RER)

E. MATERIAL CERTIFICATIONS ***"Submitted under NOA # 12-0628.06"***

1. Test report on impact test of a vertical blade louver per AMCA 540, prepared by the manufacturer, dated 05/31/2012, signed and sealed by Daniel J. Rau, P.E.

F. STATEMENTS

1. Statement letter of code conformance to 2010 FBC, issued by the manufacturer, dated 01/31/2013, signed and sealed by Daniel J. Rau, P.E.
2. Statement letter of no financial interest issued by the manufacturer, dated 01/31/2013, signed and sealed by Daniel J. Rau, P.E.
3. Private label agreement dated 10/12/2012.

02/15/2013

Carlos M. Utrera, P.E.
Product Control Examiner
NOA No. 12-1115.05
Expiration Date: January 28, 2017
Approval Date: February 14, 2013

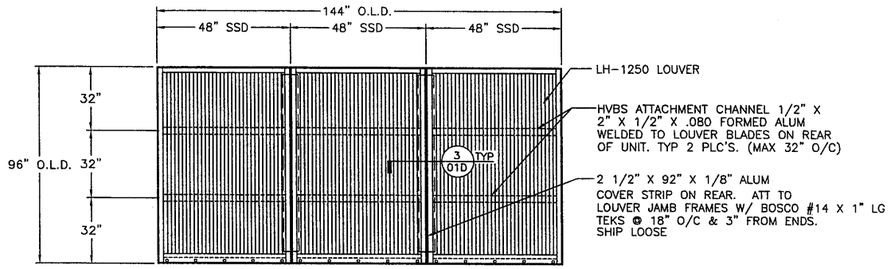

LH-1250 LOUVER ASSEMBLY "A"

NTS — DESIGN PRESSURE RATING: +160/ -140 PSF. — FRONT VIEW

SEE SECTION DETAILS -06D FOR APPLICABILITY

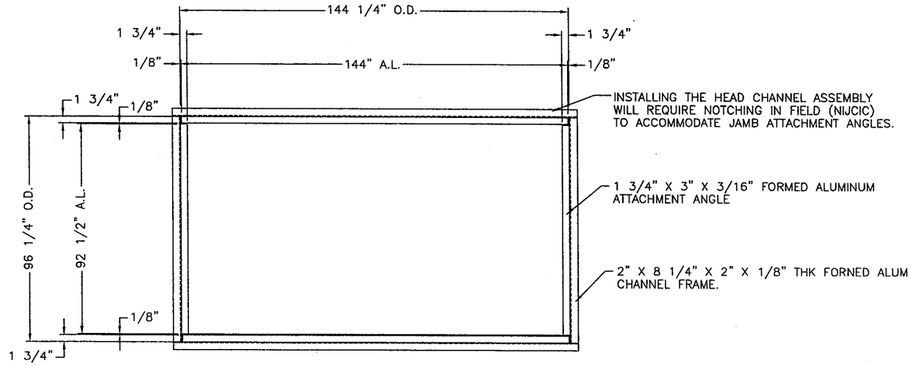

CHANNEL FRAME & ATT ANGLE ELEVATION

REAR VIEW

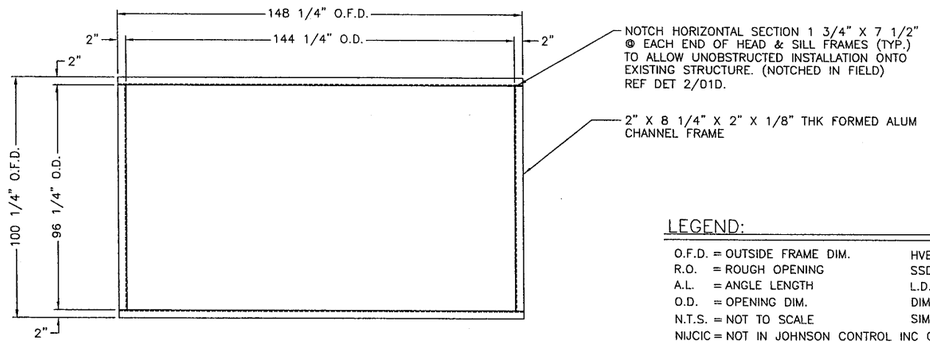

CHANNEL FRAME ELEVATION

FRONT VIEW

1 REAR & FRONT ELEVATIONS VIEW OF CHANNEL FRAME & ATT. ANGLE

N.T.S.

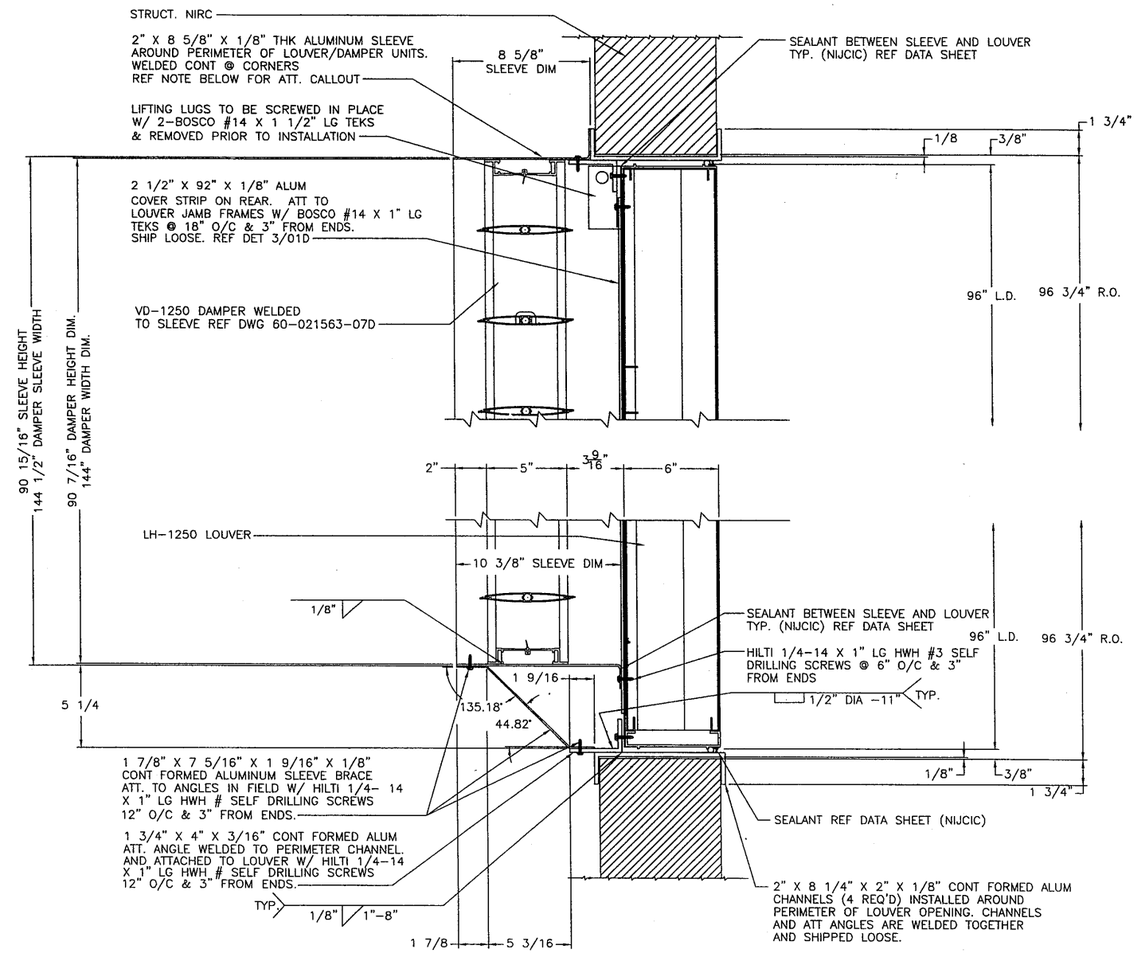

LH-1250/VD-1250 SLEEVED SECTION (JAMB SIM TO HEAD)

3"=1'-0"

LEGEND:

O.F.D. = OUTSIDE FRAME DIM.	HVBS = HIDDEN VERTICAL BLADE SUPPORT.
R.O. = ROUGH OPENING	SSD = SHIP SECTION DIM.
A.L. = ANGLE LENGTH	L.D. = LOUVER DIM.
O.D. = OPENING DIM.	DIM. = DIMENSION
N.T.S. = NOT TO SCALE	SIM = SIMILAR
NIJCIC = NOT IN JOHNSON CONTROL INC CONTRACT	

NOTES:

- THE STRUCTURAL SUBSTRATE THAT HOLDS THE LOUVER IN PLACE, IS ASSUMED TO BE STRUCTURALLY SOUND AND STABLE TO TAKE THE LOADS DISPERSED BY THE LOUVER.
- LOUVER IS NONBEARING AND IS NOT DESIGNED TO WITHSTAND BUILDING DEADLOADS.

SHEET INDEX:

1. LH-1250 & VD-1250 ASSEMBLIES AND SECTION
2. LH-1250 & VD-1250 ASSEMBLIES AND SECTION
3. LH-1250 MOISTURE BLADE
4. LH-1250 HEAD FRAME
5. EME6325D SILL FRAME
6. LH-1250 & VD-1250 ASSEMBLIES AND SECTIONS
7. LH-1250 & VD-1250 FASTENER LOADS
8. VD-1250 ASSEMBLY WITH INTERNAL HAND QUAD
9. VD-1250 STANDARD DAMPER ASSEMBLY
10. VD-1250 TOP AND BOTTOM FRAME
11. VD-1250 SIDE FRAME
12. VD-1250 BLADE
13. ALUM FRAME CORNER CLIP
14. CONTROL DAMPER BLADE SEAL
15. BEARING AXLE .370LG W/ .120" FLANGE
16. F-SIDE LINKAGE CRANK ARM ASSEMBLY
17. CONCEALED LINKAGE PLATE
18. 7/16" HEX AXLE
19. 7/16" HEX IDLER AXLE
20. JAMB SEAL
21. LINKAGE TIE BAR
22. CONCEALED LINKAGE OVER-TRAVEL STOP
23. CRANK PIN
24. HAND QUAD VD-1250 DAMPER
25. AIRFOIL BLADE BRACKET
26. HAND QUAD ARM
27. U-BOLT
28. HAND QUADRANT PLATE
29. LH-1250 ASSEMBLIES AND SECTIONS
30. LH-1250 TEST LOUVERS - ROUND SHAPES
31. LH-1250 TEST LOUVERS - ROUND SHAPES
32. LH-1250 ASSEMBLY SECTION & DETAILS - CLIP ANGLE INSTALLATION
33. LH-1250 TEST LOUVER - CLIP ANGLE INSTALLATION DETAILS

10/5/2012

DANIEL J. RAU LICENSE NO. 63636 STATE OF FLORIDA PROFESSIONAL ENGINEER

FOR FASTENER LOADS REF DWG. 60-022272-06D

FOR OFFICE USE ONLY

Approved as complying with the Florida Building Code
Date 2/14/2013
NOA# 12-1115.05
Miami Dade Product Control
By

ENGINEER OF RECORD: DANIEL J. RAU
ENGINEERING DISCIPLINE: CIVIL ENGINEER
REGISTRATION NUMBER: STATE OF FLORIDA #0063636

DWN. BY:	CHK. BY:	APP'D. BY:	APP'D. BY:
DRP			
DATE: 8-20-12	DATE:	DATE:	DATE:

LOUVER DAMPER ASSY
DADE CTY. FLORIDA

CHANGE LETTER	REVISION DESCRIPTION	DWN. BY:	CHK'D. BY:	APP'D. BY:	APP'D. BY:	DATE

Johnson Controls

PLOT SCALE: NONE

ECN 4494 DATE: 8-20-12

TITLE: LH-1250 & VD-1250 ASSEMBLIES & SECTIONS

DWG. NO.: 60-022272-00D

SHEET 1 OF 38

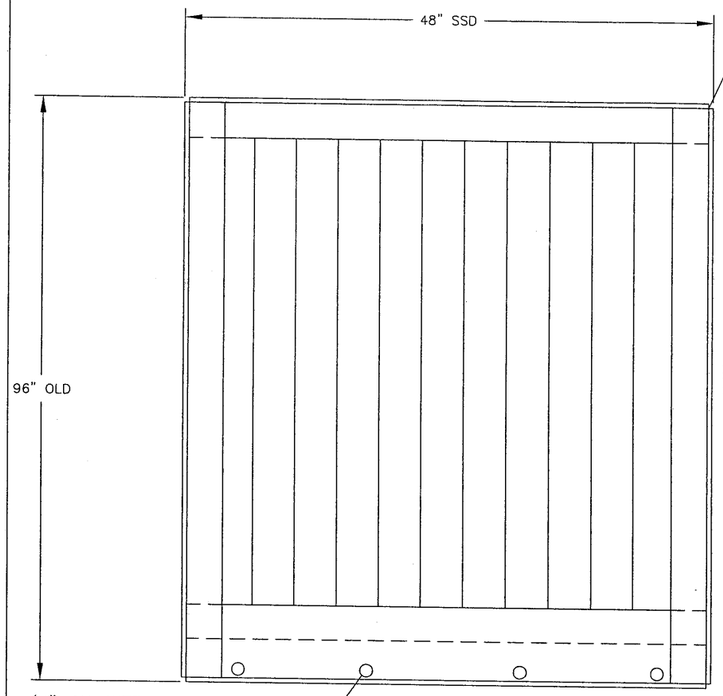

FRONT ELEVATION VIEW (PER SHIP SECTION)

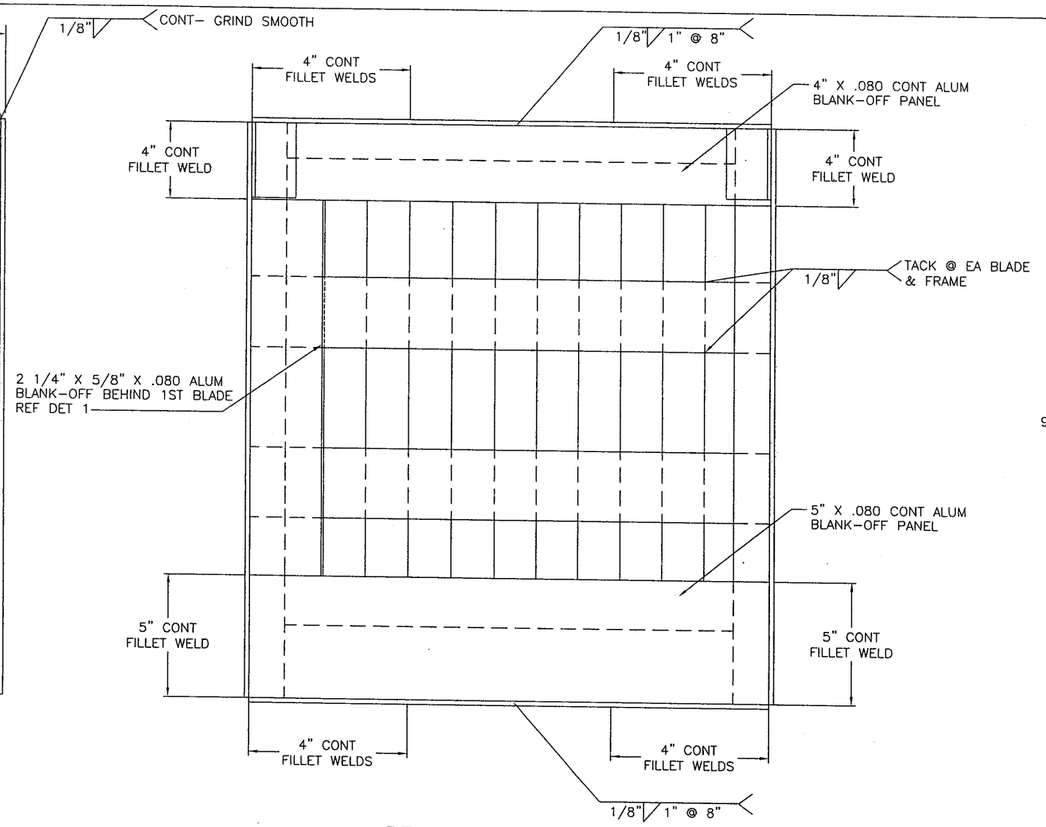

REAR ELEVATION VIEW

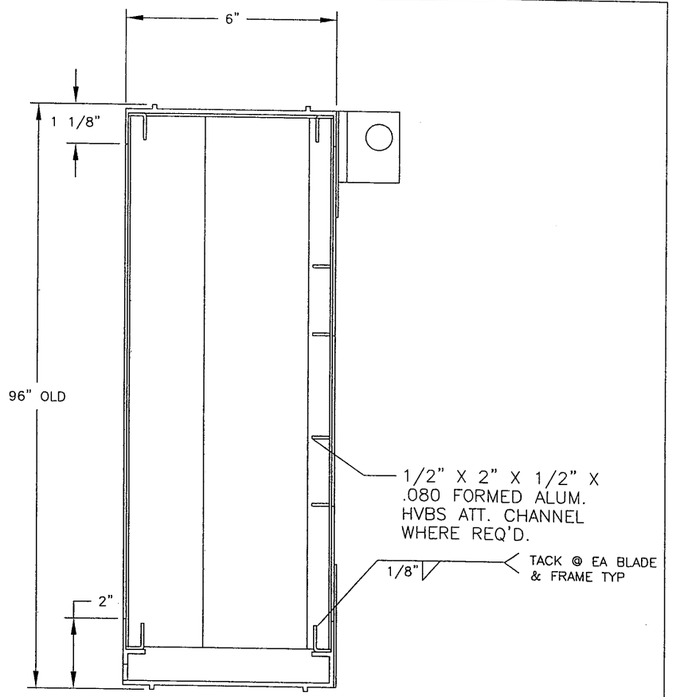

LH–1250 SECTION

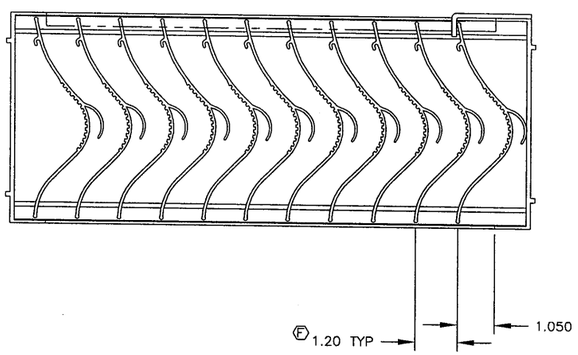

SECTION PLANVIEW

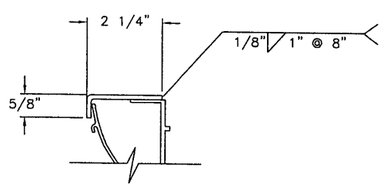

1 1ST BLADE JAMB BLANKOFF DETAIL
N.T.S.
MAT'L: .080 CONT FORMED ALUMINUM

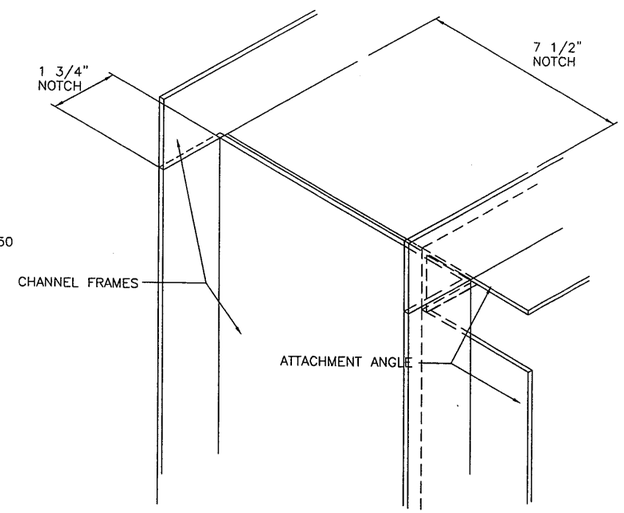

2 ISOMETRIC NOTCHING DETAIL
N.T.S.

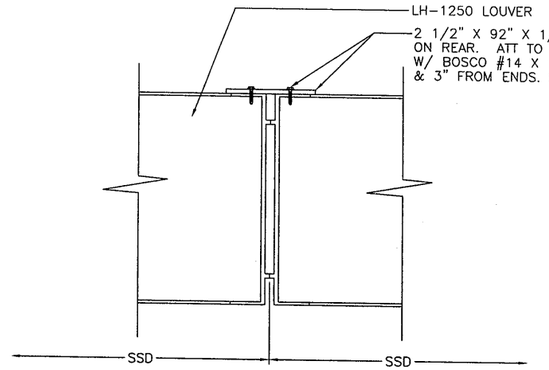

3 MULLION SPLICE DETAIL
N.T.S.

FOR OFFICE USE ONLY

Approved as complying with the
Florida Building Code
Date 2/14/2013
NOA# 12-1115.05
Miami Dade Product Control
By

DANIEL J. RAU 11/5/2012
LICENSE NO. 63636
STATE OF FLORIDA
PROFESSIONAL ENGINEER

SHEET 2 OF 38

ENGINEER OF RECORD	DANIEL J. RAU
ENGINEERING DISCIPLINE	CIVIL ENGINEER
REGISTRATION NUMBER	STATE OF FLORIDA #0063636
DWN. BY: DRP	CHK. BY:
APP'D. BY:	APP'D. BY:
DATE: 8–20–12	DATE:
DATE:	DATE:

CHANGE LETTER	REVISION DESCRIPTION	DWN. BY:	CHK'D. BY:	APP'D. BY:	APP'D. BY:	DATE
	Johnson Controls					

PLOT SCALE: NONE
ECN 4494
DATE: 8–20–12

TITLE: LOUVER DAMPER ASSY
DADE CTY. FLORIDA

TITLE: LH–1250 & VD–1250
ASSEMBLIES & SECTIONS

DWG. NO.: 60-022272-00D

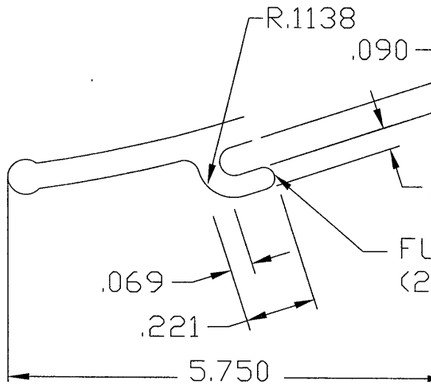

DETAIL B
SCALE: 1"=2"

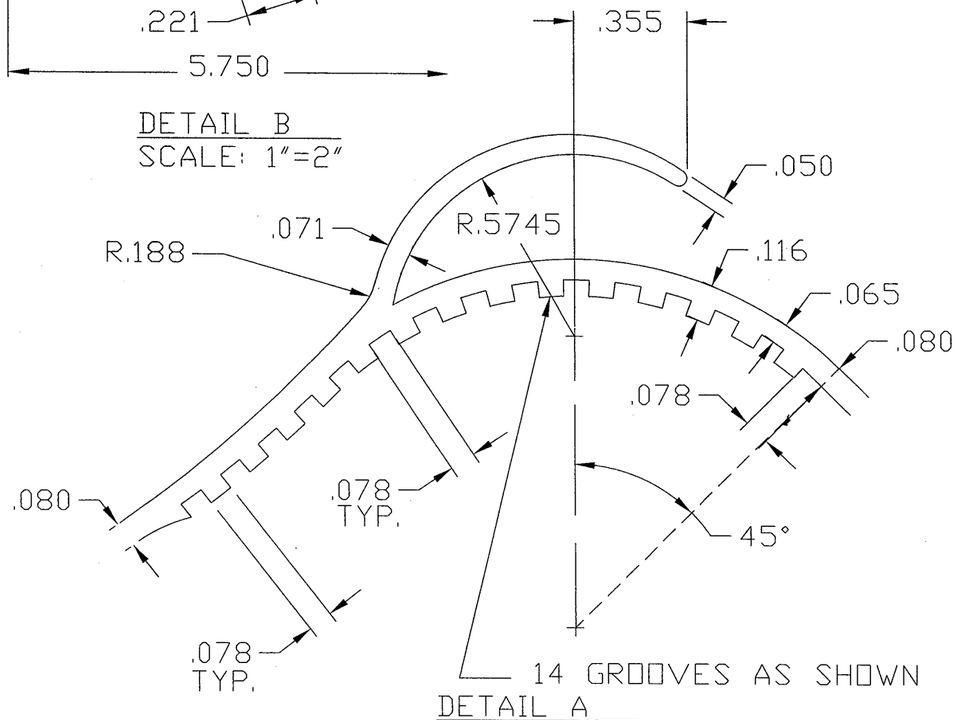

14 GROOVES AS SHOWN

DETAIL A
SCALE: 1"=2"

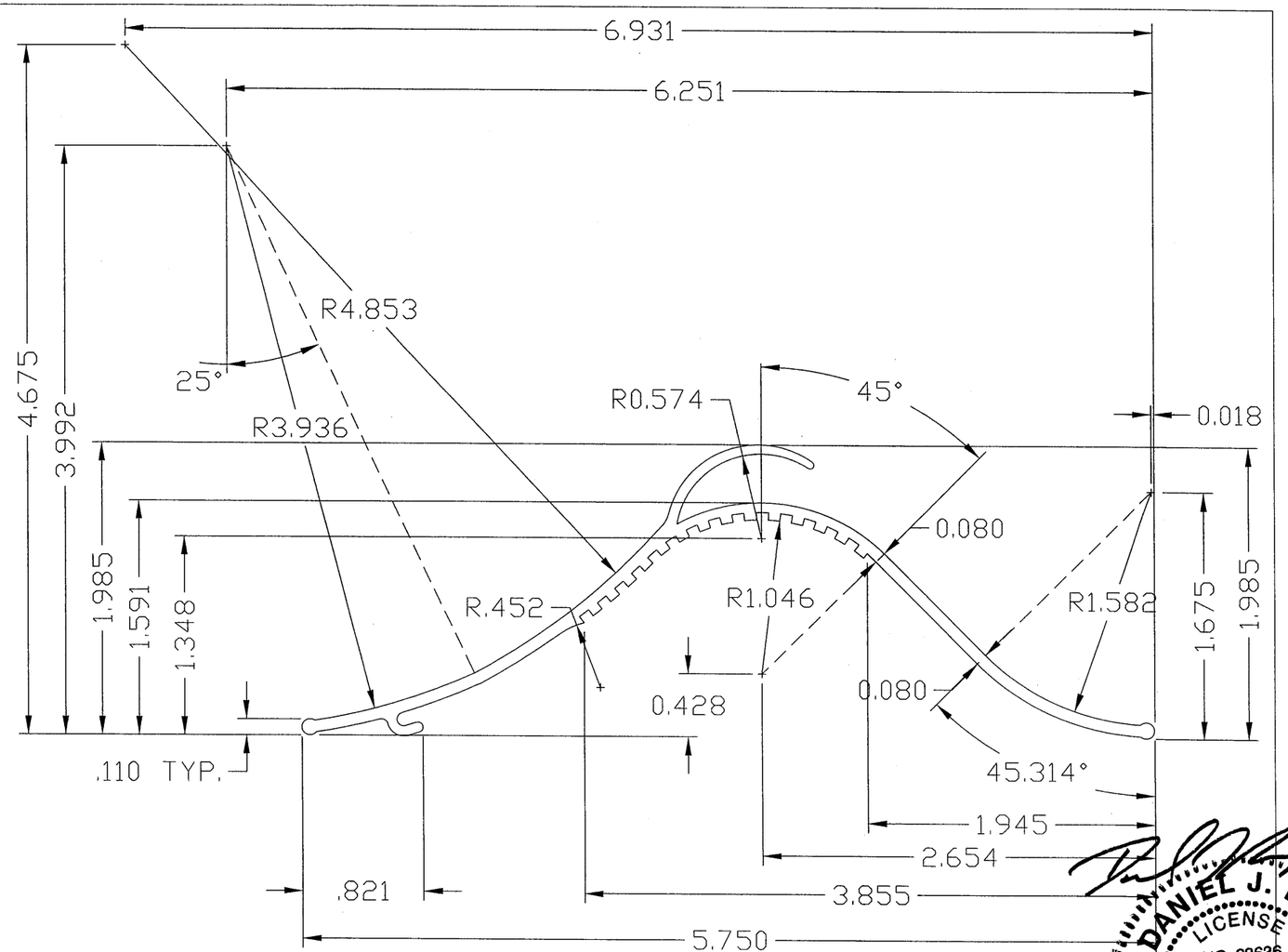

AREA= .673
PERIMETER= 17.839
WT. PER. FT.= .792

NOTES:
1. ALUMINUM ASSOCIATION TOLLERANCES APPLY UNLESS OTHERWISE SPECIFIED.
2. 0.010" RADIUS AT ALL CORNERS UNLESS OTHERWISE SPECIFIED.
3. ALL DIMENSIONS ARE GIVEN IN INCHES.
4. INVENTORY NUMBER. 10790

JOHNSON CONTROLS PART #70-020748-00B

DANIEL J. RAU LICENSE NO. 63636 STATE OF FLORIDA PROFESSIONAL ENGINEER
10/5/2012

FOR OFFICE USE ONLY

Approved as complying with the Florida Building Code
Date 2/14/2013
NOA# 12-1115.05
Miami Dade Product Control
By

CHANGE LETTER	REVISION DESCRIPTION	DWN. BY:	CHK'D. BY:	APPV'D. BY:	APPV'D. BY:	DATE

ENGINEER OF RECORD	DWN. BY:	CHK. BY:	APPV'D. BY:	APPV'D. BY:
DANIEL J. RAU	DRP			
	DATE: 8-20-12	DATE:	DATE:	DATE:

Johnson Controls

PLOT SCALE 1"=1"

ECN 4494
DATE: 8-20-12

ENGINEERING DISCIPLINE
CIVIL ENGINEER

REGISTRATION NUMBER
STATE OF FLORIDA #0063636

MATERIAL: 6063T5 EXTRUDED ALUMINUM, NOM. WALL THICKNESS = .080

TITLE
LH-1250
MOISTURE
BLADE

DWG. NO.
60-022272-00B

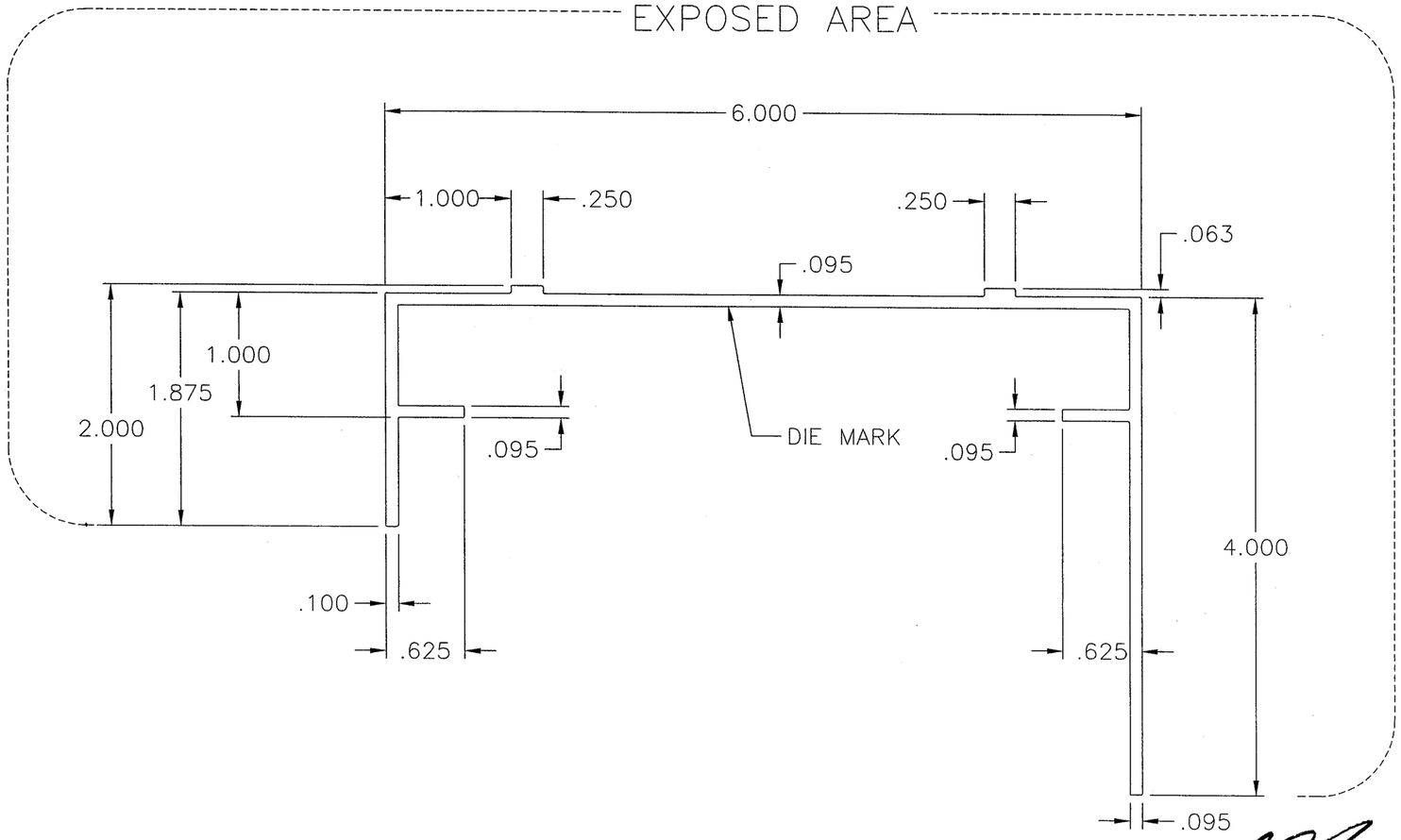

AREA= 1.250 SQ. IN.
PERIMETER= 26.12 IN.
EST. WEIGHT= 1.470 LBS/FT.

NOTES:

1. ALUMINUM ASSOCIATION TOLERANCES APPLY UNLESS OTHERWISE SPECIFIED.
2. 0.010" RADIUS AT ALL CORNERS UNLESS OTHERWISE SPECIFIED.
3. ALL DIMENSIONS ARE GIVEN IN INCHES.
4. INVENTORY NUMBER= 10820.

FOR OFFICE USE ONLY

Approved as complying with the Florida Building Code
Date 2/14/2013
NOA# 12-1115.05
Miami Dade Product Control
By

10/5/2012

JOHNSON CONTROL PART #70-021995-00B

DANIEL J. RAU LICENSE NO. 63636 STATE OF FLORIDA PROFESSIONAL ENGINEER

SHEET 4 OF 38

ENGINEER OF RECORD			
DANIEL J. RAU			
ENGINEERING DISCIPLINE			
CIVIL ENGINEER			
REGISTRATION NUMBER			
STATE OF FLORIDA #0063636			
DWN. BY: DRP	CHK. BY:	APPV'D. BY:	APPV'D. BY:
DATE: 8/20/12	DATE:	DATE:	DATE:

MATERIAL: 6063T6 EXTRUDED ALUMINUM NOM WALL THICKNESS = .095"

CHANGE LETTER	REVISION DESCRIPTION	DWN. BY:	CHK'D. BY:	APPV'D. BY:	APPV'D. BY:	DATE

Johnson Controls

TITLE: LH-1250 LOUVER HEAD FRAME

PLOT SCALE: NONE

ECN 4494
DATE: 8-20-12

DWG. NO.: 60-022272-00B

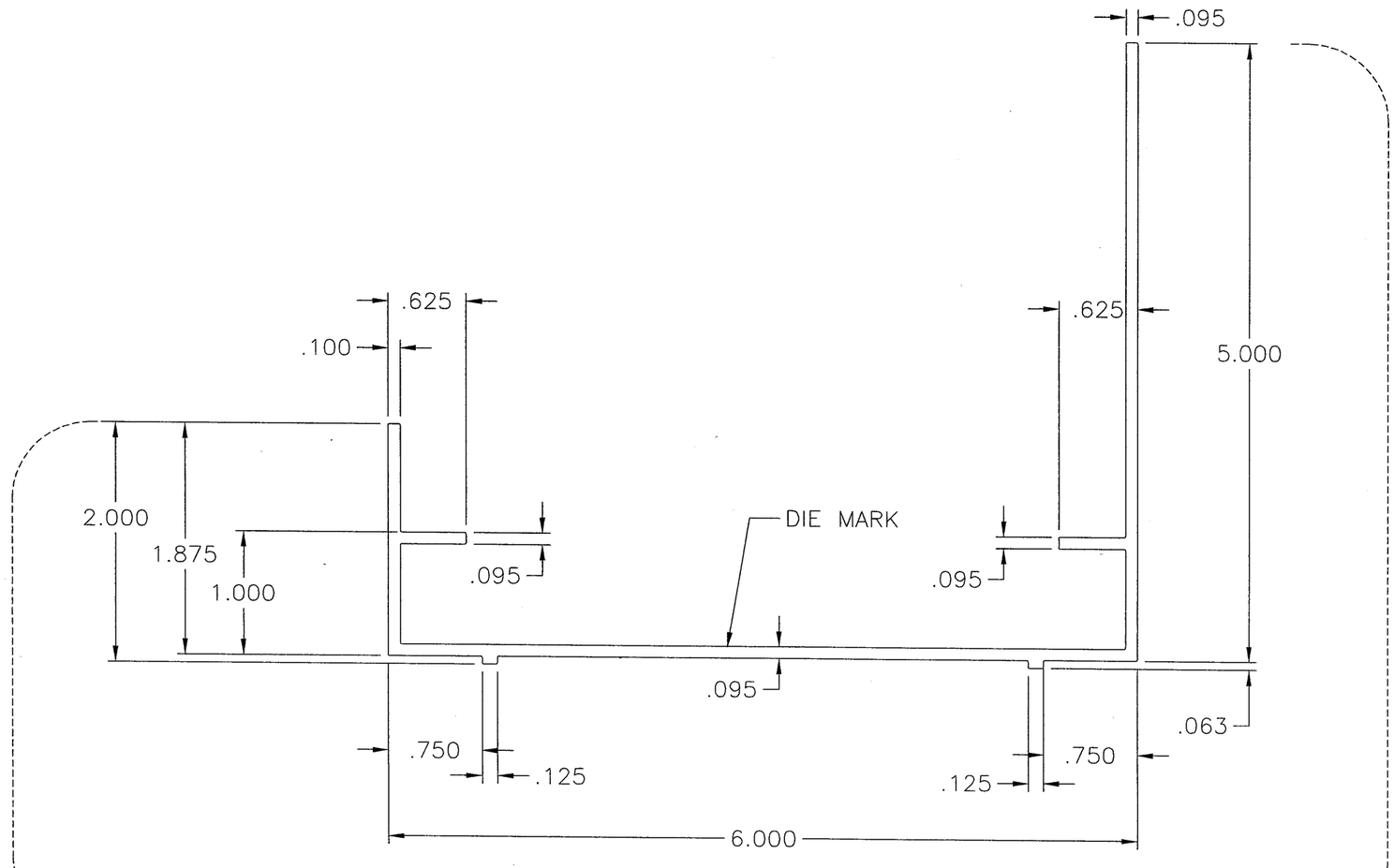

FOR OFFICE USE ONLY

Approved as complying with the Florida Building Code
Date 2/14/2013
NOA# 12-1116.05
Miami Dade Product Control
By

JOHNSON CONTROLS PART #70-020749-00B

AREA= 1.318 SQ. IN.
PERIMETER= 27.948 IN.
EST. WEIGHT= 1.550 LBS/FT.

NOTES:

1. ALUMINUM ASSOCIATION TOLERANCES APPLY UNLESS OTHERWISE SPECIFIED.
2. 0.010" RADIUS AT ALL CORNERS UNLESS OTHERWISE SPECIFIED.
3. ALL DIMENSIONS ARE GIVEN IN INCHES.
4. INVENTORY NUMBER= 10820.

ENGINEER OF RECORD			
DANIEL J. RAU			
ENGINEERING DISCIPLINE			
CIVIL ENGINEER			
REGISTRATION NUMBER			
STATE OF FLORIDA #0063636			
DWN. BY: DRP	CHK. BY:	APPV'D. BY:	APPV'D. BY:
DATE: 8/20/12	DATE:	DATE:	DATE:

DANIEL J. RAU LICENSE NO. 63636 STATE OF FLORIDA PROFESSIONAL ENGINEER

10/5/2012

MATERIAL: 6063T6 EXTRUDED ALUMINUM NOM WALL THICKNESS = .095"

CHANGE LETTER	REVISION DESCRIPTION	DWN. BY:	CHK'D. BY:	APPV'D. BY:	APPV'D. BY:	DATE

Johnson Controls

PLOT SCALE	ECN 4494
NONE	DATE: 8-20-12

TITLE: LH-1250 LOUVER SILL FRAME

DWG. NO.: 60-022272-00B

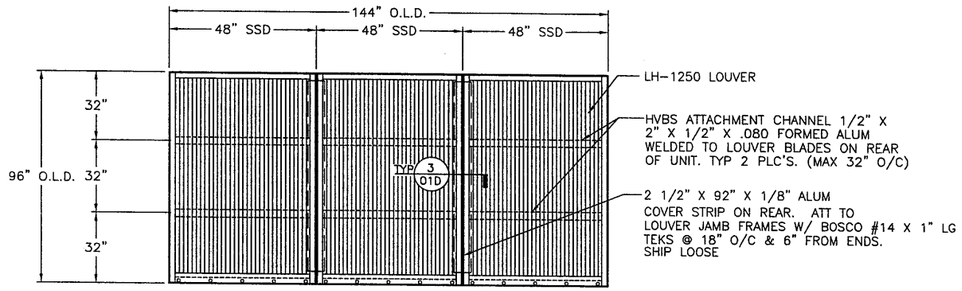

LH-1250 LOUVER ASSEMBLY "B"

NTS — DESIGN PRESSURE RATING: +160/ -140 PSF — FRONT VIEW

SEE SECTION DETAILS FOR APPLICABILITY

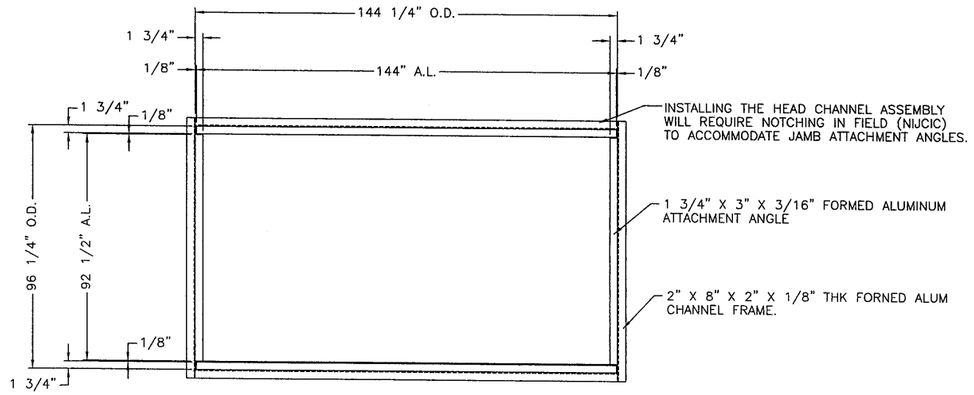

CHANNEL FRAME & ATT ANGLE ELEVATION

REAR VIEW

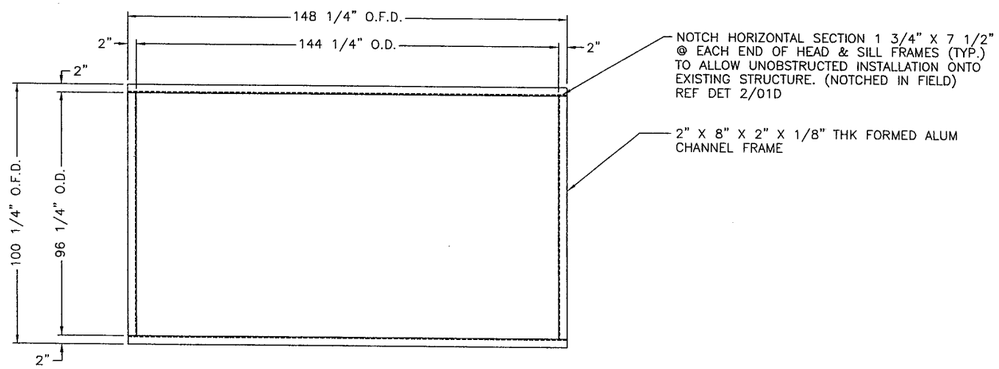

CHANNEL FRAME ELEVATION

FRONT VIEW

1 REAR & FRONT ELEVATIONS VIEW OF CHANNEL FRAME & ATT. ANGLE

N.T.S.

LEGEND:

O.F.D. = OUTSIDE FRAME DIM.	SSD = SHIP SECTION DIM.
R.O. = ROUGH OPENING	L.D. = LOUVER DIM.
A.L. = ANGLE LENGTH	DIM. = DIMENSION
O.D. = OPENING DIM.	SIM = SIMILAR
N.T.S. = NOT TO SCALE	NIJCIC = NOT IN JOHNSON CONTROL INC CONTRACT

NOTES:

- THE STRUCTURAL SUBSTRATE THAT HOLDS THE LOUVER IN PLACE, IS ASSUMED TO BE STRUCTURALLY SOUND AND STABLE TO TAKE THE LOADS DISPERSED BY THE LOUVER.
- LOUVER IS NONBEARING AND IS NOT DESIGNED TO WITHSTAND BUILDING DEADLOADS.

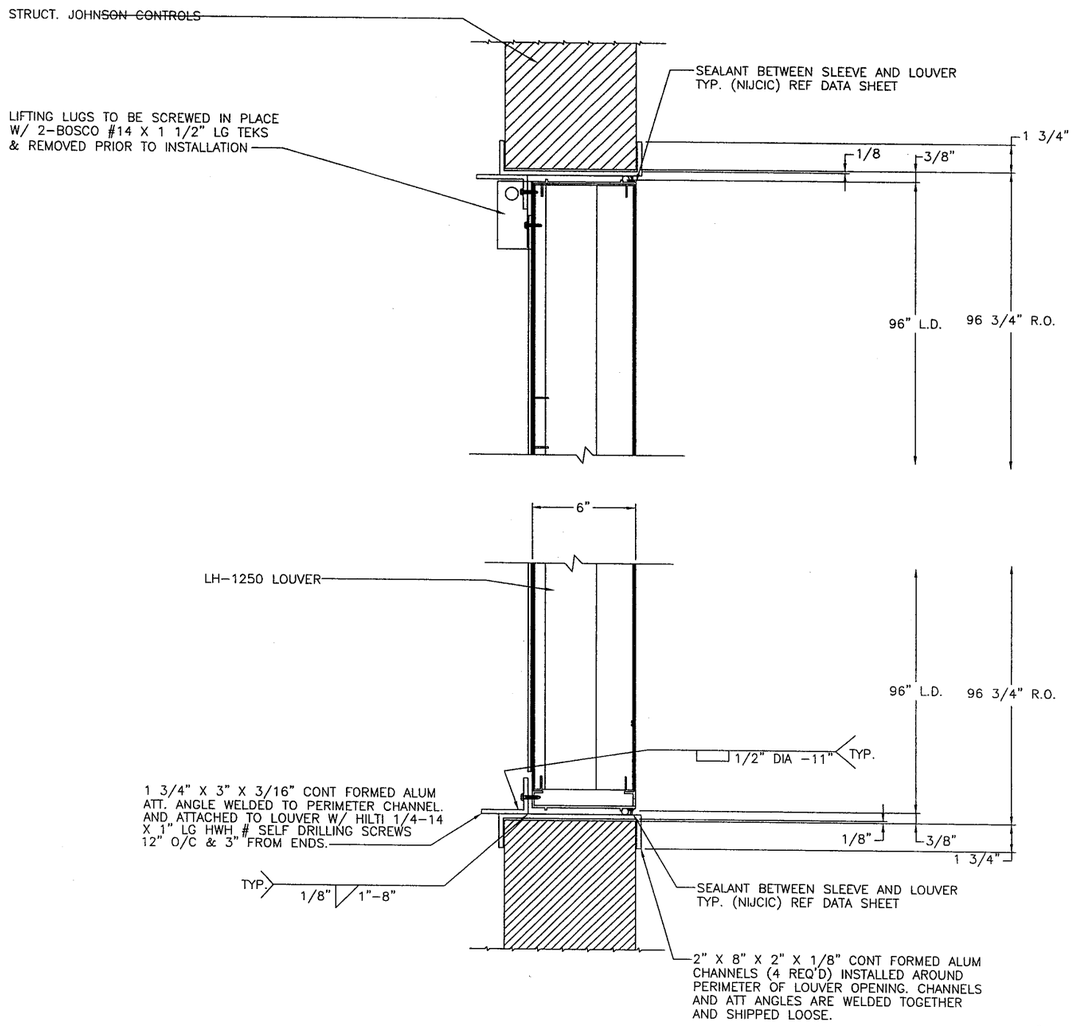

LH-1250/VD-1250 SLEEVED SECTION (JAMB SIM TO HEAD)

3"=1'-0"

FOR OFFICE USE ONLY

Approved as complying with the Florida Building Code
Date 2/14/2013
NOA# 12-1115.05
Miami Dade Product Control
By

10/5/2012

DANIEL J. RAU
LICENSE
NO. 63636
STATE OF FLORIDA
PROFESSIONAL ENGINEER

FOR FASTENER LOADS REF. DWG. 60-022272-06D

ENGINEER OF RECORD	DANIEL J. RAU
ENGINEERING DISCIPLINE	CIVIL ENGINEER
REGISTRATION NUMBER	STATE OF FLORIDA #0063636
DWN. BY: DRP	CHK. BY:
APPV'D. BY:	APPV'D. BY:
DATE: 8-20-12	DATE:
DATE:	DATE:

CHANGE LETTER	REVISION DESCRIPTION	DWN. BY:	CHK'D. BY:	APPV'D. BY:	APPV'D. BY:	DATE

Johnson Controls

PLOT SCALE: NONE

ECN 4494

DATE: 8-20-12

TITLE: LOUVER DAMPER ASSY DADE CTY. FLORIDA

LH-1250 & VD-1250 ASSEMBLIES & SECTIONS

DWG. NO. 60-022272-00D

SHEET 6 OF 38

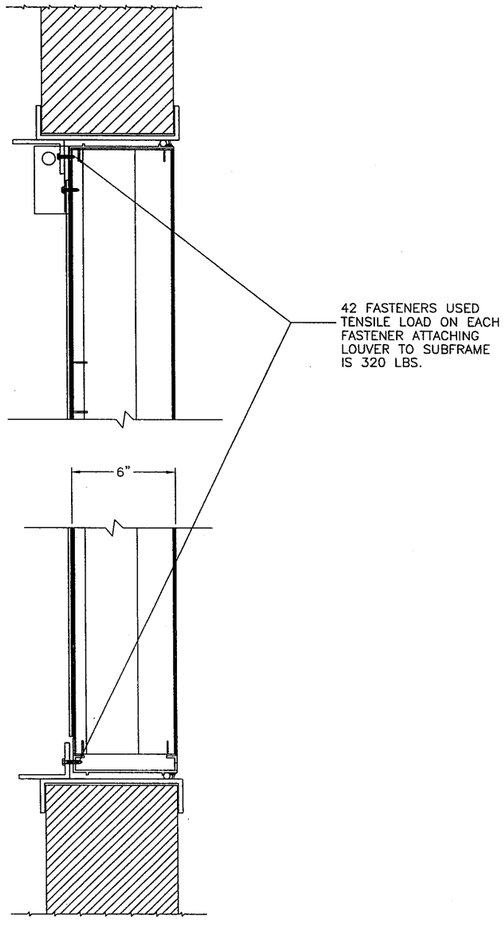

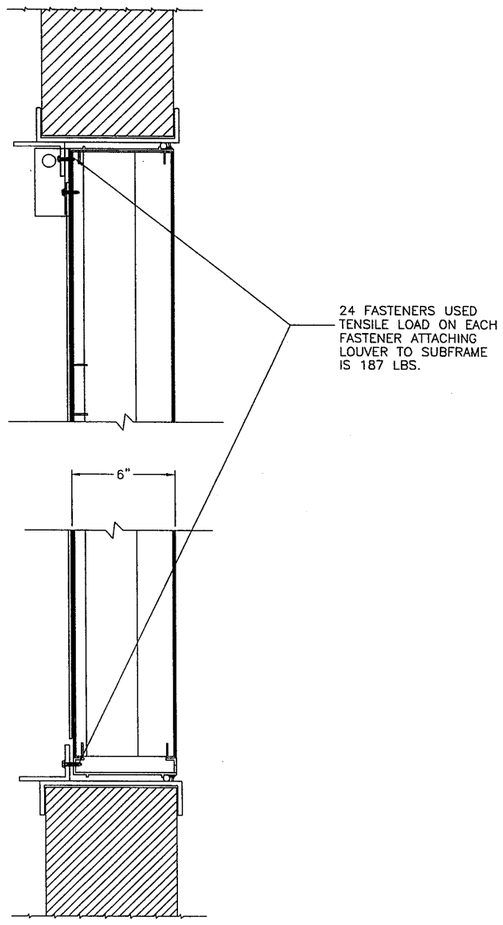

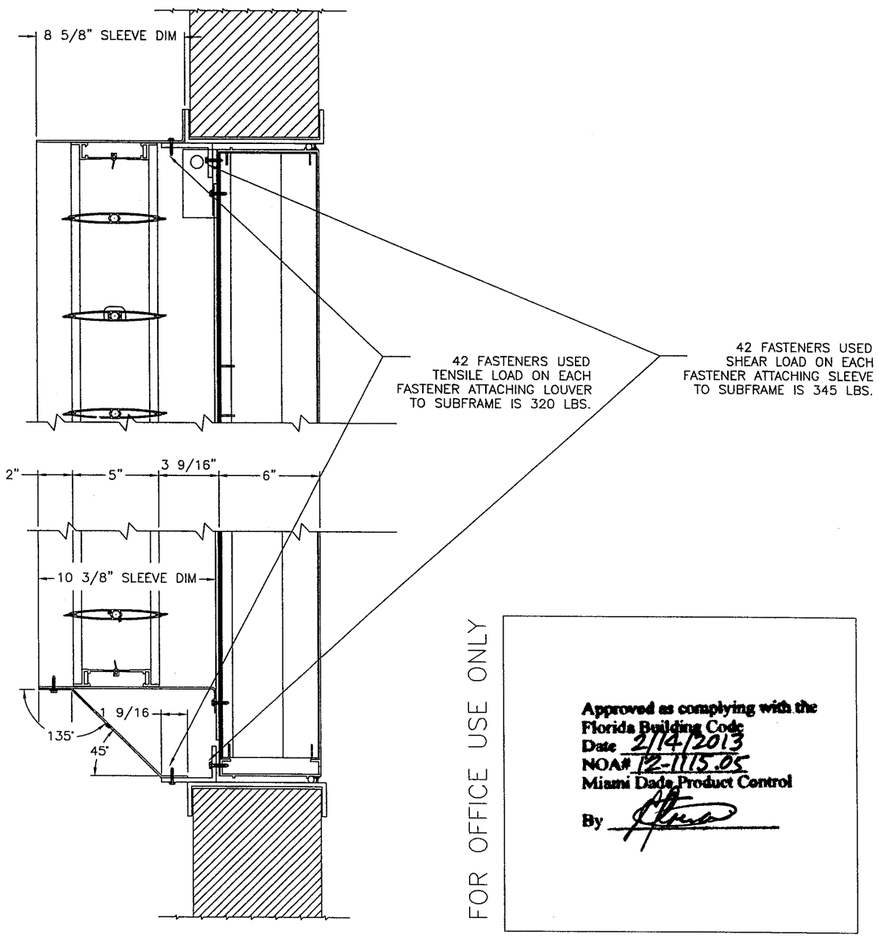

FOR OFFICE USE ONLY

Approved as complying with the
Florida Building Code
Date 2/14/2013
NOA# 12-1115.05
Miami Dade Product Control
By

LOUVER ONLY ASSEMBLIES "B" (+160/ −140 PSF)

N.T.S.

The LH−1250 louver can be installed in locations where space behind the louver is not designed to drain or accept water if ductwork is attached to the rear of the louver. The ductwork must be designed to manage the 7.68 oz. of water penetration allowed during the TAS−100(A) Wind Driven Rain Test. This application is Rated For Water.
If no ductwork is to be installed to the louver, the louver must be installed in locations where the area behind is designed to drain or accept water. This application is Not Rated For Water.

LOUVER ONLY ASSEMBLIES "C" (+160/ −140 PSF)

N.T.S.

The LH−1250 louver can be installed in locations where space behind the louver is not designed to drain or accept water if ductwork is attached to the rear of the louver. The ductwork must be designed to manage the 7.68 oz. of water penetration allowed during the TAS−100(A) Wind Driven Rain Test. This application is Rated For Water.
If no ductwork is to be installed to the louver, the louver must be installed in locations where the area behind is designed to drain or accept water. This application is Not Rated For Water.

LOUVER/DAMPER ASS'Y "A" (+160/ −140PSF)

N.T.S.

CAN BE INSTALLED IN LOCATIONS WHERE SPACE BEHIND LOUVER IS NOT DESIGNED TO ACCEPT WATER.
MEETS WATER REQUIREMENTS

10/5/2012

DANIEL J. RAU
LICENSE
NO. 63636
STATE OF
FLORIDA
PROFESSIONAL ENGINEER

ULTIMATE PULL OUT VALUES FOR 1/4−14 SELF−TAPPING FASTENERS IN 1/8" ALUMINUM IS 825 LBS.(SAFETY FACTOR OF 3.)
ALLOWABLE SHEAR LOAD IS 405 LBS.,
SEE HILTI PRODUCT TECHNICAL GUIDE 8/'96, P136.

THE LH−1250 WITH VD−1250 DAMPER, FURNISHED BY JOHNSON CONTROLS, CONFORM TO THE CURRENT FLORIDA BUILDING CODE INCLUSIVE OF CHAPTER 16.

ENGINEER OF RECORD: DANIEL J. RAU
ENGINEERING DISCIPLINE: CIVIL ENGINEER
REGISTRATION NUMBER: STATE OF FLORIDA #0063636

DWN. BY:	CHK. BY:	APP'D. BY:	APP'D. BY:
DRP			
DATE: 8−20−12	DATE:	DATE:	DATE:

LOUVER DAMPER ASSY
DADE CTY. FLORIDA

CHANGE LETTER	REVISION DESCRIPTION	DWN. BY:	CHK'D. BY:	APP'D. BY:	APP'D. BY:	DATE

Johnson Controls

PLOT SCALE: NONE
ECN 4494
DATE: 8−20−12

TITLE: LH−1250 & VD−1250 FASTENER LOADS

DWG. NO.: 60-022272-00D

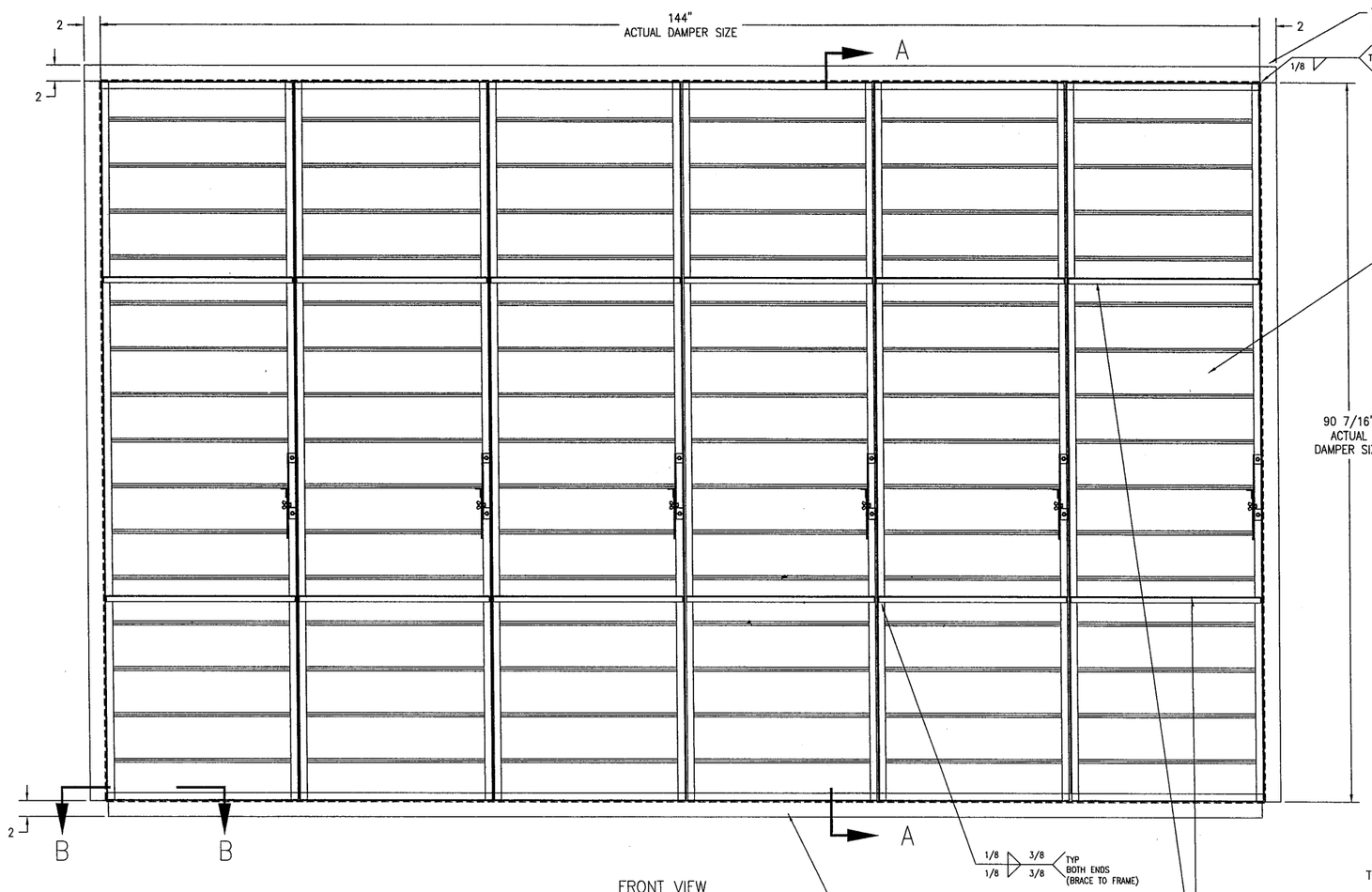

FRONT VIEW

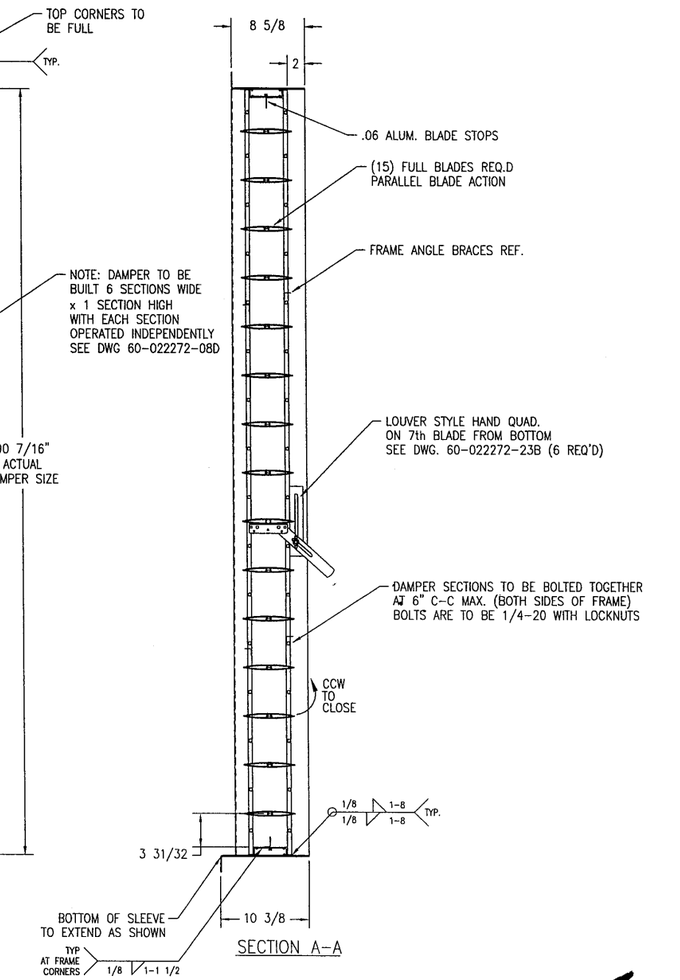

SECTION A-A

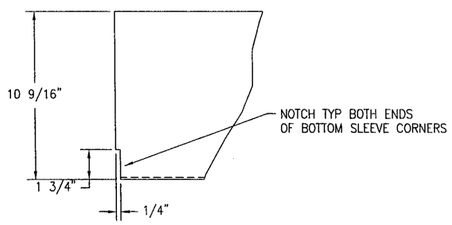

SECTION B-B

FOR OFFICE USE ONLY

Approved as complying with the
Florida Building Code
Date 2/14/2013
NOA# 12-1115.05
Miami Dade Product Control
By

UNLESS OTHERWISE SPECIFIED USE
STANDARD ENGINEERING TOLERANCES

10/5/2012

DANIEL J. RAU
LICENSE
NO. 63636
STATE OF
FLORIDA
PROFESSIONAL ENGINEER

ENGINEER OF RECORD	DANIEL J. RAU
ENGINEERING DISCIPLINE	CIVIL ENGINEER
REGISTRATION NUMBER	STATE OF FLORIDA #0063636
DWN. BY: DRP	CHK. BY:
DATE: 8-20-12	APP'D. BY: / DATE:
APP'D. BY: / DATE:	

CHANGE LETTER	REVISION DESCRIPTION	DWN. BY:	CHK'D. BY:	APP'D. BY:	APP'D. BY:	DATE

Johnson Controls

PLOT SCALE	NONE
ECN	4494
DATE:	8-20-12
DWG. NO.	60-022272-00D

TITLE: LOUVER DAMPER ASSEMBLY
DADE COUNTY, FLORIDA

VD-1250 ASSEMBLY
WITH INTERNAL
HAND QUAD.

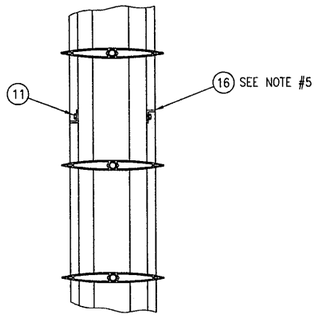

FRAME BRACE DETAIL
UNITS OVER 48" "B" DIM.

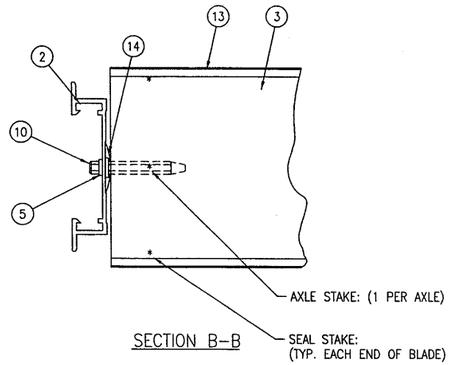

SECTION B–B

ITEM	DWG. NO.	DESCRIPTION
1	60-022272-09B	FRAME: TOP & BOTTOM
2	60-022272-10B	FRAME: SIDE
3	60-022272-11B	BLADE:
4	60-022272-12B	CORNER CLIP:
5	60-022272-14B	BEARING: SYNTHETIC
6	60-022272-20B	TIEBAR: 1/2" WIDE x 12 GA. GALV.
7		TRUARC RING: (PLTD.) E-25
8	60-022272-15B	"F" LINKAGE ASSEMBLY:
9	60-022272-21B	OVERTRAVEL STOP: 16 GA. GALV.
10	60-022272-18B	IDLER AXLE: (PLTD)
11		TEK SCREW: #10 x 3/4" LG. (PLTD)
12		TRUARC RING: (PLTD.) E-50
13	60-022272-13B	BLADE SEAL: SANTOPRENE
14	60-022272-19B	JAMB SEAL: STN. STL.
15		TRAVEL STOP: 1 1/4"X 1"X 3/4"X .06 ALUM.
16	Ⓓ	FRAME BRACE: 3/4" x 3/4" x 1/8" thk. ALUM. ANGLE
17		
18		
18		
20		
21		
22		
23		
24		
25		

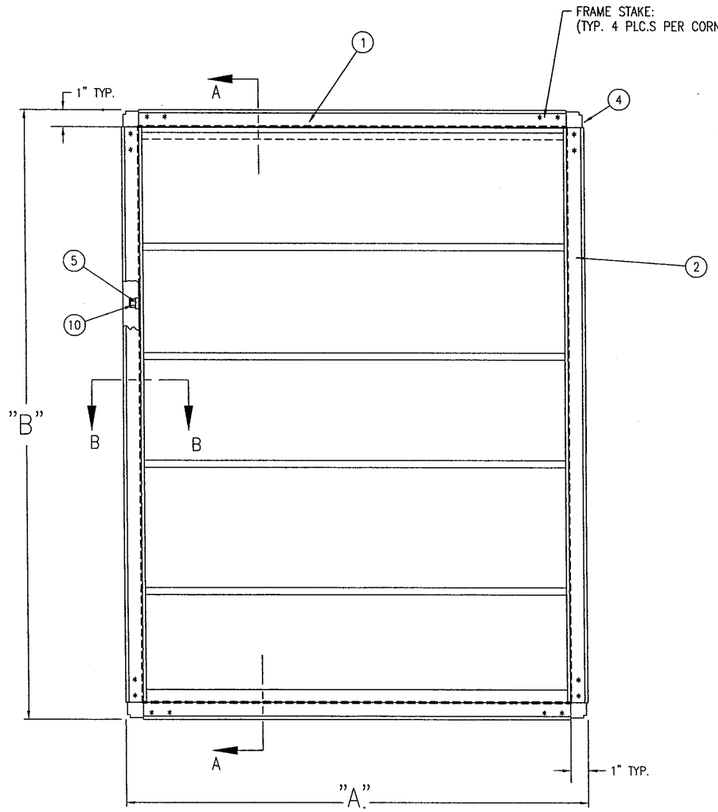

FACE VIEW
SHOWN CLOSED

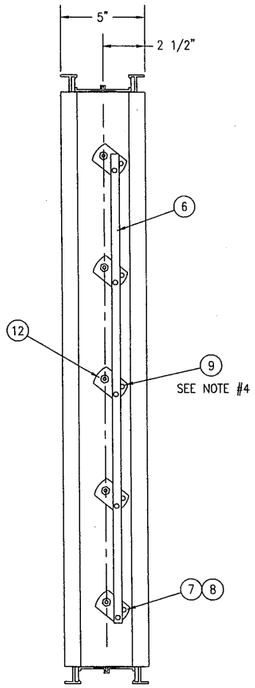

RIGHT SIDE VIEW
PARALLEL BLADE
SHOWN CLOSED

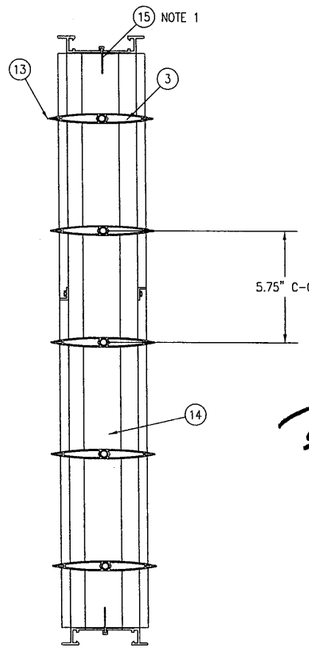

SECTION A–A
SHOWN OPEN

NOTES:

1. TRAVEL STOP (ITEM 15) TO BE CENTERED ALONG BLADE LENGTH WITH 1" LEG ATTACHED TO FRAME BY 1/16" WELDS, # 10 TEK SCREWS OR 3/16" RIVETS. 1 1/4" LEG TO BE 1/16" AWAY FROM BLADE IN FULLY CLOSED POSITION.
2. BLADE LENGTH TO BE 9/32" LESS THAN INSIDE FRAME DIM.
3. FRAMES TO BE CAULKED AT CORNERS.
4. ONE OVER TRAVEL STOP (ITEM 9) REQUIRED ON P.B. DAMPERS ONLY.
5. FRAME BRACE (ITEM #16) IS REQUIRED ON ALL UNITS ABOVE 48" 'B' DIMENSION, LOCATED APPROXIMATELY CENTER OF DAMPER FRONT AND BACK SIDES.

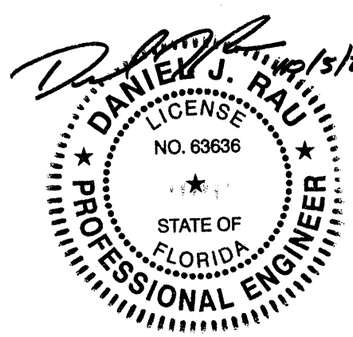

FOR OFFICE USE ONLY

Approved as complying with the Florida Building Code
Date 2/4/2013
NOA# 12-1115.05
Miami Dade Product Control
By

UNLESS OTHERWISE SPECIFIED USE STANDARD ENGINEERING TOLERANCES

ENGINEER OF RECORD	DANIEL J. RAU
ENGINEERING DISCIPLINE	CIVIL ENGINEER
REGISTRATION NUMBER	STATE OF FLORIDA #0063636
DWN. BY: DRP	CHK. BY:
DATE: 8/20/12	APP'D. BY:
DATE:	APP'D. BY:
DATE:	DADE COUNTY, FLORIDA

CHANGE LETTER	REVISION DESCRIPTION	DWN. BY:	CH'K'D. BY:	APP'D. BY:	APP'D. BY:	DATE
	Johnson Controls					

PLOT SCALE: NONE
ECN 4494
DATE: 8-20-12

TITLE: VD-1250 STANDARD DAMPER ASSEMBLY

DWG. NO.: 60-022272-00D

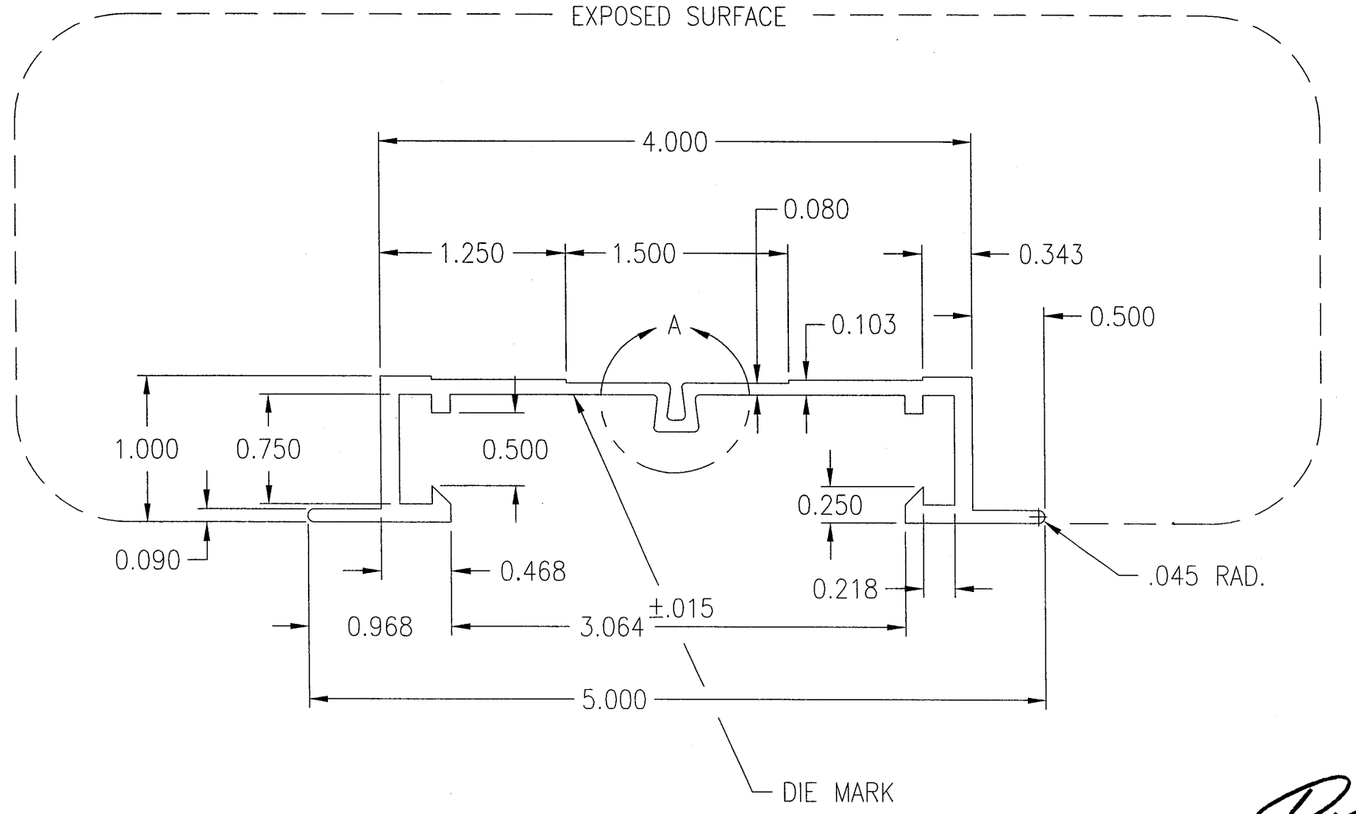

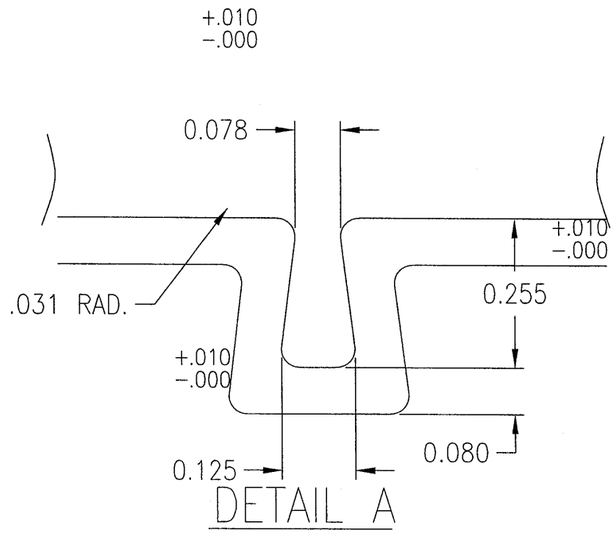

NOTES:

1. ALUMINUM ASSOC. TOLERANCES APPLY UNLESS NOTED OTHERWISE
2. MAX. RISE AT CORNERS OF 4" WEB TO BE NO GREATER THAN .020

ENGINEER OF RECORD: DANIEL J. RAU			
ENGINEERING DISCIPLINE: CIVIL ENGINEER			
REGISTRATION NUMBER: STATE OF FLORIDA #0063636			
DWN. BY: DRP	CHK. BY:	APPV'D. BY:	APPV'D. BY:
DATE: 8-20-12	DATE:	DATE:	DATE:
MAT'L. 6063-T52 EXTRUDED ALUMINUM TYP. WALL THK. .125 UNLESS NOTED			

DANIEL J. RAU
LICENSE
NO. 63636
STATE OF FLORIDA
PROFESSIONAL ENGINEER
10/5/2012

FOR OFFICE USE ONLY

Approved as complying with the Florida Building Code
Date 2/14/2013
NOA# 12-1115.05
Miami Dade Product Control
By

SHEET 10 OF 38

CHANGE LETTER	REVISION DESCRIPTION	DWN. BY:	CHK'D. BY:	APPV'D. BY:	APPV'D. BY:	DATE

Johnson Controls

PLOT SCALE: NONE

ECN 4494
DATE: 8-20-12

TITLE: VD-1250 TOP AND BOTTOM FRAME

DWG. NO.: 60-022272-00B

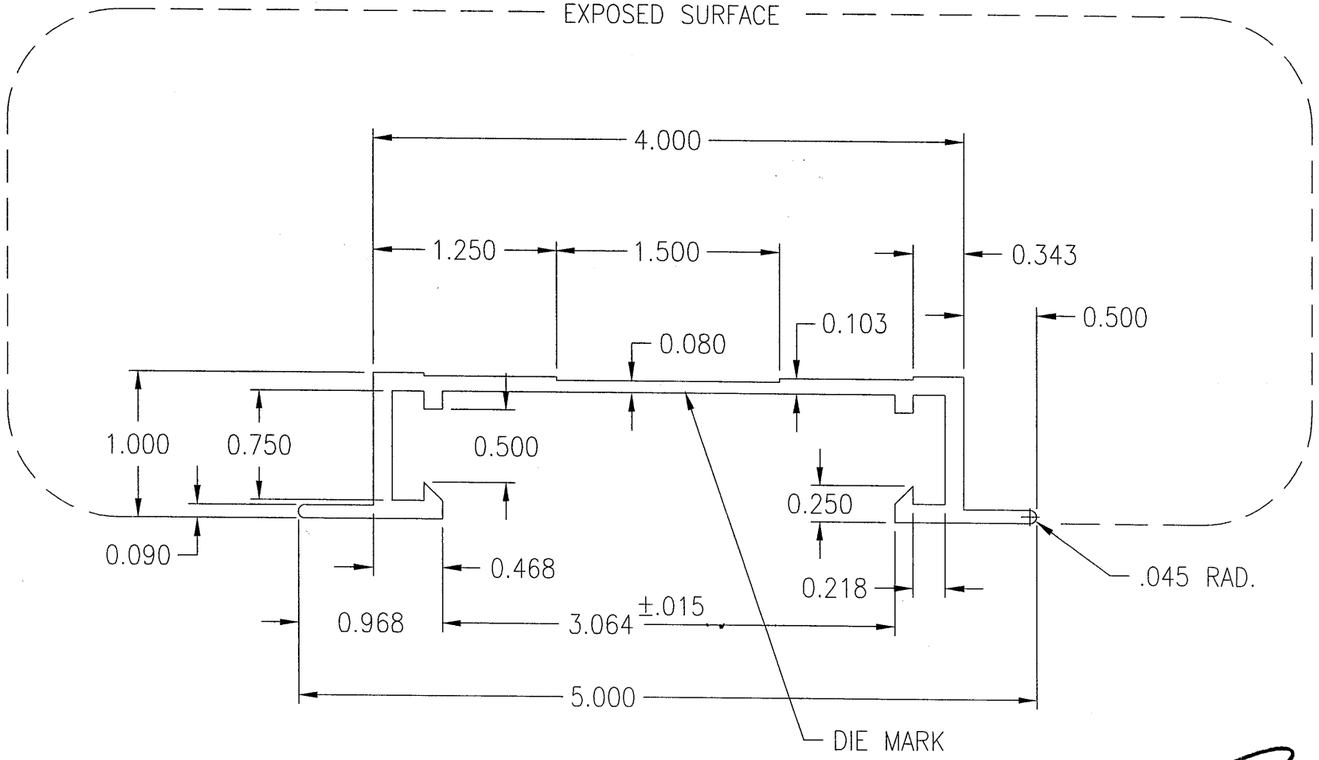

NOTES:

1. ALUMINUM ASSOC. TOLERANCES APPLY UNLESS NOTED OTHERWISE
2. MAX. RISE AT CORNERS OF 4" WEB TO BE NO GREATER THAN .020

FOR OFFICE USE ONLY

Approved as complying with the Florida Building Code
Date 02/14/2013
NOA# 12-1115.05
Miami Dade Product Control
By

DANIEL J. RAU 2/14/2013
LICENSE NO. 63636
STATE OF FLORIDA
PROFESSIONAL ENGINEER

SHEET 11 OF 38

ENGINEER OF RECORD	DANIEL J. RAU
ENGINEERING DISCIPLINE	CIVIL ENGINEER
REGISTRATION NUMBER	STATE OF FLORIDA #0063636

DWN. BY:	CHK. BY:	APPV'D. BY:	APPV'D. BY:
DRP			
DATE: 8-20-12	DATE:	DATE:	DATE:

MAT'L. 6063-T52 EXTRUDED ALUMINUM
TYP. WALL THK. .125 UNLESS NOTED

CHANGE LETTER	REVISION DESCRIPTION	DWN. BY:	CHK'D. BY:	APPV'D. BY:	APPV'D. BY:	DATE

Johnson Controls

PLOT SCALE	ECN / DATE
NONE	ECN 4494 DATE: 8-20-12

TITLE
VD-1250
SIDE FRAME

DWG. NO.
60-021563-00B

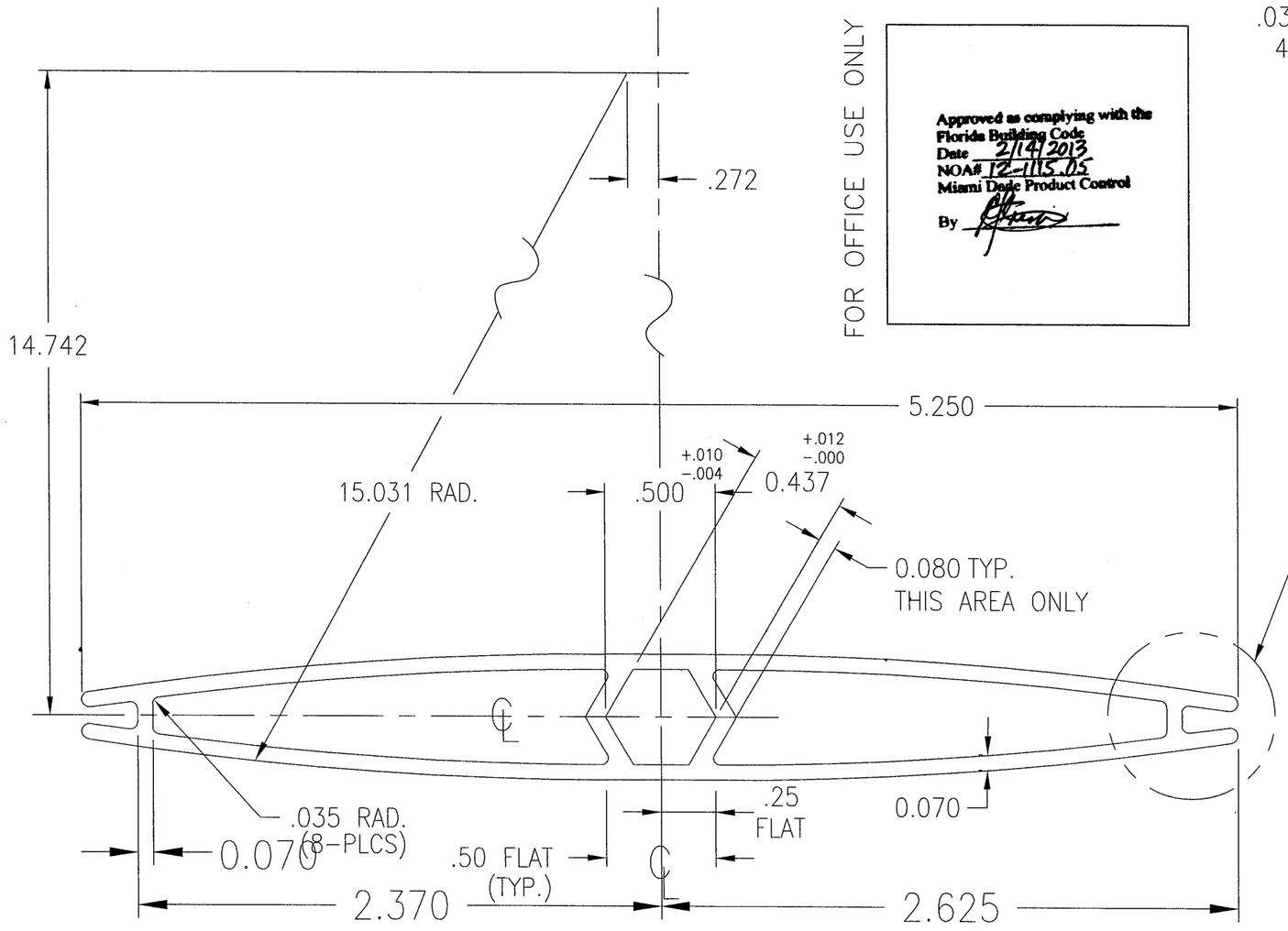

SCALE: 1.5X

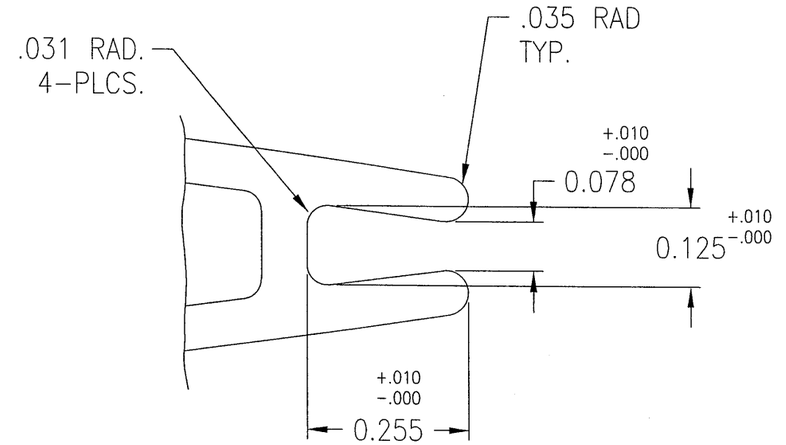

DETAIL A
SCALE: 4X

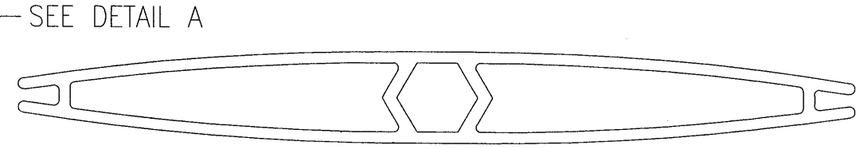

ACTUAL SIZE

NOTE:
1. USE STANDARD ALUMINUM ASSOCIATION TOLERANCES WILL APPLY UNLESS OTHERWISE SPECIFED.

TOLERANCES:
UNLESS OTHERWISE SPECIFIED
DIMENSIONS:
WITH 2 DECIMAL PLACES. ±.020
WITH 3 DECIMAL PLACES, ±.010
FRACTION DIMENSIONS AS MARKED.

FOR OFFICE USE ONLY

Approved as complying with the Florida Building Code
Date 2/14/2013
NOA# 12-1115.05
Miami Dade Product Control
By

ENGINEER OF RECORD
DANIEL J. RAU

ENGINEERING DISCIPLINE
CIVIL ENGINEER

REGISTRATION NUMBER
STATE OF FLORIDA #0063636

DWN. BY: DRP	CHK. BY:	APPV'D. BY:	APPV'D. BY:
DATE: 8-20-12	DATE:	DATE:	DATE:

MAT'L. 6063-T5 EXTRUDED ALUMINUM

DANIEL J. RAU
10/15/2012
LICENSE NO. 63636
STATE OF FLORIDA
PROFESSIONAL ENGINEER

CHANGE LETTER	REVISION DESCRIPTION	DWN. BY:	CHK'D. BY:	APPV'D. BY:	APPV'D. BY:	DATE

Johnson Controls

PLOT SCALE: NONE

ECN 4494
DATE: 8-20-12

TITLE
VD-1250
BLADE

DWG. NO.
60-022272-00B

SHEET 12 OF 38

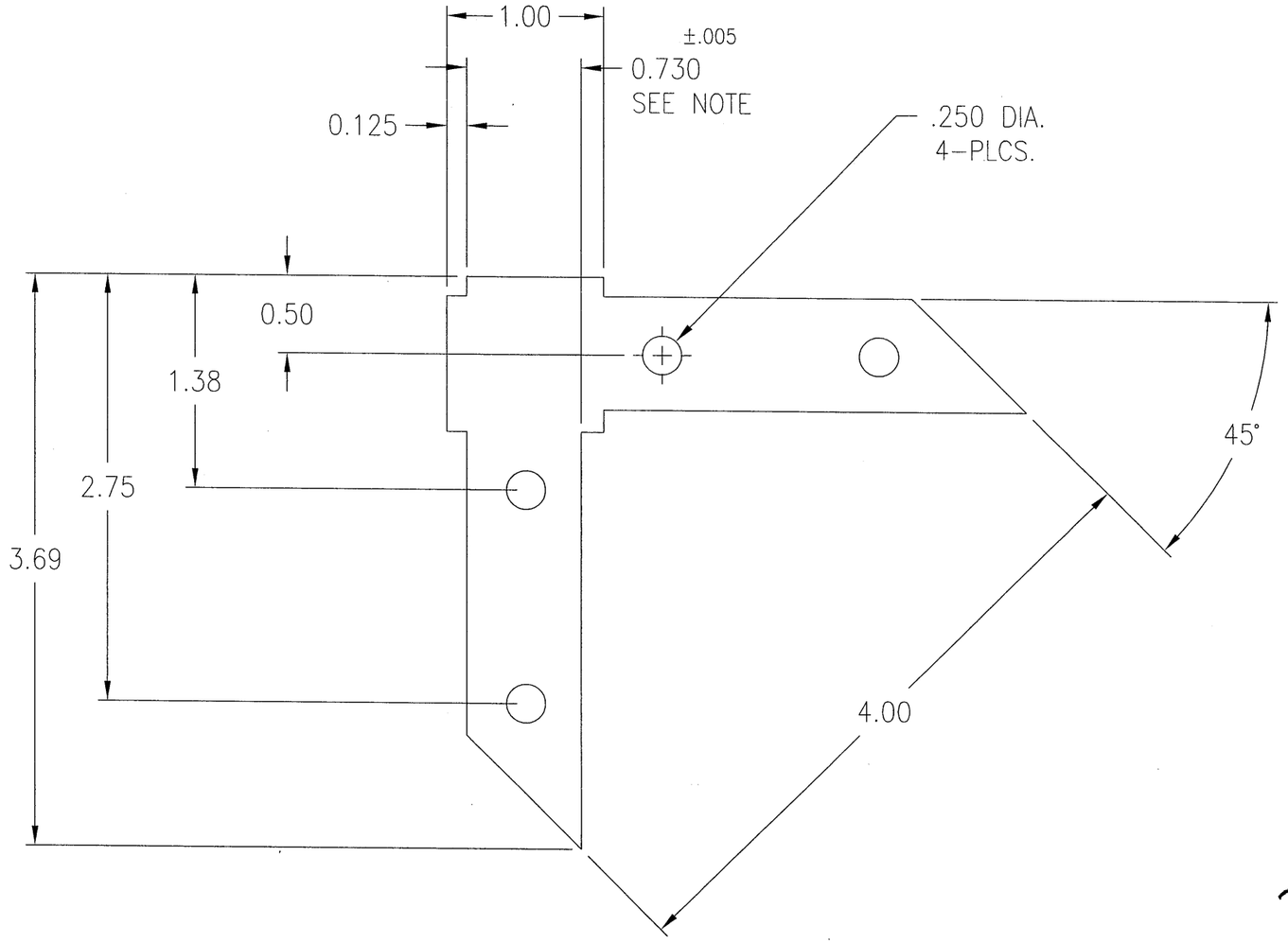

NOTE:
1. .730 DIMENSION IS CRITICAL.

TOLERANCES:
UNLESS OTHERWISE SPECIFIED
DIMENSIONS:
WITH 2 DECIMAL PLACES. ±.020
WITH 3 DECIMAL PLACES, ±.010
FRACTION DIMENSIONS AS MARKED.

ENGINEER OF RECORD: DANIEL J. RAU			
ENGINEERING DISCIPLINE: CIVIL ENGINEER			
REGISTRATION NUMBER: STATE OF FLORIDA #0063636			
DWN. BY: DRP	CHK. BY:	APPV'D. BY:	APPV'D. BY:
DATE: 8-20-12	DATE:	DATE:	DATE:
MAT'L. .208 THK. ALUMINUM 6063-T52			

10/5/2012

DANIEL J. RAU
LICENSE
NO. 63636
STATE OF
FLORIDA
PROFESSIONAL ENGINEER

FOR OFFICE USE ONLY

Approved as complying with the Florida Building Code
Date 2/14/2013
NOA# 12-1115.05
Miami Dade Product Control
By

SHEET 13 OF 38

CHANGE LETTER	REVISION DESCRIPTION	DWN. BY:	CHK'D. BY:	APPV'D. BY:	APPV'D. BY:	DATE

Johnson Controls

PLOT SCALE: NONE

ECN 4494
DATE: 8-20-12

TITLE: ALUM. FRAME CORNER CLIP

DWG. NO. 60-022272-00B

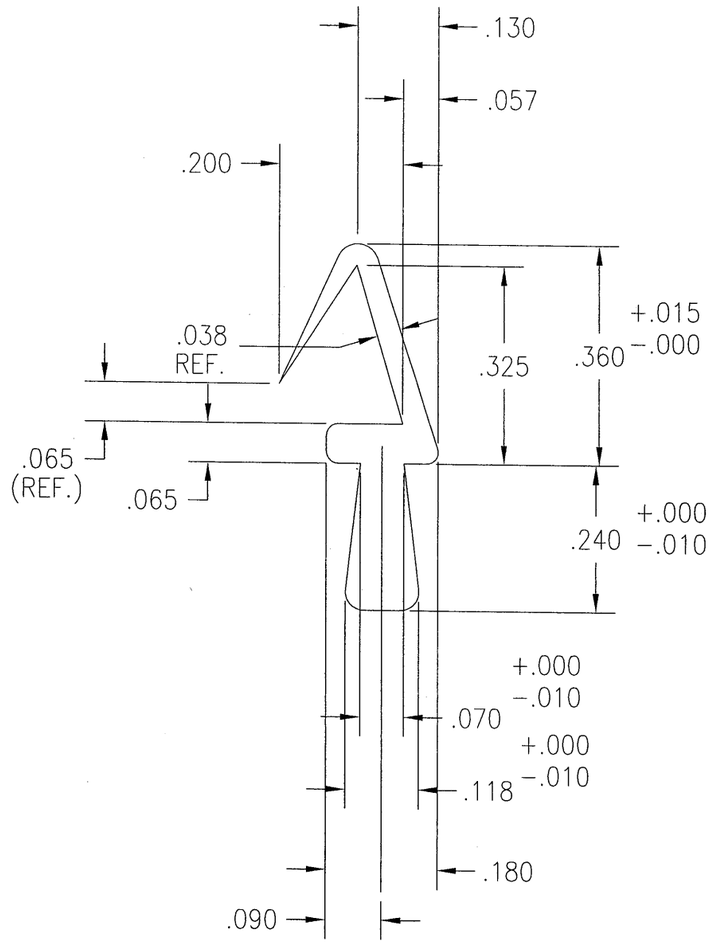

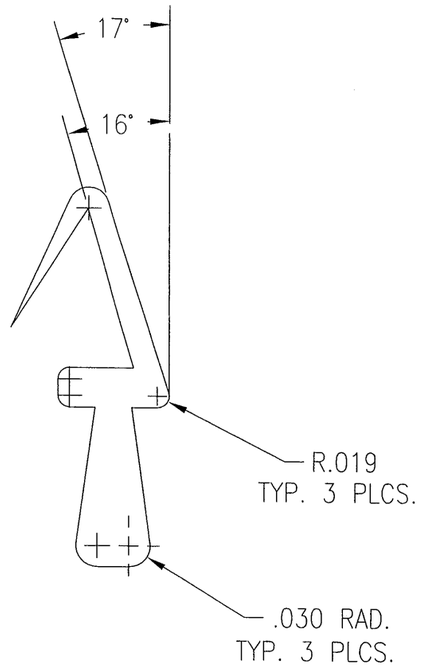

ACTUAL SIZE

4 x SIZE

NOTE: 1. BLADE SEAL IS TO BE USED ON: VD-1250 & VD-1240

TOLERANCES:
UNLESS OTHERWISE SPECIFIED
DIMENSIONS:
WITH 2 DECIMAL PLACES. ±.020
WITH 3 DECIMAL PLACES, ±.010
FRACTION DIMENSIONS AS MARKED.

ENGINEER OF RECORD: DANIEL J. RAU			
ENGINEERING DISCIPLINE: CIVIL ENGINEER			
REGISTRATION NUMBER: STATE OF FLORIDA #0063636			
DWN. BY: DRP	CHK. BY:	APPV'D. BY:	APPV'D. BY:
DATE: 8-20-12	DATE:	DATE:	DATE:

MATERIAL: SANTOPRENE (65 DURO)
REED MATERIAL XSA65-591

DANIEL J. RAU 10/5/2012
LICENSE NO. 63636
STATE OF FLORIDA
PROFESSIONAL ENGINEER

FOR OFFICE USE ONLY

Approved as complying with the Florida Building Code
Date 2/14/2013
NOA# 12-1115.05
Miami Dade Product Control
By

SHEET 14 OF 38

CHANGE LETTER	REVISION DESCRIPTION	DWN. BY:	CHK'D. BY:	APPV'D. BY:	APPV'D. BY:	DATE

Johnson Controls

PLOT SCALE: NONE

ECN 4494
DATE: 8-20-12

TITLE: CONTROL DAMPER BLADE SEAL

DWG. NO.: 60-022272-00B

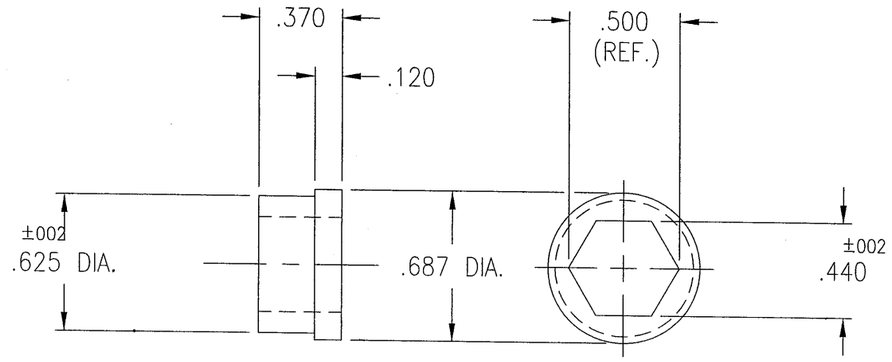

FOR OFFICE USE ONLY

Approved as complying with the Florida Building Code
Date 2/14/2013
NOA# 12-1115.03
Miami Dade Product Control
By

10/15/2012

DANIEL J. RAU
LICENSE
NO. 63636
STATE OF FLORIDA
PROFESSIONAL ENGINEER

TOLERANCES:
UNLESS OTHERWISE SPECIFIED DIMENSIONS:
WITH 2 DECIMAL PLACES. ±.020
WITH 3 DECIMAL PLACES, ±.010
FRACTION DIMENSIONS AS MARKED.

ENGINEER OF RECORD: DANIEL J. RAU			
ENGINEERING DISCIPLINE: CIVIL ENGINEER			
REGISTRATION NUMBER: STATE OF FLORIDA #0063636			
DWN. BY: DRP	CHK. BY:	APPV'D. BY:	APPV'D. BY:
DATE: 8-20-12	DATE:	DATE:	DATE:
MAT'L. LEXAN GE141			

CHANGE LETTER	REVISION DESCRIPTION	DWN. BY:	CHK'D. BY:	APPV'D. BY:	APPV'D. BY:	DATE

Johnson Controls

PLOT SCALE: NONE	ECN 4494 DATE: 8-20-12
TITLE: BEARING, AXLE .370 LG W/.120 FLANGE	DWG. NO. 60-022272-00B

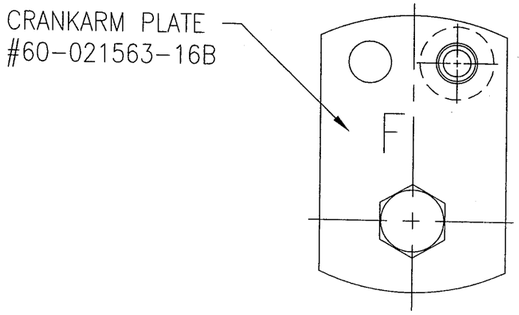

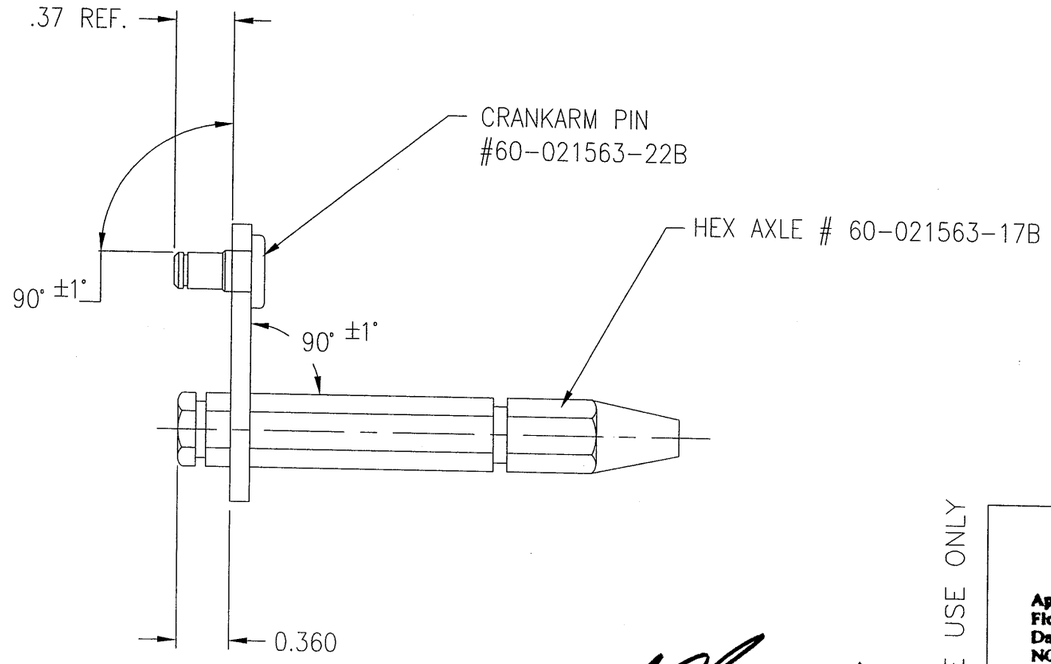

NOTE:

1. "F" INDICATES PIN IS IN RIGHT HAND HOLE.

TOLERANCES:
UNLESS OTHERWISE SPECIFIED
DIMENSIONS:
WITH 2 DECIMAL PLACES. ±.020
WITH 3 DECIMAL PLACES, ±.010
FRACTION DIMENSIONS AS MARKED.

10/5/2012

DANIEL J. RAU
LICENSE
NO. 63636
STATE OF FLORIDA
PROFESSIONAL ENGINEER

FOR OFFICE USE ONLY

Approved as complying with the
Florida Building Code
Date 2/14/2013
NOA# 12-1115.05
Miami Dade Product Control
By

SHEET 16 OF 38

ENGINEER OF RECORD: DANIEL J. RAU				
ENGINEERING DISCIPLINE: CIVIL ENGINEER				
REGISTRATION NUMBER: STATE OF FLORIDA #0063636				
DWN. BY: DRP	CHK. BY:	APPV'D. BY:	APPV'D. BY:	
DATE: 8-20-12	DATE:	DATE:	DATE:	
PLTD. STL.				

CHANGE LETTER	REVISION DESCRIPTION	DWN. BY:	CHK'D. BY:	APPV'D. BY:	APPV'D. BY:	DATE
	Johnson Controls					

TITLE: "F" SIDE LINKAGE CRANK-ARM ASSY	DWG. NO. 60-022272-00B
PLOT SCALE: NONE	ECN 4494 DATE: 8-20-12

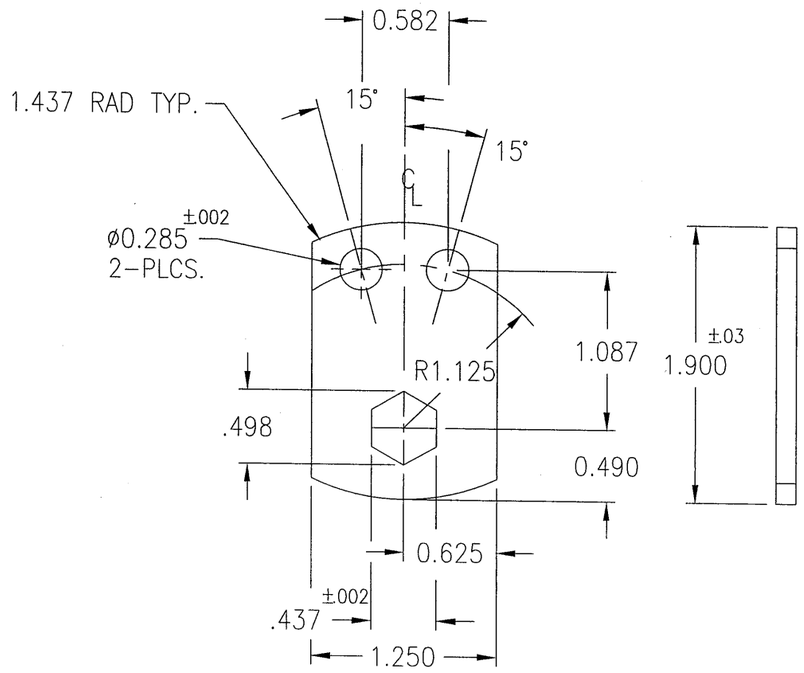

NOTE: HEX ROTATION ALIGNMENT
± 1/2° WITH PLATE EDGE.

TOLERANCES:
UNLESS OTHERWISE SPECIFIED
DIMENSIONS:
WITH 2 DECIMAL PLACES. ±.020
WITH 3 DECIMAL PLACES, ±.010
FRACTION DIMENSIONS AS MARKED.

ENGINEER OF RECORD: DANIEL J. RAU			
ENGINEERING DISCIPLINE: CIVIL ENGINEER			
REGISTRATION NUMBER: STATE OF FLORIDA #0063636			
DWN. BY: DRP	CHK. BY:	APPV'D. BY:	APPV'D. BY:
DATE: 8-20-12	DATE:	DATE:	DATE:
10 GA. GALV.			

10/5/2012

DANIEL J. RAU
LICENSE
NO. 63636
STATE OF FLORIDA
PROFESSIONAL ENGINEER

FOR OFFICE USE ONLY

Approved as complying with the Florida Building Code
Date 2/14/2013
NOA# 12-1115.05
Miami Dade Product Control
By

SHEET 17 OF 38

CHANGE LETTER	REVISION DESCRIPTION	DWN. BY:	CHK'D. BY:	APPV'D. BY:	APPV'D. BY:	DATE
	Johnson Controls	PLOT SCALE: NONE		ECN 4494 DATE: 8-20-12		
	TITLE: CONCEALED LINKAGE PLATE	DWG. NO.: 60-022272-00B				

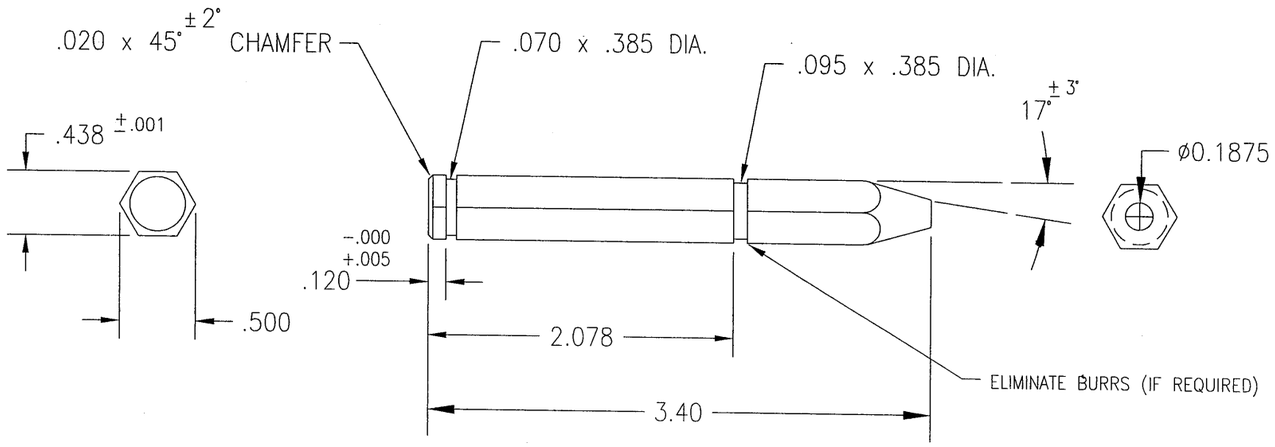

TOLERANCES:
UNLESS OTHERWISE SPECIFIED
DIMENSIONS:
WITH 2 DECIMAL PLACES. ±.020
WITH 3 DECIMAL PLACES, ±.010
FRACTION DIMENSIONS AS MARKED.

10/5/2012

DANIEL J. RAU
LICENSE
NO. 63636
STATE OF FLORIDA
PROFESSIONAL ENGINEER

FOR OFFICE USE ONLY

Approved as complying with the Florida Building Code
Date 2/14/2013
NOA# 12-1115.05
Miami Dade Product Control
By

SHEET 18 OF 38

ENGINEER OF RECORD	DANIEL J. RAU
ENGINEERING DISCIPLINE	CIVIL ENGINEER
REGISTRATION NUMBER	STATE OF FLORIDA #0063636

DWN. BY:	CHK. BY:	APPV'D. BY:	APPV'D. BY:
DRP			
DATE: 8-20-12	DATE:	DATE:	DATE:

7/16" HEX STL. ZINC PLTD

CHANGE LETTER	REVISION DESCRIPTION	DWN. BY:	CHK'D. BY:	APPV'D. BY:	APPV'D. BY:	DATE

Johnson Controls

TITLE: 7/6" HEX AXLE

PLOT SCALE: NONE

ECN 4494
DATE: 8-20-12

DWG. NO.: 60-022272-00B

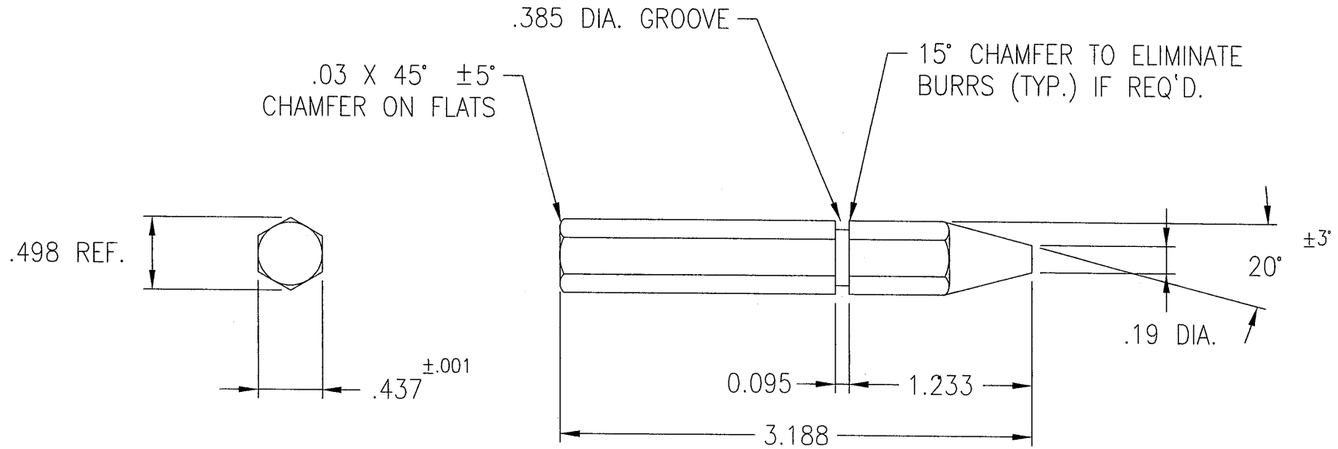

TOLERANCES:
UNLESS OTHERWISE SPECIFIED
DIMENSIONS:
WITH 2 DECIMAL PLACES. ±.020
WITH 3 DECIMAL PLACES, ±.010
FRACTION DIMENSIONS AS MARKED.

ENGINEER OF RECORD: DANIEL J. RAU			
ENGINEERING DISCIPLINE: CIVIL ENGINEER			
REGISTRATION NUMBER: STATE OF FLORIDA #0063636			
DWN. BY: DRP	CHK. BY:	APPV'D. BY:	APPV'D. BY:
DATE: 8-20-12	DATE:	DATE:	DATE:

7/16" HEX STL. ZINC PLTD

DANIEL J. RAU
LICENSE
NO. 63636
STATE OF FLORIDA
PROFESSIONAL ENGINEER
10/15/2012

FOR OFFICE USE ONLY

Approved as complying with the Florida Building Code
Date 2/14/2013
NOA# 12-1115.05
Miami Dade Product Control
By

SHEET 19 OF 38

CHANGE LETTER	REVISION DESCRIPTION	DWN. BY:	CHK'D. BY:	APPV'D. BY:	APPV'D. BY:	DATE

Johnson Controls

PLOT SCALE: NONE

ECN 4494
DATE: 8-20-12

TITLE: 7/16" HEX IDLER AXLE

DWG. NO.: 60-022272-00B

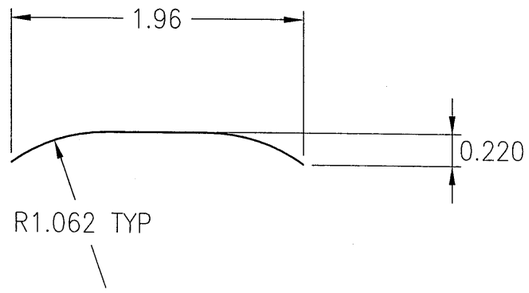

TOLERANCES:
UNLESS OTHERWISE SPECIFIED DIMENSIONS:
WITH 2 DECIMAL PLACES. ±.020
WITH 3 DECIMAL PLACES, ±.010
FRACTION DIMENSIONS AS MARKED.

ENGINEER OF RECORD: DANIEL J. RAU			
ENGINEERING DISCIPLINE: CIVIL ENGINEER			
REGISTRATION NUMBER: STATE OF FLORIDA #0063636			
DWN. BY: DRP	CHK. BY:	APPV'D. BY:	APPV'D. BY:
DATE: 8-20-12	DATE:	DATE:	DATE:

MAT'L. .007" THK. TYPE
301 STN. STL. SPRING

DANIEL J. RAU LICENSE NO. 63636 STATE OF FLORIDA PROFESSIONAL ENGINEER
10/15/2012

FOR OFFICE USE ONLY

Approved as complying with the Florida Building Code
Date 2/14/2013
NOA# 12-1115.05
Miami Dade Product Control
By

SHEET 20 OF 38

CHANGE LETTER	REVISION DESCRIPTION	DWN. BY:	CHK'D. BY:	APPV'D. BY:	APPV'D. BY:	DATE

Johnson Controls

PLOT SCALE: NONE

ECN 4494
DATE: 8-20-12

TITLE: JAMB SEAL

DWG. NO.: 60-022272-00B

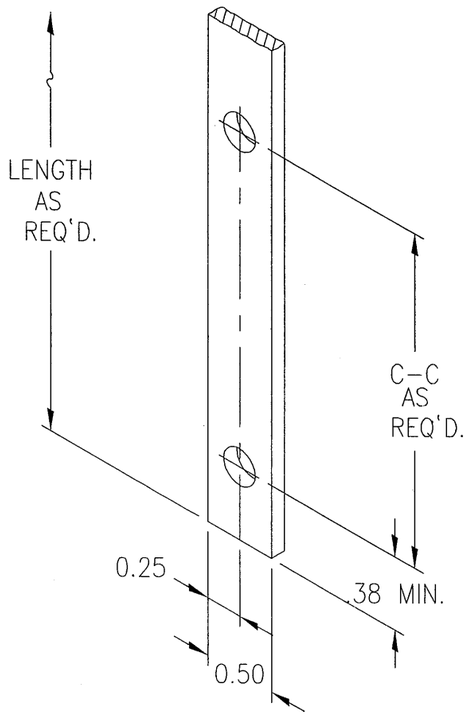

TOLERANCES:
UNLESS OTHERWISE SPECIFIED
DIMENSIONS:
WITH 2 DECIMAL PLACES. ±.020
WITH 3 DECIMAL PLACES, ±.010
FRACTION DIMENSIONS AS MARKED.

ENGINEER OF RECORD			
DANIEL J. RAU			
ENGINEERING DISCIPLINE			
CIVIL ENGINEER			
REGISTRATION NUMBER			
STATE OF FLORIDA #0063636			
DWN. BY: DRP	CHK. BY:	APPV'D. BY:	APPV'D. BY:
DATE: 8–20–12	DATE:	DATE:	DATE:

MATL:12 GA GALV.

10/5/20.2

DANIEL J. RAU
LICENSE
NO. 63636
STATE OF
FLORIDA
PROFESSIONAL ENGINEER

FOR OFFICE USE ONLY

Approved as complying with the
Florida Building Code
Date 2/14/2013
NOA# 12-1115.05
Miami Dade Product Control
By

SHEET 21 OF 38

CHANGE LETTER	REVISION DESCRIPTION	DWN. BY:	CHK'D. BY:	APPV'D. BY:	APPV'D. BY:	DATE

Johnson Controls

PLOT SCALE	ECN 4494
NONE	DATE: 8–20–12

TITLE
LINKAGE TIEBAR

DWG. NO.
60-022272-00B

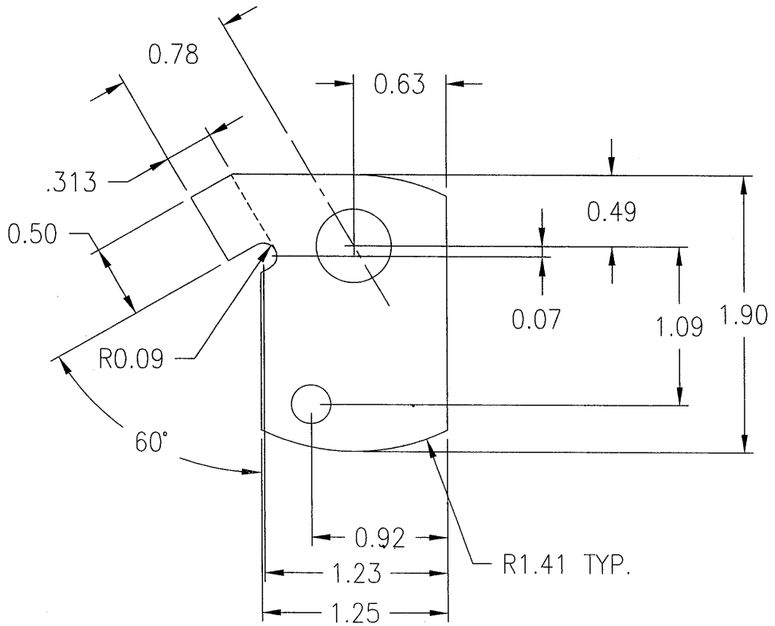

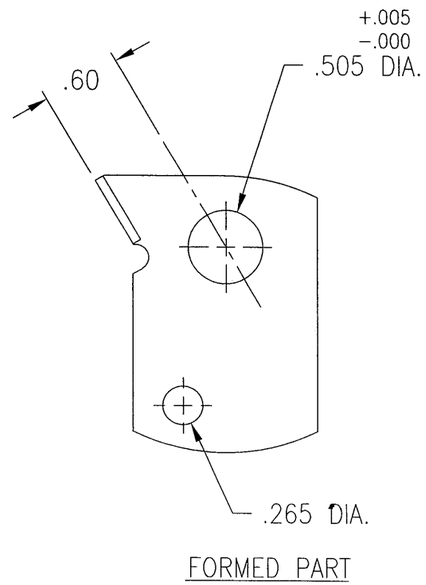

FORMED PART

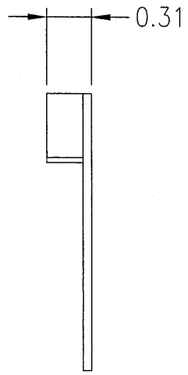

FOR OFFICE USE ONLY

Approved as complying with the Florida Building Code
Date 2/14/2013
NOA# 12-1115.05
Miami Dade Product Control
By

10/5/2012

DANIEL J. RAU
LICENSE
NO. 63636
STATE OF FLORIDA
PROFESSIONAL ENGINEER

SHEET 22 OF 38

ENGINEER OF RECORD	DANIEL J. RAU
ENGINEERING DISCIPLINE	CIVIL ENGINEER
REGISTRATION NUMBER	STATE OF FLORIDA #0063636

DWN. BY:	CHK. BY:	APPV'D. BY:	APPV'D. BY:
DRP			
DATE: 8-20-12	DATE:	DATE:	DATE:

MAT'L. 16 GA. GALV.

TOLERANCES:
UNLESS OTHERWISE SPECIFIED DIMENSIONS:
WITH 2 DECIMAL PLACES. ±.020
WITH 3 DECIMAL PLACES, ±.010
FRACTION DIMENSIONS AS MARKED.

CHANGE LETTER	REVISION DESCRIPTION	DWN. BY:	CHK'D. BY:	APPV'D. BY:	APPV'D. BY:	DATE

Johnson Controls

PLOT SCALE	ECN
NONE	DATE: 8-20-12

TITLE
CONCEALED LINKAGE
OVER-TRAVEL STOP

DWG. NO.
60-022272-00B

ECN 4494

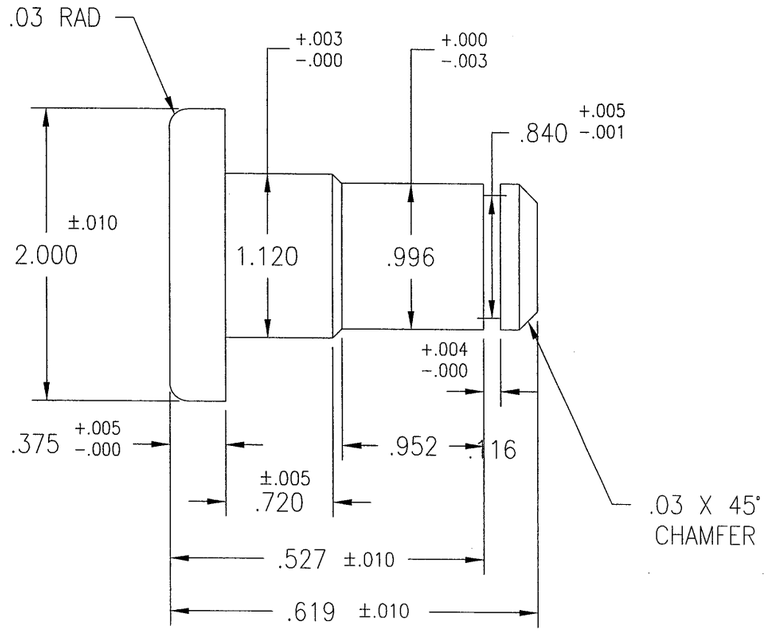

PIN FOR 10 GA. THK
LINKAGE ARM

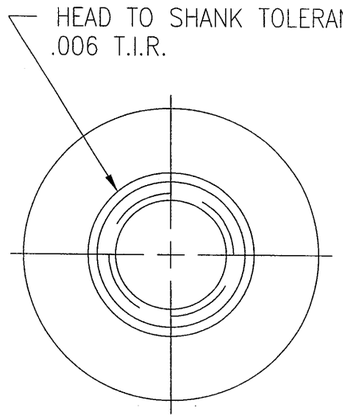

TYPICAL
END VIEW

TOLERANCES:
UNLESS OTHERWISE SPECIFIED
DIMENSIONS:
WITH 2 DECIMAL PLACES. ±.020
WITH 3 DECIMAL PLACES, ±.010
FRACTION DIMENSIONS AS MARKED.

ENGINEER OF RECORD			
DANIEL J. RAU			
ENGINEERING DISCIPLINE			
CIVIL ENGINEER			
REGISTRATION NUMBER			
STATE OF FLORIDA #0063636			
DWN. BY: DRP	CHK. BY:	APPV'D. BY:	APPV'D. BY:
DATE: 8-20-12	DATE:	DATE:	DATE:
MATERIAL: 305 SS			

10/5/2012

DANIEL J. RAU
LICENSE
NO. 63636
STATE OF
FLORIDA
PROFESSIONAL ENGINEER

FOR OFFICE USE ONLY

Approved as complying with the
Florida Building Code
Date 2/14/2013
NOA# 12-1115.05
Miami Dade Product Control
By

SHEET 23 OF 38

CHANGE LETTER	REVISION DESCRIPTION	DWN. BY:	CHK'D. BY:	APPV'D. BY:	APPV'D. BY:	DATE

Johnson Controls	PLOT SCALE NONE	ECN 4494 DATE: 8-20-12
TITLE CRANK PIN		DWG. NO. 60-022272-00B

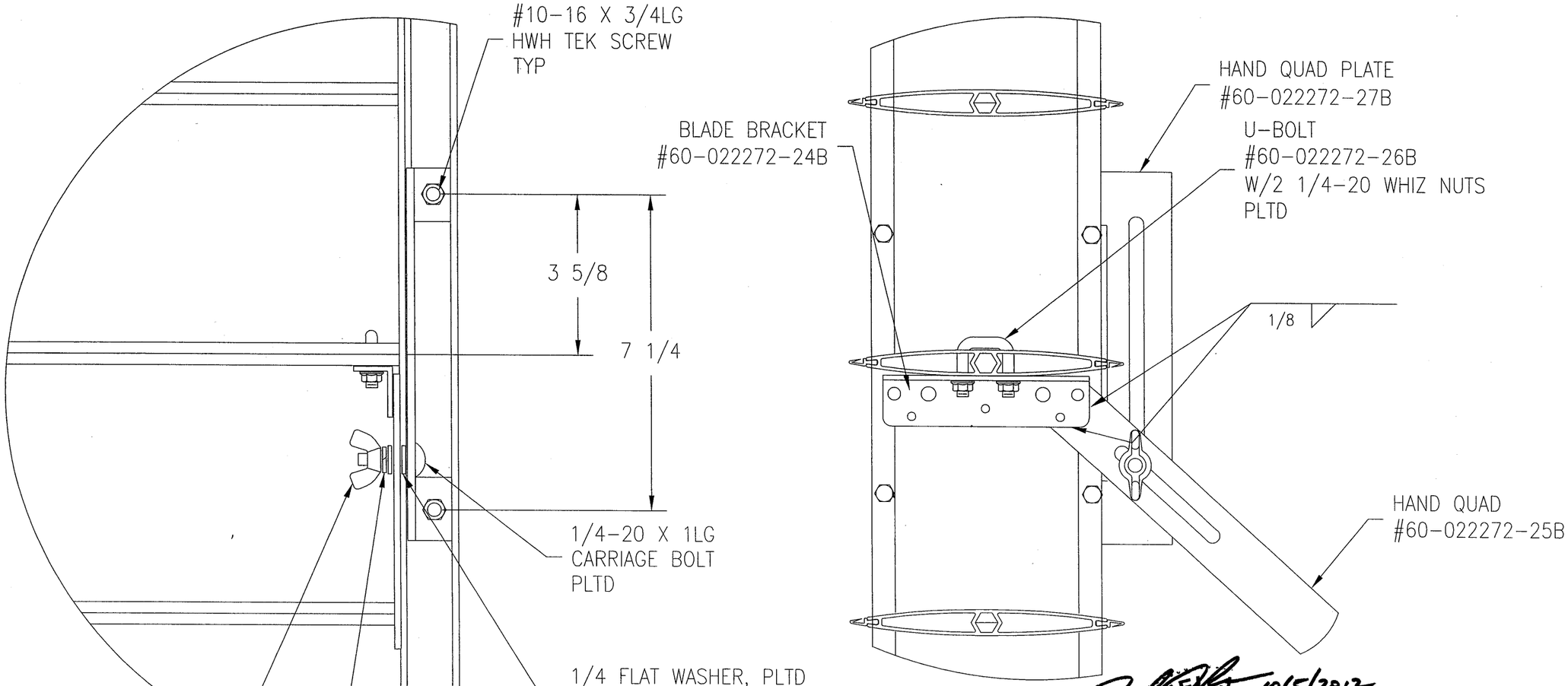

10/15/2012

DANIEL J. RAU
LICENSE
NO. 63636
STATE OF
FLORIDA
PROFESSIONAL ENGINEER

SHEET 24 OF 38

FOR OFFICE USE ONLY

Approved as complying with the
Florida Building Code
Date 2/14/2013
NOA# 12-1115.05
Miami Dade Product Control
By

ENGINEER OF RECORD: DANIEL J. RAU			
ENGINEERING DISCIPLINE: CIVIL ENGINEER			
REGISTRATION NUMBER: STATE OF FLORIDA #0063636			
DWN. BY: DRP	CHK. BY:	APPV'D. BY:	APPV'D. BY:
DATE: 8-20-12	DATE:	DATE:	DATE:

CHANGE LETTER	REVISION DESCRIPTION	DWN. BY:	CHK'D. BY:	APPV'D. BY:	APPV'D. BY:	DATE

Johnson Controls

PLOT SCALE: NONE

ECN 4494
DATE: 8-20-12

TITLE: HAND QUAD
VD-1250 DAMPER

DWG. NO.: 60-022272-00B

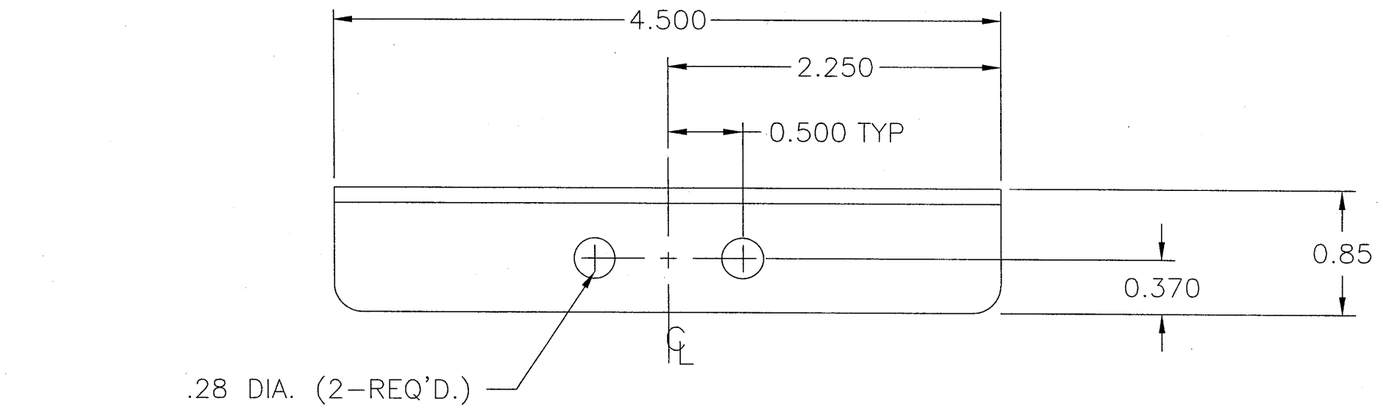

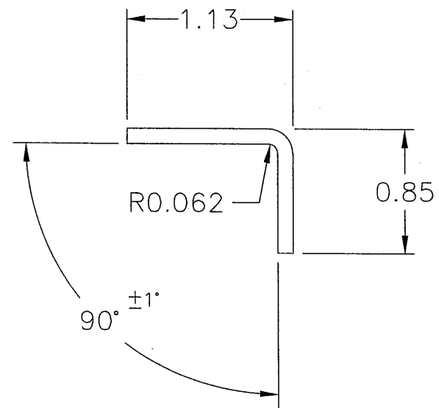

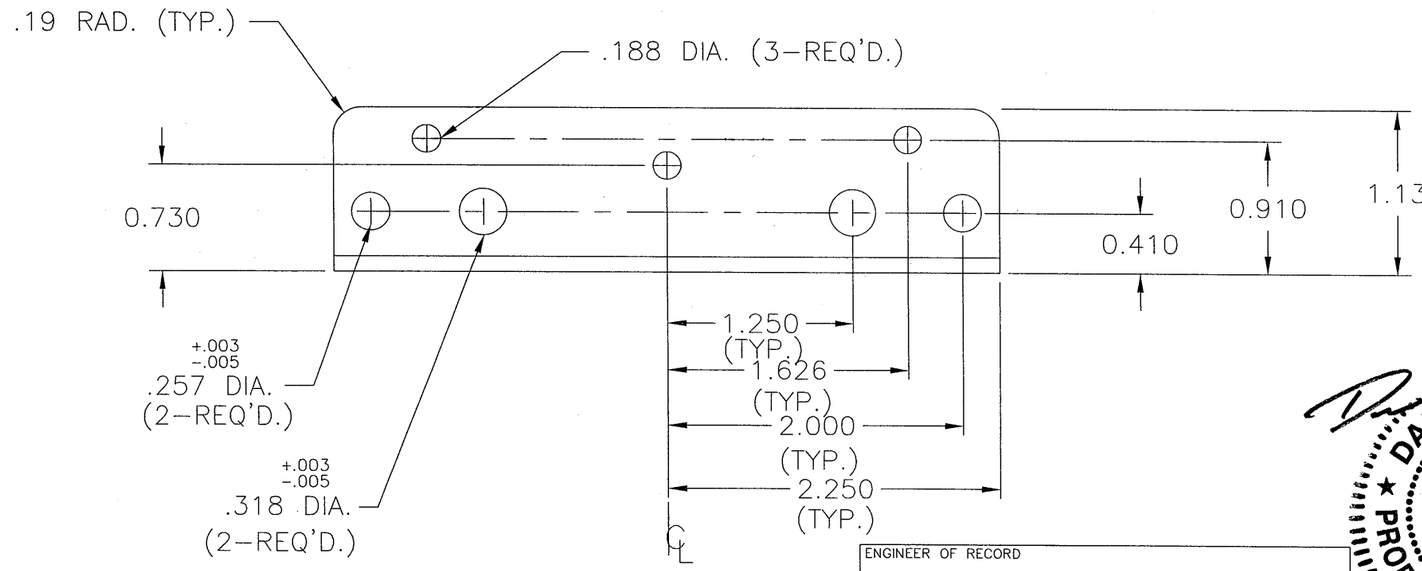

TOLERANCES:
UNLESS OTHERWISE SPECIFIED DIMENSIONS:
WITH 2 DECIMAL PLACES. ±.020
WITH 3 DECIMAL PLACES, ±.010
FRACTION DIMENSIONS AS MARKED.

FOR OFFICE USE ONLY

Approved as complying with the Florida Building Code
Date 2/14/2013
NOA# 12-1115.05
Miami Dade Product Control
By

10/5/2012

DANIEL J. RAU
LICENSE NO. 63636
STATE OF FLORIDA
PROFESSIONAL ENGINEER

SHEET 25 OF 38

ENGINEER OF RECORD	DANIEL J. RAU
ENGINEERING DISCIPLINE	CIVIL ENGINEER
REGISTRATION NUMBER	STATE OF FLORIDA #0063636

DWN. BY:	CHK. BY:	APPV'D. BY:	APPV'D. BY:
DRP			
DATE: 8-20-12	DATE:	DATE:	DATE:

MATL: 12 GA. GALV.

CHANGE LETTER	REVISION DESCRIPTION	DWN. BY:	CHK'D. BY:	APPV'D. BY:	APPV'D. BY:	DATE

Johnson Controls

PLOT SCALE	ECN
NONE	4494
	DATE: 8-20-12

TITLE: AIRFOIL BLADE BRKT

DWG. NO.: 60-022272-00B

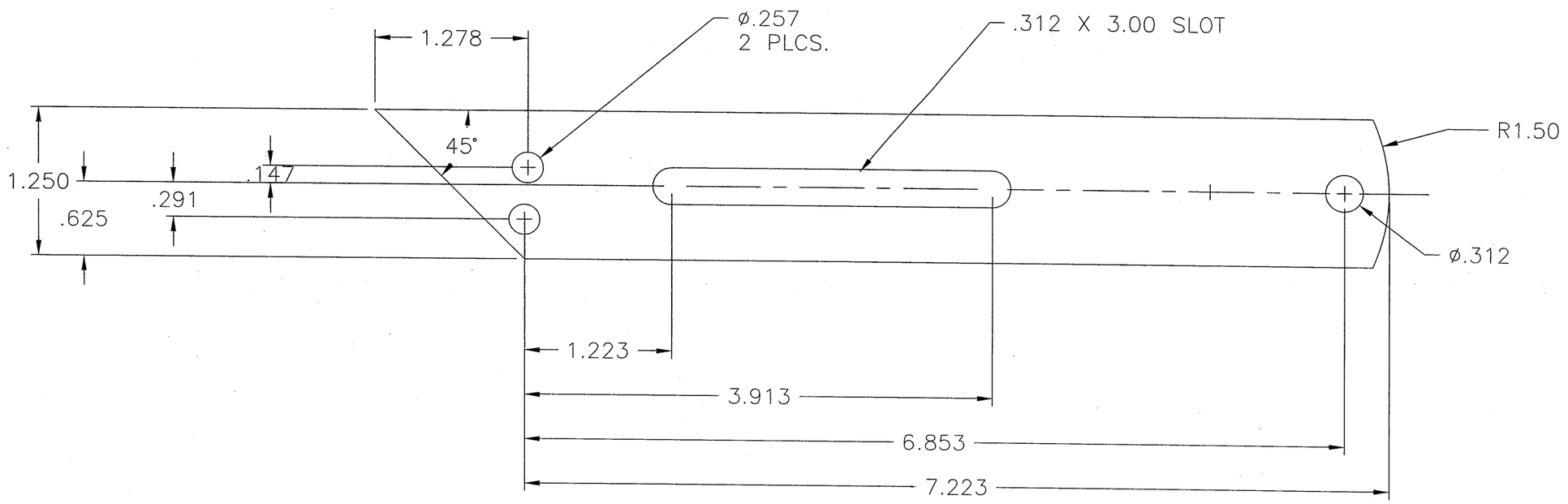

FOR OFFICE USE ONLY

Approved as complying with the Florida Building Code
Date 2/14/2013
NOA# 12-1115.05
Miami Dade Product Control
By

ENGINEER OF RECORD
DANIEL J. RAU

ENGINEERING DISCIPLINE
CIVIL ENGINEER

REGISTRATION NUMBER
STATE OF FLORIDA #0063636

DWN. BY:	CHK. BY:	APPV'D. BY:	APPV'D. BY:
DRP			
DATE: 8-20-12	DATE:	DATE:	DATE:

10 GA GALV STL

DANIEL J. RAU
LICENSE
NO. 63636
STATE OF FLORIDA
PROFESSIONAL ENGINEER
10/5/2012

SHEET 26 OF 38

CHANGE LETTER	REVISION DESCRIPTION	DWN. BY:	CHK'D. BY:	APPV'D. BY:	APPV'D. BY:	DATE

Johnson Controls

PLOT SCALE
NONE

ECN 4494
DATE: 8-20-12

TITLE
HAND QUAD ARM

DWG. NO.
60-022272-00B

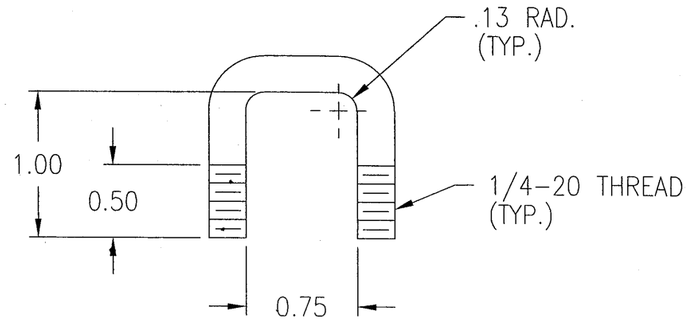

FOR OFFICE USE ONLY

Approved as complying with the Florida Building Code
Date 2/14/2013
NOA# 12-1115.05
Miami Dade Product Control
By

DANIEL J. RAU
LICENSE
NO. 63636
STATE OF FLORIDA
PROFESSIONAL ENGINEER
10/5/2012

SHEET 27 OF 38

ENGINEER OF RECORD			
DANIEL J. RAU			
ENGINEERING DISCIPLINE			
CIVIL ENGINEER			
REGISTRATION NUMBER			
STATE OF FLORIDA #0063636			
DWN. BY: DRP	CHK. BY:	APPV'D. BY:	APPV'D. BY:
DATE: 8-20-12	DATE:	DATE:	DATE:
1/4" DIA. PLTD. STL.			

TOLERANCES:
UNLESS OTHERWISE SPECIFIED
DIMENSIONS:
WITH 2 DECIMAL PLACES, ±.020
WITH 3 DECIMAL PLACES, ±.010
FRACTION DIMENSIONS AS MARKED.

CHANGE LETTER	REVISION DESCRIPTION	DWN. BY:	CHK'D. BY:	APPV'D. BY:	APPV'D. BY:	DATE

Johnson Controls

PLOT SCALE	ECN 4494
NONE	DATE: 8-20-12

TITLE
U-BOLT

DWG. NO.
60-022272-00B

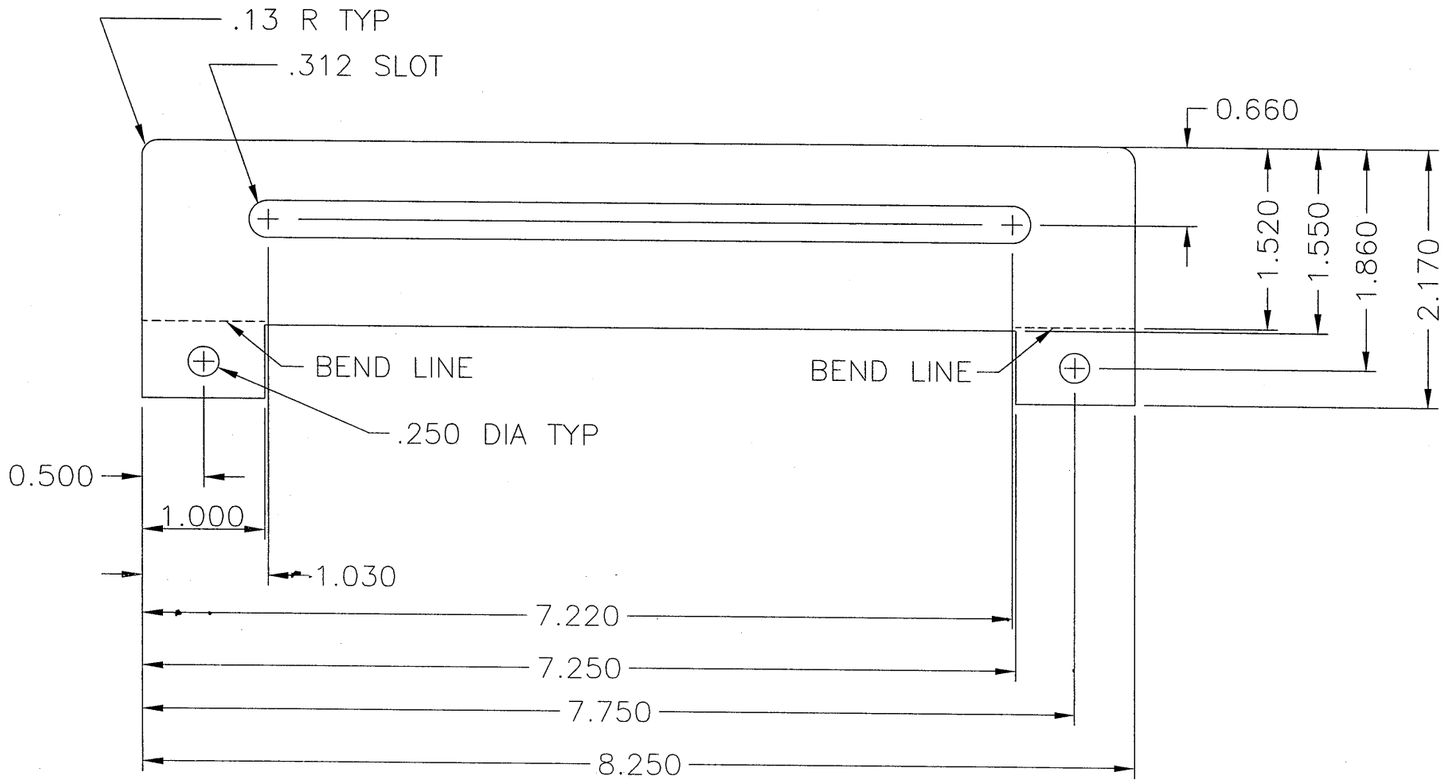

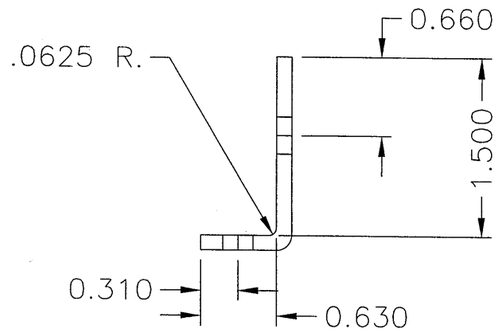

FORMED PART

TOLERANCES:
UNLESS OTHERWISE SPECIFIED
DIMENSIONS:
WITH 2 DECIMAL PLACES. ±.020
WITH 3 DECIMAL PLACES, ±.010
FRACTION DIMENSIONS AS MARKED.

ENGINEER OF RECORD
DANIEL J. RAU

ENGINEERING DISCIPLINE
CIVIL ENGINEER

REGISTRATION NUMBER
STATE OF FLORIDA #0063636

DWN. BY: DRP	CHK. BY:	APPV'D. BY:	APPV'D. BY:
DATE: 8-20-12	DATE:	DATE:	DATE:

MAT'L 12 GA GALV. STEEL

DANIEL J. RAU 10/5/2012
LICENSE NO. 63636
STATE OF FLORIDA
PROFESSIONAL ENGINEER

FOR OFFICE USE ONLY

Approved as complying with the Florida Building Code
Date 2/14/2013
NOA# 12-1115.05
Miami Dade Product Control
By

SHEET 28 OF 38

CHANGE LETTER	REVISION DESCRIPTION	DWN. BY:	CHK'D. BY:	APPV'D. BY:	APPV'D. BY:	DATE

Johnson Controls

PLOT SCALE 3/4=1

ECN 4494
DATE: 8-20-12

TITLE
HAND QUADRANT PLATE

DWG. NO.
60-022272-00B

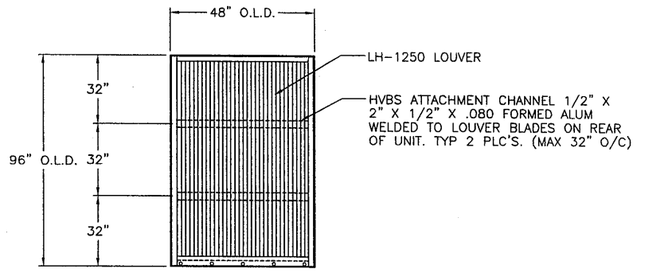

LH-1250 LOUVER ASSEMBLY "C"

NTS DESIGN PRESSURE RATING +160/ -140 PSF FRONT VIEW

SEE SECTION DETAILS -06D FOR APPLICABILITY

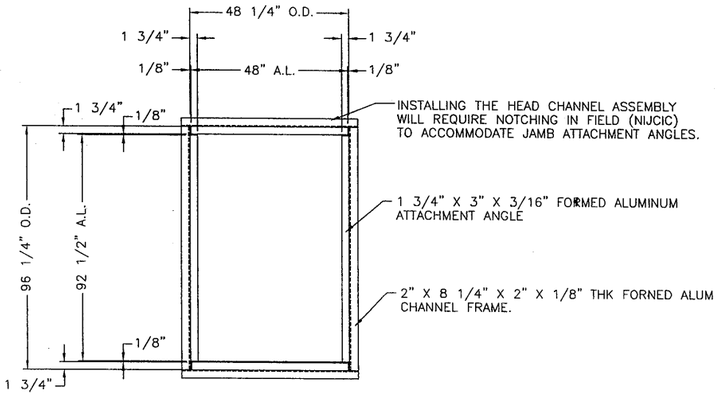

CHANNEL FRAME & ATT ANGLE ELEVATION

REAR VIEW

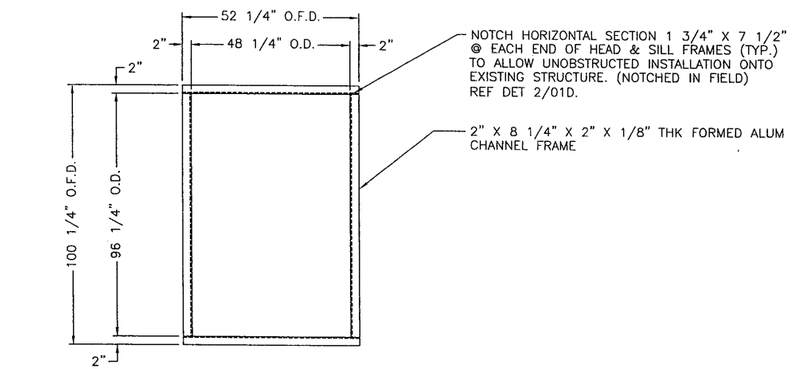

CHANNEL FRAME ELEVATION

FRONT VIEW

1 REAR & FRONT ELEVATION VIEW OF CHANNEL FRAME & ATT. ANGLE

N.T.S.

LEGEND:

O.F.D. = OUTSIDE FRAME DIM.	HVBS = HIDDEN VERTICAL BLADE SUPPORT.
R.O. = ROUGH OPENING	SSD = SHIP SECTION DIM.
A.L. = ANGLE LENGTH	L.D. = LOUVER DIM.
O.D. = OPENING DIM.	DIM. = DIMENSION
N.T.S. = NOT TO SCALE	SIM = SIMILAR
NIJCIC = NOT IN JOHNSON CONTROLS INC CONTRACT	

NOTES:

- THE STRUCTURAL SUBSTRATE THAT HOLDS THE LOUVER IN PLACE, IS ASSUMED TO BE STRUCTURALLY SOUND AND STABLE TO TAKE THE LOADS DISPERSED BY THE LOUVER.
- LOUVER IS NONBEARING AND IS NOT DESIGNED TO WITHSTAND BUILDING DEADLOADS.

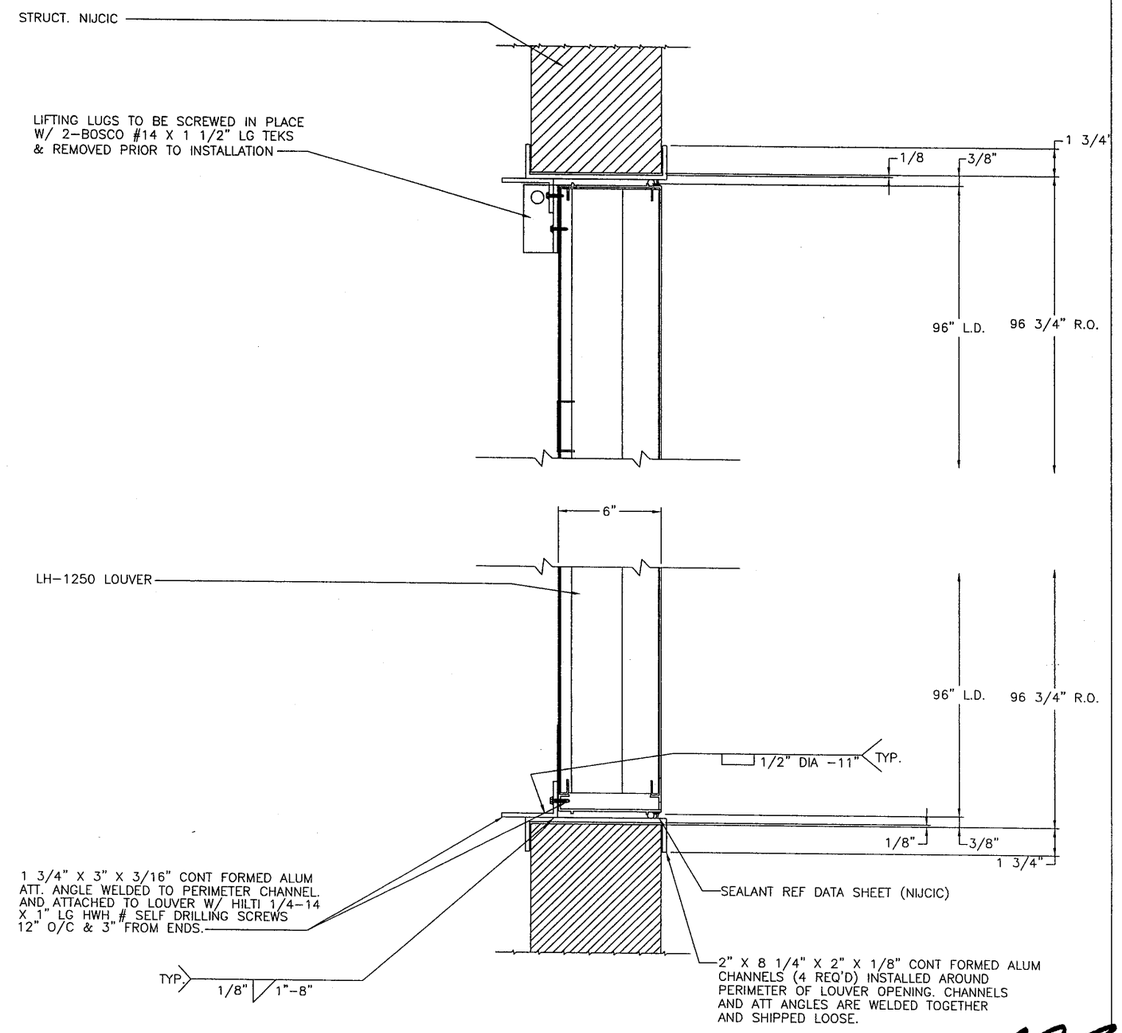

LH-1250 SECTION (JAMB SIM TO HEAD)

3"=1'-0"

FOR FASTENER LOADS REF DWG. 60-021617-06D.

FOR OFFICE USE ONLY

Approved as complying with the Florida Building Code
Date 2/14/2013
NOA# 12-1115.05
Miami Dade Product Control
By

DANIEL J. RAU 10/15/2012
LICENSE NO. 63636
STATE OF FLORIDA
PROFESSIONAL ENGINEER

ENGINEER OF RECORD	DANIEL J. RAU
ENGINEERING DISCIPLINE	CIVIL ENGINEER
REGISTRATION NUMBER	STATE OF FLORIDA #0063636
DWN. BY: DRP	CHK. BY:
DATE: 8-20-12	APPV'D. BY: DATE:
	APPV'D. BY: DATE:

CHANGE LETTER	REVISION DESCRIPTION	DWN. BY:	CHK'D. BY:	APPV'D. BY:	APPV'D. BY:	DATE

Johnson Controls

PLOT SCALE: NONE

ECN 4494 DATE: 8-20-12

TITLE: LOUVER DAMPER ASSY DADE CTY. FLORIDA

LH-1250 LOUVER ASSEMBLIES & SECTIONS

DWG. NO. 60-022272-00D

FRAME	
6063-T5 extruded aluminum with .125 nominal wall thickness.	X
Flange frame is same material and thickness as above.	
BLADES	
6063-T5 extruded aluminum with .091 nominal wall thickness. (Blades are mounted vertically)	X
SCREEN	
5/8" x .040" expanded flattened aluminum bird screen.	
1/2" mesh x .063" aluminum bird screen.	X
18-16 mesh al. insect screen.	
No Screen	

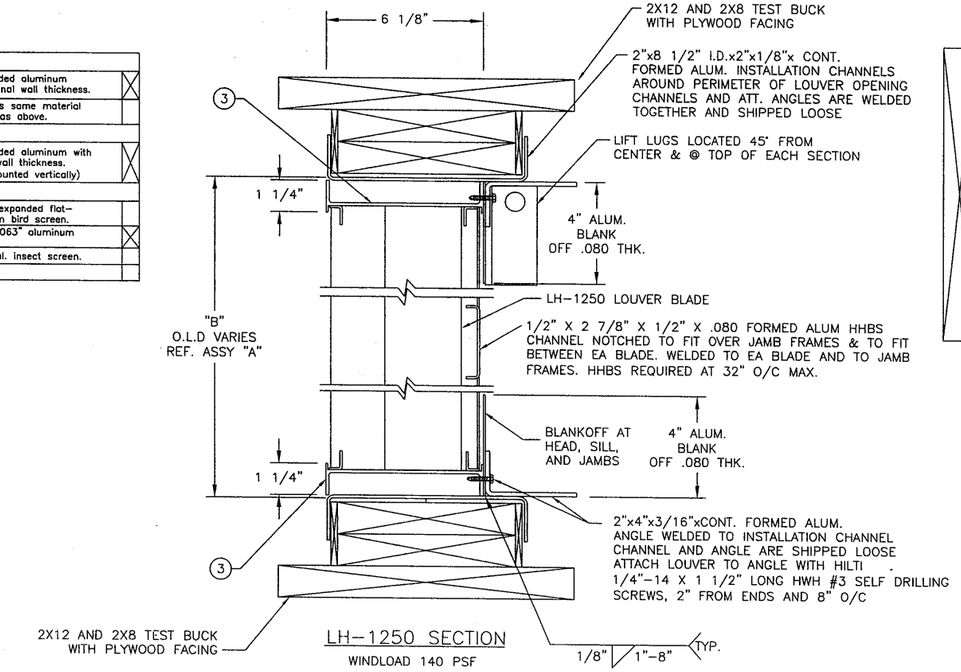

LH-1250 SECTION

WINDLOAD 140 PSF

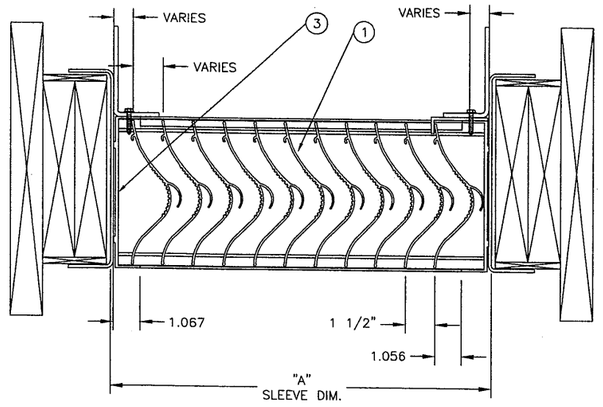

LH-1250 PLANVIEW

ITEM	DESCRIPTION	MATERIAL
1	BLADE	6063-T5
2	JAMB FRAME	6063-T5
3	HEAD FRAME	6063-T5
4	SILL FRAME	6063-T5

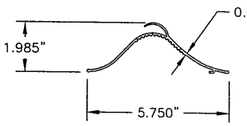

1 — BLADE DETAIL
N.T.S.
REF: 70-020748-00B

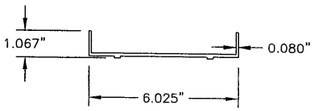

2 — JAMB FRAME DETAIL
N.T.S.
REF: 70-020750-00B

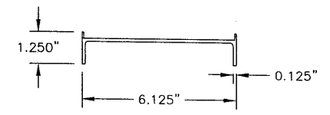

3 — HEAD FRAME DETAIL
N.T.S.
REF: 70-020750-00B

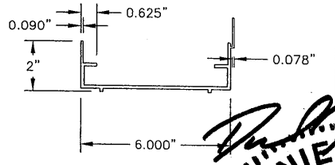

4 — SILL FRAME DETAIL
N.T.S.
REF: 70-020749-00B

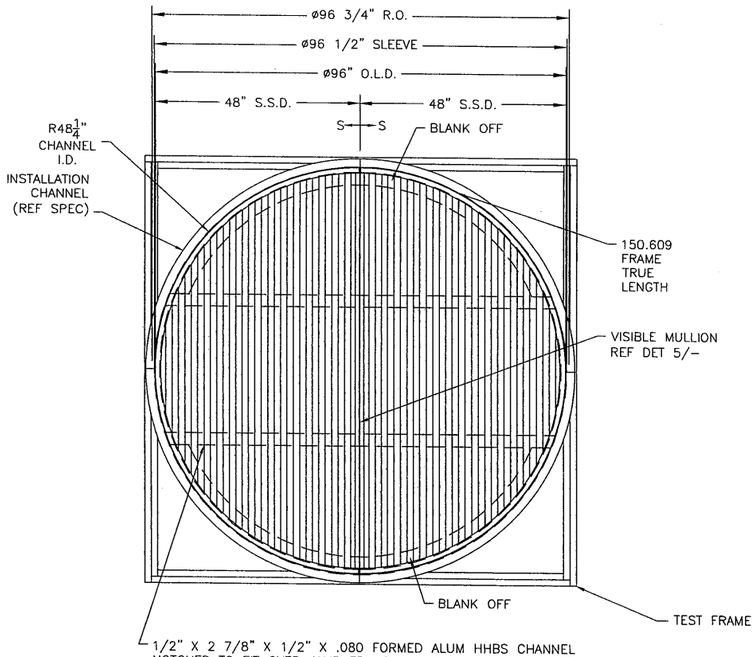

ASSEMBLY "D" FRONT VIEW
N.T.S.
QTY: 3 REQUIRED W/ 2 SHIP SECTIONS EACH
INSTALLATION CHANNEL SHIPPED LOOSE IN 4 PIECES

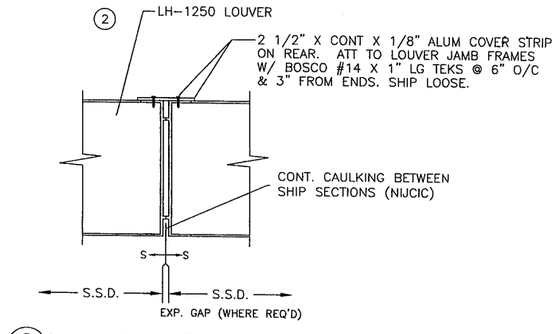

5 — MULLION SPLICE DETAIL
N.T.S.
DESIGN PRESSURE RATING: +160/ -140 PSF.

NOTES:
NIJCIC = NOT IN JOHNSON CONTROLS INC CONTRACT

TESTS PERFORMED
TAS-201 LARGE MISSLE IMPACT
TAS-202 UNFORM STATIC AIR PRESSURE TEST
TAS-203 CYCLIC WIND PRESSURE TEST
DESIGN PRESSURE RATING +160 PSF POS., -140 PSF NEG.

FOR OFFICE USE ONLY

Approved as complying with the Florida Building Code
Date 2/14/2013
NOA# 12-1115.05
Miami Dade Product Control
By

DANIEL J. RAU 2/14/2013
LICENSE NO. 63636
STATE OF FLORIDA
PROFESSIONAL ENGINEER

ENGINEER OF RECORD: DANIEL J. RAU
ENGINEERING DISCIPLINE: CIVIL ENGINEER
REGISTRATION NUMBER: STATE OF FLORIDA #0063636

DWN. BY:	CHK'D. BY:	APPV'D. BY:	APPV'D. BY:
DRP			
DATE: 8/20/12	DATE:	DATE:	DATE:

CHANGE LETTER	REVISION DESCRIPTION	DWN. BY:	CHK'D. BY:	APPV'D. BY:	APPV'D. BY:	DATE

Johnson Controls

PLOT SCALE: NONE
ECN 4494 DATE: 8-20-12

TITLE: LH-1250 TEST LOUVERS ROUND SHAPES

DWG. NO.: 60-022272-00D

FRAME	
6063–T5 extruded aluminum with .125 nominal wall thickness.	X
Flange frame is same material and thickness as above.	
BLADES	
6063–T5 extruded aluminum with .091 nominal wall thickness. (Blades are mounted vertically)	X
SCREEN	
5/8" x .040" expanded flat–tened aluminum bird screen.	
1/2" mesh x .063" aluminum bird screen.	X
18–16 mesh al. insect screen.	
No Screen	

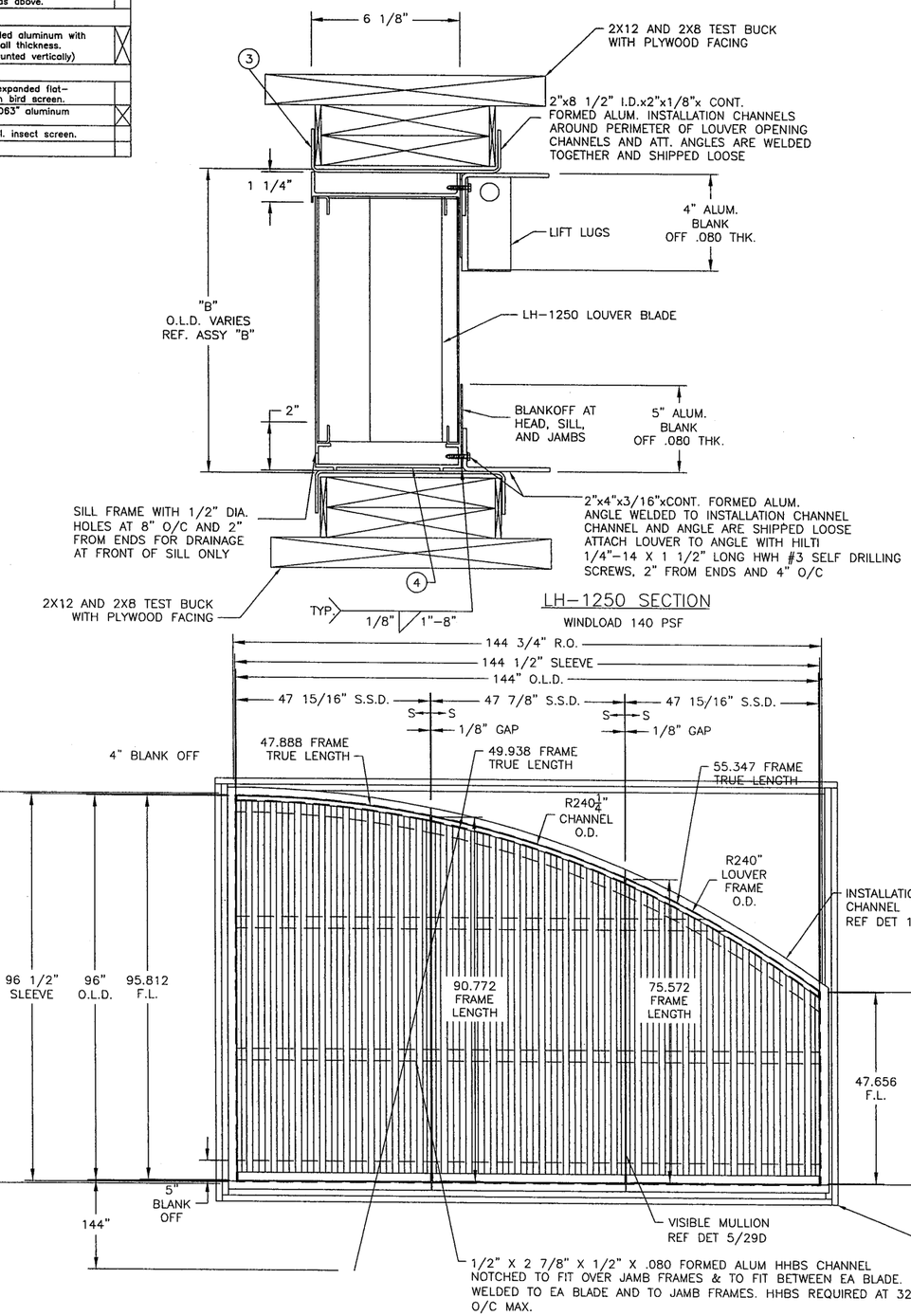

LH–1250 SECTION
WINDLOAD 140 PSF

ASSEMBLY "E"
N.T.S.
QTY: 3 REQUIRED W/ 3 SHIP SECTIONS EACH

FRONT VIEW

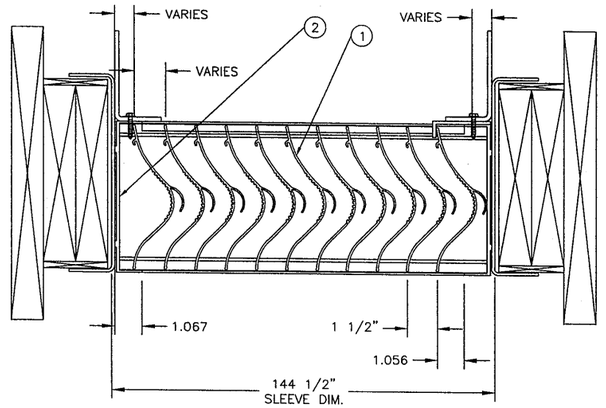

LH–1250 PLANVIEW

PART LIST (REF DWG 29D)		
ITEM	DESCRIPTION	MATERIAL
1	BLADE	6063–T5
2	JAMB FRAME	6063–T5
3	HEAD FRAME	6063–T5
4	SILL FRAME	6063–T5

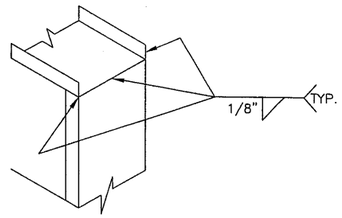

HEAD/SILL JAMB WELD DETAIL

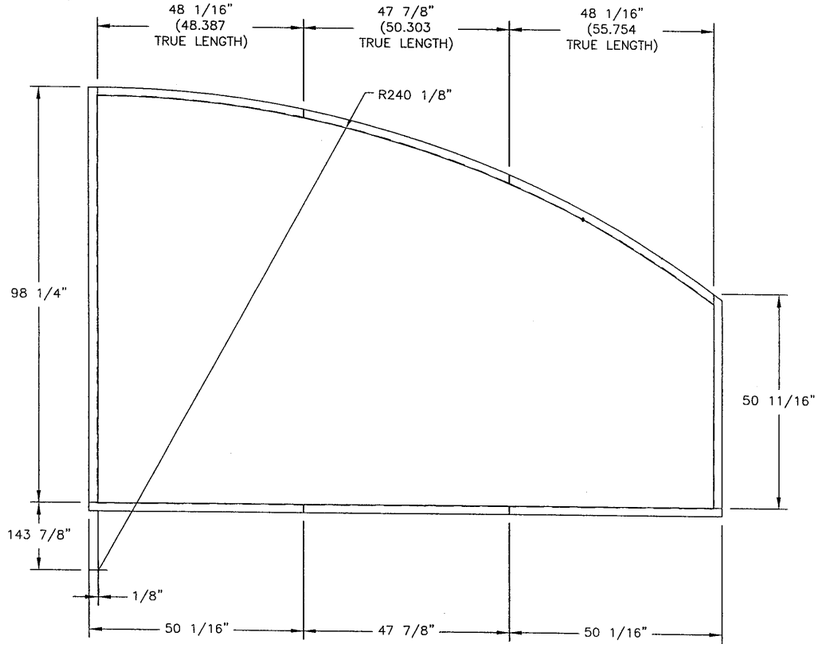

1 / – INSTALLATION CHANNEL DETAIL
N.T.S.

TESTS PERFORMED
TAS–201 LARGE MISSLE IMPACT
TAS–202 UNFORM STATIC AIR PRESSURE TEST
TAS–203 CYCLIC WIND PRESSURE TEST
DESIGN PRESSURE RATING +160 PSF POS., –140 PSF NEG.

Approved as complying with the Florida Building Code
Date 2/14/2013
NOA# 12-1115.05
Miami Dade Product Control
By

FOR OFFICE USE ONLY

DANIEL J. RAU
LICENSE NO. 63636
STATE OF FLORIDA
PROFESSIONAL ENGINEER

ENGINEER OF RECORD	DANIEL J. RAU
ENGINEERING DISCIPLINE	CIVIL ENGINEER
REGISTRATION NUMBER	STATE OF FLORIDA #0063636
DWN. BY: DRP	CHK. BY:
DATE: 8/20/12	APP'D. BY: / DATE:

CHANGE LETTER	REVISION DESCRIPTION	DWN. BY:	CHK'D. BY:	APP'D. BY:	APP'D. BY:	DATE

Johnson Controls

PLOT SCALE: NONE
ECN 4494 DATE: 8–20–12

TITLE: LH–1250 TEST LOUVERS ROUND SHAPES

DWG. NO.: 60–022272–00D

FRAME	
6063–T6 extruded aluminum with .095" nominal wall thickness.	X
Flange frame is same material and thickness as above.	
BLADES	
6063–T6 extruded aluminum with .080" nominal wall thickness.	X
SCREEN	
5/8" x .040" expanded flattened aluminum bird screen.	
1/2" mesh x .063" aluminum bird screen.	X
18–16 mesh alum insect screen	
No screen.	
FINISH	
Mill.	X
Kynar (opt).	
Baked enamel (modified fluoropolymer, 50% Kynar, opt).	
Color Anodize (opt).	
Clear Anodize (opt).	
Color:	

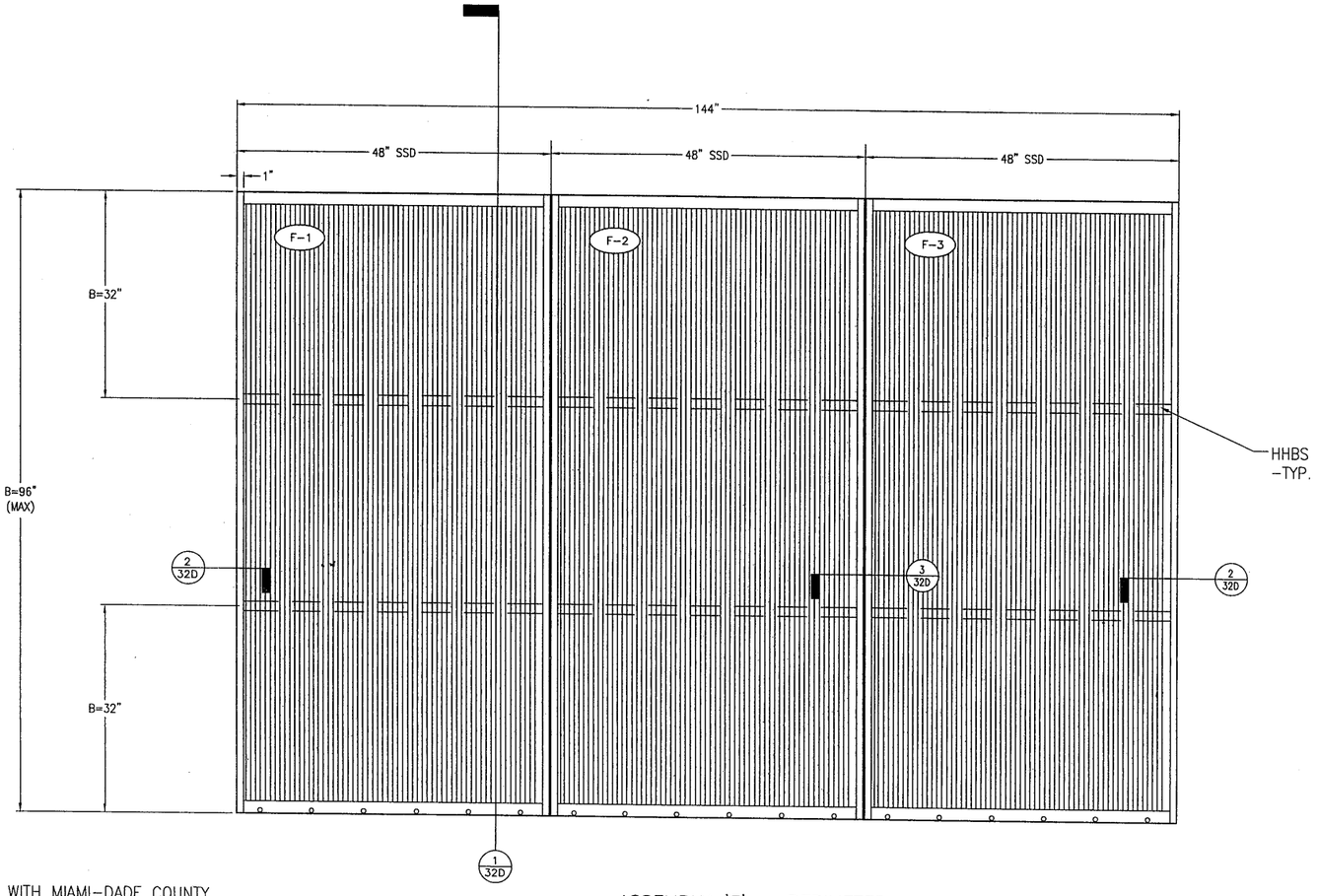

ASSEMBLY 'F' – PERIMETER ANGLE INSTALLATION METHOD

N.T.S. FRONT VIEW

3–ASSEMBLIES REQ'D W/ 3–SHIP SECTIONS EACH.

NOTES:

1) THE LH–1250 HAS BEEN TESTED IN ACCORDANCE WITH MIAMI–DADE COUNTY PROTOCOLS TAS100(A), TAS–201, 202 & 203 FOR LARGE MISSILE IMPACT, UNIFORM PRESSURE AND CYCLIC WIND PRESSURE.

2) THIS LOUVER SYSTEM IS APPROVED FOR APPLICATIONS WITH DESIGN PRESSURES OF +160/–140 PSF OR LESS.

3) THIS LOUVER SYSTEM IS NON–BEARING AND IS NOT DESIGNED TO WITHSTAND BUILDING DEAD OR LIVE LOADS.

4) LOUVER ANCHORS ARE REVIEWED FOR ATTACHMENT INTO STEEL, CONCRETE, MASONRY OR TIMBER SUBSTRUCTURE. MINIMUM EDGE DISTANCE AND EMBEDMENT REQUIREMENTS ARE SHOWN. JOHNSON CONTROLS DOES NOT DETERMINE THE STRUCTURAL INTEGRITY OF THE SUB–STRUCTURE.

5) MAXIMUM SINGLE SECTION SIZE: 48" WIDE X 96" HIGH.

7) MAXIMUM ASSEMBLED LOUVER SIZE: UNLIMITED WIDE X 96" HIGH. MAX. MULLION SPACING IS 48".

8) SECTIONS OR ASSEMBLIES MAY BE STACKED VERTICALLY PROVIDING A SUITABLE STRUCTURAL SUPPORT IS DESIGNED AND INSTALLED BY OTHERS TO SUPPORT ALL LOADS TRANSFERRED FROM THE LOUVER.

TESTS PERFORMED:
TAS–100a WATER PERFORMANCE TEST
TAS–201 LARGE MISSLE IMPACT
TAS–202 UNIFORM STATIC AIR PRESSURE TEST
TAS–203 CYCLIC WIND PRESSURE TEST
DESIGN PRESSURE RATING +160/–140 PSF

Approved as complying with the Florida Building Code
Date 2/14/2013
NOA# 12-1115.05
Miami Dade Product Control
By _____

10/5/2012

DANIEL J. RAU
LICENSE
NO. 63636
STATE OF
FLORIDA
PROFESSIONAL ENGINEER

FOR OFFICE USE ONLY

ENGINEER OF RECORD	DANIEL J. RAU
ENGINEERING DISCIPLINE	CIVIL ENGINEER
REGISTRATION NUMBER	STATE OF FLORIDA #0063636

CHANGE LETTER	REVISION DESCRIPTION	DWN. BY:	CHK'D. BY:	APPV'D. BY:	APPV'D. BY:	DATE
	Johnson Controls					

DWN. BY: DRP | CHK. BY: | APPV'D. BY: | APPV'D. BY:
DATE: 8/20/12 | DATE: | DATE: | DATE:

PLOT SCALE: NONE
ECN 4494
DATE: 8-20-12

SHEET 32 OF 38

TITLE: LH–1250 LOUVER, SPEC, ASSY & NOTES CLIP ANGLE INSTALLATION

DWG. NO.: 60-022272-00D

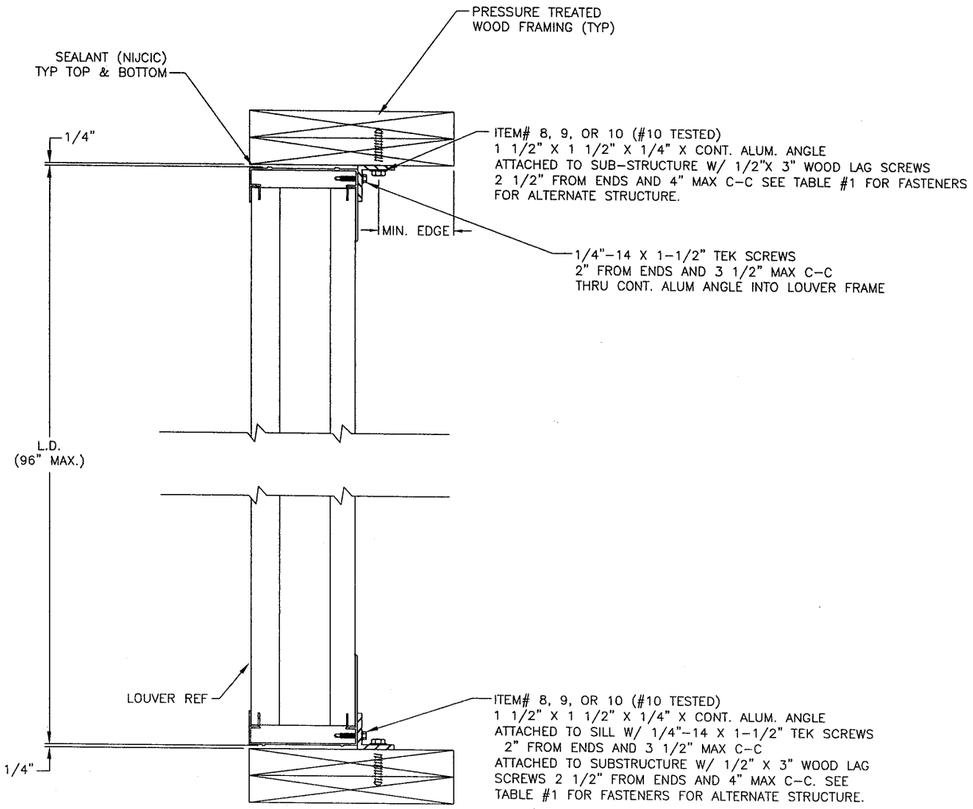

1/31D HEAD & SILL DETAIL: METHOD 1 – AS TESTED – WOOD FRAME
N.T.S.
ALTERNATE STRUCTURE – CONCRETE, STEEL FRAME

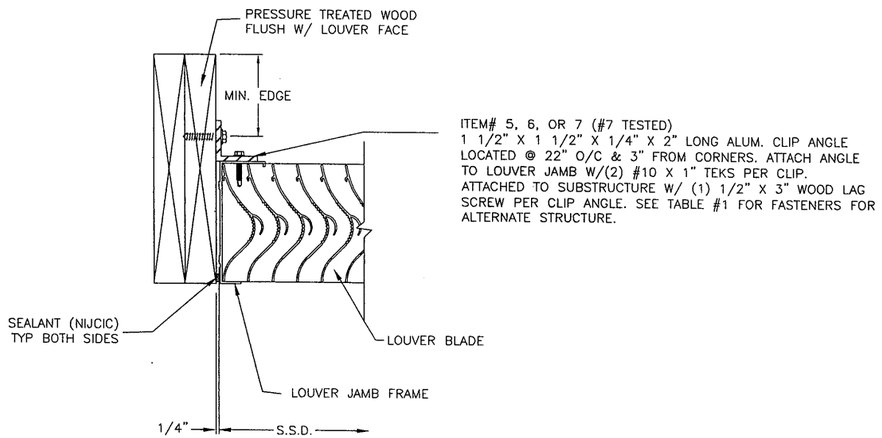

2/31D JAMB DETAIL: METHOD 1 – AS TESTED – WOOD FRAME
N.T.S.
ALTERNATE STRUCTURE – CONCRETE, STEEL FRAME

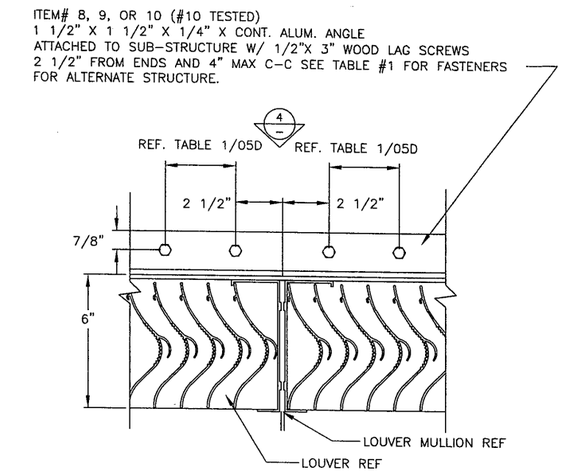

3/31D MULLION DETAIL: METHOD 1 – AS TESTED – WOOD FRAME
N.T.S.
ALTERNATE STRUCTURE – CONCRETE, STEEL FRAME

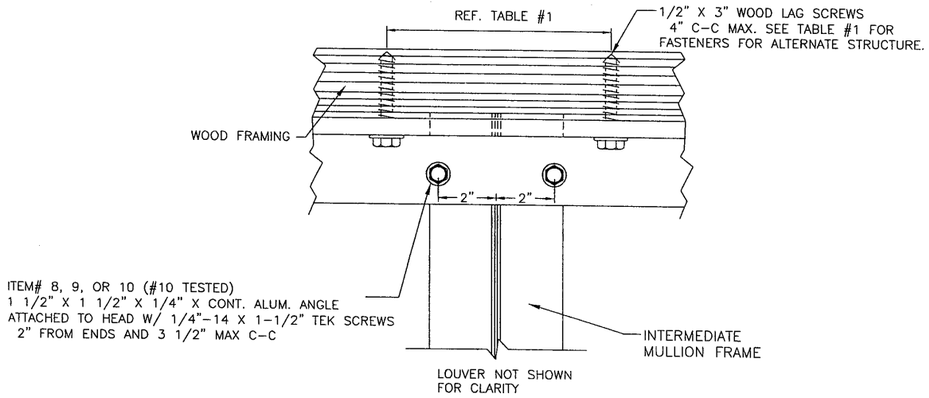

4/– MULLION HEAD DETAIL @ STRUCTURE (SILL SIM): METHOD 1 – AS TESTED – WOOD FRAME
N.T.S. REAR VIEW
ALTERNATE STRUCTURE – CONCRETE, STEEL FRAME

FOR OFFICE USE ONLY

Approved as complying with the Florida Building Code
Date 2/14/2013
NOA# 12-1115.05
Miami Dade Product Control
By

ENGINEER OF RECORD
DANIEL J. RAU
ENGINEERING DISCIPLINE
CIVIL ENGINEER
REGISTRATION NUMBER
STATE OF FLORIDA #0063636

DRAWINGS: 3 SHEET 2009/2010 FBC, 2007 FBC, 2004 FBC, 2001 FBC, 1998 FBC, 1994 SBC, 1997 UBC, 1994 UBC
DWN. BY: DRP | CHK. BY: | APP'D. BY: | APP'D. BY:
DATE: 8/20/12 | DATE: | DATE: | DATE:

CHANGE LETTER	REVISION DESCRIPTION	DWN. BY:	CHK'D. BY:	APP'D. BY:	APP'D. BY:	DATE

Johnson Controls
PLOT SCALE: NONE
ECN 4494
DATE: 8-20-12
DWG. NO. 60-022272-00D

SHEET 33 OF 38

TITLE: LH-1250 LOUVER CLIP ANGLE INSTALLATION DETAILS

DANIEL J. RAU LICENSE NO. 63636 STATE OF FLORIDA PROFESSIONAL ENGINEER

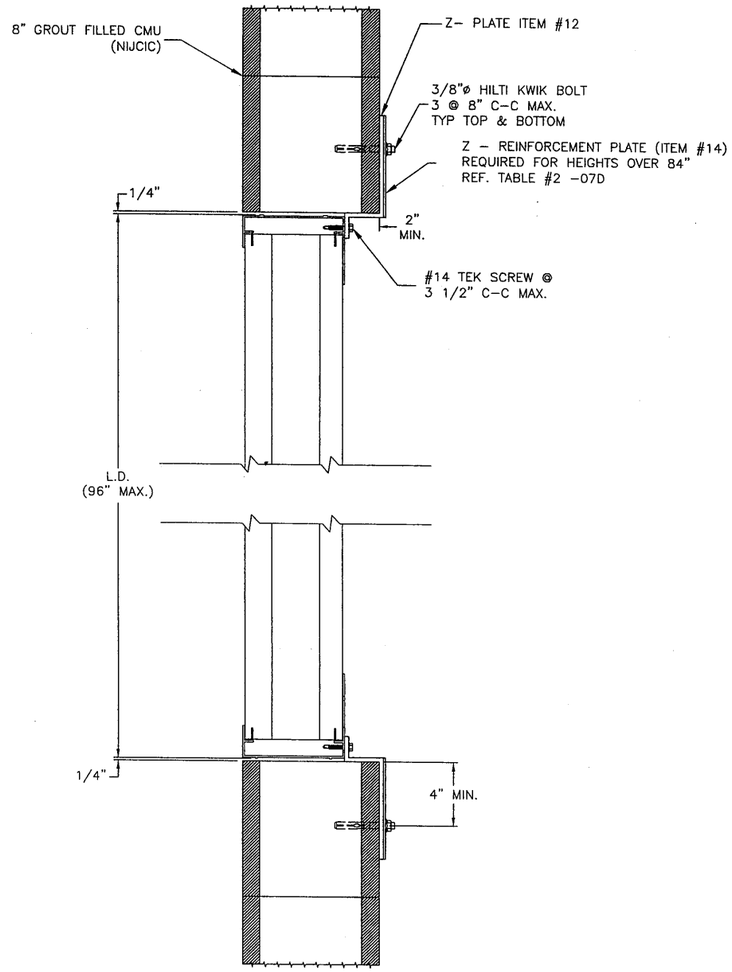

1A / 31D HEAD & SILL DETAIL METHOD 2 - GROUT FILLED CMU
N.T.S.

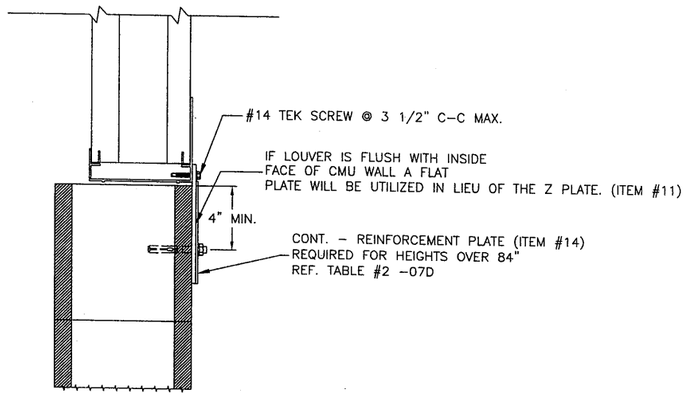

1B / 31D HEAD & SILL DETAIL: METHOD 2 - GROUT FILLED CMU
N.T.S.

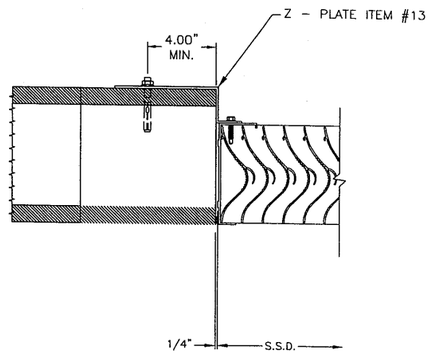

2A / 31D JAMB DETAIL METHOD 2 - GROUT FILLED CMU
N.T.S.

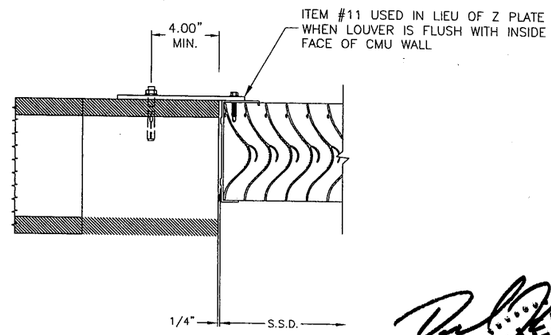

2B / 31D JAMB DETAIL METHOD 2 - GROUT FILLED CMU
N.T.S.

FOR OFFICE USE ONLY

Approved as complying with the Florida Building Code
Date 2/14/2013
NOA# 12-1115.05
Miami Dade Product Control
By

ENGINEER OF RECORD
DANIEL J. RAU
ENGINEERING DISCIPLINE
CIVIL ENGINEER
REGISTRATION NUMBER
STATE OF FLORIDA #0063636

DRWG. BY: DRP DATE: 8/20/12
CHK'G. BY: DATE:
APP'V'D. BY: DATE:
APP'V'D. BY: DATE:

SHEET 34 OF 38

CHANGE LETTER	REVISION DESCRIPTION	DWN. BY:	CHK'D. BY:	APP'V'D. BY:	APP'V'D. BY:	DATE

Johnson Controls

PLOT SCALE: NONE
ECN 4494
DATE: 8-20-12

TITLE: LH-1250 LOUVER CLIP ANGLE INSTALLATION DETAILS

DWG. NO.: 60-022272-00D

DANIEL J. RAU
LICENSE
NO. 63636
STATE OF
FLORIDA
PROFESSIONAL ENGINEER
12/5/2012

TABLE #1: APPROVED ATTACHMENTS

MIN. SUPPORT MAT'L	TYPE CONNECTION	ANGLE SLOT WIDTH	MAX SPACING	MIN EMBEDMENT	MIN EDGE
(12 GA MIN) STEEL	5/16"ø A307 OR SDS	3/8"	3 1/2" C-C MAX.	N/A	2 1/2"
(4" MIN) CONCRETE	3/8"ø KB TZ	7/16"	6" C-C MAX.	2"	3"
(8" CMU) GROUT FILLED MASONRY	3/8"ø KBIII	7/16"	8" C-C MAX.	2 1/2"	4"
(2 - 2 X 10) WOOD	1/2"ø X 3 LAG SCREW	9/16"	4" C-C MAX.	3"	2 1/2"

NOTE: ALL FASTENERS MUST BE INSTALLED PER THE MANUFACTURER'S FLORIDA/DADE COUNTY APPROVED INSTALLATION INSTRUCTIONS

TABLE #2: DRAWING CROSS REFERENCE

ITEM	DRAWING	MATERIAL	DESCRIPTION	JOHNSON CONTROLS #
1	60-022272-35D	6063-T6 AL	HEAD FRAME	70-021995-00B
2	60-022272-35D	6063-T6 AL	BLADE	70-021868-00B
3	60-022272-35D	6063-T6 AL	SILL FRAME	70-020749-00B
4	60-022272-35D	6063-T6 AL	JAMB FRAME	70-020750-00B
5	60-022272-36D	6063-T6 AL	CLIP ATTACHMENT (STEEL STRUCTURE)	
6	60-022272-36D	6063-T6 AL	CLIP ATTACHMENT (CONCRETE STRUCTURE)	
7	60-022272-36D	6063-T6 AL	CLIP ATTACHMENT (WOOD STRUCTURE)	
8	60-022272-36D	6063-T6 AL	CONT. CLIP ATTACHMENT (STEEL STRUCTURE)	
9	60-022272-36D	6063-T6 AL	CONT. CLIP ATTACHMENT (CONCRETE STRUCTURE)	
10	60-022272-36D	6063-T6 AL	CONT. CLIP ATTACHMENT (WOOD STRUCTURE)	
11	60-022272-37D	5052-H32 AL	CONT. FLAT PLATE (CMU STRUCTURE)	
12	60-022272-37D	5052-H32 AL	HEAD/SILL CONT. Z PLATE (CMU STRUCTURE)	
13	60-022272-37D	3003-H14 AL	JAMB ANGLE CONT. Z PLATE (CMU STRUCTURE)	
14	60-022272-37D	3003-H14 AL	CONT. REINFORCEMENT PLATE (CMU STRUCTURE)	

FOR OFFICE USE ONLY

Approved as complying with the Florida Building Code
Date 2/14/2013
NOA# 12111505
Miami Dade Product Control
By

DANIEL J. RAU
LICENSE NO. 63636
STATE OF FLORIDA
PROFESSIONAL ENGINEER
10/5/2012

ENGINEER OF RECORD: DANIEL J. RAU
ENGINEERING DISCIPLINE: CIVIL ENGINEER
REGISTRATION NUMBER: STATE OF FLORIDA #0063636

CHANGE LETTER	REVISION DESCRIPTION	DWN. BY:	CHK'D. BY:	APP'V'D. BY:	APP'V'D. BY:	DATE
		DRP				8/20/12

Johnson Controls

PLOT SCALE: NONE
ECN 4494 DATE: 8-20-12

SHEET 35 OF 38

TITLE: LH-1250 LOUVER ALTERNATE ATTACHMENT TABLES

DWG. NO.: 60-022272-00D

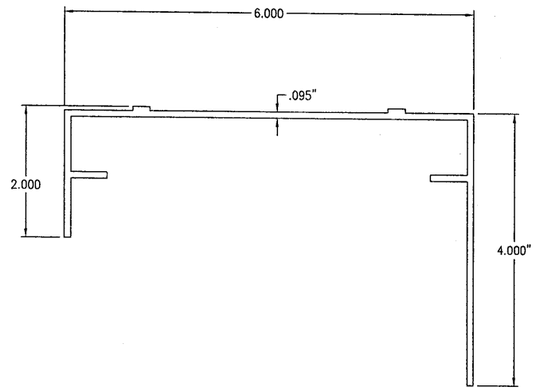

ITEM 1 – HEAD FRAME
JOHNSON CONTROLS# 70-021995-00B

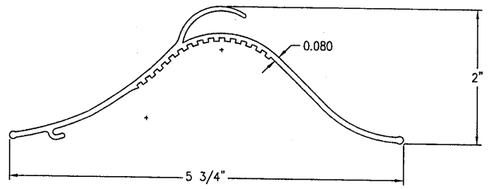

ITEM 2 – LOUVER BLADE
JOHNSON CONTROLS# 70-02074B-00B

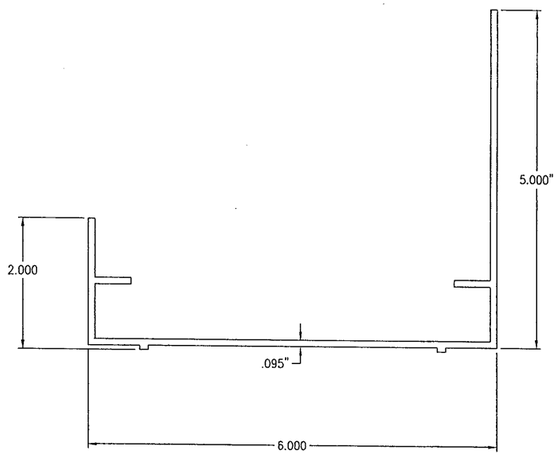

ITEM 3 – SILL FRAME
JOHNSON CONTROLS# 70-022226-00B

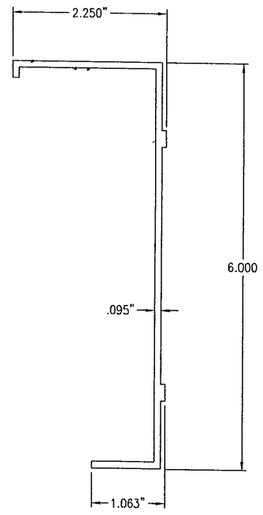

ITEM 4 – JAMB FRAME
JOHNSON CONTROLS# 70-022227-00B

FOR OFFICE USE ONLY

Approved as complying with the Florida Building Code
Date 2/14/2013
NOA# 12-1115.05
Miami Dade Product Control
By

DANIEL J. RAU 10/5/2012
LICENSE NO. 63636
STATE OF FLORIDA
PROFESSIONAL ENGINEER

ENGINEER OF RECORD
DANIEL J. RAU
ENGINEERING DISCIPLINE
CIVIL ENGINEER
REGISTRATION NUMBER
STATE OF FLORIDA #0063636

DWN. BY:	CHK. BY:	APP'VD. BY:	APP'VD. BY:
DRP			
DATE: 8/20/12	DATE:	DATE:	DATE:

SHEET 36 OF 38

CHANGE LETTER	REVISION DESCRIPTION	DWN. BY:	CHK'D. BY:	APP'VD. BY:	APP'VD. BY:	DATE

Johnson Controls

PLOT SCALE: NONE
ECN 4494
DATE: 8-20-12

TITLE: LH-1250 LOUVER ALTERNATE ATTACHMENT TABLES

DWG. NO.: 60-022272-00D

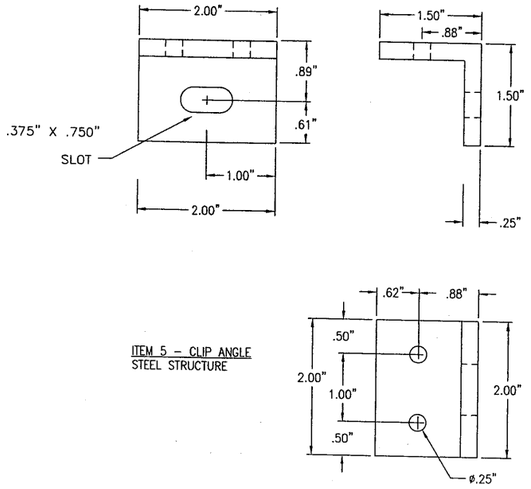

ITEM 5 – CLIP ANGLE
STEEL STRUCTURE

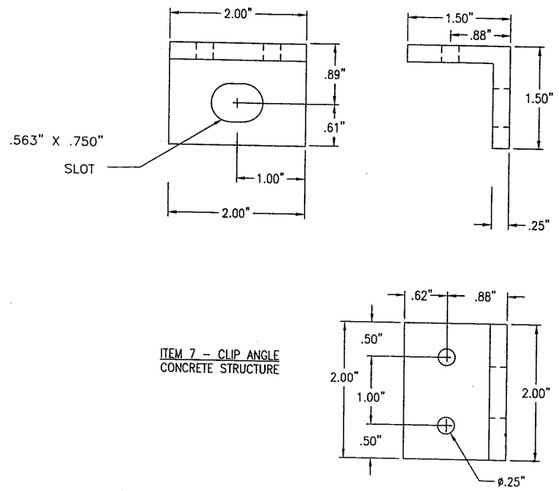

ITEM 7 – CLIP ANGLE
CONCRETE STRUCTURE

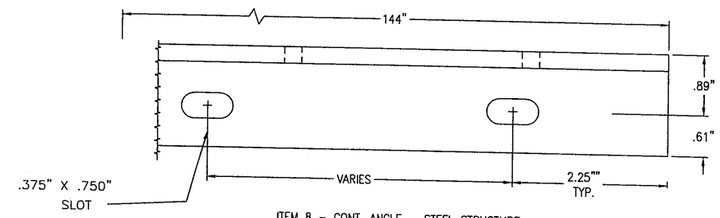

ITEM 8 – CONT. ANGLE – STEEL STRUCTURE
.25 THICK

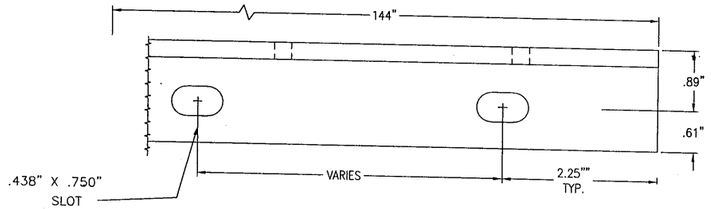

ITEM 9 – CONT. ANGLE – CONCRETE STRUCTURE
.25 THICK

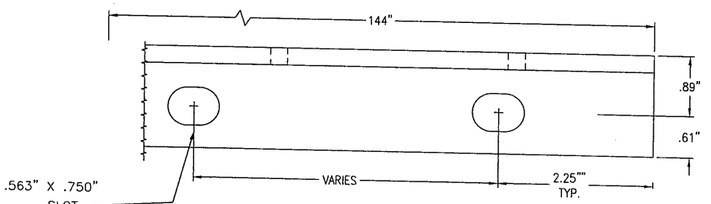

ITEM 10 – CONT. ANGLE – WOOD STRUCTURE
.25 THICK

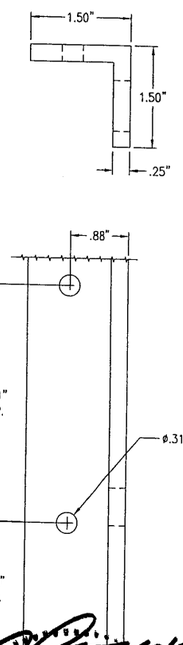

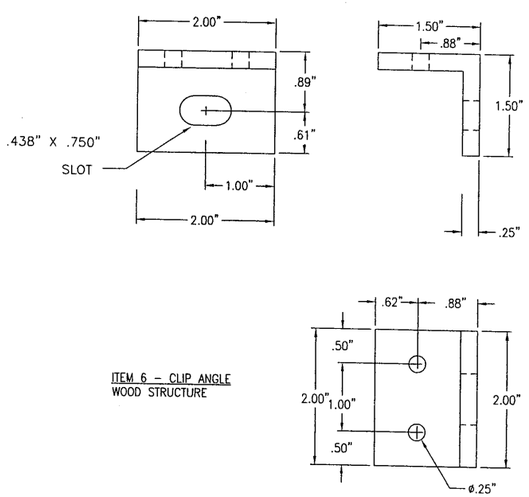

ITEM 6 – CLIP ANGLE
WOOD STRUCTURE

10/5/2012

DANIEL J. RAU
LICENSE
NO. 63636
STATE OF FLORIDA
PROFESSIONAL ENGINEER

FOR OFFICE USE ONLY

Approved as complying with the Florida Building Code
Date 2/14/2013
NOA# 12-1115.05
Miami Dade Product Control
By

ENGINEER OF RECORD	DANIEL J. RAU
ENGINEERING DISCIPLINE	CIVIL ENGINEER
REGISTRATION NUMBER	STATE OF FLORIDA #0063636
DWN. BY: DRP	DATE: 8/20/12
CHK. BY:	DATE:
APPV'D. BY:	DATE:
APPV'D. BY:	DATE:
SHEET 37 OF 38	
CHANGE LETTER	REVISION DESCRIPTION
DWN. BY:	CHK'D. BY:
APPV'D. BY:	APPV'D. BY:
DATE	
Johnson Controls	
PLOT SCALE	NONE
ECN 4494	DATE: 8-20-12
TITLE	LH-1250 LOUVER ALTERNATE ATTACHMENT TABLES
DWG. NO.	60-022272-00D

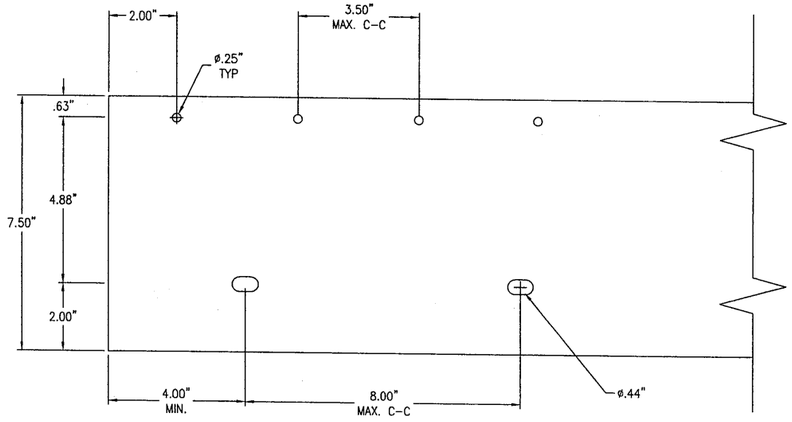

ITEM 11 - CONT. FLAT PLATE
.25 THICK - 5052-H32 AL
REQUIRES ITEM #14 FOR LOUVERS OVER 84" IN HEIGHT

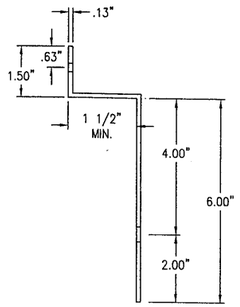

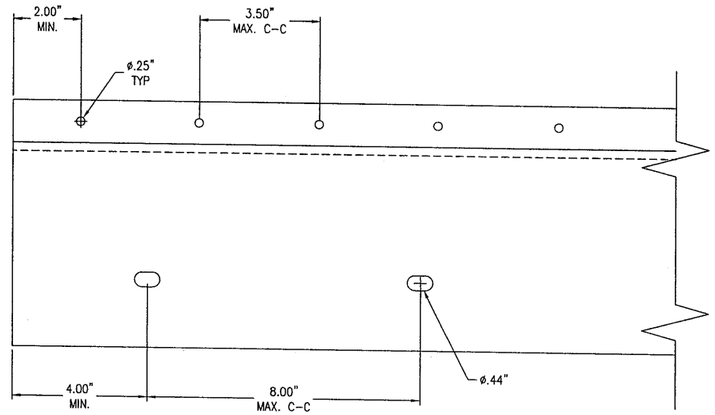

ITEM 13 - JAMB CONT. Z SHAPE PLATE
.125 THICK - 3003-H14 AL

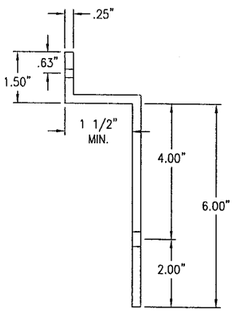

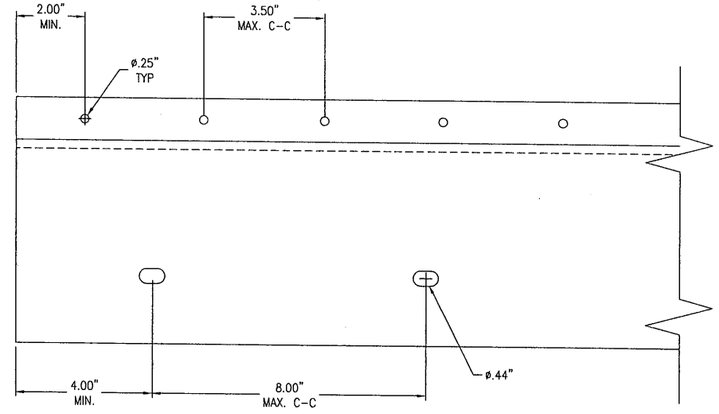

ITEM 12 - HEAD/SILL CONT. Z SHAPE PLATE
5052-H32 AL

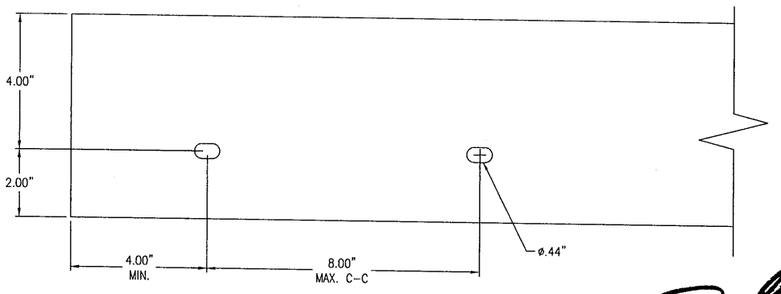

ITEM 14 - CONT. - REINFORCEMENT PLATE
.125" THICK - 3003-H14 AL

TABLE #2			
LOUVER HEIGHT	ITEM #12 Z PLATE THICKNESS	MATERIAL	NOTE
6" - 21"	.125"	3003-H14 AL	-
21" - 84"	.25"	5052-H32 AL	-
84" - 120"	.25"	5052-H32 AL	NEED ITEM #14

FOR OFFICE USE ONLY

Approved as complying with the Florida Building Code
Date 2/14/2013
NOA# 12-1115.05
Miami Dade Product Control
By

DANIEL J. RAU 10/5/2012
LICENSE NO. 63636
STATE OF FLORIDA
PROFESSIONAL ENGINEER

ENGINEER OF RECORD
DANIEL J. RAU
ENGINEERING DISCIPLINE
CIVIL ENGINEER
REGISTRATION NUMBER
STATE OF FLORIDA #0063636

CHANGE LETTER	REVISION DESCRIPTION	DWN. BY:	CHK'D. BY:	APPV'D. BY:	APPV'D. BY:	DATE

DWN. BY: DRP | CHK. BY: | APPV'D. BY: | APPV'D. BY:
DATE: 8/20/12 | DATE: | DATE: | DATE:

SHEET 38 OF 38

Johnson Controls

PLOT SCALE: NONE
ECN 4494
DATE: 8-20-12

TITLE
LH-1250 LOUVER ALTERNATE ATTACHMENT TABLES

DWG. NO.
60-022272-00D