MIAMI-DADE COUNTY
PRODUCT CONTROL SECTION
11805 SW 26 Street, Room 208
Miami, Florida 33175-2474
T (786) 315-2590 F (786) 315-2599
www.miamidade.gov/economy

DEPARTMENT OF REGULATORY AND ECONOMIC RESOURCES (RER)
BOARD AND CODE ADMINISTRATION DIVISION

NOTICE OF ACCEPTANCE (NOA)

Quality Engineered Products Co., Inc.
4506 Quality Lane
Tampa, FL 33634

SCOPE:

This NOA is being issued under the applicable rules and regulations governing the use of construction materials. The documentation submitted has been reviewed and accepted by Miami-Dade County RER -Product Control Section to be used in Miami Dade County and other areas where allowed by the Authority Having Jurisdiction (AHJ).
This NOA shall not be valid after the expiration date stated below. The Miami-Dade County Product Control Section (In Miami Dade County) and/or the AHJ (in areas other than Miami Dade County) reserve the right to have this product or material tested for quality assurance purposes. If this product or material fails to perform in the accepted manner, the manufacturer will incur the expense of such testing and the AHJ may immediately revoke, modify, or suspend the use of such product or material within their jurisdiction. RER reserves the right to revoke this acceptance, if it is determined by Miami-Dade County Product Control Section that this product or material fails to meet the requirements of the applicable building code.

This product is approved as described herein, and has been designed to comply with the Florida Building Code, including the High Velocity Hurricane Zone.

DESCRIPTION: 16 ga. Outswing Glazed Commercial Steel Door w/Panic Device & Mortise Lock -LMI

APPROVAL DOCUMENT: Drawing No. **QQ2**, titled "16 ga Out swinging Glazed Commercial Steel Door ", sheets 1 through 13 of 13, prepared by manufacturer, dated 07/08/08, signed and sealed by David M. Schonacher, P. E. , bearing the Miami-Dade County Product Control Revision stamp with the Notice of Acceptance number and expiration date by the Miami-Dade County Product Control Section.

MISSILE IMPACT RATING: Large and Small Missile Impact Resistant

Limitation: 1. See respective Design Pressure Ratings Vs Single or Double Doors & Lock hardware types.
2. Approved EPS core by Dynaplast (Former Apache) or Carpenter Co. having current NOA

LABELING: Each unit shall bear a permanent label with the manufacturer's name or logo, city, state and series and following statement: "Miami-Dade County Product Control Approved", noted herein.

RENEWAL of this NOA shall be considered after a renewal application has been filed and there has been no change in the applicable building code negatively affecting the performance of this product.

TERMINATION of this NOA will occur after the expiration date or if there has been a revision or change in the materials, use, and/or manufacture of the product or process. Misuse of this NOA as an endorsement of any product, for sales, advertising or any other purposes shall automatically terminate this NOA. Failure to comply with any section of this NOA shall be cause for termination and removal of NOA.

ADVERTISEMENT: The NOA number preceded by the words Miami-Dade County, Florida, and followed by the expiration date may be displayed in advertising literature. If any portion of the NOA is displayed, then it shall be done in its entirety.

INSPECTION: A copy of this entire NOA shall be provided to the user by the manufacturer or its distributors and shall be available for inspection at the job site at the request of the Building Official.

This NOA **revises NOA # 07-1017.10** and consists of this page 1 and evidence pages E-1 & E-2, as well as approval document mentioned above.

The submitted documentation was reviewed by **Ishaq I. Chanda, P.E.**

MIAMI-DADE COUNTY APPROVED
1/24/13

NOTICE OF ACCEPTANCE: EVIDENCE SUBMITTED

A. DRAWINGS

1. Manufacturer's die drawings and sections (Submitted under file # **07-1017.10**)
2. Drawing No. **QQ2**, titled "16 ga Out swinging Glazed Commercial Steel Door", sheets 1 through 13 of 13, prepared by manufacturer, dated 07/08/08, signed and sealed by David M. Schonacher, P. E.

B. TESTS (Submitted under file # **07-1017.10 /04-0823.04)**

1. Test reports on 1) Air Infiltration Test, per FBC TAS 202-94
   2) Uniform Static Air Pressure Test, Loading per FBC, TAS 202.
   3) Water Resistance Test per FBC, TAS 202-94 (Not Performed).
   4) Large Missile Impact Test per FBC, TAS 201-94
   5) Cyclic Wind Pressure Loading per FBC, TAS 203-94
   6) Forced Entry Test, per FBC and TAS 202-94

Along with marked-up drawings and installation diagram of Commercial Steel Doors w/ panic Devices, prepared by Certified Testing Lab Inc., Test Report No. **CTLA 1276W,** dated Nov. 11, 2004 and Test Report No. **CTLA 976WA-2,** dated **07/12/04**, both signed and sealed by Ramesh Patel, P. E.

2. Test reports on 1) Air Infiltration Test, per FBC TAS 202-94
   2) Uniform Static Air Pressure Test, Loading per FBC, TAS 202.
   3) Water Resistance Test per FBC, TAS 202-94 (Not Performed).
   4) Large Missile Impact Test per FBC, TAS 201-94
   5) Cyclic Wind Pressure Loading per FBC, TAS 203-94
   6) Forced Entry Test, per FBC and TAS 202-94

Along with marked-up drawings and installation diagram of Single Commercial Steel Doors, prepared by Certified Testing Lab Inc., Test Report No. **CTLA 1238W,** dated **08/13/04**, signed and sealed by Ramesh Patel, P. E.

3. Additional Test reports **HTL-0050-4007-96** and **HTL-0050-0104-96** tested per SFBC PA 201, 202 & 203-94, issued by Hurricane Testing lab, dated 04-17-96 and 01/15/96 both signed and sealed by Timothy S. Marshall, P.E. (submitted under files 00-0726.01/03-0708.02)

C. CALCULATIONS

1. Anchor verification calculations, dated 10/25/2005, prepared, signed and sealed by David M. Schonacher, Jr., P.E. (Submitted under files # **07-1017.10 / #04-0823.04**).
2. Glazing complies w/ ASTME-1300-02 & -04

D. QUALITY ASSURANCE

1 Miami Dade Department of Regulatory and Economic Resources (RER)

E. MATERIAL CERTIFICATIONS

1. Tensile test report prepared by prepared by Certified Testing Lab, Test Report No. **CTL-1023J (CTLA114W),** tested per ASTM E-A370-97, dated 12/02/03 signed and sealed by Ramesh A. Patel, P. E. (Submitted under file # **07-1017.10**)
2. Notice of Acceptance No. **11-0926.07** issued to Dyplastic Products, LLC (former Apache Products Co) for "EPS-Expanded Polystyrene Insulation", expiring on 01/11/2017.
3. Notice of Acceptance No. **11-1102.11** issued to Eastman chemical Company (Former Solutia, Inc.) for "Saflex clear & color Interlayer", expiring on 05/21/2016.
4. Notice of Acceptance No. **08-1118.07** issued to Oldcastle Building Envelope, Inc. (N.J.)(Former Oldcastle, Inc.) for "Storm glass for laminated glass", expiring on 12/01/2013.

Ishaq I. Chanda

Ishaq I. Chanda, P.E.
Product Control Examiner
NOA No. 12-1115.06
Expiration Date: July 11, 2013
Approval Date: January 31, 2013

NOTICE OF ACCEPTANCE: EVIDENCE SUBMITTED

F. STATEMENTS

1. Statement letter of conformance to FBC 2010 and "no financial interest", dated 01/15/13, signed and sealed by David M. Schonacher Jr., P. E.
2. Statesman letter of conformance to FBC 2007 and "No financial interest", dated 07/08/2008, signed and sealed by David M. Schonacher Jr. , P. E. (Submitted under file # **07-1017.10)**
3. Statement letter of compliance, as a part of the above referenced test reports.

G. OTHER

1. This **revises NOA # 07-1017.10**, expiring July 11, 2013.

Ishaq I. Chanda

Ishaq I. Chanda, P.E.
Product Control Examiner
NOA No. 12-1115.06
Expiration Date: July 11, 2013
Approval Date: January 31, 2013

GLAZED STEEL DOOR WITH DEADLOCK

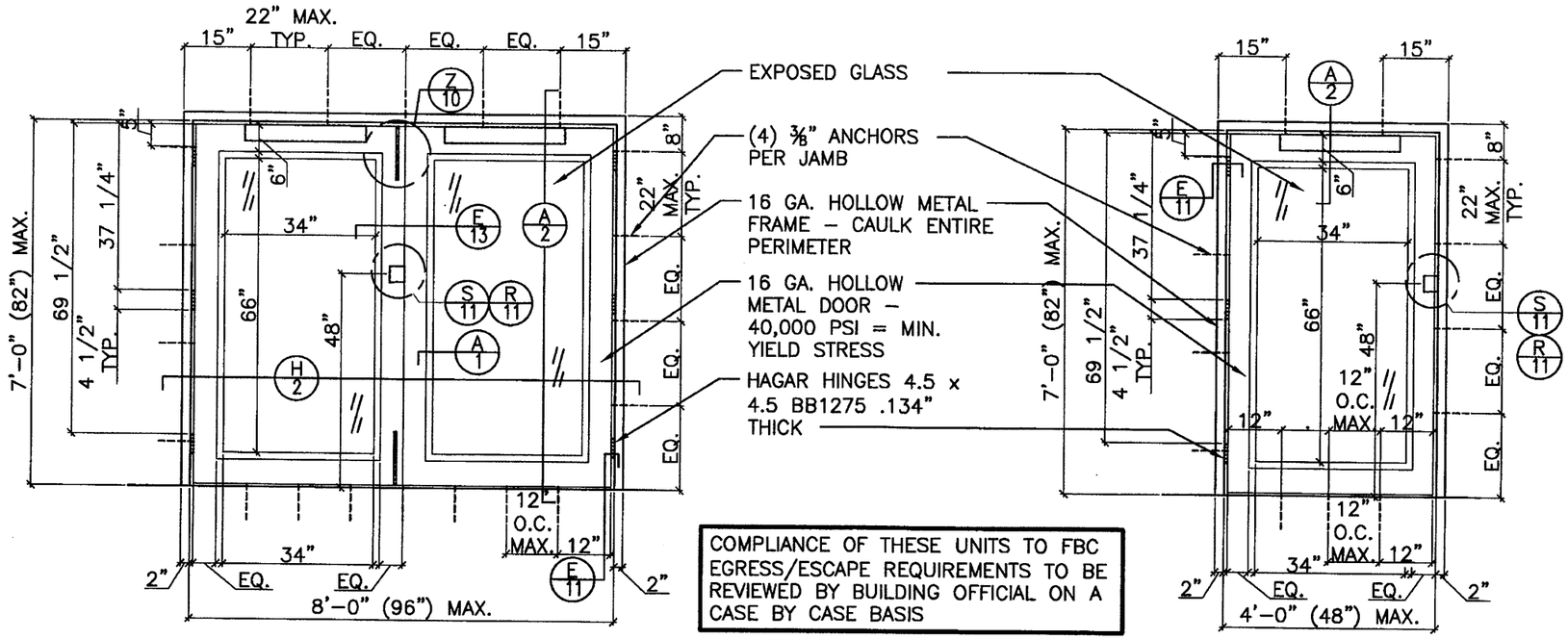

COMPLIANCE OF THESE UNITS TO FBC EGRESS/ESCAPE REQUIREMENTS TO BE REVIEWED BY BUILDING OFFICIAL ON A CASE BY CASE BASIS

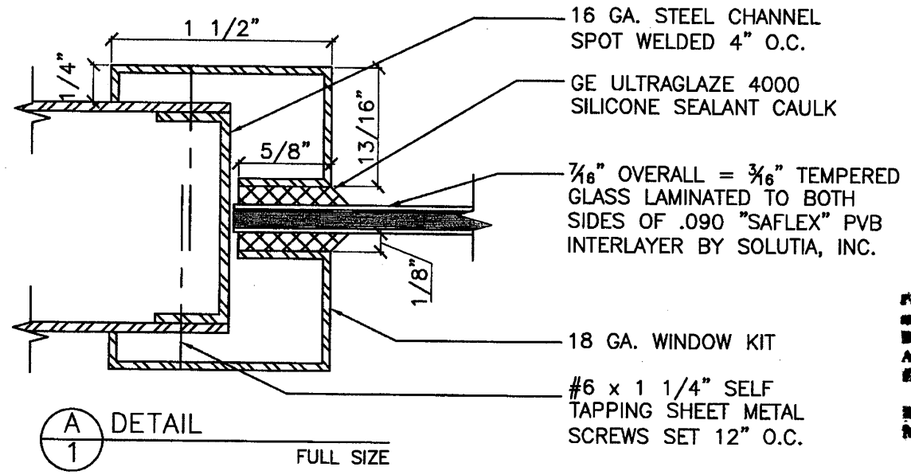

A/1 DETAIL
FULL SIZE

NOTE:
ALL DOORS AND FRAMES ARE BONDERIZED AND GIVEN ONE COAT OF RED RUST INHIBITIVE PRIMER.

LOCK FUNCTION TESTED:
ARROW SERIES
D-41 DEADBOLT

DESIGN PRESSURE RATING W/ DEADBOLT:
+ 40 PSF / – 50 PSF

HURRICANE PROTECTION SHUTTERS ARE NOT REQUIRED

PRODUCT REVIEWED as complying with the Florida Building Code Acceptance No. 12-1115.06 Expiration Date July 11, 2013 By Ishwar L. Chandra Miami-Dade Product Control Division

PRODUCT RENEWED as complying with the Florida Building Code Acceptance No. 07-1017.10 Expiration Date July 11, 2013 By Ishwar L. Chandra Miami-Dade Product Control Division

INDEX OF DRAWINGS:

	SHEETS:
GLAZED STEEL DOOR WITH DEADLOCK	1 THRU 2
GLAZED STEEL DOOR WITH RIM EXIT DEVICE AND REMOVABLE MULLION	3 THRU 4
GLAZED DOOR WITH MORTISE LOCK (SINGLE DOOR ONLY)	5 THRU 6
GLAZED STEEL DOOR WITH "DORMA" RIM EXIT DEVICE AND REMOVABLE MULLION	7 THRU 8
DOOR CONSTRUCTION, DOOR AND FRAME REINFORCEMENTS, ANCHOR DETAILS, AND COMMON DETAILS	9 THRU 13

JUL 0 8 2008

DAVID M. SCHONACHER, P.E.
FLORIDA REG. # 63131
(NOT VALID WITHOUT SEAL)

16 GA. OUTSWINGING GLAZED COMMERCIAL STEEL DOOR

4506 QUALITY LANE
TAMPA, FLORIDA 33634
(813) 885-1693

Quality Engineered Products Co., Inc.

REVISIONS
1 6-28-2000
2 2-23-2005
3 7-8-2008

DRAWING NUMBER QQ2

HURRICANE TEST APPROVAL
QQ2

SHEET 1 OF 13

DATE 7-8-08

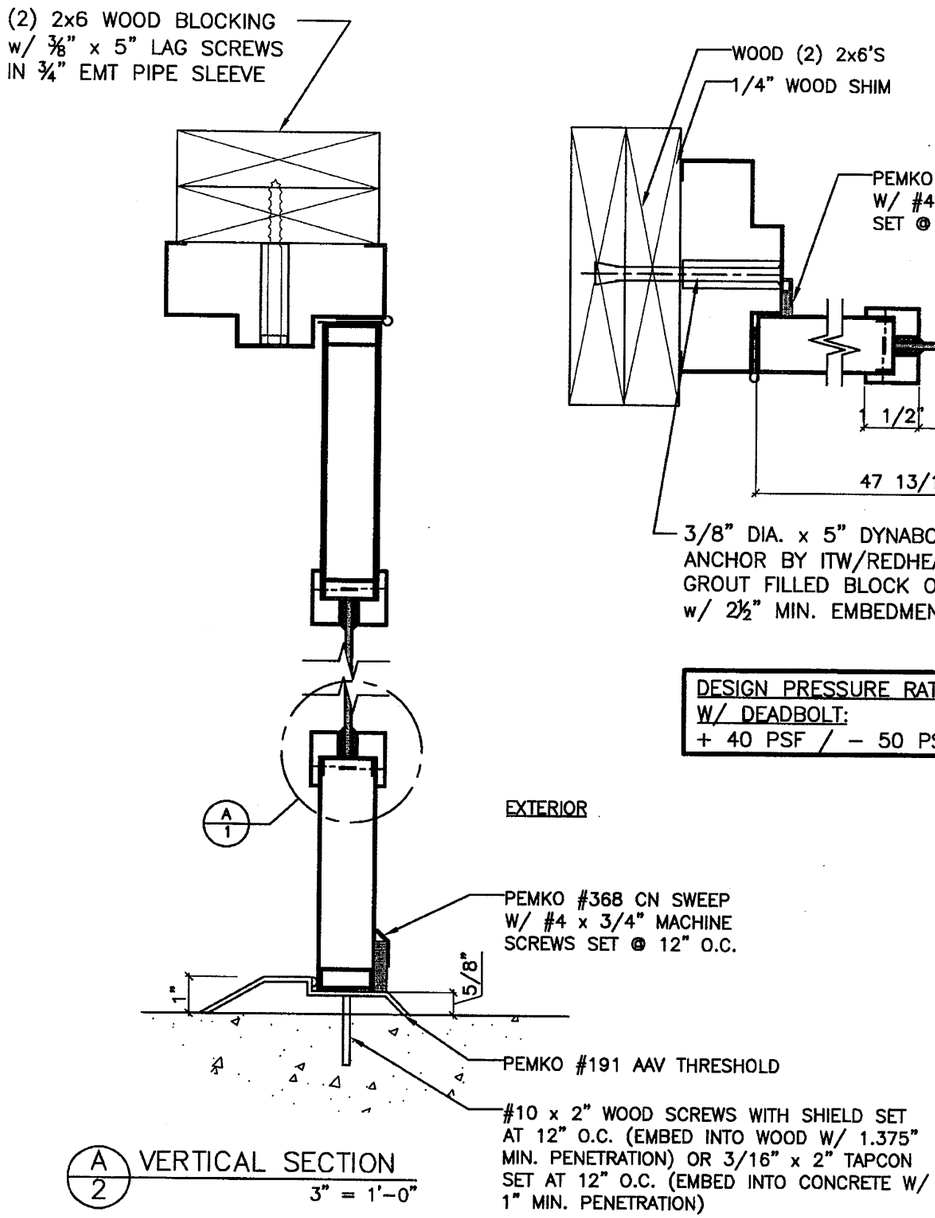

A/2 VERTICAL SECTION
3" = 1'-0"

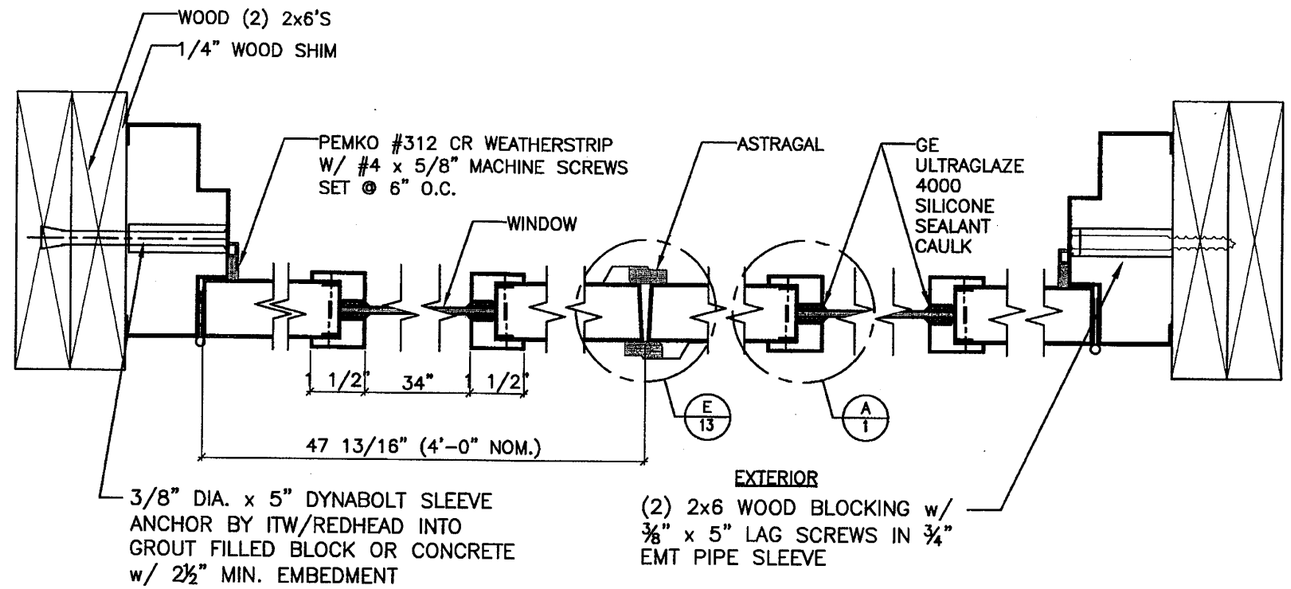

H/2 HORIZONTAL SECTION
3" = 1'-0"

DESIGN PRESSURE RATING W/ DEADBOLT:
+ 40 PSF / – 50 PSF

PRODUCT RENEWED
as complying with the Florida Building Code
Acceptance No. 07-1017.10
Expiration Date 04/14/2013
By Ishaq I. Chanda
Miami-Dade Product Control Division

PRODUCT REVISED
as complying with the Florida Building Code
Acceptance No. 12-1115.06
Expiration Date 7/11/13
By Ishaq I. Chanda
Miami Dade Product Control

JUL 0 8 2008

DAVID M. SCHONACHER, P.E.
FLORIDA REG. # 63131
(NOT VALID WITHOUT SEAL)

GLAZED STEEL DOOR WITH DEADLOCK

16 GA. OUTSWINGING GLAZED COMMERCIAL STEEL DOOR

4506 QUALITY LANE
TAMPA, FLORIDA 33634
(813) 885-1693

Quality Engineered Products Co., Inc.

REVISIONS
1 6-28-2000
2 2-23-2005
3 7-8-2008

DRAWING NUMBER QQ2

HURRICANE TEST APPROVAL
QQ2

SHEET 2 OF 13

DATE 7-8-08

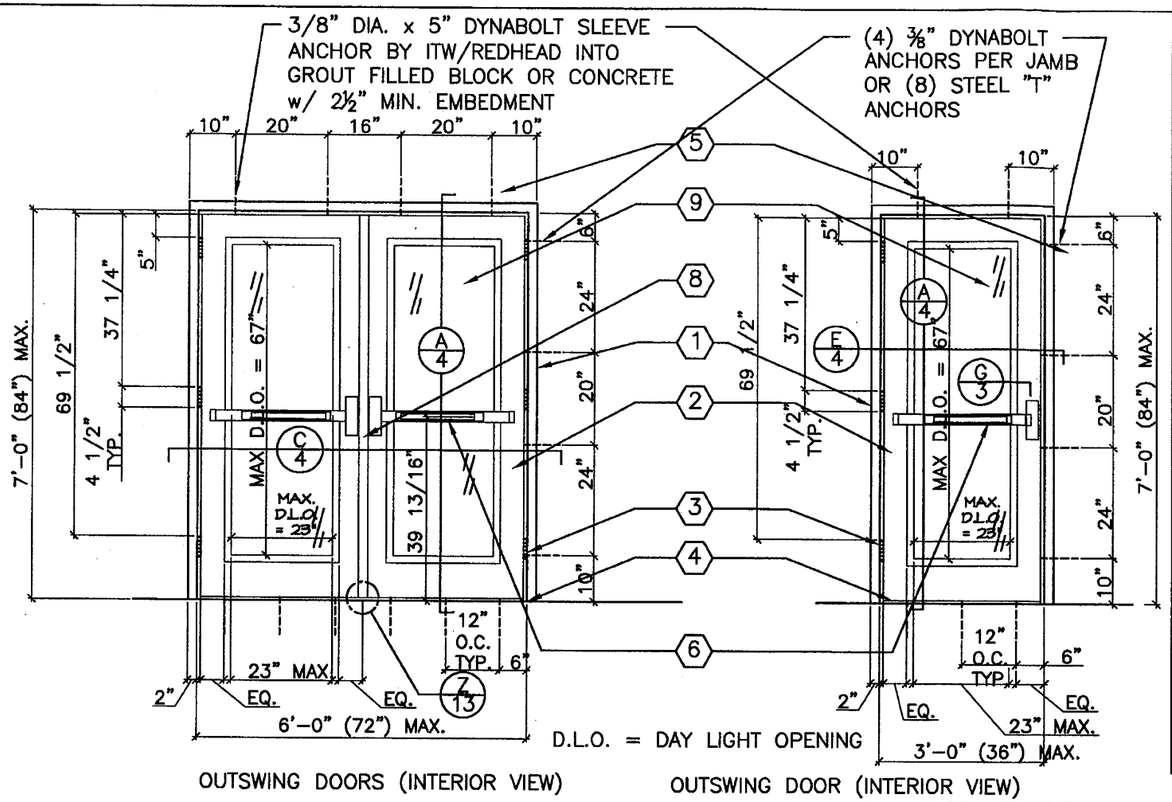

OUTSWING DOORS (INTERIOR VIEW)

OUTSWING DOOR (INTERIOR VIEW)

ITEM #	QUANTITY	BILL OF MATERIALS
1	1	16 GA. MIN., 14 GA. MAX., STEEL HEAD/JAMB/SILL FRAME
2	2	16 GA. MIN, 14 GA. MAX., FULL GLASS STEEL DOOR – Fy MIN. 49,000 PSI
3	6	HAGAR HINGES BB1279 4½" x 4½" x 0.134" THICK
4	1	PEMKO 2005AV THRESHOLD
5	18	3/8" X 5" DYNABOLT SLEEVE ANCHOR BY ITW/REDHEAD w/ 3/4" EMT WELDED PIPE SLEEVE
6	2	SARGENT RIM EXIT DEVICE HC8800 OR VON DUPRIN RIM EXIT DEVICE 98/99 OR CORBIN RUSWIN RIM EXIT DEVICE ED5200
7	AS REQ.	EPS POLYSTYRENE FOAM CORE BY APACHE PRODUCTS
8	1	PRECISION FL822 REMOVABLE MULLION
9	AS REQ.	7/16" LAMINATED GLASS (3/16" HS + 0.120" STORMGLASS INTERLAYER BY OLD CASTLE +3/16" HS) BY OLD CASTLE GLASS
10	AS REQ.	PRECISION CORNING #995 STRUCTURAL SILICONE SEALANT

DESIGN PRESSURE RATING VS. EXIT DEVICE PART #6 & PRECISION REMOVABLE MULLION FL822	POSITIVE	NEGATIVE
SPEC #1 – PRECISION FL2100 RIM EXIT DEVICE OR	+65 PSF *	–65 PSF
SPEC #2 – PRECISION 1100 RIM EXIT DEVICE OR	+65 PSF *	–65 PSF
SPEC #3 – SARGENT RIM EXIT DEVICE HC8800 OR	+70 PSF *	–70 PSF
SPEC #4 – VON DUPRIN RIM EXIT DEVICE 98/99 OR	+70 PSF *	–70 PSF
SPEC #5 – CORBIN RUSWIN RIM EXIT DEVICE ED5200	+65 PSF *	–65 PSF

* = NOT RATED WHERE WATER INFILTRATION IS NEEDED.

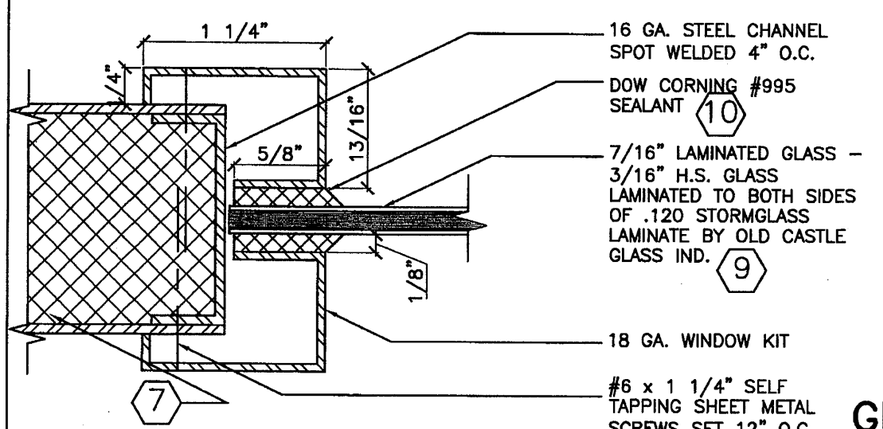

G/3 HORIZONTAL SECTION
FULL SIZE

PRODUCT REVISED
as complying with the Florida Building Code
Acceptance No. 12-1115.06
Expiration Date 7/11/13
By Ishaq I. Chanda
Miami Dade Product Control

PRODUCT RENEWED
as complying with the Florida Building Code
Acceptance No. 07-1017-10
Expiration Date July 11, 2013
By Ishaq I. Chanda
Miami Dade Product Control Division

GLAZED STEEL DOOR WITH RIM EXIT DEVICE AND REMOVABLE MULLION

JUL 08 2008

DAVID M. SCHONACHER, P.E.
FLORIDA REG. # 63131
(NOT VALID WITHOUT SEAL)

16 GA. OUTSWINGING GLAZED COMMERCIAL STEEL DOOR

4506 QUALITY LANE
TAMPA, FLORIDA 33634
(813) 885-1693

Quality Engineered Products Co., Inc.

REVISIONS
1 6-28-2000
2 2-23-2005
3 7-8-2008

DRAWING NUMBER QQ2

HURRICANE TEST APPROVAL
QQ2

SHEET 3 OF 13

DATE 7-8-08

S:\Projects\2005\05-035 Quality Engineered Products\Other Disciplines\Quality Engineered Products\05-20-08\AVANTI QEP-SHEET3.dwg Plotted: Jul 08, 2008 - 4:14pm by kevinm

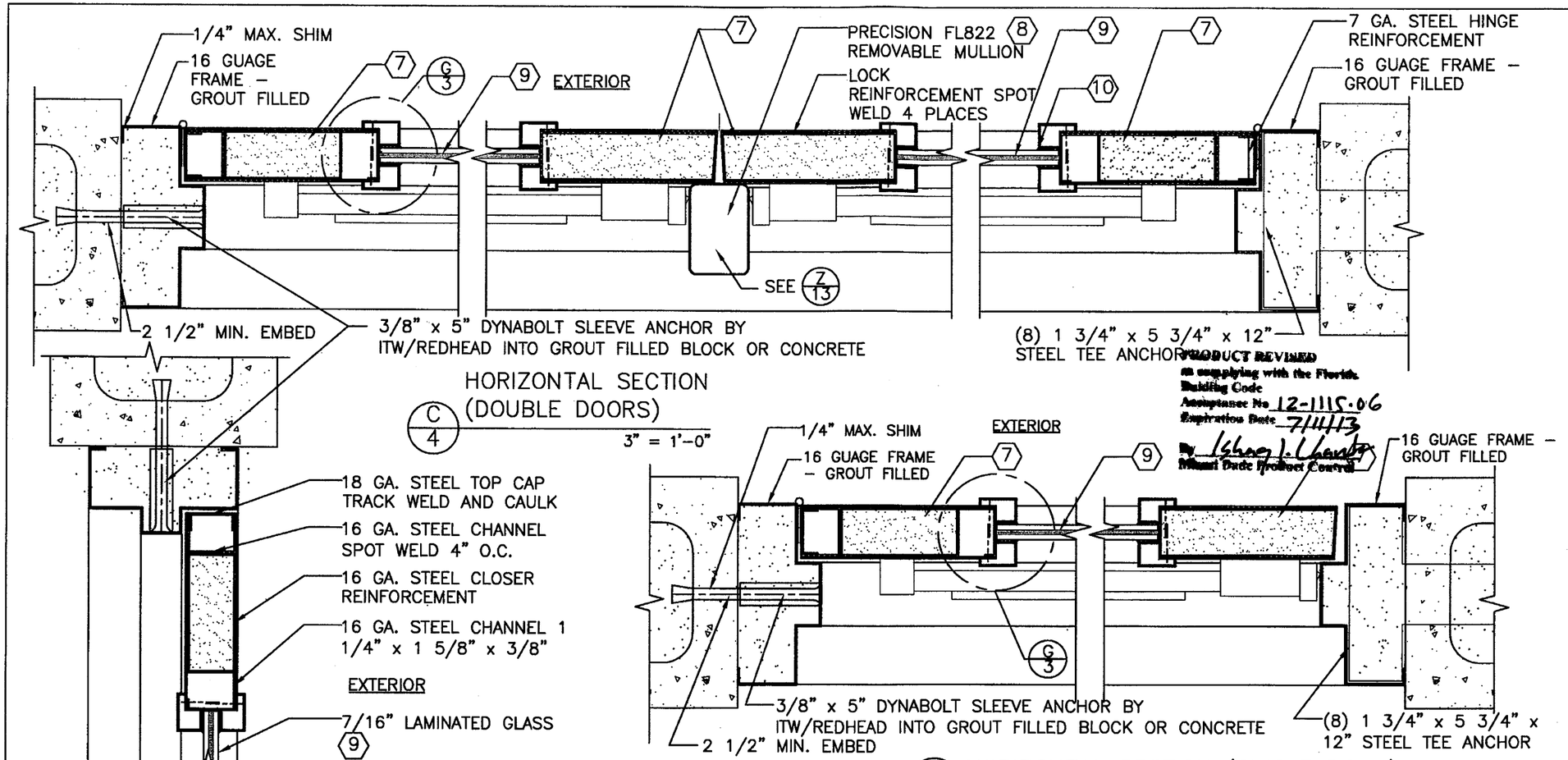

PRODUCT REVIEWED as complying with the Florida Building Code Acceptance No 12-1115.06 Expiration Date 7/11/13 By Ishaq I. Chanda Miami Dade Product Control

PRODUCT RENEWED as complying with the Florida Buiding Code Acceptance No 07-1017.10 Expiration Date July 11, 2013 By Ishaq I. Chanda Miami Dade Product Control Division

DESIGN PRESSURE RATING VS. EXIT DEVICE PART #6 & PRECISION REMOVABLE MULLION FL822	POSITIVE	NEGATIVE
SPEC #1 – PRECISION FL2100 RIM EXIT DEVICE OR	+65 PSF *	–65 PSF
SPEC #2 – PRECISION 1100 RIM EXIT DEVICE OR	+65 PSF *	–65 PSF
SPEC #3 – SARGENT RIM EXIT DEVICE HC8800 OR	+70 PSF *	–70 PSF
SPEC #4 – VON DUPRIN RIM EXIT DEVICE 98/99 OR	+70 PSF *	–70 PSF
SPEC #5 – CORBIN RUSWIN RIM EXIT DEVICE ED5200	+65 PSF *	–65 PSF

* = NOT RATED WHERE WATER INFILTRATION IS NEEDED.

GLAZED STEEL DOOR WITH RIM EXIT DEVICE AND REMOVABLE MULLION

JUL 8 2008

DAVID M. SCHONACHER, P.E.
FLORIDA REG. # 63131
(NOT VALID WITHOUT SEAL)

16 GA. OUTSWINGING GLAZED COMMERCIAL STEEL DOOR

4506 QUALITY LANE
TAMPA, FLORIDA 33634
(813) 885-1693

Quality Engineered Products Co., Inc.

REVISIONS
1 6-28-2000
2 2-23-2005
3 7-8-2008

DRAWING NUMBER QQ2

HURRICANE TEST APPROVAL
QQ2

SHEET 4 OF 13

DATE 7-8-08

GLAZED STEEL DOOR WITH MORTISE LOCK

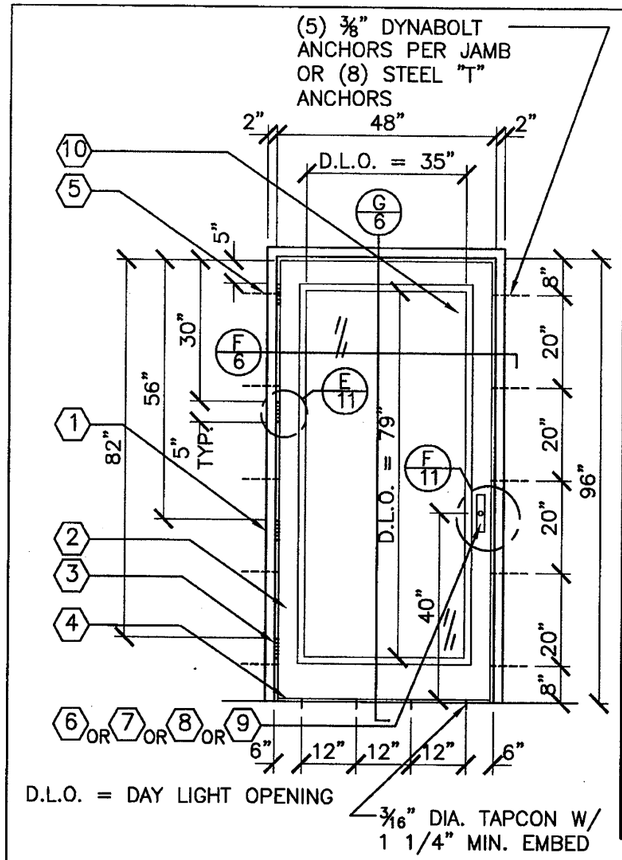

OUTSWINGING DOOR (INTERIOR VIEW)
3/8" = 1'-0"

ITEM #	QUANTITY	BILL OF MATERIALS
1	1	16 GA. MIN. 14 GA. MAX. H.M. FRAME
2	1	16 GA. MIN, 14 GA. MAX. FULL GLASS H.M. DOOR
3	4	HAGAR HINGES BB1279 4.5 x 4.5 .134" THICK
4	1	PEMKO 2005AV THRESHOLD
5	10	3/8" X 5" ANCHOR BOLTS (U.S. ANCHOR)
6	1	CORBIN RUSWIN MI2200 MORTISE LOCK
7	1	DORMA ML9953 MORTISE LOCK
8	1	SCHLAGE L9456 MORTISE LOCK
9	1	SARGENT 8243 MORTISE LOCK
10	1	7/16" HS LAMINATED GLASS BY OLD CASTLE
11	1	PEMKO 347A TOP DRIP
12	2	PEMKO 68A DOOR TOP WEATHERSTRIP
13	3	PEMKO 303AS WEATHERSTRIP
14	AS REQ'D	DOW CORNING #995 STRUCTURAL SILICONE SEALANT

DESIGN PRESSURE RATING SINGLE DOOR W/ MORTISE LOCK (ITEM #6, 7, 8, & 9)		
	WHERE AIR & WATER INFILTRATION REQUIREMENT IS NEEDED	WHERE AIR & WATER INFILTRATION REQUIREMENT IS NOT NEEDED
POSITIVE	+90 PSF	+90 PSF
NEGATIVE	−90 PSF	−90 PSF

PRODUCT REVISED
as complying with the Florida Building Code
Acceptance No 12-1115.06
Expiration Date 7/11/13
By Ishaq I. Chanda
Miami Dade Product Control

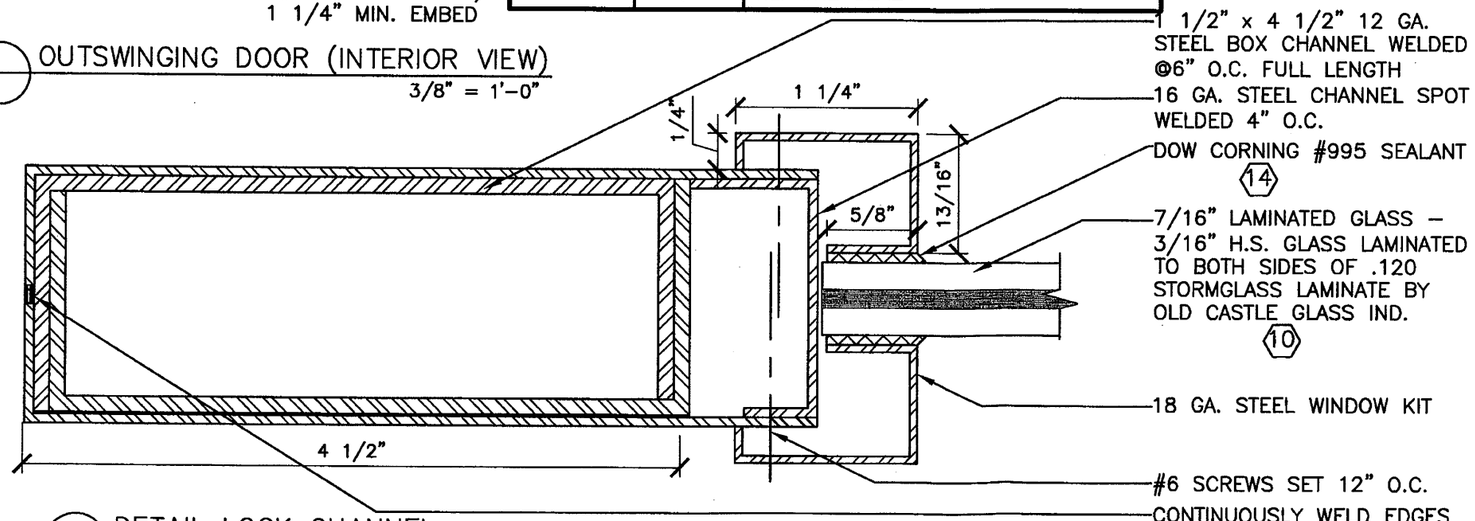

DETAIL LOCK CHANNEL
FULL SIZE

PRODUCT RENEWED
as complying with the Florida Building Code
Acceptance No 07-101710
Expiration Date July 11, 2013
By Ishaq I. Chanda
Miami Dade Product Control Division

JUL 08 2008

DAVID M. SCHONACHER, P.E.
FLORIDA REG. # 63131
(NOT VALID WITHOUT SEAL)

16 GA. OUTSWINGING GLAZED COMMERCIAL STEEL DOOR

4506 QUALITY LANE
TAMPA, FLORIDA 33634
(813) 885-1693
Quality Engineered Products Co., Inc.

REVISIONS
1 6-28-2000
2 2-23-2005
3 7-8-2008

DRAWING NUMBER QQ2

HURRICANE TEST APPROVAL
QQ2

SHEET 5 OF 13

DATE 7-8-08

S:\Projects\2005\05-035 Quality Engineered Products\Other Disciplines\Quality Engineered Products\05-20-08\AVANTI QEP-SHEET5.dwg Plotted: Jul 08, 2008 - 4:15pm by kevinm

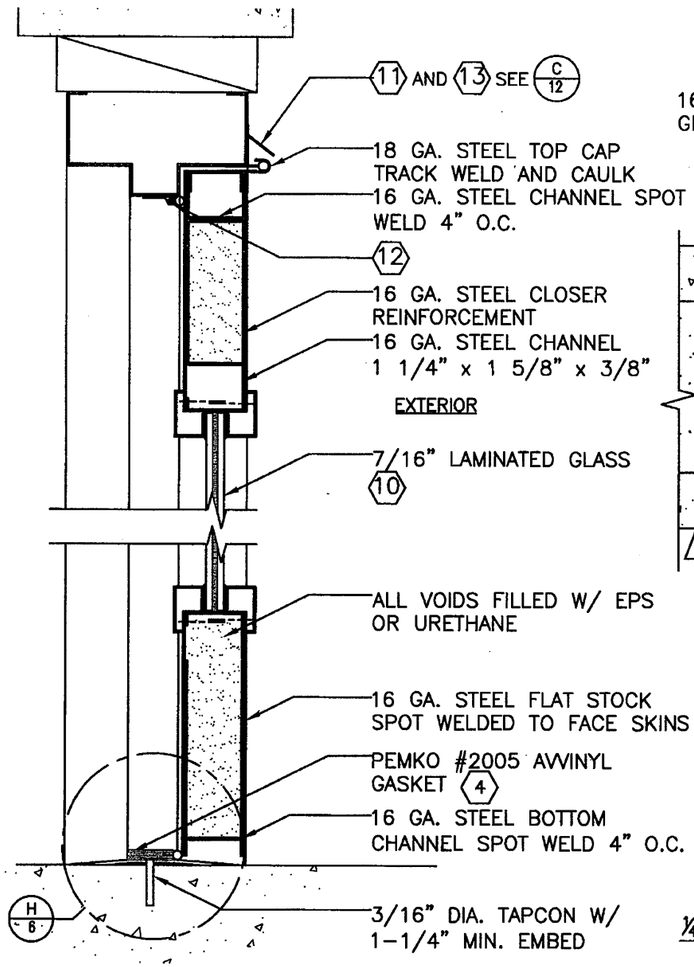

G/6 VERTICAL SECTION
3" = 1'-0"

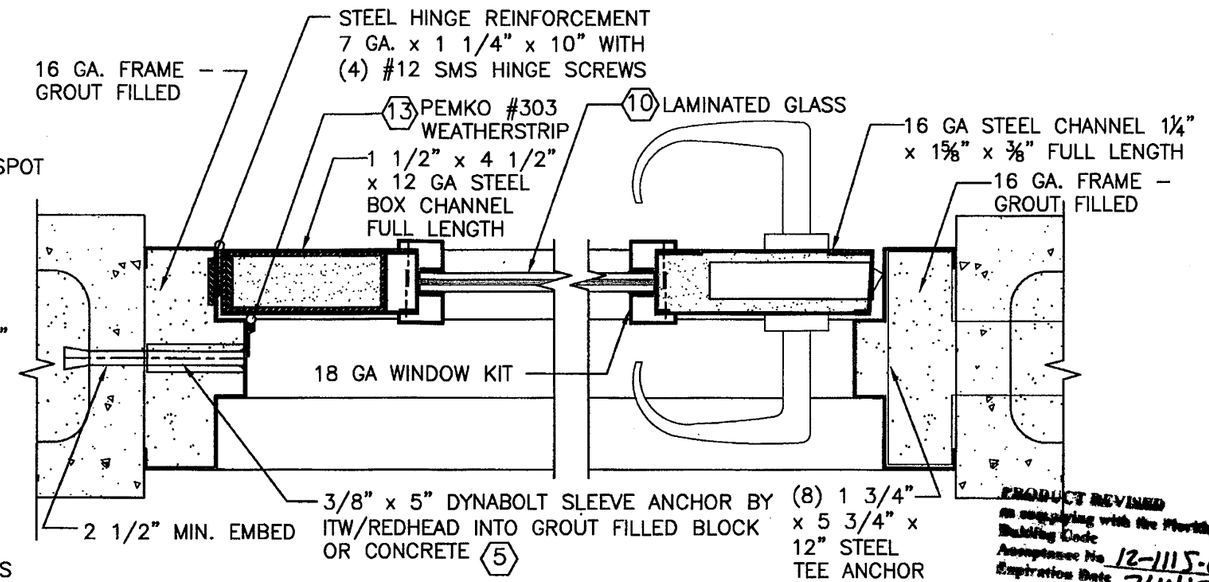

F/6 HORIZONTAL SECTION (SINGLE DOORS)
3" = 1'-0"

PRODUCT REVISED
as complying with the Florida Building Code
Acceptance No. 12-1115.06
Expiration Date 7/4/13
By Ishaq I. Chanda
Miami Dade Product Control

DESIGN PRESSURE RATING SINGLE DOOR W/ MORTISE LOCK (ITEM #6, 7, 8, & 9)		
	WHERE AIR & WATER INFILTRATION REQUIREMENT IS NEEDED	WHERE AIR & WATER INFILTRATION REQUIREMENT IS NOT NEEDED
POSITIVE	+90 PSF	+90 PSF
NEGATIVE	−90 PSF	−90 PSF

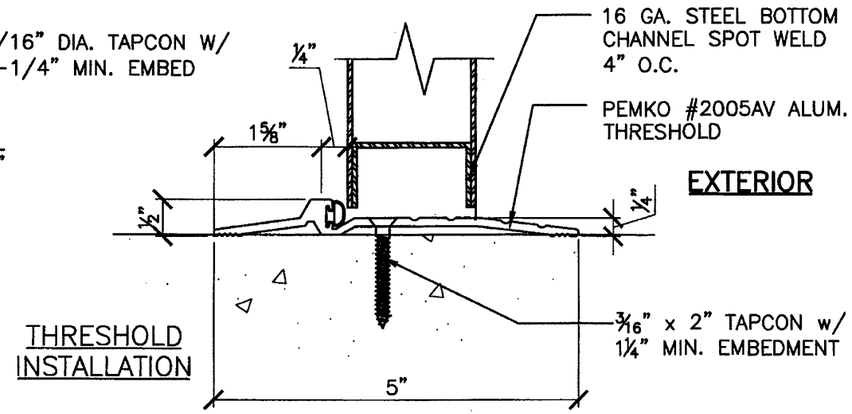

THRESHOLD INSTALLATION

H/6 DETAIL
HALF SIZE

PRODUCT RENEWED
as complying with the Florida Building Code
Acceptance No 07-1017.10
Expiration Date July 11, 2013
By Ishaq I. Chanda
Miami Dade Product Control Division

JUL 08 2008

DAVID M. SCHONACHER, P.E.
FLORIDA REG. # 63131
(NOT VALID WITHOUT SEAL)

16 GA. OUTSWINGING GLAZED COMMERCIAL STEEL DOOR

4506 QUALITY LANE
TAMPA, FLORIDA 33634
(813) 885-1693

Quality Engineered Products Co., Inc.

REVISIONS
1 6-28-2000
2 2-23-2005
3 7-8-2008

DRAWING NUMBER QQ2

HURRICANE TEST APPROVAL
QQ2

SHEET 6 OF 13

DATE 7-8-08

S:\Projects\2005\05-035 Quality Engineered Products\Other Disciplines\Quality Engineered Products\05-20-08\AVANTI QEP-SHEET6.dwg Plotted: Jul 09, 2008 - 12:28pm by davids

GLAZED STEEL DOOR WITH "DORMA" RIM EXIT DEVICE & REMOVABLE MULLION

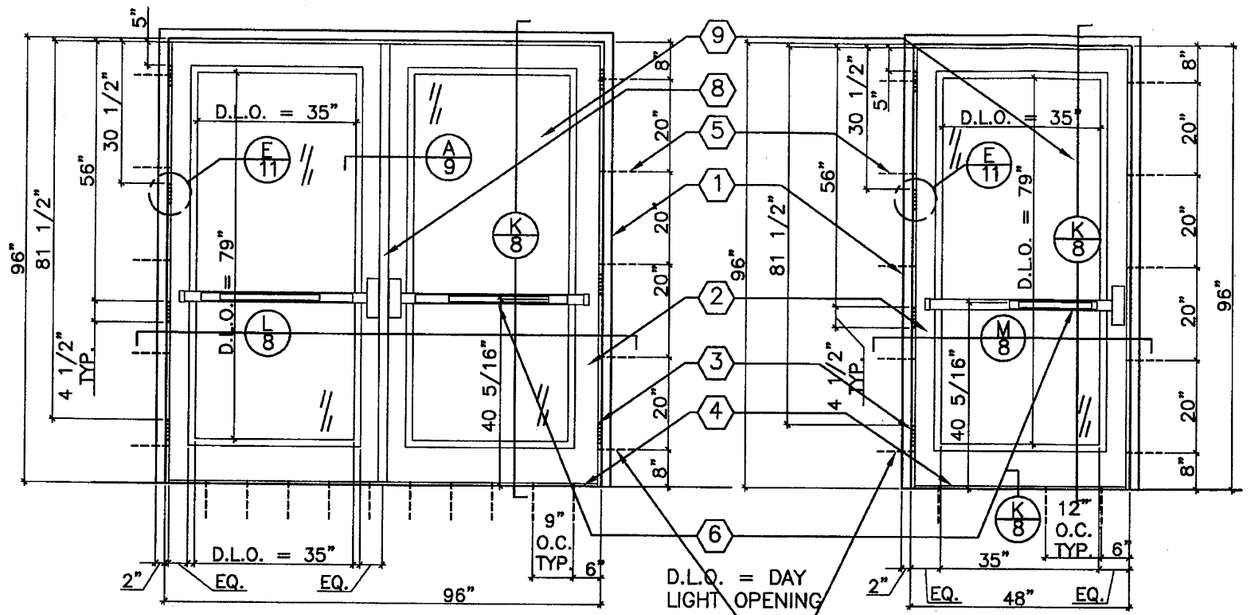

OUTSWINGING PAIR OF DOORS (INTERIOR VIEW)

OUTSWINGING SINGLE DOOR (INTERIOR VIEW)

(5) ⅜" SLEEVE ANCHORS PER JAMB OR (8) STEEL "T" ANCHORS

DESIGN PRESSURE RATING W/ DORMA RIM EXIT & DORMA 1300 REMOVABLE MULLIONS		
	WHERE AIR & WATER INFILTRATION REQUIREMENT IS NEEDED	WHERE AIR & WATER INFILTRATION REQUIREMENT IS NOT NEEDED
POSITIVE	NOT APPROVED	+80 PSF
NEGATIVE	NOT APPROVED	−80 PSF

ITEM #	QUANTITY	BILL OF MATERIALS
1	1	16 GA. MIN. 14 GA. MAX. STEEL HEAD/JAMB/SILL FRAME
2	2	16 GA. MIN, 14 GA. MAX. FULL GLASS STEEL DOOR – FY MIN. 49,000 PSI
3	8	HAGAR HINGES 4.5 x 4.5 BB1279 .134" THICK
4	1	PEMKO 2005AV THRESHOLD
5	10	3/8" X 5" EXPANSION BOLTS (U.S. ANCHOR) W/ 3/4" EMT WELDED PIPE SLEEVE
6	2	DORMA EXIT DEVICE HCF9400 OR HCF9300 X YR08
7	AS REQ'D	EPS POLYSTYRENE FOAM CORE BY APACHE PRODUCTS
8	1	DORMA HC1300 REMOVABLE MULLION (DOUBLE DOORS)
9	AS REQ'D	7/16" LAMINATED GLASS (3/16" HS + .120" INTERLAYER BY OLD CASTLE + 3/16" HS)
10	AS REQ'D	DOW CORNING #995 STRUCTURAL SILICONE SEALANT
11	2	PEMKO 68A DOOR TOP WEATHERSTRIP
12	3	NATIONAL GUARD #130SA WEATHERSTRIP
13	1	PEMKO 347A TOP DRIP

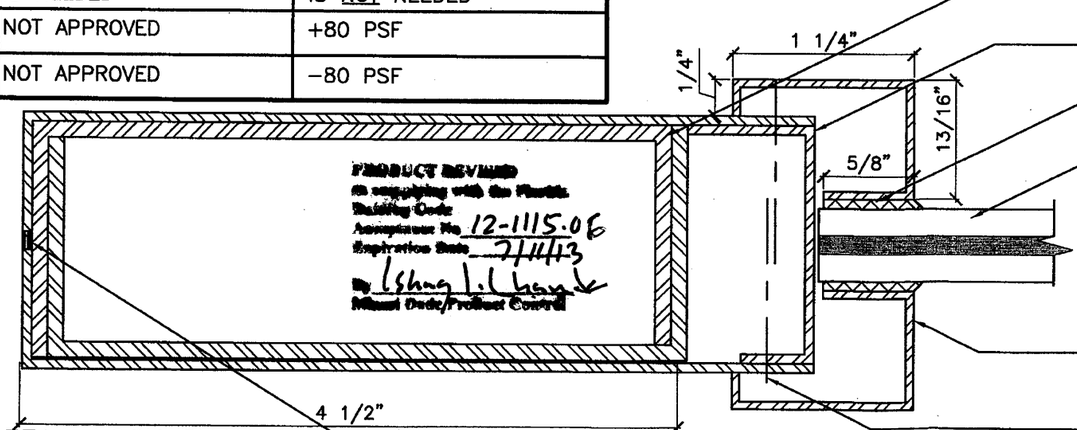

1 1/2" x 4 1/2" 12 GA. STEEL BOX CHANNEL WELDED @6" O.C. FULL LENGTH

16 GA. STEEL CHANNEL SPOT WELDED 4" O.C.

DOW CORNING #995 SEALANT (10)

7/16" LAMINATED GLASS – 3/16" H.S. GLASS LAMINATED TO BOTH SIDES OF .120 STORMGLASS LAMINATE BY OLD CASTLE GLASS IND. (9)

18 GA. STEEL WINDOW KIT

#6 SCREWS SET 12" O.C.

CONTINUOUSLY WELD EDGES

DETAIL LOCK CHANNEL
FULL SIZE

PRODUCT RENEWED
as complying with the Florida Building Code
Acceptance No. 07-1017.10
Expiration Date July 14, 2013
By Shang L. Chang
Miami-Dade Product Control Division

PRODUCT REVIEWED
as complying with the Florida Building Code
Acceptance No. 12-1115.06
Expiration Date 7/14/13
By Shang L. Chang
Miami-Dade Product Control

JUL 08 2008

DAVID M. SCHONACHER, P.E.
FLORIDA REG. # 63131
(NOT VALID WITHOUT SEAL)

16 GA. OUTSWINGING GLAZED COMMERCIAL STEEL DOOR

4506 QUALITY LANE
TAMPA, FLORIDA 33634
(813) 885-1693

Quality Engineered Products Co., Inc.

REVISIONS
1 6-28-2000
2 2-23-2005
3 7-8-2008

DRAWING NUMBER QQ2

HURRICANE TEST APPROVAL
QQ2

SHEET 7 OF 13

DATE 7-8-08

S:\Projects\2005\05-035 Quality Engineered Products\Other Disciplines\Quality Engineered Products\05-20-08\AVANTI QEP-SHEET7.dwg Plotted: Jul 08, 2008 - 4:16pm by kevinm

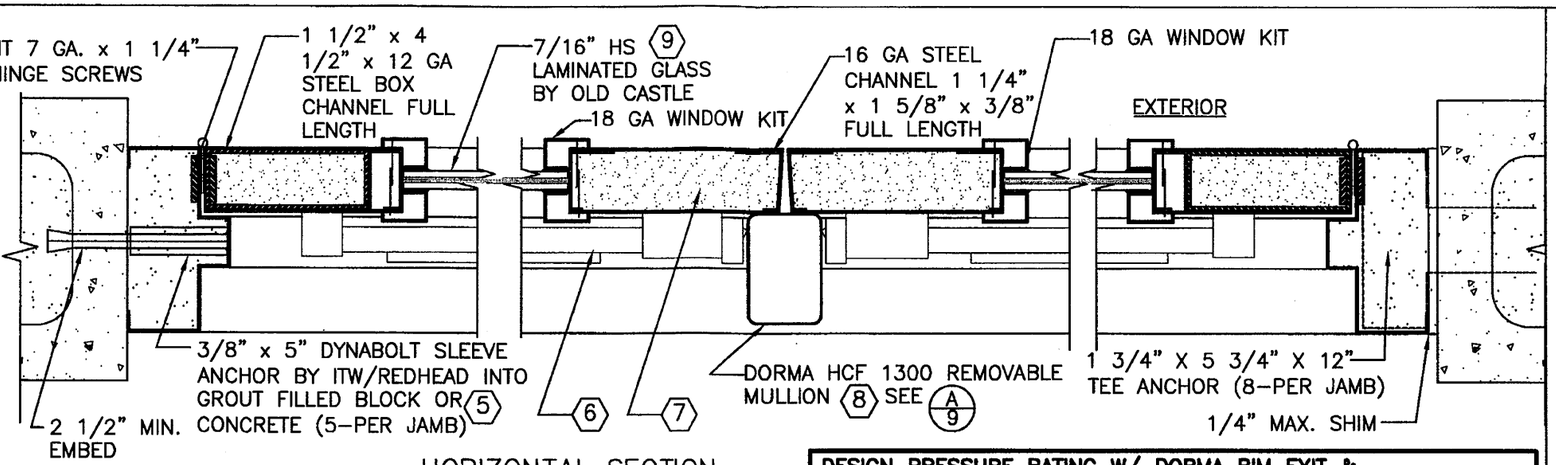

PRODUCT RENEWED
as complying with the Florida Building Code
Acceptance No 07-1017.10
Expiration Date July 4, 2013
By Ishas I. Chanda

HORIZONTAL SECTION (DOUBLE DOOR)
(L/8)
3" = 1'-0"

DESIGN PRESSURE RATING W/ DORMA RIM EXIT & DORMA 1300 REMOVABLE MULLIONS		
	WHERE AIR & WATER INFILTRATION REQUIREMENT IS NEEDED	WHERE AIR & WATER INFILTRATION REQUIREMENT IS NOT NEEDED
POSITIVE	NOT APPROVED	+80 PSF
NEGATIVE	NOT APPROVED	-80 PSF

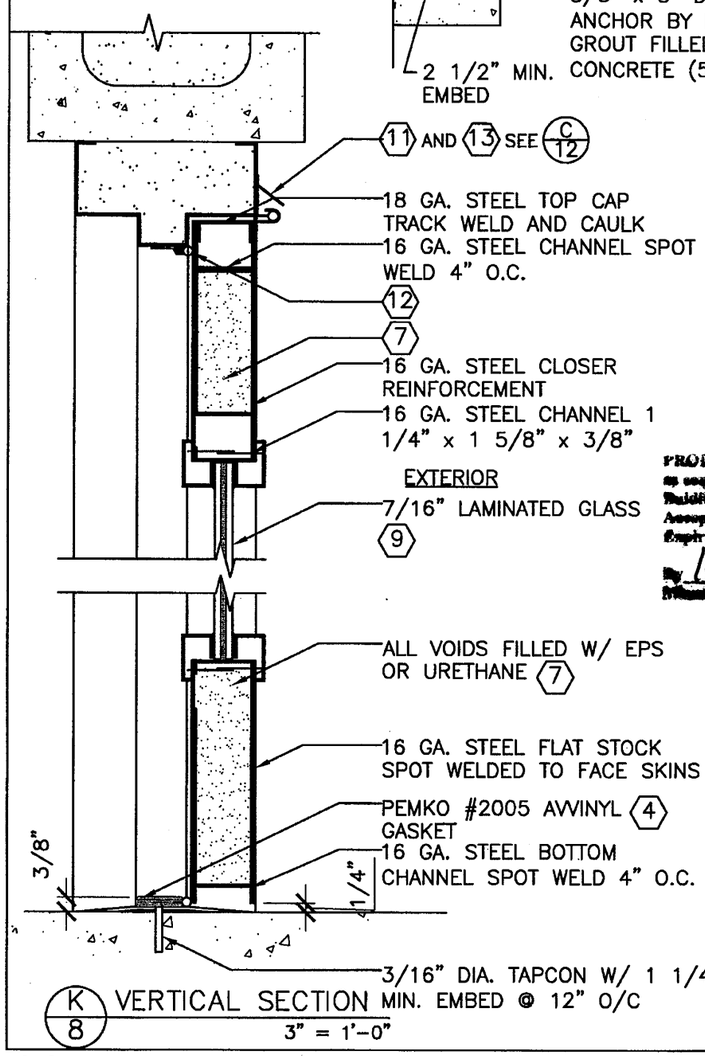

VERTICAL SECTION
(K/8)
3" = 1'-0"

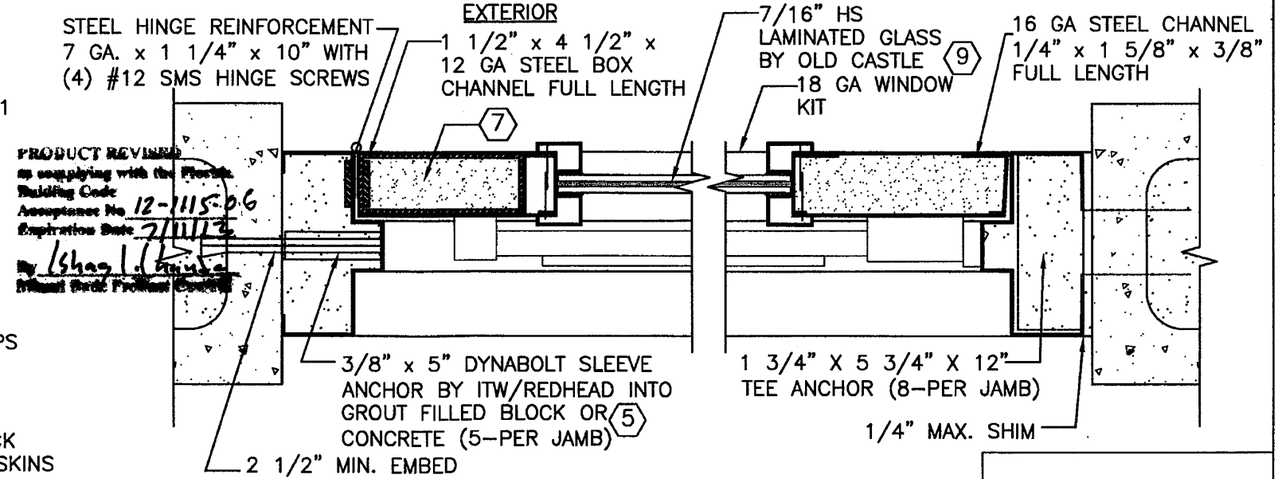

PRODUCT REVIEWED
as complying with the Florida Building Code
Acceptance No 12-1115.06
Expiration Date 7/11/13
By Ishas I. Chanda
Miami-Dade Product Control

HORIZONTAL SECTION (SINGLE DOOR)
(M/8)
3" = 1'-0"

GLAZED STEEL DOOR WITH "DORMA" RIM EXIT DEVICE & REMOVABLE MULLION

JUL 08 2008

DAVID M. SCHONACHER, P.E.
FLORIDA REG. # 63131
(NOT VALID WITHOUT SEAL)

16 GA. OUTSWINGING GLAZED COMMERCIAL STEEL DOOR

4506 QUALITY LANE
TAMPA, FLORIDA 33634
(813) 885-1693

Quality Engineered Products Co., Inc.

REVISIONS
1 6-28-2000
2 2-23-2005
3 7-8-2008

DRAWING NUMBER QQ2

HURRICANE TEST APPROVAL
QQ2

SHEET 8 OF 13

DATE 7-8-08

S:\Projects\2005\05-035 Quality Engineered Products\Other Disciplines\Quality Engineered Products\05-20-08\AVANTI QEP-SHEET8.dwg Plotted: Jul 08, 2008 - 4:17pm by kevinm

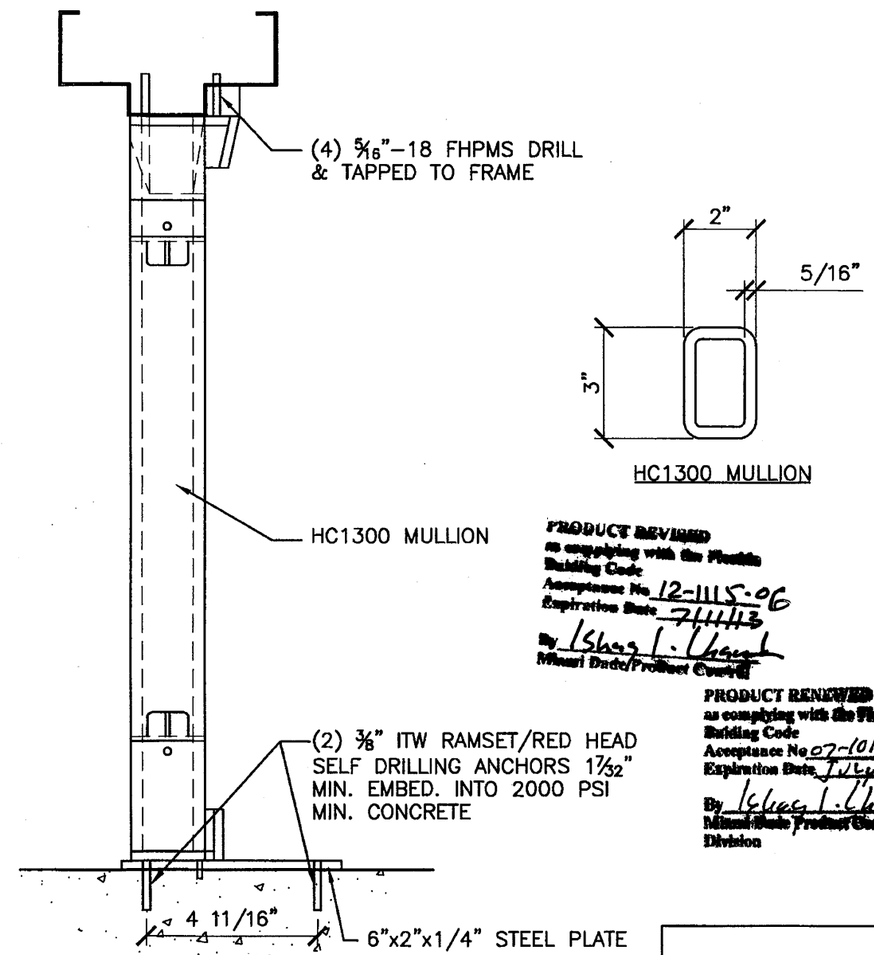

A/9 VERTICAL SECTION
3" = 1'-0"

PRODUCT REVISED
as complying with the Florida Building Code
Acceptance No. 12-1115-06
Expiration Date 7/11/13
By Ishag I. Chanak
Miami Dade/Product Control

PRODUCT RENEWED
as complying with the Florida Building Code
Acceptance No. 07-1017-10
Expiration Date July 14, 2013
By Ishag I. Chanak
Miami Dade Product Control Division

JUL 08 2008

DAVID M. SCHONACHER, P.E.
FLORIDA REG. # 63131
(NOT VALID WITHOUT SEAL)

DORMA HC-1300 REMOVABLE MULLION

16 GA. OUTSWINGING GLAZED COMMERCIAL STEEL DOOR

4506 QUALITY LANE
TAMPA, FLORIDA 33634
(813) 885-1693
Quality Engineered Products Co., Inc.

REVISIONS
1 6-28-2000
2 2-23-2005
3 7-8-2008

DRAWING NUMBER QQ2

HURRICANE TEST APPROVAL
QQ2

SHEET 9 OF 13

DATE 7-8-08

S:\Projects\2005\05-035 Quality Engineered Products\Other Disciplines\Quality Engineered Products\05-20-08\AVANTI QEP-SHEET8.dwg Plotted: Jul 08, 2008 - 4:18pm by kevinm

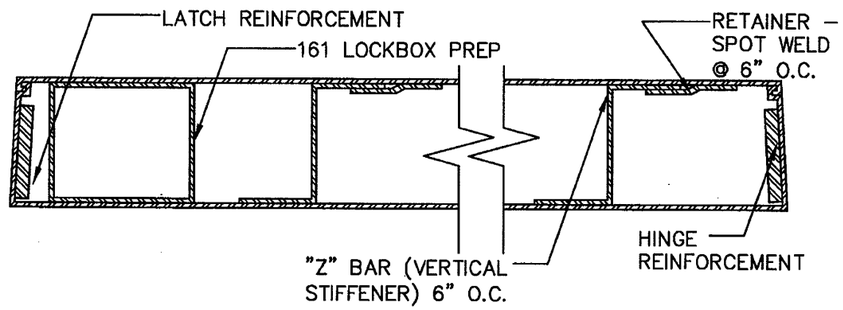

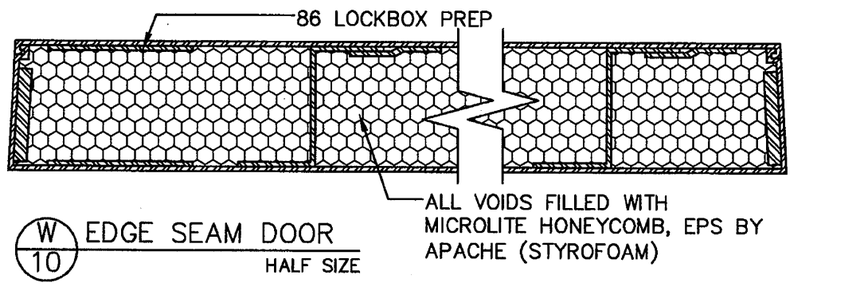

W/10 EDGE SEAM DOOR
HALF SIZE

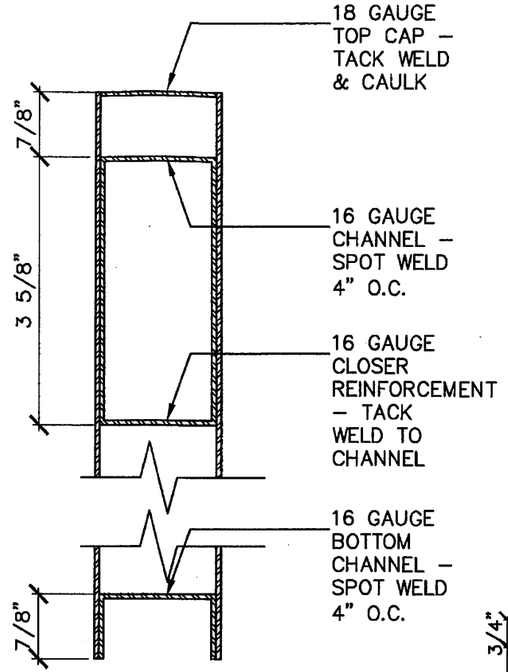

Y/10 VERTICAL DOOR SECTION
HALF SIZE

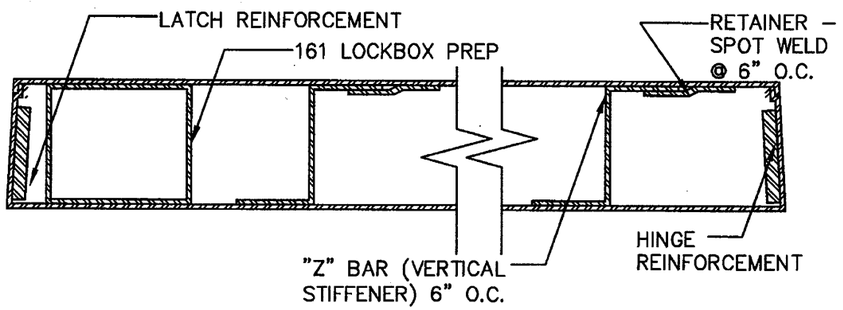

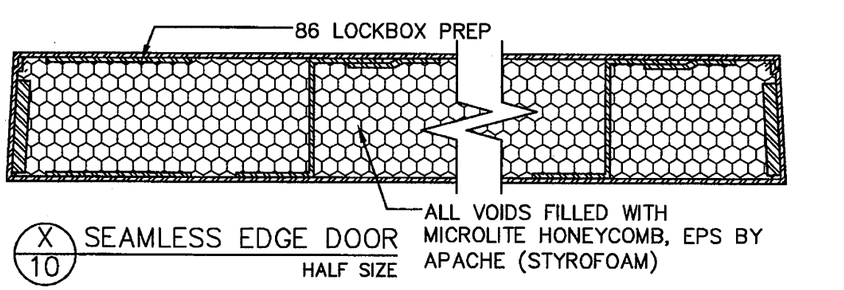

X/10 SEAMLESS EDGE DOOR
HALF SIZE

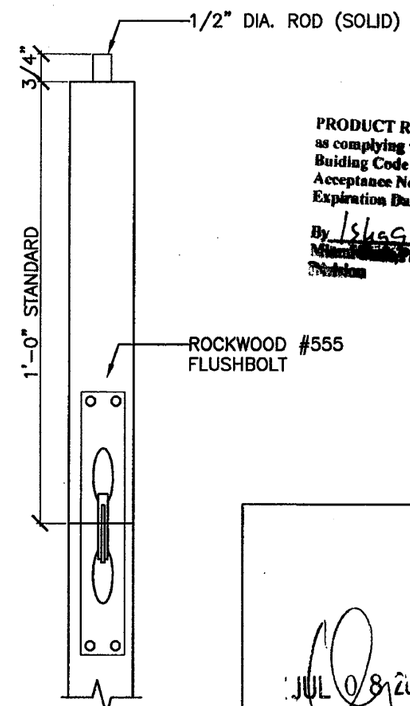

Z/10 DETAIL
3" = 1'-0"

PRODUCT RENEWED
as complying with the Florida Building Code
Acceptance No. 07-1017.10
Expiration Date July 11, 2013
By Ishaq I. Chanda
Miami-Dade Product Control Section

PRODUCT REVISED
as complying with the Florida Building Code
Acceptance No. 12-1115.06
Expiration Date 7/11/13
By Ishaq I. Chanda
Miami Dade Product Control

JUL 08 2008
DAVID M. SCHONACHER, P.E.
FLORIDA REG. # 63131
(NOT VALID WITHOUT SEAL)

DOOR PANEL CONSTRUCTION DETAILS

16 GA. OUTSWINGING GLAZED COMMERCIAL STEEL DOOR

4506 QUALITY LANE
TAMPA, FLORIDA 33634
(813) 885-1693

Quality Engineered Products Co., Inc.

REVISIONS
1 6-28-2000
2 2-23-2005
3 7-8-2008

DRAWING NUMBER QQ2

HURRICANE TEST APPROVAL
QQ2

SHEET 10 OF 13

DATE 7-8-08

S:\Projects\2005\05-035 Quality Engineered Products\Other Disciplines\Quality Engineered Products\05-20-08\AVANTI QEP-SHEET10.dwg Plotted: Jul 08, 2008 - 4:18pm by kevinm

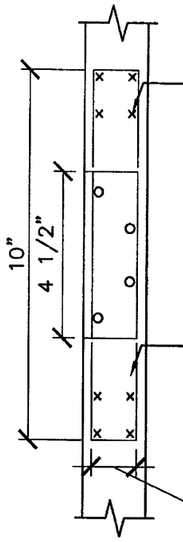

E/11 DETAIL HINGE REINFORCEMENT
3" = 1'-0"

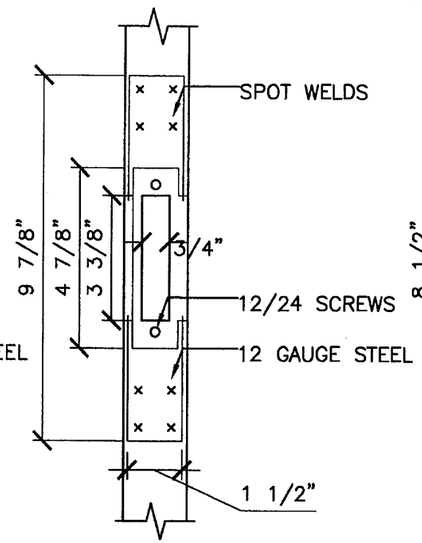

F/11 DETAIL STRIKE REINFORCEMENT
3" = 1'-0"

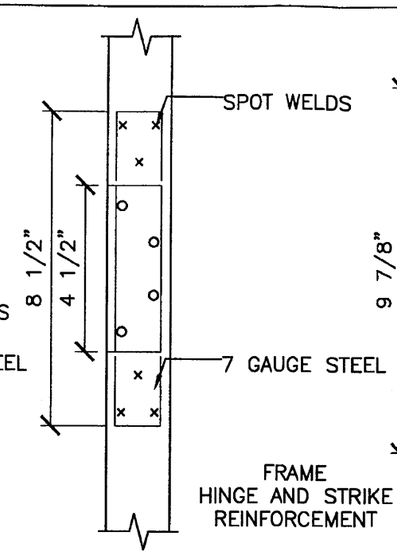

N/11 DETAIL
3" = 1'-0"

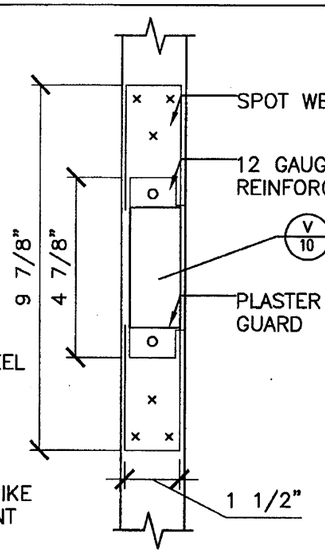

P/11 DETAIL
3" = 1'-0"

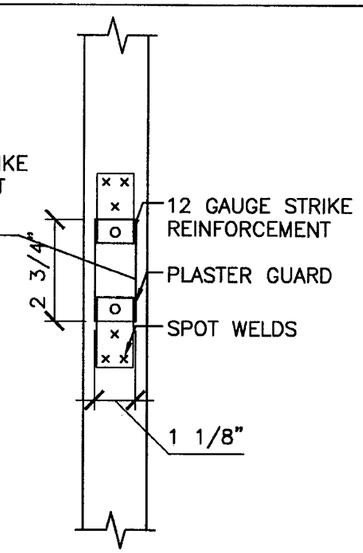

R/11 DETAIL DEADBOLT REINFORCEMENT
3" = 1'-0"

DOOR & FRAME REINFORCEMENTS

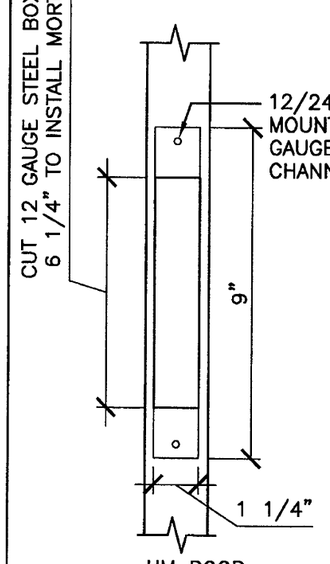

G/11 DETAIL LOCK REINFORCEMENT
3" = 1'-0"

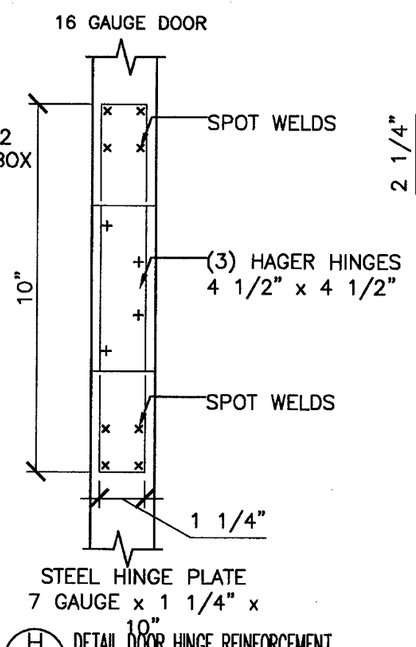

H/11 DETAIL DOOR HINGE REINFORCEMENT
3" = 1'-0"

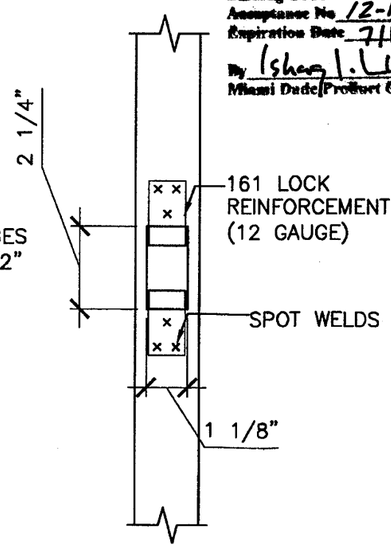

S/11 DETAIL DOOR LOCK REINFORCEMENT
3" = 1'-0"

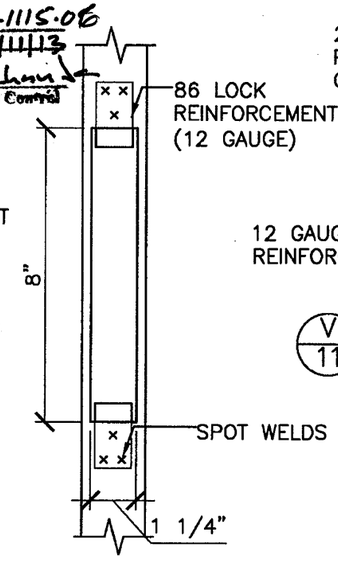

T/11 DETAIL DOOR LOCK REINFORCEMENT
3" = 1'-0"

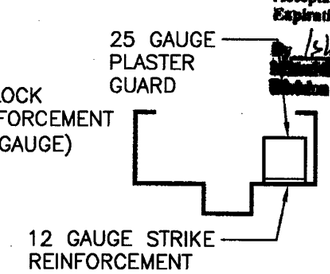

V/11 PLASTER GUARD
3" = 1'-0"

PRODUCT REVIEWED
as complying with the Florida
Building Code
Acceptance No 12-1115.06
Expiration Date 7/11/13
By Ishaq I. Khan Jr
Miami Dade Product Control

PRODUCT RENEWED
as complying with the Florida
Building Code
Acceptance No 07-1017.10
Expiration Date July 11, 2013
By Ishaq I. Khan Jr
Miami Dade Product Control Section

JUL 08 2008

DAVID M. SCHONACHER, P.E.
FLORIDA REG. # 63131
(NOT VALID WITHOUT SEAL)

16 GA. OUTSWINGING GLAZED COMMERCIAL STEEL DOOR

4506 QUALITY LANE
TAMPA, FLORIDA 33634
(813) 885-1693

Quality Engineered Products Co., Inc.

REVISIONS
1 6-28-2000
2 2-23-2005
3 7-8-2008

DRAWING NUMBER QQ2

HURRICANE TEST APPROVAL
QQ2

SHEET 11 OF 13

DATE 7-8-08

S:\Projects\2005\05-035 Quality Engineered Products\Other Disciplines\Quality Engineered Products\05-20-08\AVANTI QEP-SHEET11.dwg Plotted: Jul 08, 2008 - 4:19pm by kevinm

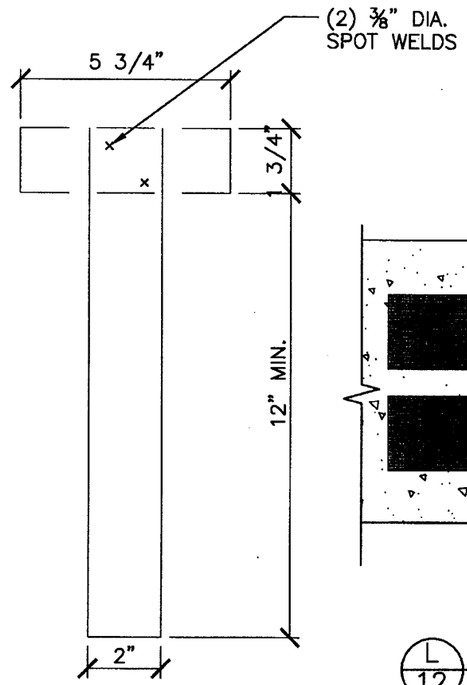

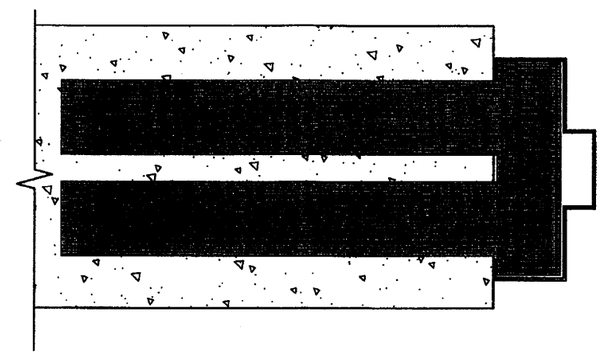

L/12 DETAIL NEW MASONRY ANCHORING
3" = 1'-0"

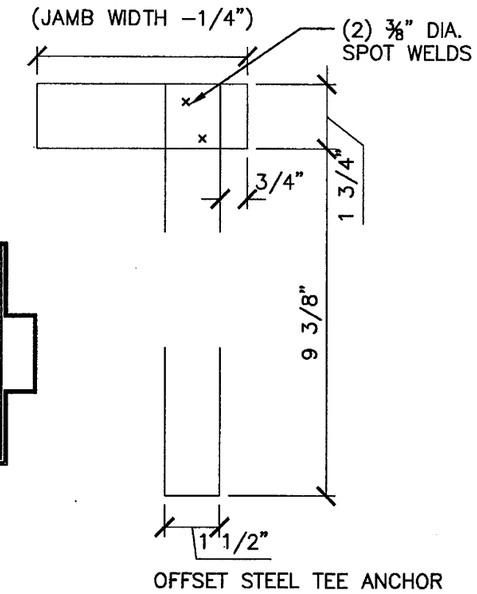

OFFSET STEEL TEE ANCHOR

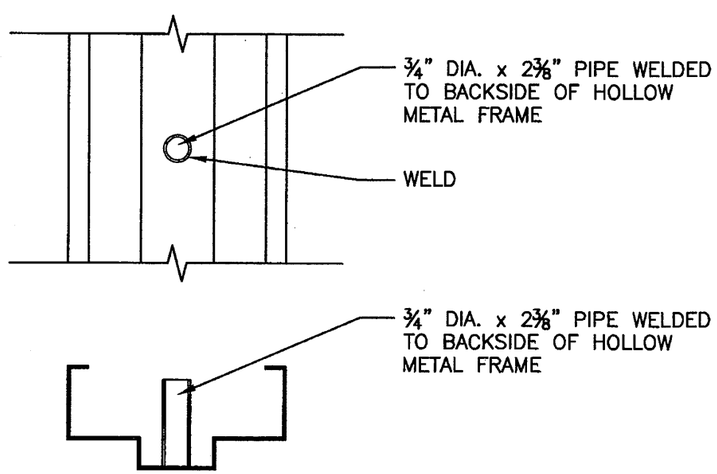

M/12 PIPE SLEEVE DETAIL
3" = 1'-0"

'T' ANCHOR DETAILS

(SEE APPLICABLE ELEVATION FOR
NUMBER OF 'T' ANCHORS REQUIRED)

THICKNESS = 0.059" (16 GA.)
$Fy_{MIN.}$ = 30 KSI

PRODUCT RENEWED
as complying with the Florida
Building Code
Acceptance No 07-1017.10
Expiration Date July 11, 2013
By Shaq I. Chanda
Miami-Dade Product Control
Division

PRODUCT REVISED
as complying with the Florida
Building Code
Acceptance No 12-1115.06
Expiration Date 7/11/13
By Shaq I. Chanda
Miami-Dade Product Control

JUL 08 2008

DAVID M. SCHONACHER, P.E.
FLORIDA REG. # 63131
(NOT VALID WITHOUT SEAL)

16 GA. OUTSWINGING GLAZED COMMERCIAL STEEL DOOR

4506 QUALITY LANE
TAMPA, FLORIDA 33634
(813) 885-1693

Quality Engineered Products Co., Inc.

REVISIONS
1 6-28-2000
2 2-23-2005
3 7-8-2008

DRAWING NUMBER QQ2

HURRICANE TEST APPROVAL
QQ2

SHEET 12 OF 13

DATE 7-8-08

PRODUCT REVIEWED
as complying with the Florida
Building Code
Acceptance No. 12-1115.06
Expiration Date 7/11/13
By Ishaq I. Chand
Miami Dade Product Control

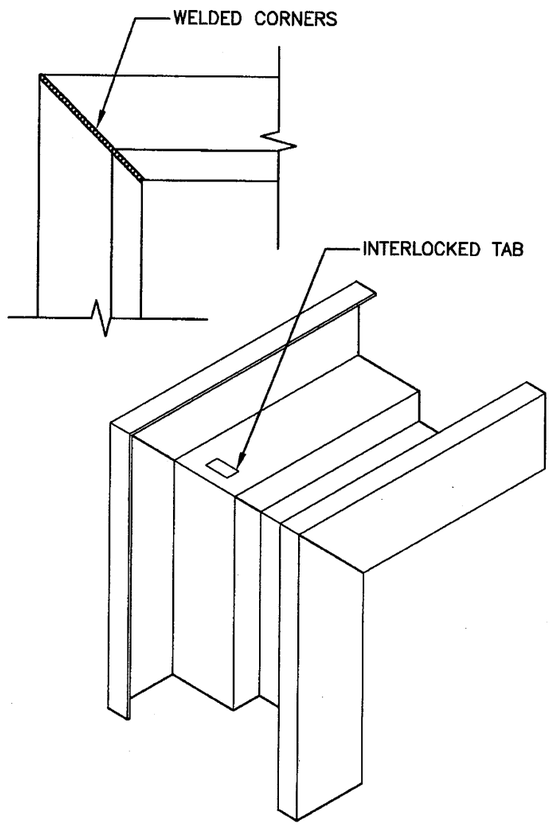

TYPICAL CORNER DETAIL
3" = 1'-0"

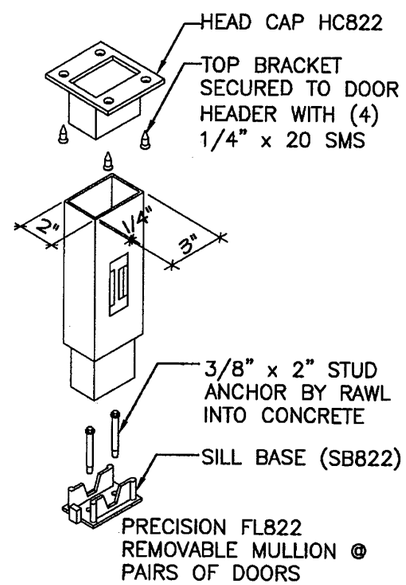

Z/13 DETAIL REMOVABLE MULLION
1 1/2" = 1'-0"

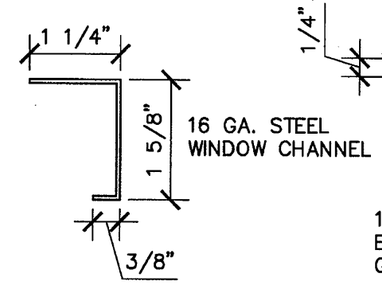

DETAIL
HALF SIZE

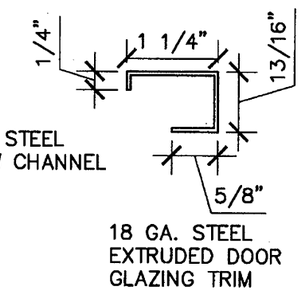

DETAIL 18 GA. WINDOW KIT
HALF SIZE

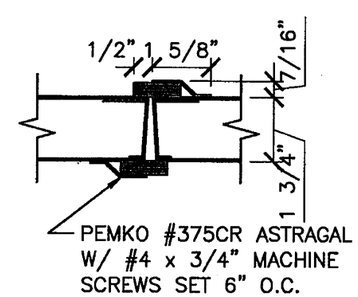

E/13 DETAIL ASTRAGAL
3" = 1'-0"

PRODUCT RENEWED
as complying with the Florida
Buiding Code
Acceptance No. 02-1017.10
Expiration Date July 11, 2013
By Ishaq I. Chand
Miami-Dade Product Control
Division

JUL 08 2008

DAVID M. SCHONACHER, P.E.
FLORIDA REG. # 63131
(NOT VALID WITHOUT SEAL)

COMMON DETAILS

16 GA. OUTSWINGING GLAZED COMMERCIAL STEEL DOOR

4506 QUALITY LANE
TAMPA, FLORIDA 33634
(813) 885-1693

Quality Engineered Products Co., Inc.

REVISIONS
1 6-28-2000
2 2-23-2005
3 7-8-2008

DRAWING NUMBER QQ2

HURRICANE TEST APPROVAL
QQ2

SHEET 13 OF 13

DATE 7-8-08