MIAMI-DADE COUNTY
PRODUCT CONTROL SECTION
11805 SW 26 Street, Room 208
Miami, Florida 33175-2474
T (786) 315-2590 F (786) 315-2599
www.miamidade.gov/economy

DEPARTMENT OF REGULATORY AND ECONOMIC RESOURCES (RER)
BOARD AND CODE ADMINISTRATION DIVISION

NOTICE OF ACCEPTANCE (NOA)

Quality Engineered Products Co., Inc.
4506 Quality Lane
Tampa, FL 33634

SCOPE:

This NOA is being issued under the applicable rules and regulations governing the use of construction materials. The documentation submitted has been reviewed and accepted by Miami-Dade County RER -Product Control Section to be used in Miami Dade County and other areas where allowed by the Authority Having Jurisdiction (AHJ).
This NOA shall not be valid after the expiration date stated below. The Miami-Dade County Product Control Section (In Miami Dade County) and/or the AHJ (in areas other than Miami Dade County) reserve the right to have this product or material tested for quality assurance purposes. If this product or material fails to perform in the accepted manner, the manufacturer will incur the expense of such testing and the AHJ may immediately revoke, modify, or suspend the use of such product or material within their jurisdiction. RER reserves the right to revoke this acceptance, if it is determined by Miami-Dade County Product Control Section that this product or material fails to meet the requirements of the applicable building code.

This product is approved as described herein, and has been designed to comply with the Florida Building Code, including the High Velocity Hurricane Zone.

DESCRIPTION: Series "HMS" Glazed 16 ga Steel Storefront System-Impact

APPROVAL DOCUMENT: Drawing No. **QEP004**, titled "Storefront System(LMI)", sheets 1 through 13 of 13, prepared by manufacturer, dated 06/10/09 and last revised on 10/07/09, signed and sealed by David M. Schonacher, P. E., bearing the Miami-Dade County Product Control Renewal stamp with the Notice of Acceptance number and expiration date by the Miami-Dade County Product Control Section.

MISSILE IMPACT RATING: Large and Small Missile Impact Resistant

Limitations:

1. Louvered Transom, as part of Storefront, is **not** approved where Air & Water infiltration is needed.
2. See approved installation substrates in sheet 8 thru 12. Item # 5 (Welded pipe Sleeve) is required with ½" Sleeve anchors (thru storefront frames) into Concrete or grout filled CMU or block substrates.
3. See Precision Removable mullion installation details in sheet 10.
4. Approved EPS core by Dynaplast (Former Apache) having current NOA.

LABELING: Each unit shall bear a permanent label with the manufacturer's name or logo, city, state and series and following statement: "Miami-Dade County Product Control Approved", noted herein.

RENEWAL of this NOA shall be considered after a renewal application has been filed and there has been no change in the applicable building code negatively affecting the performance of this product.

TERMINATION of this NOA will occur after the expiration date or if there has been a revision or change in the materials, use, and/or manufacture of the product or process. Misuse of this NOA as an endorsement of any product, for sales, advertising or any other purposes shall automatically terminate this NOA. Failure to comply with any section of this NOA shall be cause for termination and removal of NOA.

ADVERTISEMENT: The NOA number preceded by the words Miami-Dade County, Florida, and followed by the expiration date may be displayed in advertising literature. If any portion of the NOA is displayed, then it shall be done in its entirety.

INSPECTION: A copy of this entire NOA shall be provided to the user by the manufacturer or its distributors and shall be available for inspection at the job site at the request of the Building Official.

This NOA **revises NOA # 09-0617.03** and consists of this page 1 and evidence pages E-1, as well as approval document mentioned above.

The submitted documentation was reviewed by **Ishaq I. Chanda, P.E.**

MIAMI-DADE COUNTY APPROVED
11/20/13

NOTICE OF ACCEPTANCE: EVIDENCE SUBMITTED

A. DRAWINGS

1. Manufacturer's die drawings and sections (Submitted under file # **09-0617.03**)
2. Drawing No. **QEP004**, titled "Storefront System(LMI)", sheets 1 through 13 of 13, prepared by manufacturer, dated 06/10/09 and last revised on 10/07/09, signed and sealed by David M. Schonacher, Jr., P. E.

B. TESTS (Submitted under file # **09-0617.03 / #04-0218.01)**

1. Test reports on 1) Air Infiltration Test, per FBC TAS 202-94
   2) Uniform Static Air Pressure Test, Loading per FBC TAS 202.
   3) Water Resistance Test per FBC TAS 202-94 (Not Performed).
   4) Large Missile Impact Test per FBC, TAS 201-94
   5) Cyclic Wind Pressure Loading per FBC, TAS 203-94
   6) Forced Entry Test, per FBC and TAS 202-94

Along with marked-up drawings and installation diagram of glazed steel storefront, prepared by Certified Testing Laboratories Inc., Test Reports No(s). **CTLA 976W-1, 976W-2, 1976W-3 and 1976W-4,** dated December 08,2003, signed & sealed by Ramesh Patel, P. E

Note: This test report has been revised by addendum letter dated May 06, 2004 and 09-15-09, issued by Certified Testing Lab. Inc, signed & sealed by Ramesh Patel, P. E.

C. CALCULATIONS

1. Anchor verification calculations, dated 10-07-09, prepared, signed and sealed by David M. Schonacher, Jr., P.E. (Submitted under file # **09-0617.03**).

D. QUALITY ASSURANCE

1 Miami Dade Department of Regulatory and Economic Resources (RER)

E. MATERIAL CERTIFICATIONS

1. Tensile test report prepared by Certified Testing Laboratories Inc., Test Report No. **CTL 1023J (CTL976W-1, 2, 3 & 4),** tested per ASTM E-A370-97, dated December 11,2003, signed and sealed by Ramesh Patel, P. E. **(Submitted under file # 09-0617.03)**
2. Notice of Acceptance No. **11-0926.07** issued to Dyplastic Products, LLC (former Apache Products Co) for "EPS-Expanded Polystyrene Insulation", expiring on 01/11/2017.
3. Notice of Acceptance No. **12-0130.02** issued to Cytec Industry, Inc. (former Surface specialties Tech.) for "Uvekol-S Laminated Glass interlayer", expiring on 02/08/2014.

F. STATEMENTS

1. Statement letter of conformance to FBC 2010 and "no financial interest", dated 01/15/13, signed and sealed by David M. Schonacher Jr., P. E.
2. Statesman letter of conformance to FBC 2007 and "No financial interest", dated August 27, 2009, signed and sealed by David M. Schonacher Jr. , P. E. (Submitted under file # **09-0617.03)**
3. Statement letter of compliance, as a part of the above referenced test reports.

G. OTHER

1. This **revises NOA # 09-0617.03**, expiring August 24, 2014.
2. Test Proposal by Q. E. P. dated September 19, 2002, approved by BCCO

Ishaq I. Chanda

Ishaq I. Chanda, P.E.
Product Control Examiner
NOA No. 12-1115.11
Expiration Date: August 27, 2014
Approval Date: February 07, 2013

QUALITY ENGINEERED PRODUCTS

STOREFRONT SYSTEM - IMPACT

INSTALLATION NOTES:

1. ONE (1) INSTALLATION ANCHOR IS REQUIRED AT EACH ANCHOR LOCATION SHOWN.
2. THE NUMBER OF INSTALLATION ANCHORS DEPICTED IS THE MINIMUM NUMBER OF ANCHORS TO BE USED FOR PRODUCT INSTALLATION.
3. SHIM AS REQUIRED AT EACH INSTALLATION ANCHOR WITH LOAD BEARING SHIM(S). MAXIMUM ALLOWABLE SHIM STACK TO BE 1/4 INCH. SHIM WHERE SPACE OF 1/16 INCH OR GREATER OCCURS. SHIM(S) SHALL BE CONSTRUCTED OF HIGH DENSITY PLASTIC OR BETTER.
4. MINIMUM EMBEDMENT AND EDGE DISTANCE EXCLUDE WALL FINISHES, INCLUDING BUT NOT LIMITED TO STUCCO, FOAM, BRICK VENEER, AND SIDING.
5. INSTALLATION ANCHORS AND ASSOCIATED HARDWARE MUST BE MADE OF CORROSION RESISTANT MATERIAL OR HAVE A CORROSION RESISTANT COATING. N/A 1/28/13
6. FOR ~~HOLLOW BLOCK~~ AND GROUT FILLED BLOCK, DO NOT INSTALL INSTALLATION ANCHORS INTO MORTAR JOINTS. EDGE DISTANCE IS MEASURED FROM FREE EDGE OF BLOCK OR EDGE OF MORTAR JOINT INTO FACE SHELL OF BLOCK.
7. INSTALLATION ANCHORS SHALL BE INSTALLED IN ACCORDANCE WITH ANCHOR MANUFACTURER'S INSTALLATION INSTRUCTIONS, AND ANCHORS SHALL NOT BE USED IN SUBSTRATES WITH STRENGTHS LESS THAN THE MINIMUM STRENGTH SPECIFIED BY THE ANCHOR MANUFACTURER.
8. INSTALLATION ANCHOR CAPACITIES FOR PRODUCTS HEREIN ARE BASED ON SUBSTRATE MATERIALS WITH THE FOLLOWING PROPERTIES:
   A. CONCRETE -MINIMUM COMPRESSIVE STRENGTH OF 3000 PSI.
   B. MASONRY - STRENGTH CONFORMANCE TO ASTM C-90, GRADE N, TYPE 1 (OR GREATER).

GENERAL NOTES:

1. THE PRODUCT SHOWN HEREIN IS DESIGNED AND MANUFACTURED TO COMPLY WITH THE 2007 FLORIDA BUILDING CODE (FBC), INCLUDING HVHZ AND HAS BEEN EVALUATED ACCORDING TO THE FOLLOWING:
   - TAS 201-94
   - TAS 202-94
   - TAS 203-94
2. ADEQUACY OF THE EXISTING STRUCTURAL CONCRETE/MASONRY AND ~~2X FRAMING~~ AS A MAIN WIND FORCE RESISTING SYSTEM CAPABLE OF WITHSTANDING AND TRANSFERRING APPLIED PRODUCT LOADS TO THE FOUNDATION IS THE RESPONSIBILITY OF THE ENGINEER OR ARCHITECT OF RECORD FOR THE PROJECT OF INSTALLATION. N/A 1/28/13
3. THE INSTALLATION DETAILS DESCRIBED HEREIN ARE GENERIC AND MAY NOT REFLECT ACTUAL CONDITIONS FOR A SPECIFIC SITE. IF SITE CONDITIONS CAUSE INSTALLATION TO DEVIATE FROM THE REQUIREMENTS DETAILED HEREIN, A LICENSED ENGINEER OR ARCHITECT SHALL PREPARE SITE SPECIFIC DOCUMENTS FOR USE WITH THIS DOCUMENT.
4. THIS PRODUCT IS LARGE AND SMALL MISSILE IMPACT RESISTANT APPROVED IMPACT PROTECTIVE SYSTEM **IS NOT REQUIRED** ON THIS PRODUCT IN AREAS REQUIRING IMPACT RESISTANCE.
5. DOOR FRAME MATERIAL: GALVANIZED STEEL

PRODUCT REVIEWED as complying with the Florida Building Code Acceptance No. 12-1115.11 Expiration Date: Aug 27, 2014 By: Ishaq I. Chanda Miami Dade Product Control Division

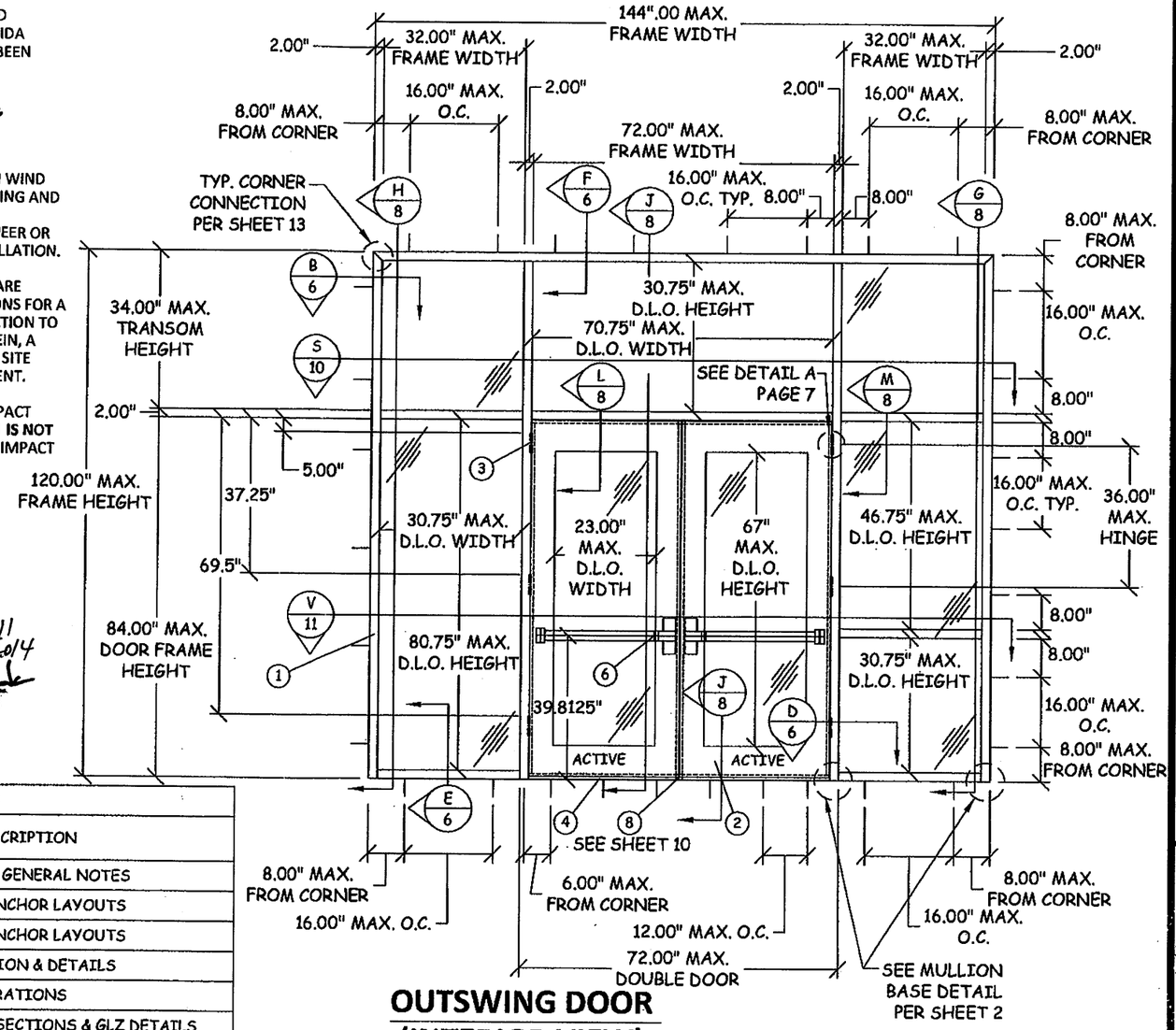

OUTSWING DOOR (INTERIOR VIEW)

TABLE OF CONTENTS		
SHEET	REVISION	SHEET DESCRIPTION
1	-	INSTALLATION & GENERAL NOTES
2	-	ELEVATIONS & ANCHOR LAYOUTS
3	-	ELEVATIONS & ANCHOR LAYOUTS
4	-	LOUVER ELEVATION & DETAILS
5	-	CONFIGURATIONS
6	-	VERTICAL & HORIZONTAL SECTIONS & GLZ DETAILS
7	-	DOOR & FRAME REINFORCEMENTS
8	-	VERTICAL SECTIONS
9	-	VERTICAL SECTIONS
10	-	HORIZONTAL SECTIONS & DETAILS
11	-	HORIZONTAL SECTIODS
12	-	HORIZONTAL SECTIONS, BILL OF MATERIALS & DETAILS
13	-	ISO-METRIC VIEWS

DESIGN PRESSURE RATING (STOREFRONT SYSTEM)			
	WHERE AIR & WATER INFILTRATION REQUIREMENTS IS NEEDED	WHERE AIR & WATER INFILTRATION REQUIREMENTS IS NOT NEEDED	MISSILE IMPACT RATING
POSITIVE	+60 PSF	+60 PSF	LARGE & SMALL MISSILE IMPACT RATED
NEGATIVE	-60 PSF	-60 PSF	LARGE & SMALL MISSILE IMPACT RATED

PRODUCT RENEWED as complying with the Florida Building Code Acceptance No. 09-0617.03 Expiration Date AUG. 27, 2014 By: Ishaq I. Chanda Miami Dade Product Control Division

Quality Engineered Products Co., Inc.

PREPARED FOR:
QUALITY ENGINEERED PRODUCTS
4506 QUALITY LN.
TAMPA, FL 33634
PH: 813.885.1693 FX: 813.884.2673

TITLE: STOREFRONT SYSTEM (LMI) INSTALLATION & GENERAL NOTES

REVISIONS

NO.	DESCRIPTION	BY	DATE

OCT 07 2009

DAVID M. SCHONACHER, P.E. FLORIDA REG. # 63131 (NOT VALID WITHOUT SEAL)

DATE: 06.10.09 | DWN BY: GRN | CHK BY: HN | SCALE: NTS

DWG #: QEP004

SHEET: 1 OF 13

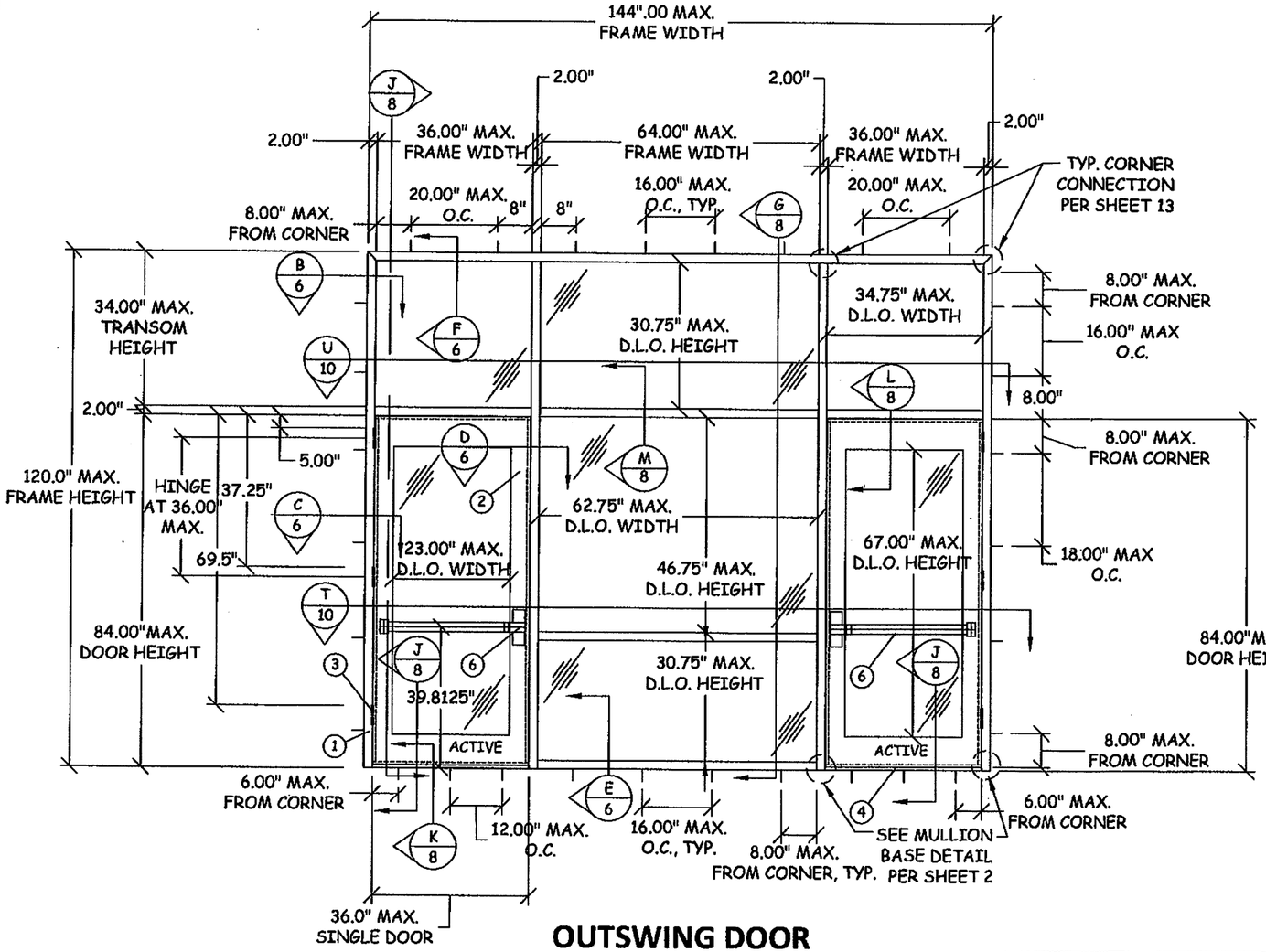

OUTSWING DOOR (INTERIOR VIEW)

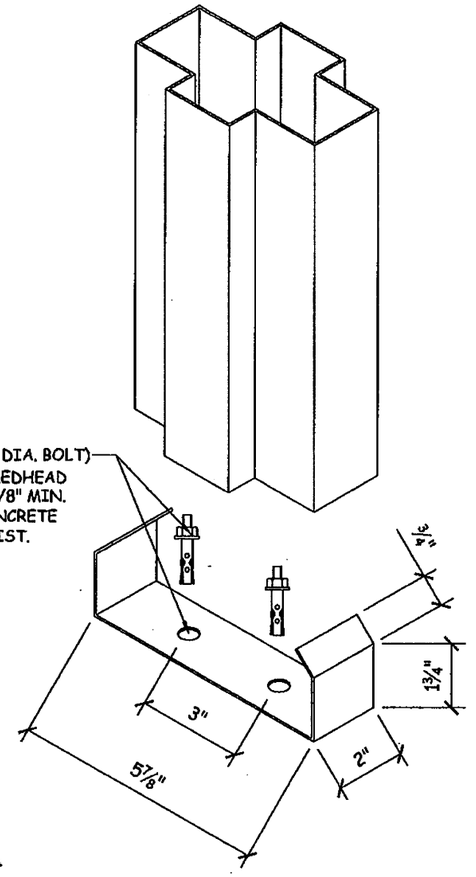

MULLION BASE DETAIL

PRODUCT REVISED
as complying with the Florida
Building Code
Acceptance No. 12-1115.11
Expiration Date 9/27/14
By Ishaq I. Chanda
Miami Dade Product Control

DESIGN PRESSURE RATING (STOREFRONT SYSTEM)			
	WHERE AIR & WATER INFILTRATION REQUIREMENTS IS NEEDED	WHERE AIR & WATER INFILTRATION REQUIREMENTS IS NOT NEEDED	MISSILE IMPACT RATING
POSITIVE	+60 PSF	+60 PSF	LARGE & SMALL MISSILE IMPACT RATED
NEGATIVE	-60 PSF	-60 PSF	LARGE & SMALL MISSILE IMPACT RATED

PRODUCT RENEWED
as complying with the Florida
Building Code
Acceptance No. 09-0617.03
Expiration Date AUG. 27, 2014
By Ishaq I. Chanda
Miami Dade Product Control
Division

Quality Engineered Products Co., Inc.

TITLE: STOREFRONT SYSTEM (LMI) ELEVATIONS & ANCHOR LAYOUTS

PREPARED FOR:

QUALITY ENGINEERED PRODUCTS
4506 QUALITY LN.
TAMPA, FL 33634
PH: 813.885.1693 FX: 813.884.2673

REVISIONS

NO.	DESCRIPTION	BY	DATE

OCT 07 2009

DAVID M. SCHNACHER, P.E.
FLORIDA REG. # 63151
(NOT VALID WITHOUT SEAL)

DATE: 06.10.09 | DWN BY: GRN | CHK BY: HN | SCALE: NTS

DWG #: QEP004

SHEET: 2 OF 13

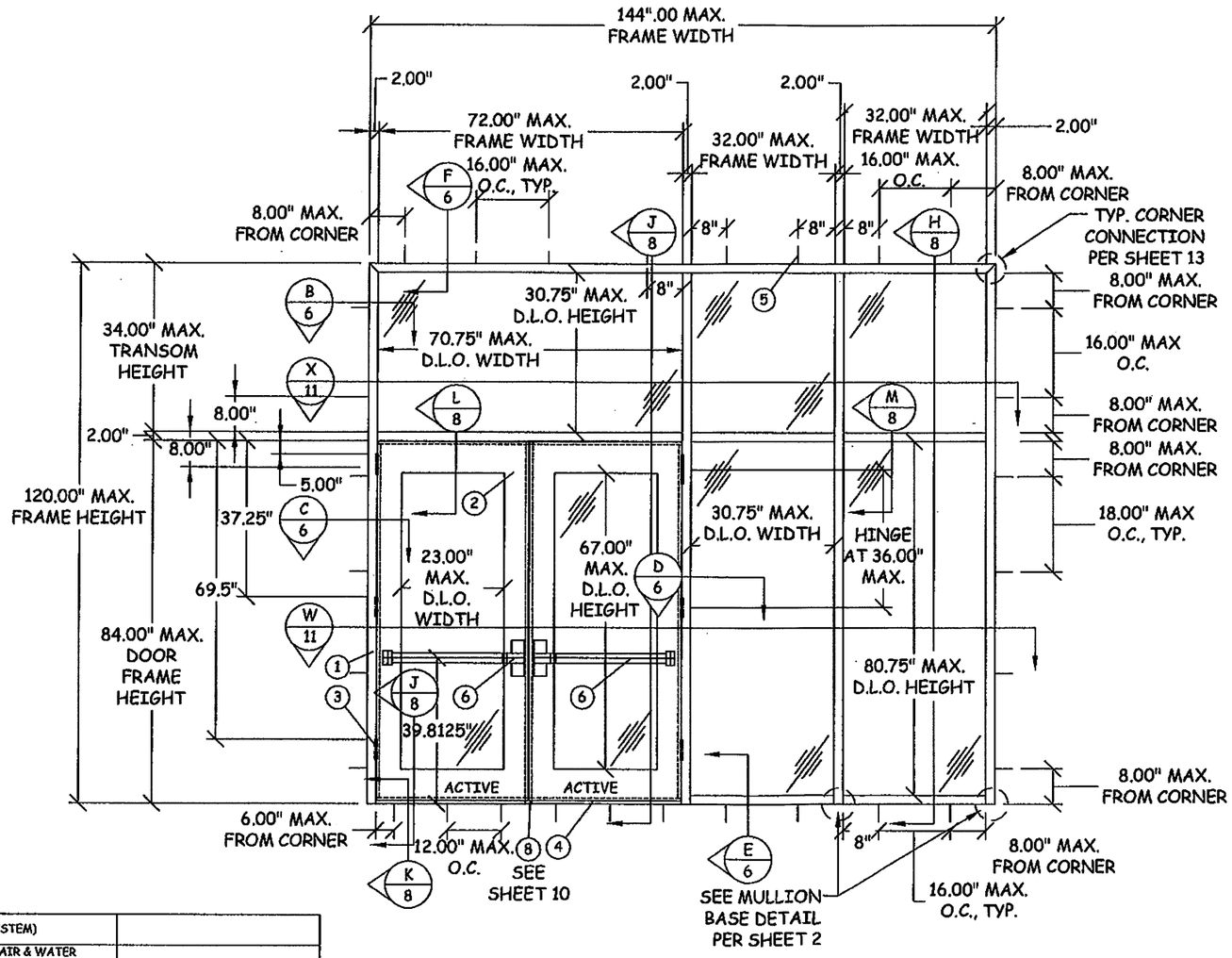

OUTSWING DOOR
(INTERIOR VIEW)

DESIGN PRESSURE RATING (STOREFRONT SYSTEM)			
	WHERE AIR & WATER INFILTRATION REQUIREMENTS IS NEEDED	WHERE AIR & WATER INFILTRATION REQUIREMENTS IS NOT NEEDED	MISSILE IMPACT RATING
POSITIVE	+60 PSF	+60 PSF	LARGE & SMALL MISSILE IMPACT RATED
NEGATIVE	-60 PSF	-60 PSF	LARGE & SMALL MISSILE IMPACT RATED

PRODUCT REVISED
as complying with the Florida
Building Code
Acceptance No. 12-1115.11
Expiration Date 3/27/14
By Ishaq I. Chanda
Miami Dade Product Control

PRODUCT RENEWED
as complying with the Florida
Building Code
Acceptance No. 09-0617.03
Expiration Date 06.27.2014
By Ishaq I. Chanda
Miami Dade Product Control
Division

Quality Engineered Products Co., Inc.

TITLE: STOREFRONT SYSTEM (LMI) ELEVATIONS & ANCHOR LAYOUTS

PREPARED FOR:

QUALITY ENGINEERED PRODUCTS
4506 QUALITY LN.
TAMPA, FL 33634
PH: 813.885.1693 FX: 813.884.2673

REVISIONS

NO.	DESCRIPTION	BY	DATE

OCT 07 2009

DAVID M. SCHONACHER, P.E.
FLORIDA REG. # 63131
(NOT VALID WITHOUT SEAL)

DATE: 06.10.09
DWN BY: GRN
CHK BY: HN
SCALE: NTS

DWG #: QEP004

SHEET: 3 OF 13

DESIGN PRESSURE RATING (STOREFRONT W/ LOUVER TRANSOM)			
	WHERE AIR & WATER INFILTRATION REQUIREMENTS IS NEEDED	WHERE AIR & WATER INFILTRATION REQUIREMENTS IS NOT NEEDED	MISSILE IMPACT RATING
POSITIVE	NOT APPROVED	+60 PSF	LARGE & SMALL MISSILE IMPACT RATED
NEGATIVE	NOT APPROVED	-60 PSF	LARGE & SMALL MISSILE IMPACT RATED

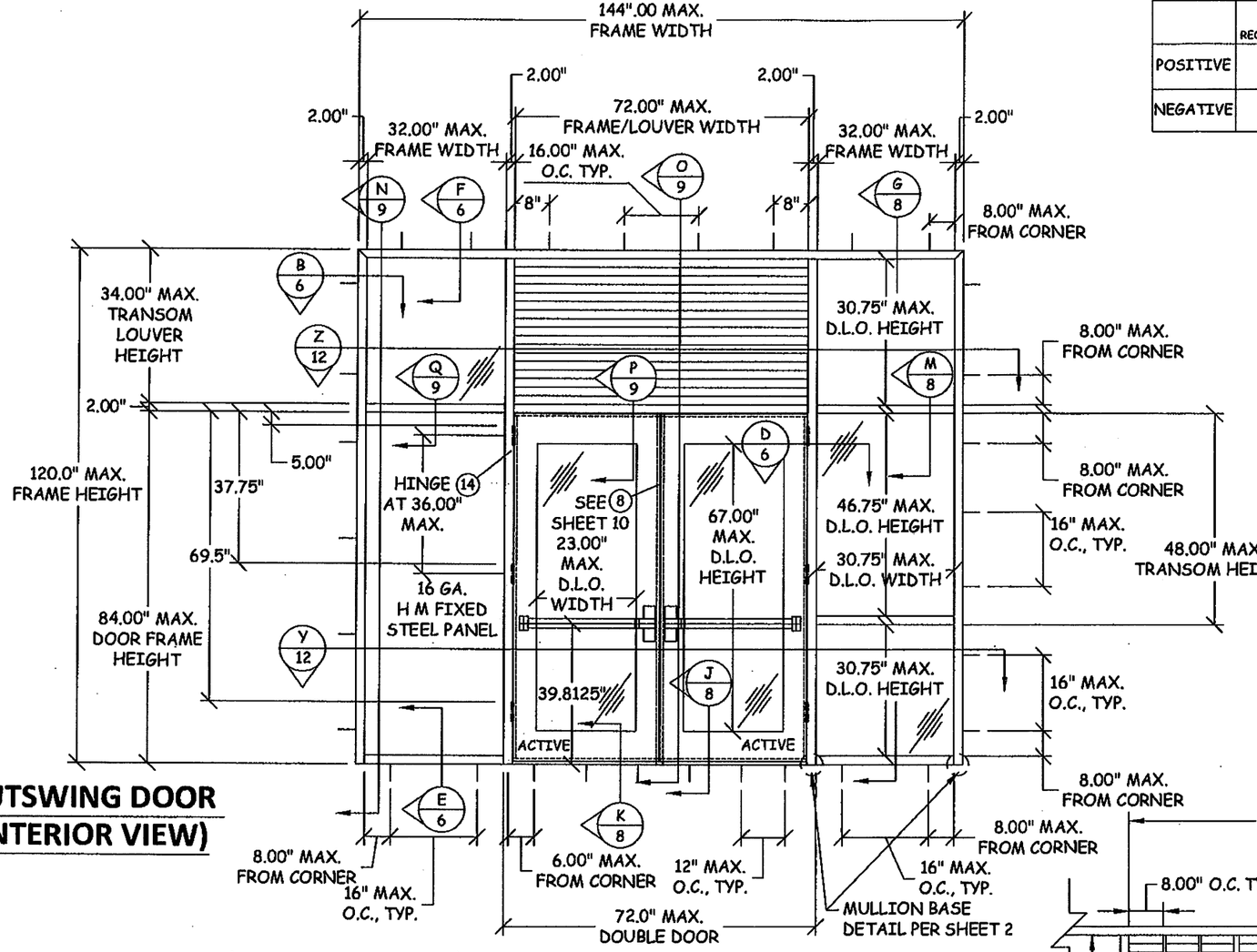

OUTSWING DOOR
(INTERIOR VIEW)

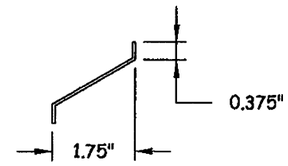

16 GA. STEEL BLADES

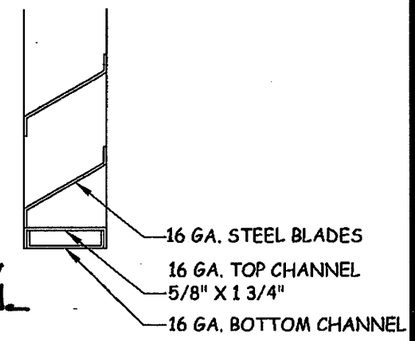

PRODUCT REVISED
as complying with the Florida Building Code
Acceptance No. 12-1115.11
Expiration Date 8/22/14
By Ishaq I. Chanda
Miami Dade Product Control

A/4 VERTICAL SECTION
LOUVER INSERT
WELDED TO FRAME

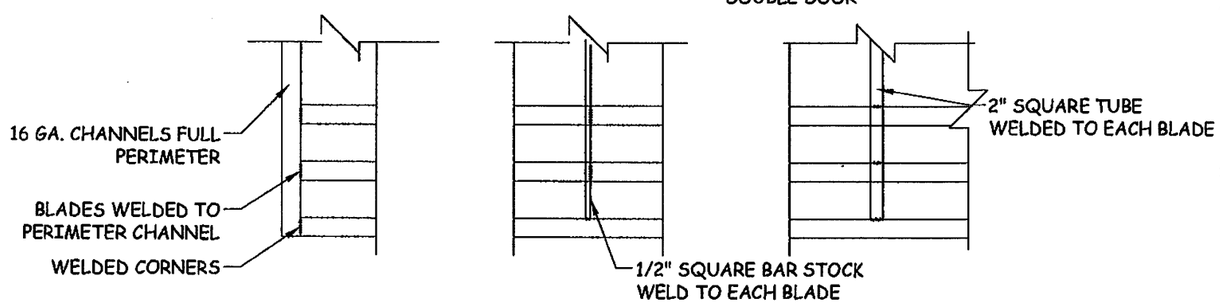

LOUVER INSERT CORNER DETAIL

LOUVER INSERT DETAIL AT 1/2" BAR STOCK

LOUVER INSERT DETAIL AT 2" SQUARE TUBE

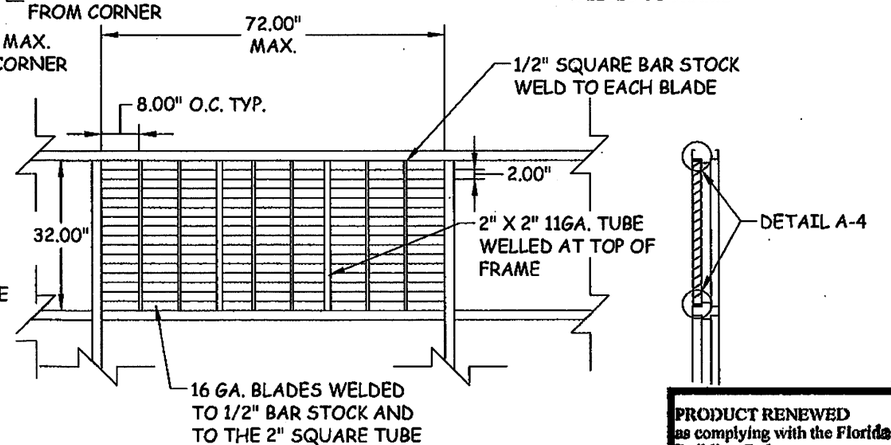

TRANSOM LOUVER INSERT
WELDED TO FRAME

PRODUCT RENEWED
as complying with the Florida Building Code
Acceptance No 09-06 17.03
Expiration Date AUG. 27, 2014
By Ishaq I. Chanda
Miami Dade Product Control Division

Quality Engineered Products Co., Inc.

TITLE: STOREFRONT SYSTEM (LMI) LOUVER ELEVATION & DETAILS

PREPARED FOR:

QUALITY ENGINEERED PRODUCTS
4506 QUALITY LN.
TAMPA, FL 33634
PH: 813.885.1693 FX: 813.884.2673

REVISIONS

NO.	DESCRIPTION	BY	DATE

OCT 07 2009

DAVID M. SCHONACHER, P.E.
FLORIDA REG. # 63951
(NOT VALID WITHOUT SEAL)

DATE: 06.10.09
DWN BY: GRN
CHK BY: HN
SCALE: NTS

DWG #: QEP004

SHEET: 4 OF 13

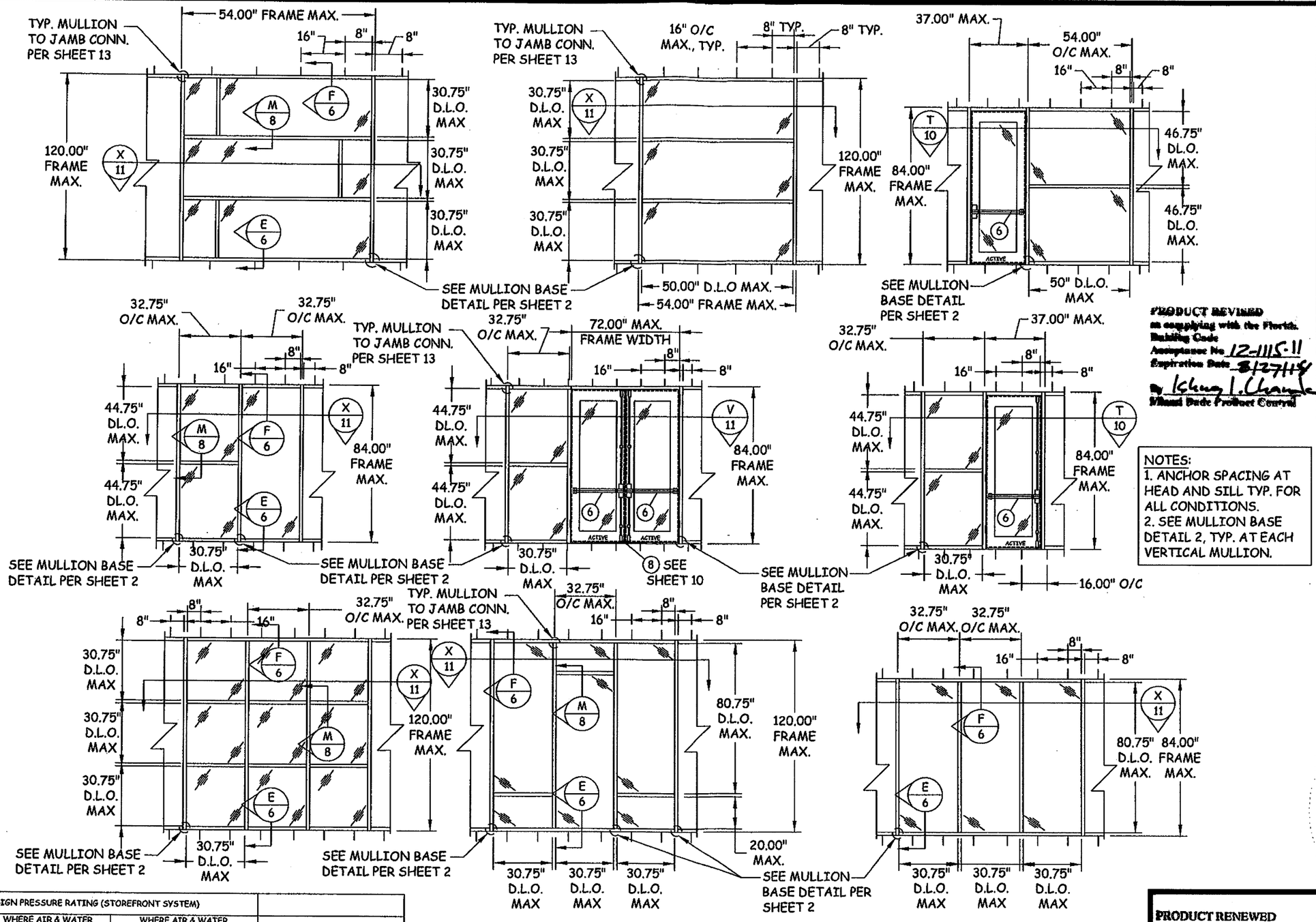

DESIGN PRESSURE RATING (STOREFRONT SYSTEM)			
	WHERE AIR & WATER INFILTRATION REQUIREMENTS IS NEEDED	WHERE AIR & WATER INFILTRATION REQUIREMENTS IS NOT NEEDED	MISSILE IMPACT RATING
POSITIVE	+60 PSF	+60 PSF	LARGE & SMALL MISSILE IMPACT RATED
NEGATIVE	-60 PSF	-60 PSF	LARGE & SMALL MISSILE IMPACT RATED

NOTES:
1. ANCHOR SPACING AT HEAD AND SILL TYP. FOR ALL CONDITIONS.
2. SEE MULLION BASE DETAIL 2, TYP. AT EACH VERTICAL MULLION.

PRODUCT REVISED
as complying with the Florida Building Code
Acceptance No 12-1115.11
Expiration Date 8/27/14
By Ichay I. Chang
Miami Dade Product Control

PRODUCT RENEWED
as complying with the Florida Building Code
Acceptance No 09-0617.03
Expiration Date AUG. 27, 2014
By Ishay I. Unreich
Miami Dade Product Control Division

Quality Engineered Products Co., Inc.

TITLE: STOREFRONT SYSTEM (LMI) CONFIGURATIONS

PREPARED FOR:

QUALITY ENGINEERED PRODUCTS
4506 QUALITY LN.
TAMPA, FL 33634
PH: 813.885.1693 FX: 813.884.2673

REVISIONS

NO.	DESCRIPTION	BY	DATE

OCT 07 2009

DAVID M. SCHONACHER, P.E.
FLORIDA REG. # 63151
(NOT VALID WITHOUT SEAL)

DATE:	DWN BY:	CHK BY:	SCALE:
06.10.09	GRN	HN	NTS

DWG #: QEP004

SHEET: 5 OF 13

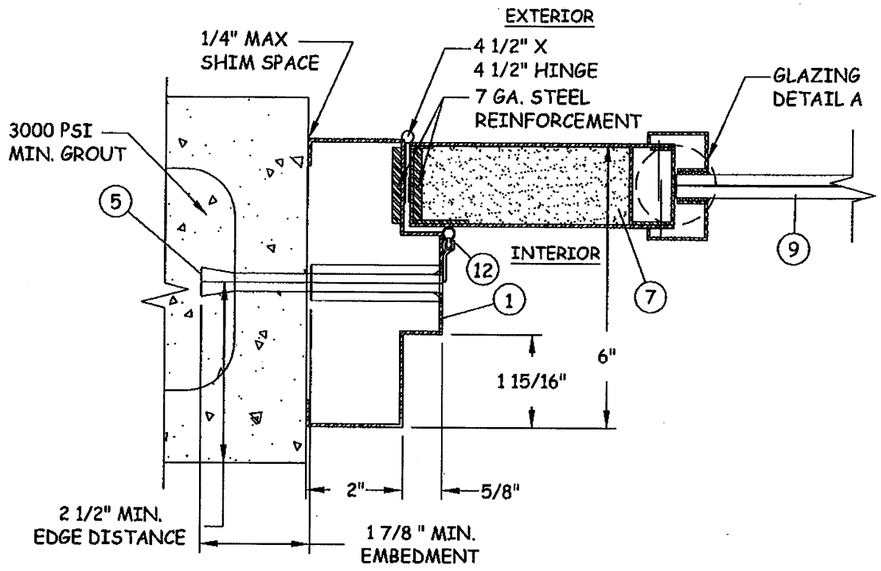

C/6 FRAME JAMB

ANCHOR BOLT

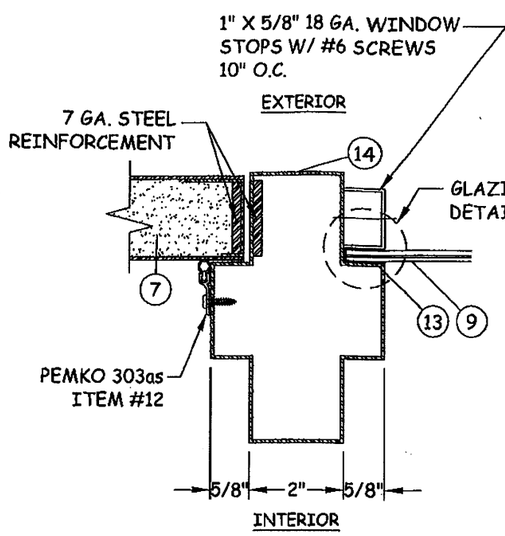

D/6 MULLION

STRIKE JAMB (SINGLE OUTSWING DOORS)
HINGE JAMB (PAIR OUTSWING DOORS)

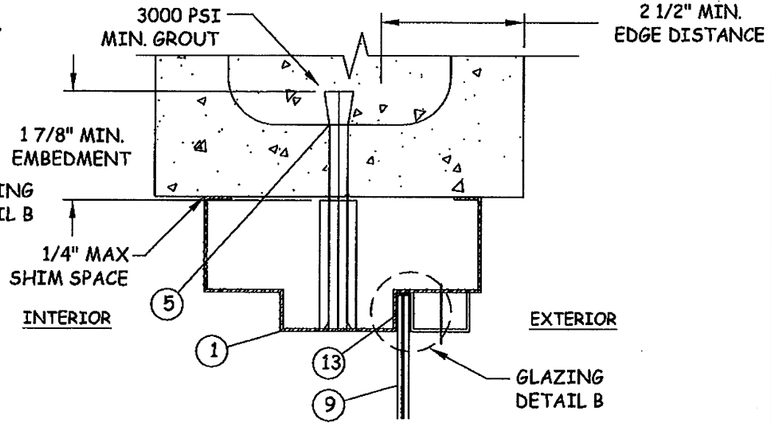

F/6 VERTICAL SECTION

HEAD- CONCRETE/MASONARY

PRODUCT REVISED
as complying with the Florida Building Code
Acceptance No. 12-1115.11
Expiration Date 5/27/14
By Ishaq I. Ghauri
Miami Dade Product Control

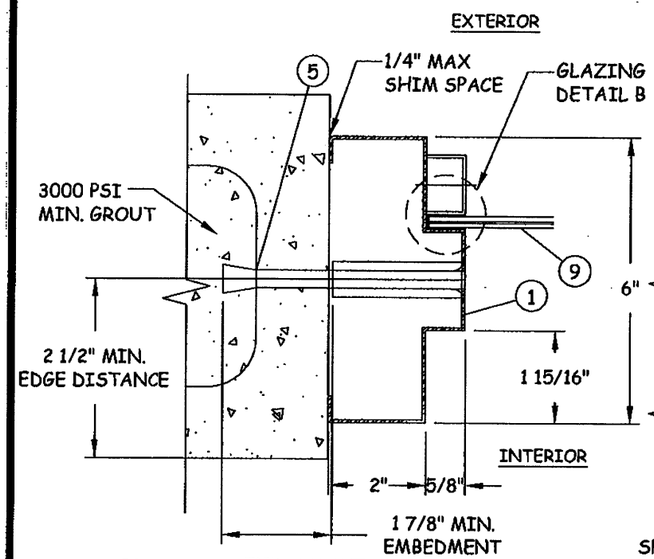

B/6 FRAME JAMB

ANCHOR BOLT

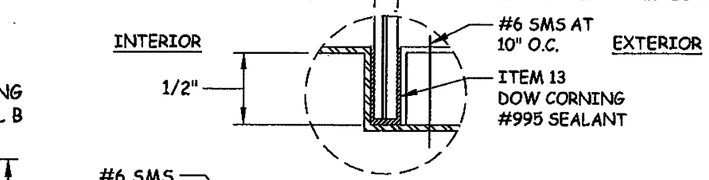

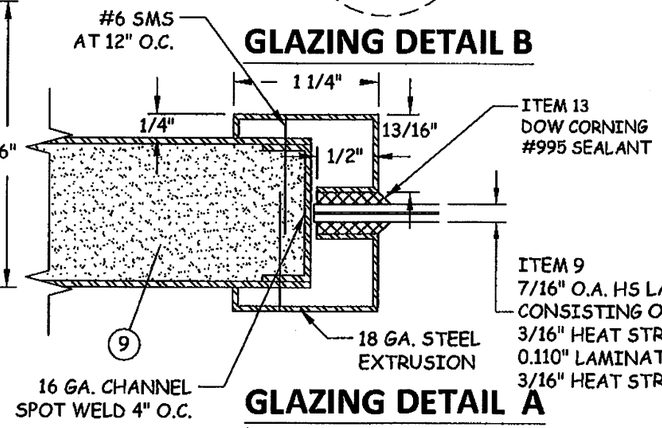

GLAZING DETAIL A

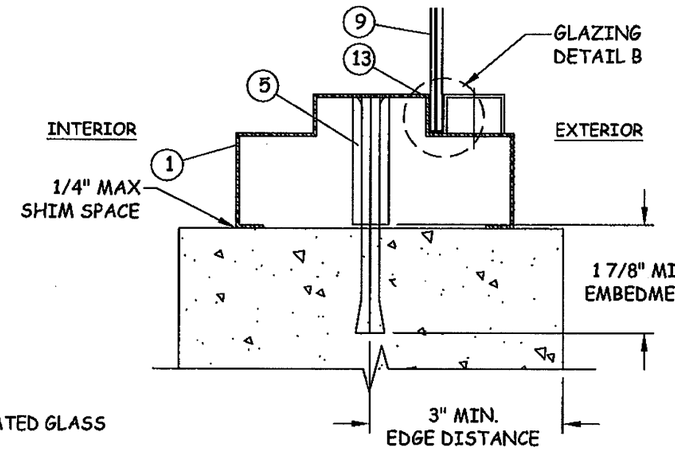

E/6 VERTICAL SECTION

SILL- CONCRETE/MASONARY

PRODUCT RENEWED
as complying with the Florida Building Code
Acceptance No. 09-0617.03
Expiration Date 06.27.2014
By Ishaq I. Ghauri
Miami Dade Product Control Division

Quality Engineered Products Co., Inc.

TITLE: STOREFRONT SYSTEM (LMI) VERTICAL & HORIZONTAL SECTIONS & GLZ DETAILS

PREPARED FOR:

QUALITY ENGINEERED PRODUCTS
4506 QUALITY LN.
TAMPA, FL 33634
PH: 813.885.1693 FX: 813.884.2673

REVISIONS

NO.	DESCRIPTION	BY	DATE

OCT 07 2009

DAVID M. SCHONACHER, P.E.
FLORIDA REG. # 63131
(NOT VALID WITHOUT SEAL)

DATE:	DWN BY:	CHK BY:	SCALE:
06.10.09	GRN	HN	NTS

DWG #: QEP004

SHEET: 6 OF 13

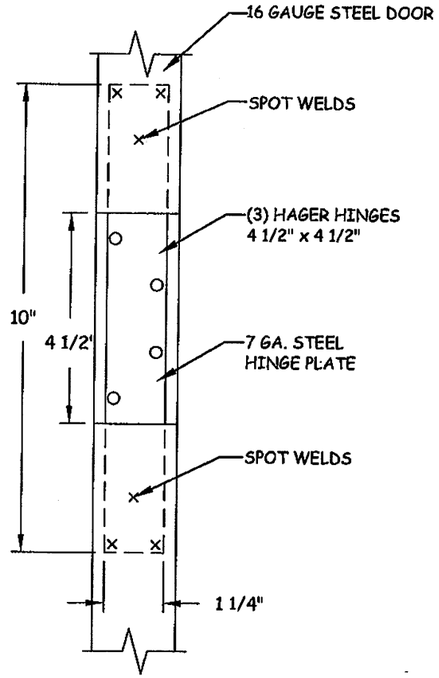

DOOR HINGE STEEL
REINFORCEMENT

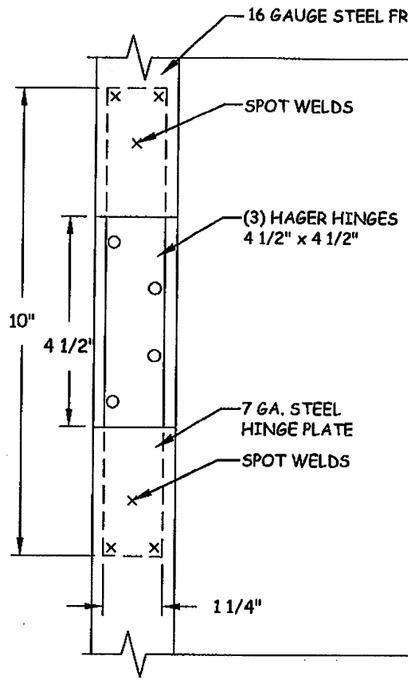

DOOR HINGE STEEL
REINFORCEMENT

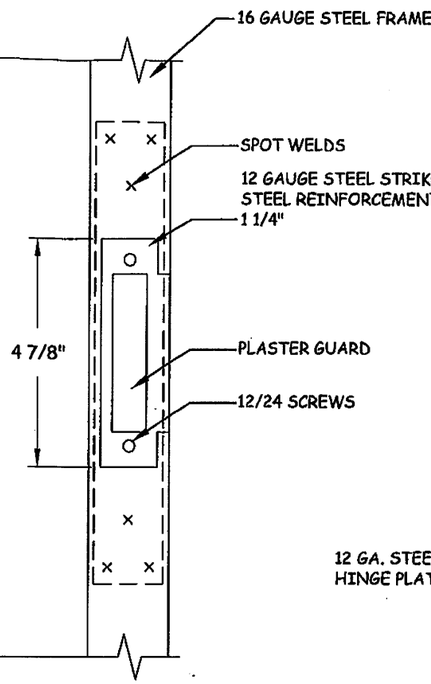

DOOR STRIKE STEEL
REINFORCEMENT

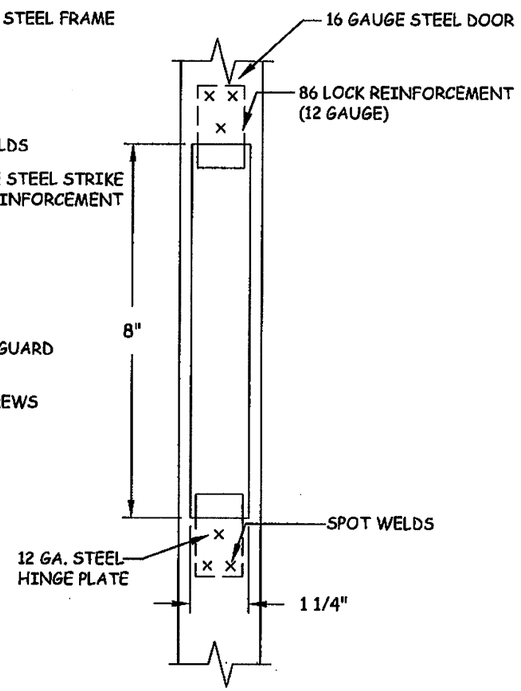

DOOR LOCK STEEL
REINFORCEMENT

DETAIL A

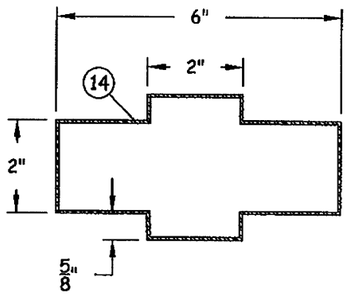

16 GA. HORIZONTAL &
VERTICAL MULLION

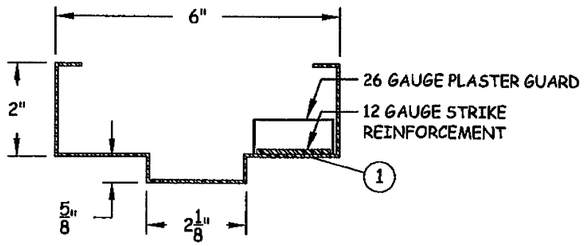

PLASTER GUARD
W/ 16 GA. JAMB

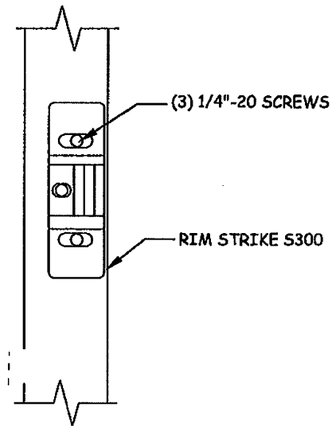

RIM STRIKE PRECISION 822
REMOVABLE MULLION

PRODUCT REVISED
as complying with the Florida
Building Code
Acceptance No 12-1115.11
Expiration Date 3/27/14
By Shang J. Chang
Miami Dade Product Control

PRODUCT RENEWED
as complying with the Florida
Building Code
Acceptance No 09-0617.03
Expiration Date AUG. 27, 2014
By Shang J. Chang
Miami Dade Product Control
Division

Quality
Engineered
Products Co., Inc.

TITLE:
STOREFRONT SYSTEM (LMI)
DOOR &
FRAME REINFORCEMENTS

PREPARED FOR:

QUALITY ENGINEERED PRODUCTS
4506 QUALITY LN.
TAMPA, FL 33634
PH: 813.885.1693 FX: 813.884.2673

REVISIONS

NO.	DESCRIPTION	BY	DATE

OCT 07 2009

DAVID M. SCHONACHER, P.E.
FLORIDA REG. # 63131
(NOT VALID WITHOUT SEAL)

DATE:	DWN BY:	CHK BY:	SCALE:
06.10.09	GRN	HN	NTS

DWG #:
QEP004

SHEET: 7 OF 13

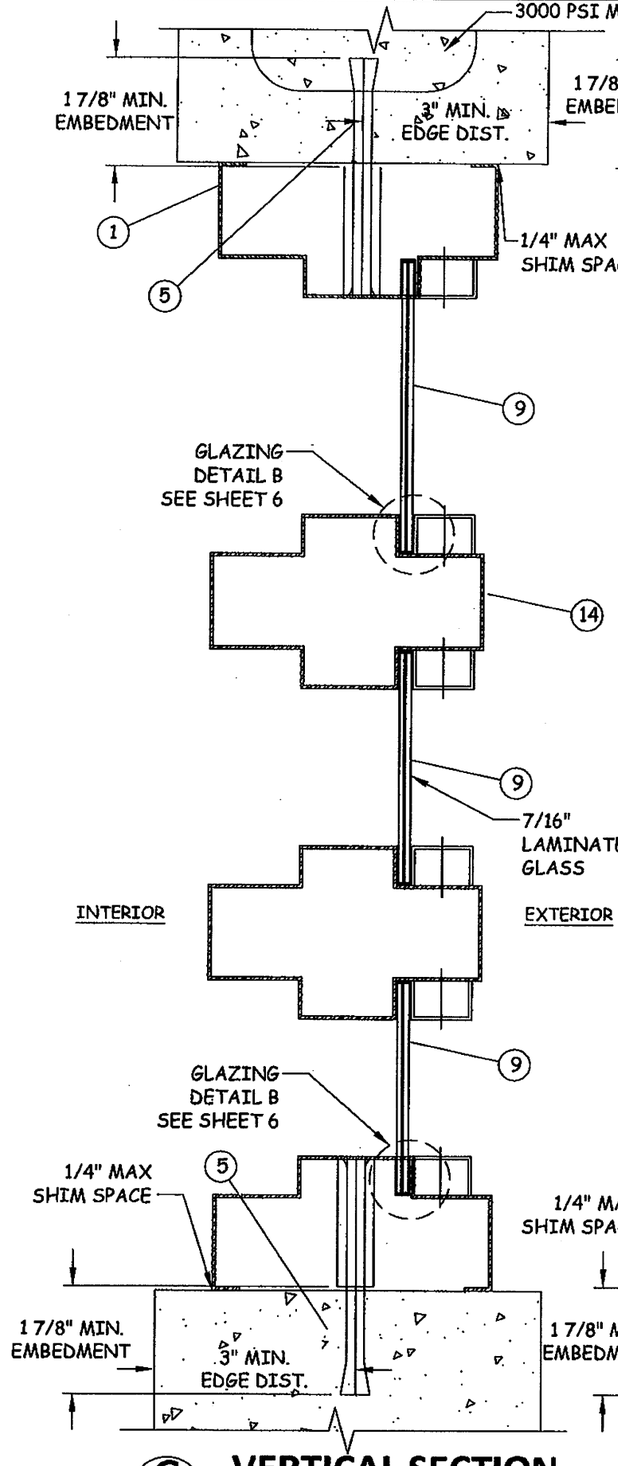

G/8 VERTICAL SECTION
2 MULLIONS

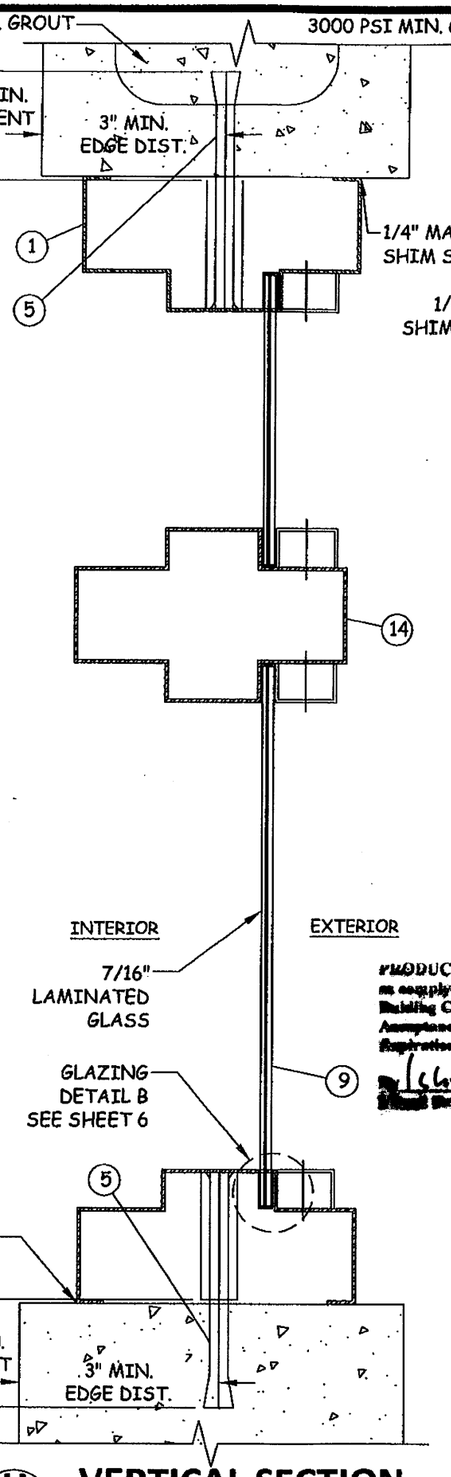

H/8 VERTICAL SECTION
1 MULLION

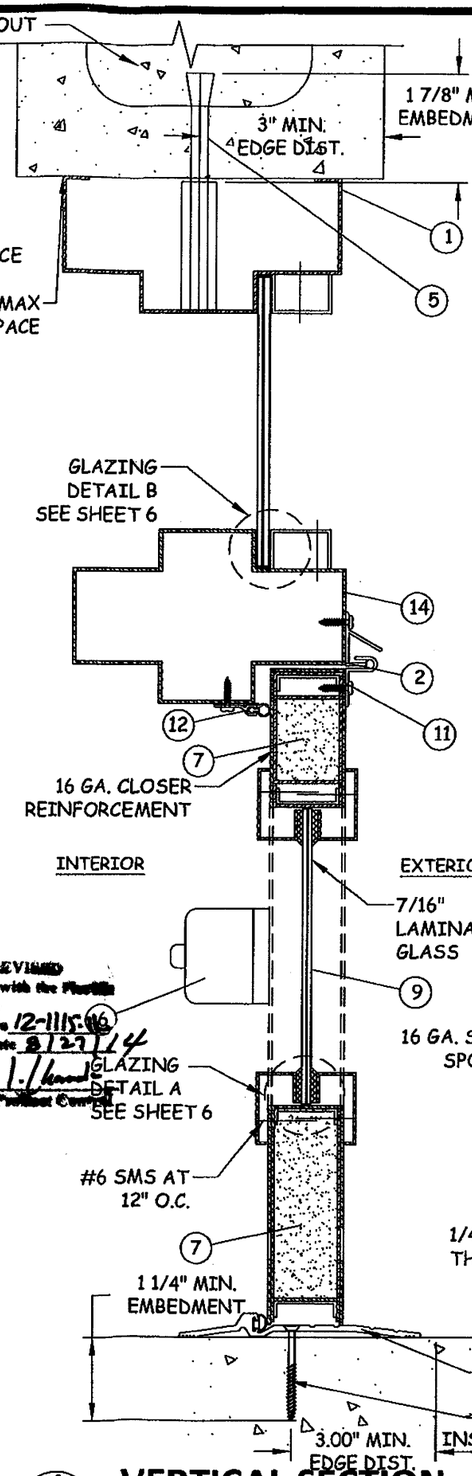

J/8 VERTICAL SECTION
DOOR AND MULLION

PRODUCT REVIEWED as complying with the Florida Building Code
Acceptance No 12-1115.16
Expiration Date 8/27/14
Miami Dade Product Control Division

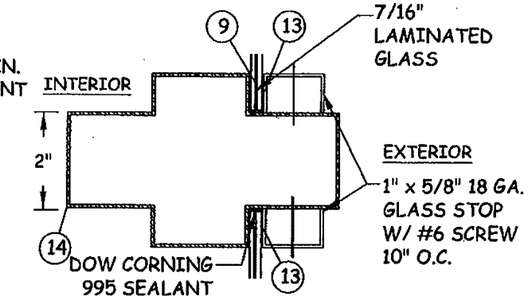

M/8 VERTICAL SECTION
MULLION

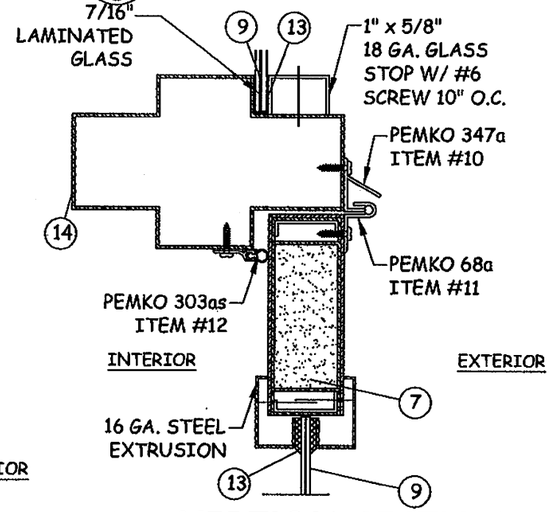

L/8 VERTICAL SECTION
MULLION ABOVE DOOR

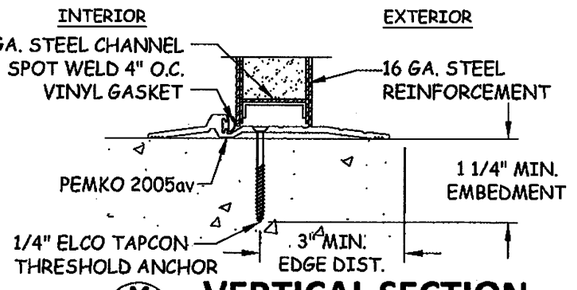

K/8 VERTICAL SECTION
SILL - CONCRETE/MASONRY

PRODUCT RENEWED as complying with the Florida Building Code
Acceptance No 09-0617.03
Expiration Date 8.27.2014
Miami Dade Product Control Division

Quality Engineered Products Co., Inc.

TITLE: STOREFRONT SYSTEM (LMI)
VERTICAL SECTIONS

PREPARED FOR:
QUALITY ENGINEERED PRODUCTS
4506 QUALITY LN.
TAMPA, FL 33634
PH: 813.885.1693 FX: 813.884.2673

REVISIONS

NO.	DESCRIPTION	BY	DATE

OCT 07 2009

DAVID M. SCHONACHER, P.E.
FLORIDA REG. # 63151
(NOT VALID WITHOUT SEAL)

DATE: 06.10.09
DWN BY: GRN
CHK BY: HN
SCALE: NTS

DWG #: QEP004

SHEET: 8 OF 13

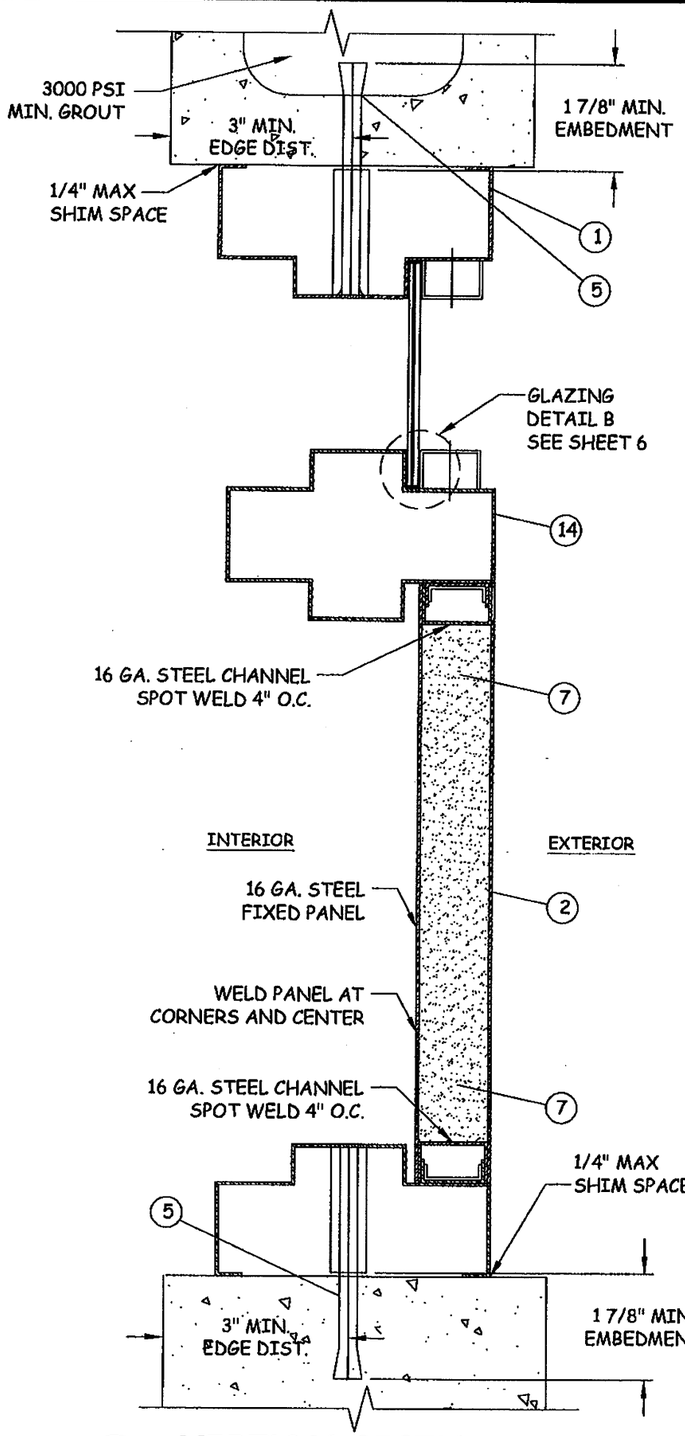

N/9 VERTICAL SECTION
FIXED PANEL AND MULLION

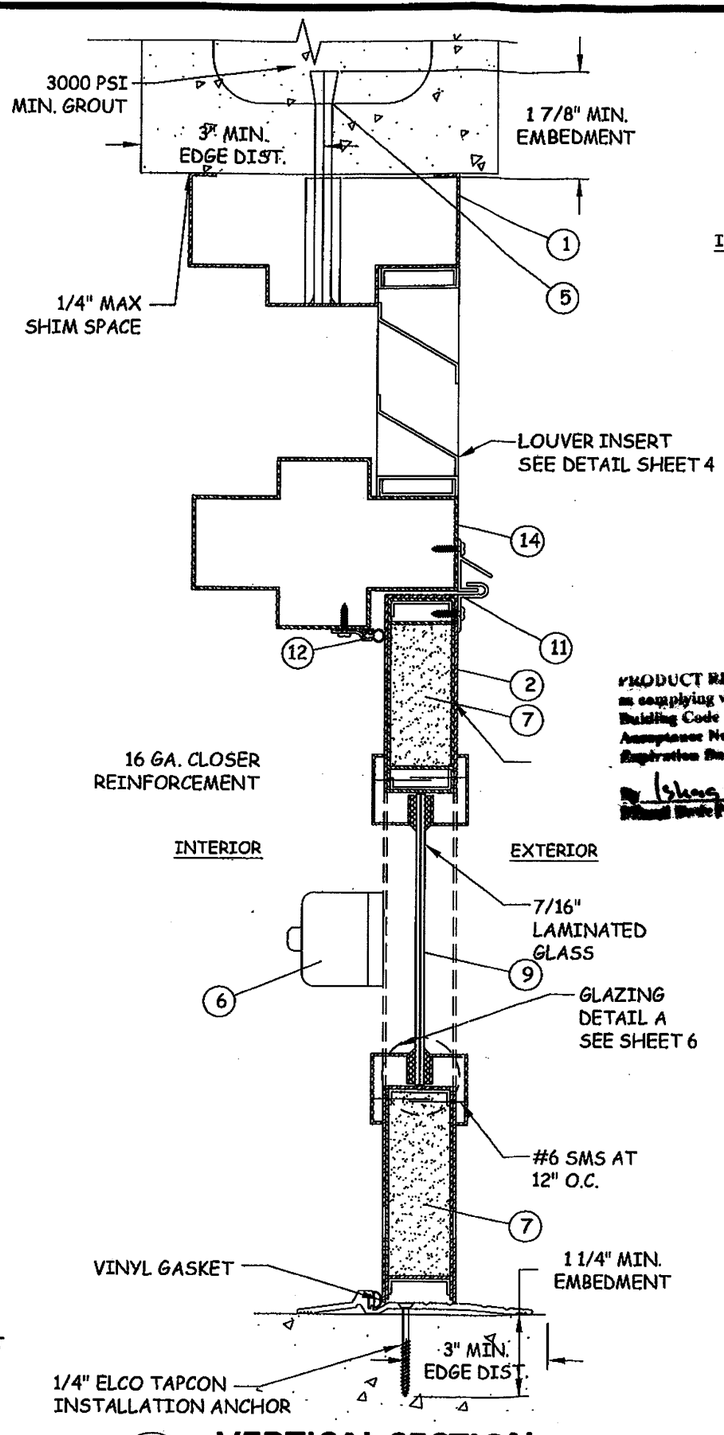

O/9 VERTICAL SECTION
DOOR AND MULLION LOUVER INSERT

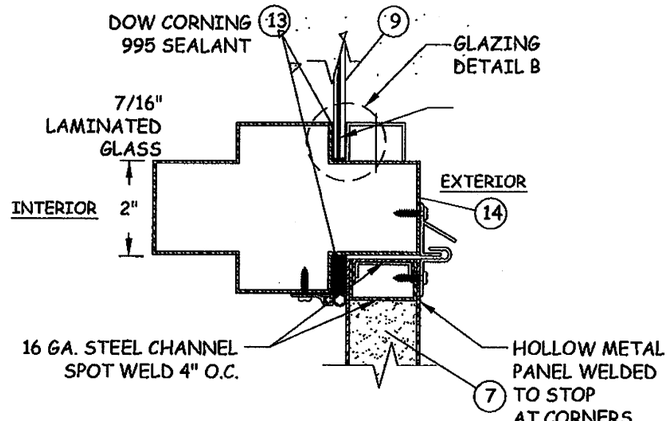

Q/9 VERTICAL SECTION
FIXED PANEL AND MULLION

PRODUCT REVISED
as complying with the Florida Building Code
Acceptance No: 12-1115.11
Expiration Date: 8/27/14
By: Isaac I. Chang
Miami Dade Product Control

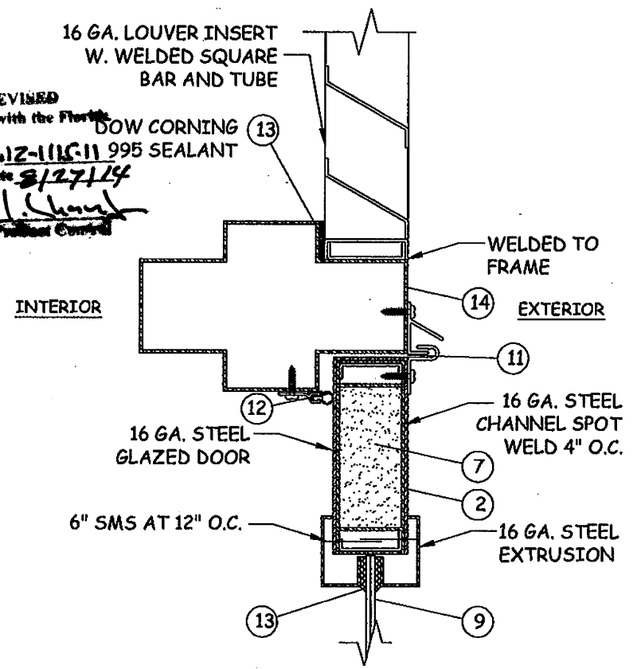

P/9 VERTICAL SECTION
MULLION W/ LOUVER TRANSOM AND GLAZED DOOR

PRODUCT RENEWED
as complying with the Florida Building Code
Acceptance No: 09-0617.03
Expiration Date: AUG. 28, 2014
By: Isaac I. Chang
Miami Dade Product Control Division

Quality Engineered Products Co., Inc.

TITLE: STOREFRONT SYSTEM (LMI)
VERTICAL SECTIONS

PREPARED FOR:
QUALITY ENGINEERED PRODUCTS
4506 QUALITY LN.
TAMPA, FL 33634
PH: 813.885.1693 FX: 813.884.2673

REVISIONS

NO.	DESCRIPTION	BY	DATE

OCT 07 2009
DAVID M. SCHONACHER, P.E.
FLORIDA REG. # 63951
(NOT VALID WITHOUT SEAL)

DATE: 06.10.09
DWN BY: GRN
CHK BY: HN
SCALE: NTS

DWG #: QEP004

SHEET: 9 OF 13

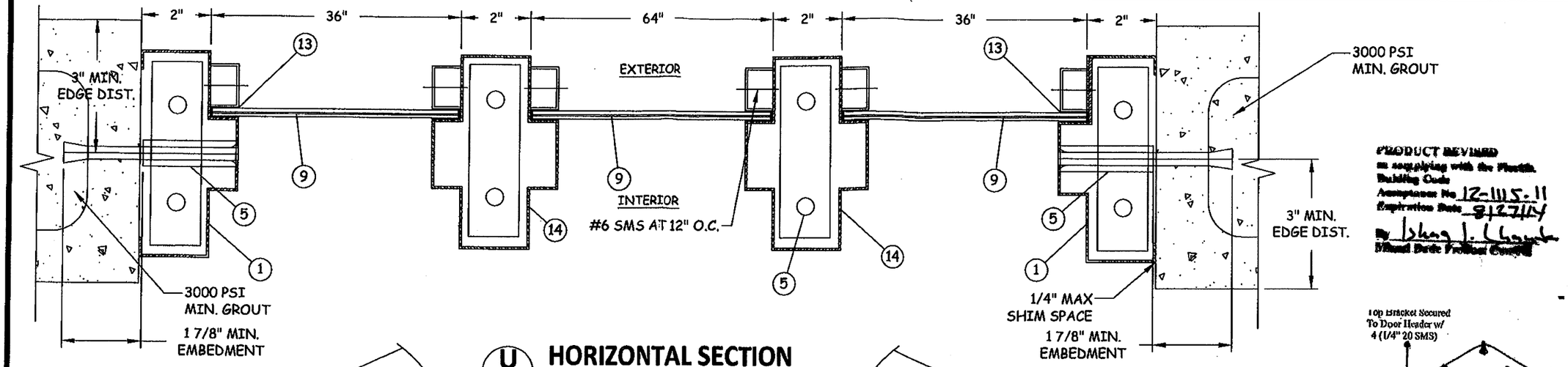

U/10 HORIZONTAL SECTION

MULLION W/ 64" WIDE GLASS

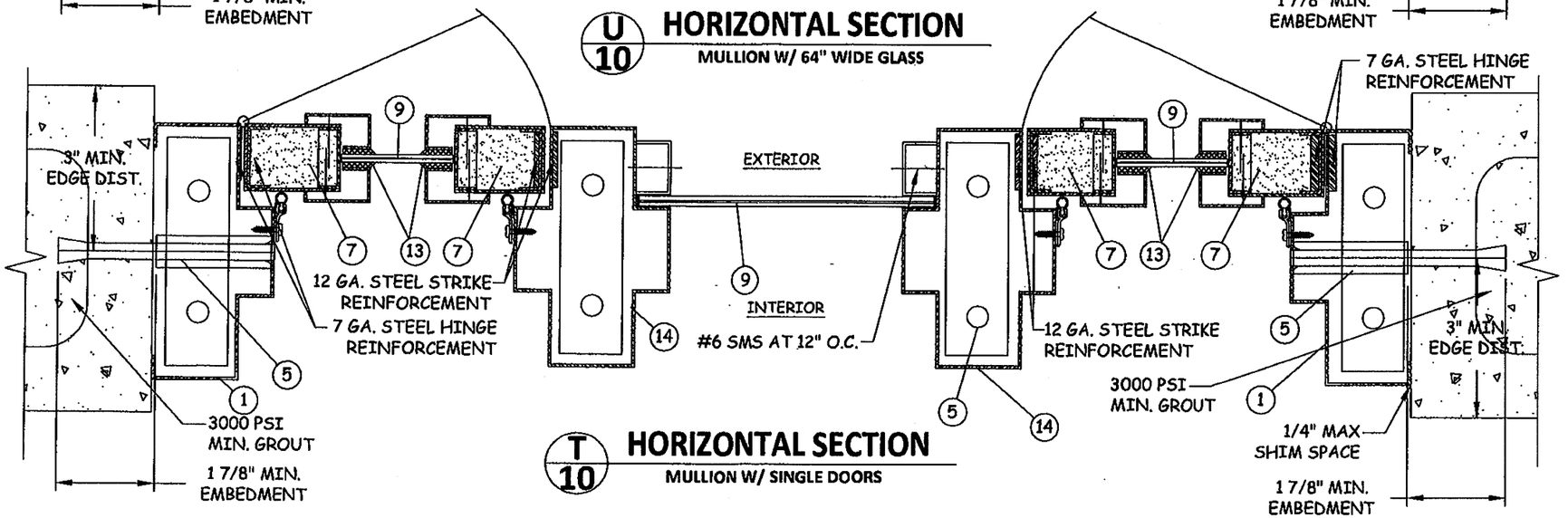

T/10 HORIZONTAL SECTION

MULLION W/ SINGLE DOORS

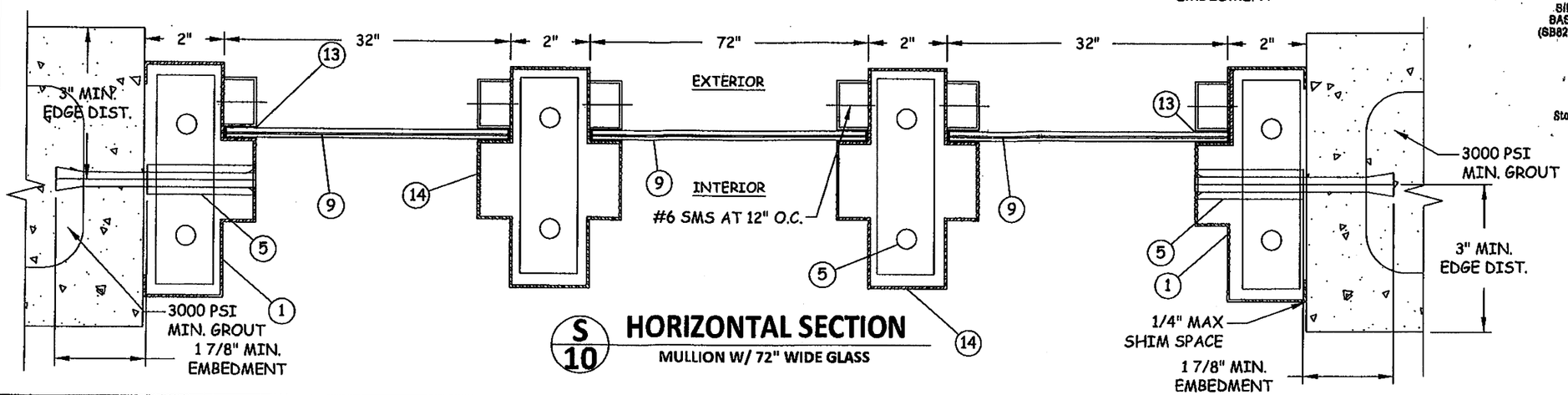

S/10 HORIZONTAL SECTION

MULLION W/ 72" WIDE GLASS

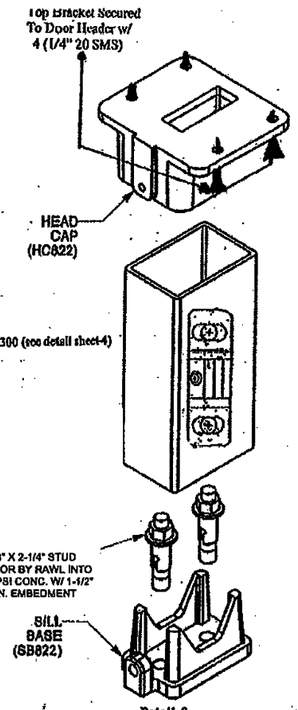

Detail-2
Precision FL822 Removable Steel Mullion @ Pairs Of Doors

PRODUCT REVIEWED
as complying with the Florida Building Code
Acceptance No 12-1115.11
Expiration Date 8/27/14
By Ishaq I. Chanda
Miami Dade Product Control

PRODUCT RENEWED
as complying with the Florida Building Code
Acceptance No 09-0617.03
Expiration Date 06.25.2014
By Ishaq I. Chanda
Miami Dade Product Control Division

Quality Engineered Products Co., Inc.

TITLE: STOREFRONT SYSTEM (LMI) HORIZONTAL SECTIONS & DETAILS

PREPARED FOR:

QUALITY ENGINEERED PRODUCTS
4506 QUALITY LN.
TAMPA, FL 33634
PH: 813.885.1693 FX: 813.884.2673

REVISIONS

NO.	DESCRIPTION	BY	DATE

OCT 07 2009

DAVID M. SCHONACHER, P.E.
FLORIDA REG. # 63131
(NOT VALID WITHOUT SEAL)

DATE: 06.10.09
DWN BY: GRN
CHK BY: HN
SCALE: NTS

DWG #: QEP004

SHEET: 10 OF 13

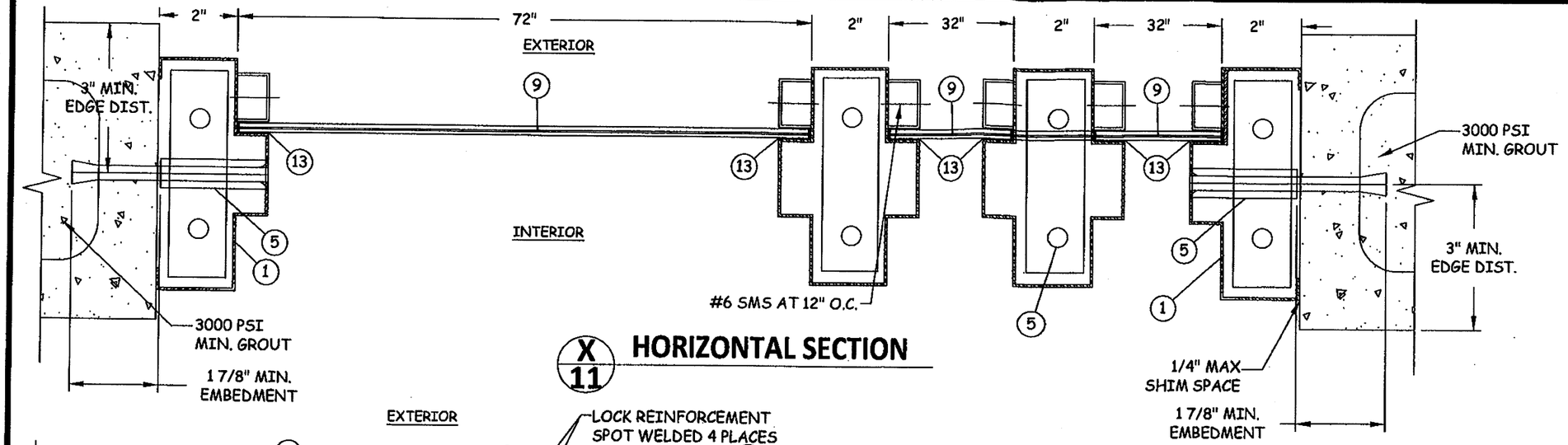

X/11 HORIZONTAL SECTION

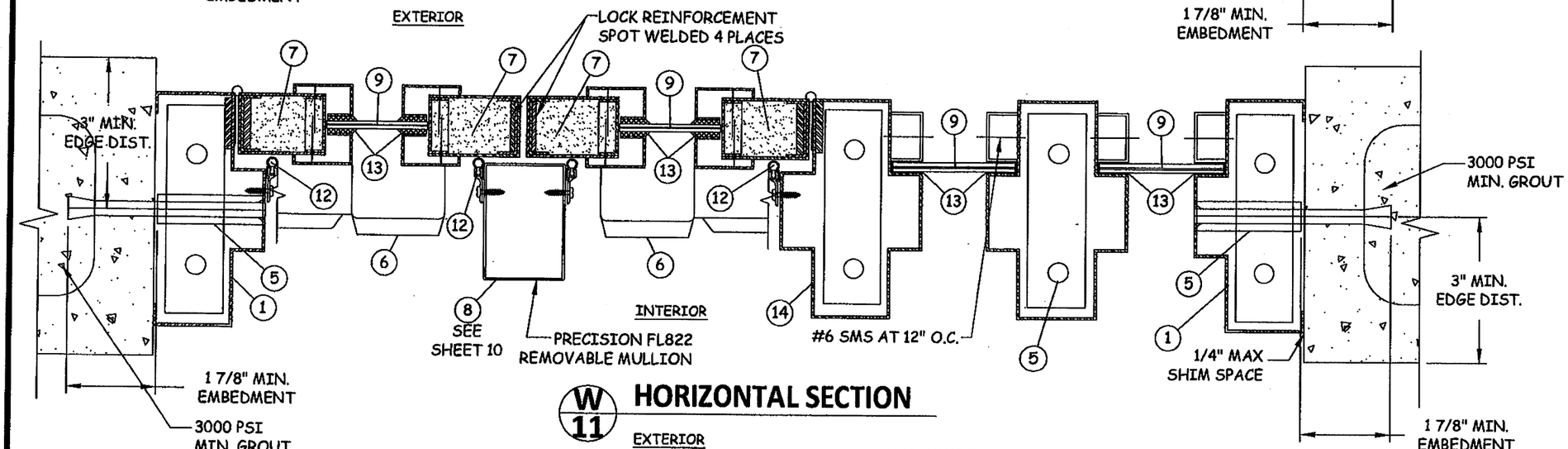

W/11 HORIZONTAL SECTION

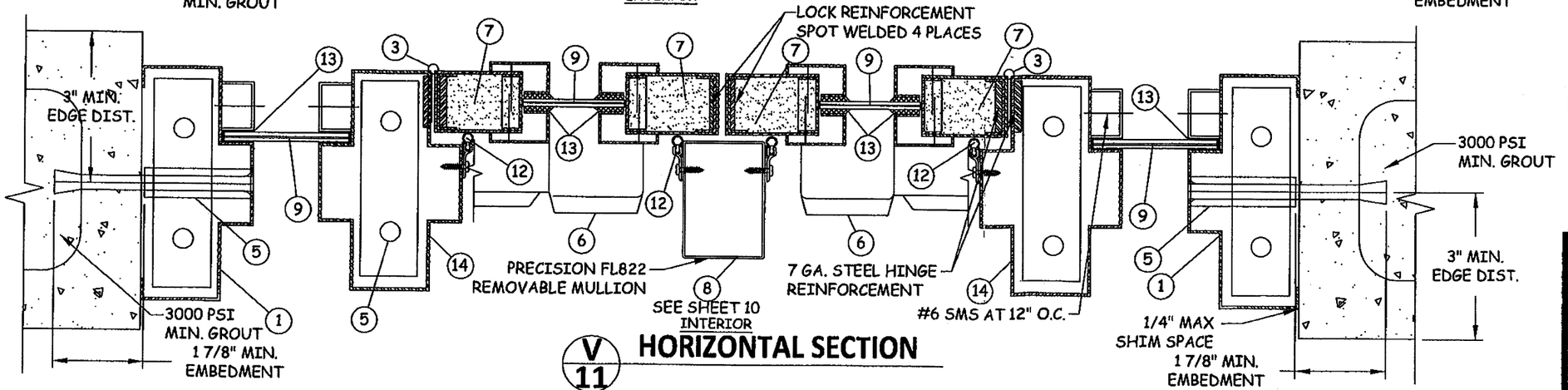

V/11 HORIZONTAL SECTION

Quality Engineered Products Co., Inc.

TITLE: STOREFRONT SYSTEM (LMI)
HORIZONTAL SECTIONS

PREPARED FOR:

QUALITY ENGINEERED PRODUCTS
4506 QUALITY LN.
TAMPA, FL 33634
PH: 813.885.1693 FX: 813.884.2673

REVISIONS

NO.	DESCRIPTION	BY	DATE

PRODUCT REVISED
is complying with the Florida Building Code
Acceptance No 12-1115.11
Expiration Date 8/27/14
By Ishaq I. Chanda
Miami Dade Product Control Division

PRODUCT RENEWED
is complying with the Florida Building Code
Acceptance No 09-0617.03
Expiration Date Aug. 27, 2014
By Ishaq I. Chanda
Miami Dade Product Control Division

OCT 07 2009

DAVID F. SCHUMACHER, P.E.
FLORIDA REG. # 63131
(NOT VALID WITHOUT SEAL)

DATE:	DWN BY:	CHK BY:	SCALE:
06.10.09	GRN	HN	NTS

DWG #: QEP004

SHEET: 11 OF 13

BILL OF MATERIALS		
MARK	QUANTITY	DESCRIPTION
1	1	16 GA. MINIMUM 14 GA. MAX STEEL HEAD/JAMB/SILL FRAME
2	2	16 GA. MINIMUM 14 GA. MAX STEEL DOOR, Fy = 49 ksi MIN.
3	6	HAGER HINGES BB1279 4 1/2" x 0.134"
4	1	PEMKO 2005av THRESHOLD
5	SEE ELEVATION	1/2" DIA. DYNABOLT ITW/REDHEAD SLEEVE ANCHOR (3/8" DIA.BOLT) X 4-1/2" SLEEVE ANCHOR W/ 3/4" DIA. WELDED PIPE SLEEVE W/ 1-7/8" MIN. EMBEDMENT & 3" MIN. EDGE DISTANCE
6	2	PRECISION HANDWARE RIM EXIT DEVICE HC 2100 W/ FL822 REMOVABLE MULLION (DOUBLE DOORS)
7	AS REQUIRED	EPS POLYSTRENE FOAM CORE BY APPACHE PRODUCTS W/ CURRENT NOA
8	1	PRECISION 822/KR822 REMOVABLE MULLION (DOUBLE DOORS)
9	AS REQUIRED	7/16" LAMINATED GLASS (3/16" HEAT STRENGTHENED GLASS - 0.110" UVEKOL INTERLAYER BY CYTEC, LAMINATED BY WEST TAMPA GLASS 3/16" HET STRENGTHENED GLASS)
10	1	PEMKO 347A TOP DRIP
11	2	PEMKO 68A DOOR TOP WEATHERSTRIP
12	3	PEMKO 303AS WEATHERSTRIP
13	AS REQUIRED	DOW CORNING #995 STRUCTURAL SILICONE SEALANT
14	AS REQUIRED	16 GA. MINIMUM 14 GA. MAX STEEL HORIZONTAL & VERTICAL MULLION

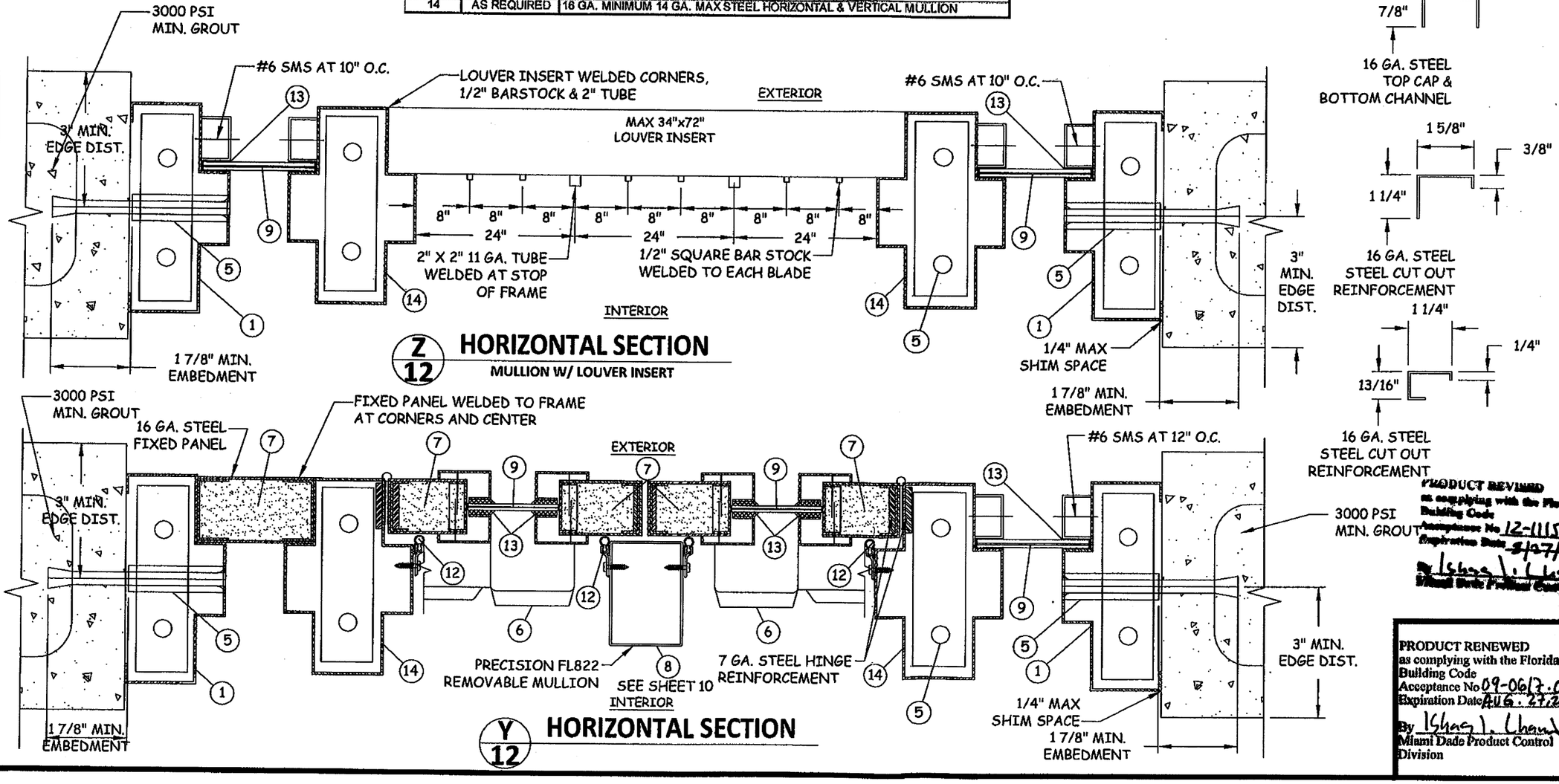

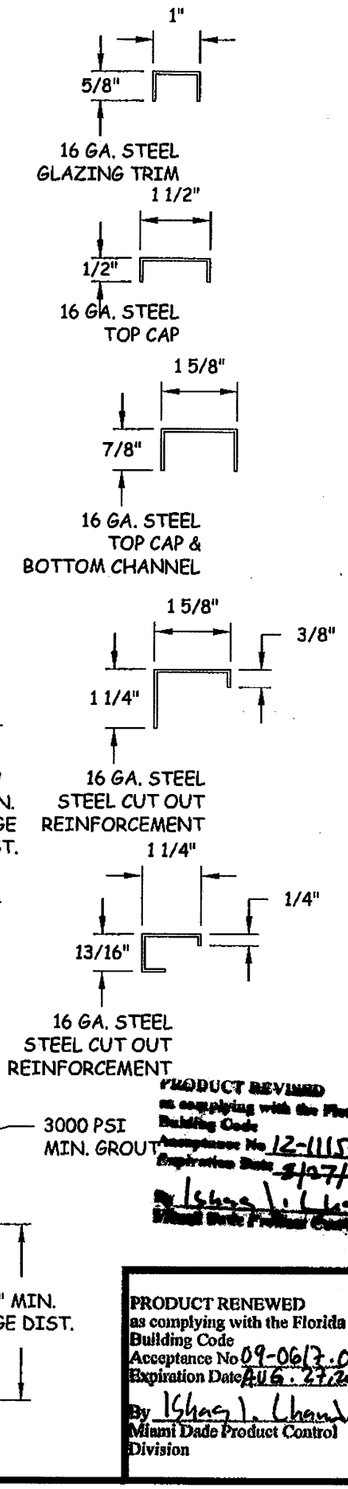

Quality Engineered Products Co., Inc.

TITLE: STOREFRONT SYSTEM (LMI) HORIZONTAL SECTIONS, BILL OF MATERIALS & DETAILS

PREPARED FOR:

QUALITY ENGINEERED PRODUCTS
4506 QUALITY LN.
TAMPA, FL 33634
PH: 813.885.1693 FX: 813.884.2673

REVISIONS

NO.	DESCRIPTION	BY	DATE

PRODUCT REVIEWED as complying with the Florida Building Code Acceptance No 12-1115.11 Expiration Date 8/07/14 By Ishaq I. Chanda Miami Dade Product Control

OCT 07 2009

DAVID M. SCHONCHER, P.E. FLORIDA REG. # 63131 (NOT VALID WITHOUT SEAL)

PRODUCT RENEWED as complying with the Florida Building Code Acceptance No 09-0617.03 Expiration Date AUG. 27, 2014 By Ishaq I. Chanda Miami Dade Product Control Division

DATE: 06.10.09 | DWN BY: GRN | CHK BY: HN | SCALE: NTS

DWG #: QEP004

SHEET: 12 OF 13

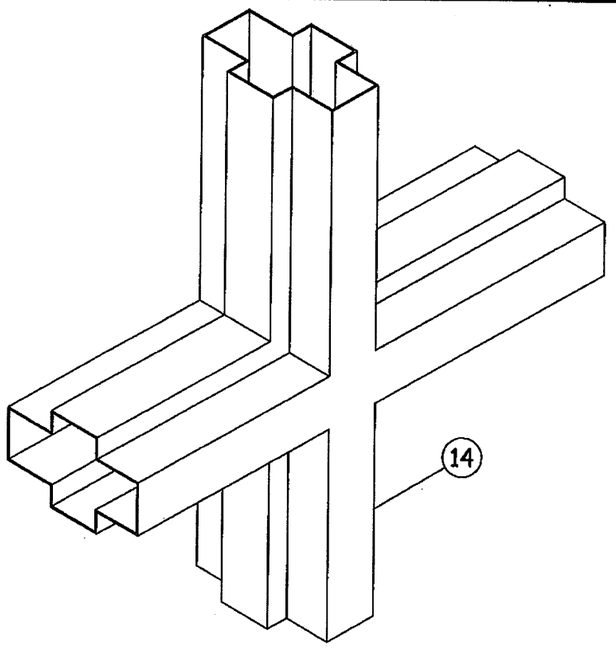

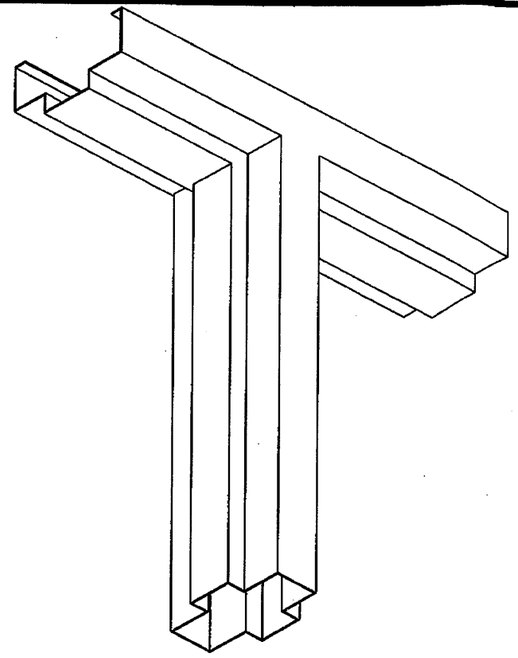

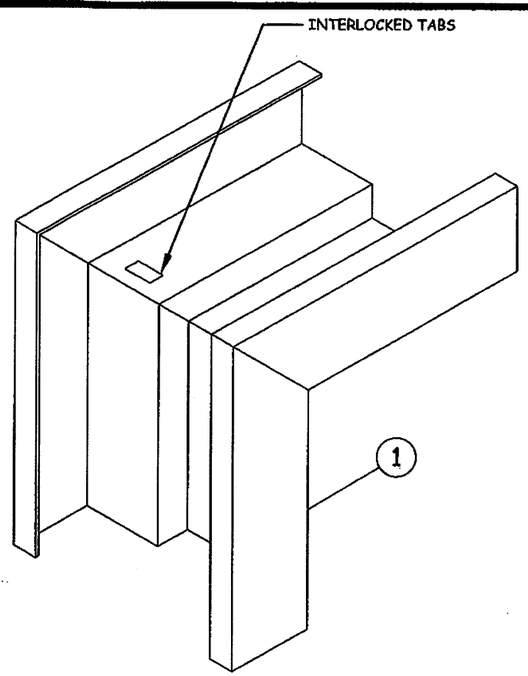

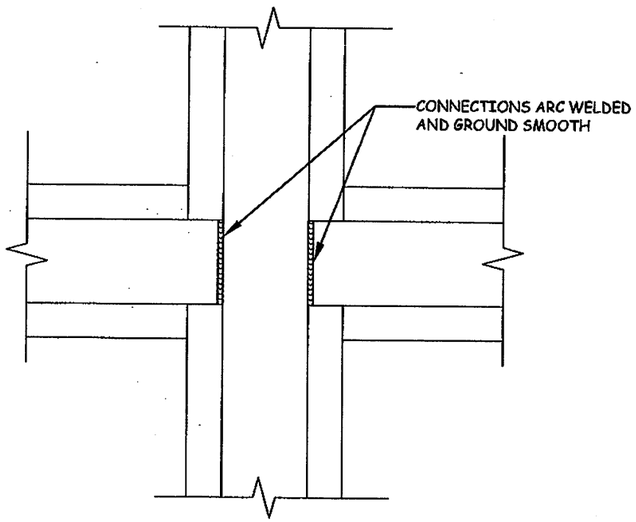

TYPICAL MULLION TO MULLION CONNECTION

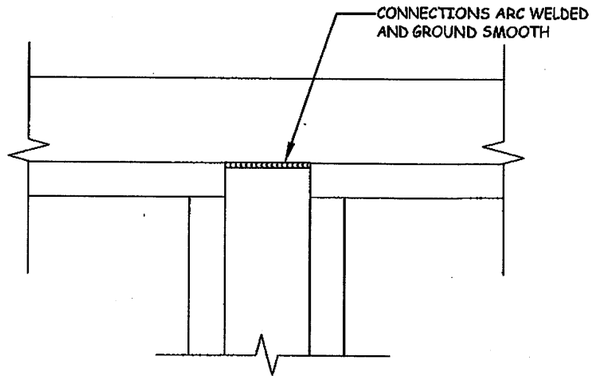

TYPICAL MULLION TO JAMB CONNECTION

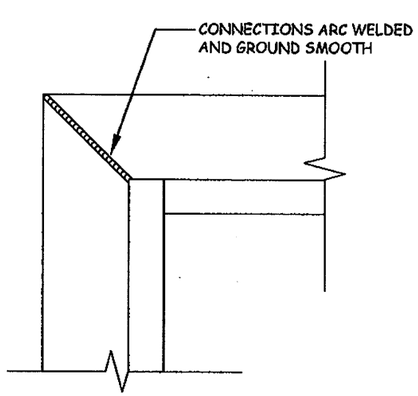

TYPICAL CORNER CONNECTION

PRODUCT REVISED
as complying with the Florida
Building Code
Acceptance No 12-1115.11
Expiration Date AUG 27, 2014
By Ishag I. Chandu
Miami Dade Product Control

PRODUCT RENEWED
as complying with the Florida
Building Code
Acceptance No 09-0617.03
Expiration Date AUG. 27, 2014
By Ishag I. Chandu
Miami Dade Product Control
Division

Quality Engineered Products Co., Inc.

TITLE:
STOREFRONT SYSTEM (LMI)
ISO-METRIC VIEWS

PREPARED FOR:
QUALITY ENGINEERED PRODUCTS
4506 QUALITY LN.
TAMPA, FL 33634
PH: 813.885.1693 FX: 813.884.2673

REVISIONS

NO.	DESCRIPTION	BY	DATE

OCT 07 2009

DAVID M. SCHONACHER, P.E.
FLORIDA REG. # 63131
(NOT VALID WITHOUT SEAL)

DATE: 06.10.09
DWN BY: GRN
CHK BY: HN
SCALE: NTS

DWG #: QEP004

SHEET: 13 OF 13