MIAMI-DADE COUNTY
DEPARTMENT OF REGULATORY AND ECONOMIC RESOURCES (RER)
BOARD AND CODE ADMINISTRATION DIVISION

MIAMI-DADE COUNTY
PRODUCT CONTROL SECTION
11805 SW 26 Street, Room 208
T (786) 315-2590 F (786) 315-2599
www.miamidade.gov/economy

NOTICE OF ACCEPTANCE (NOA)

Glasswall, LLC
3550 NW 49 Street
Miami, FL 33142

SCOPE:

This NOA is being issued under the applicable rules and regulations governing the use of construction materials. The documentation submitted has been reviewed and accepted by Miami-Dade County RER - Product Control Section to be used in Miami Dade County and other areas where allowed by the Authority Having Jurisdiction (AHJ).

This NOA shall not be valid after the expiration date stated below. The Miami-Dade County Product Control Section (In Miami Dade County) and/or the AHJ (in areas other than Miami Dade County) reserve the right to have this product or material tested for quality assurance purposes. If this product or material fails to perform in the accepted manner, the manufacturer will incur the expense of such testing and the AHJ may immediately revoke, modify, or suspend the use of such product or material within their jurisdiction. RER reserves the right to revoke this acceptance, if it is determined by Miami-Dade County Product Control Section that this product or material fails to meet the requirements of the applicable building code.

This product is approved as described herein, and has been designed to comply with the Florida Building Code, including the High Velocity Hurricane Zone.

DESCRIPTION: Series "7000" Aluminum Curtain Wall System – S.M.I.

APPROVAL DOCUMENT: Drawing No. **AD12-65**, titled "Series 7000 Aluminum Curtain Wall – SMI", sheets 01, through 38 of 38, dated 05/09/13, prepared by MCY Engineering, Inc., signed and sealed by Yiping Wang, P.E., bearing the Miami-Dade County Product Control Approval stamp with the Notice of Acceptance number and approval date by the Miami-Dade County Product Control Section.

MISSILE IMPACT RATING: Small Missile Impact Resistant

LABELING: Each unit shall bear a permanent label with the manufacturer's name or logo, city, state, model/series, and following statement: "Miami-Dade County Product Control Approved", unless otherwise noted herein.

RENEWAL of this NOA shall be considered after a renewal application has been filed and there has been no change in the applicable building code negatively affecting the performance of this product.

TERMINATION of this NOA will occur after the expiration date or if there has been a revision or change in the materials, use, and/or manufacture of the product or process. Misuse of this NOA as an endorsement of any product, for sales, advertising or any other purposes shall automatically terminate this NOA. Failure to comply with any section of this NOA shall be cause for termination and removal of NOA.

ADVERTISEMENT: The NOA number preceded by the words Miami-Dade County, Florida, and followed by the expiration date may be displayed in advertising literature. If any portion of the NOA is displayed, then it shall be done in its entirety.

INSPECTION: A copy of this entire NOA shall be provided to the user by the manufacturer or its distributors and shall be available for inspection at the job site at the request of the Building Official.

This NOA consists of this page 1 and evidence page E-1, as well as approval document mentioned above.

The submitted documentation was reviewed by **Manuel Perez, P.E.**

MIAMI-DADE COUNTY APPROVED

5/31/13

Glasswall, LLC

NOTICE OF ACCEPTANCE: EVIDENCE SUBMITTED

A. DRAWINGS

1. Manufacturer's die drawings and sections.
2. Drawing No. **AD12-65**, titled "Series 7000 Aluminum Curtain Wall - SMI", sheets 01 through 38 of 38, dated 05/09/13, prepared by MCY Engineering, Inc. signed and sealed by Yiping Wang, P.E.

B. TESTS

1. Test reports on: 1) Air Infiltration Test, per FBC, TAS 202-94
   2) Uniform Static Air Pressure Test, Loading per FBC TAS 202-94
   3) Water Resistance Test, per FBC, TAS 202-94
   4) Small Missile Impact Test per FBC, TAS 201-94
   5) Large Missile Impact Test per FBC, TAS 201-94
   6) Cyclic Wind Pressure Loading per FBC, TAS 203-94

   along with marked-up drawings and installation diagram of a series 7000 aluminum curtain wall system, prepared by Fenestration Testing Laboratory, Inc., Test Report No. **FTL-7147**, dated 02/04/13, signed and sealed by Marlin D. Brinson, P.E.

C. CALCULATIONS

1. Anchor verification calculations and structural analysis complying with FBC-2010, dated 04/07/13 and 05/06/13, prepared by MCY Engineering, Inc., signed and sealed by Yiping Wang, P.E.
2. Glazing complies with ASTM E1300-04

D. QUALITY ASSURANCE

1. Miami-Dade Department of Regulatory and Economic Resources (RER)

E. MATERIAL CERTIFICATIONS

1. Notice of Acceptance No. **13-0129.27** issued to **E.I. DuPont DeNemours & Co., Inc.** for their **"DuPont Butacite® PVB Interlayer"** dated 04/11/13, expiring on 12/11/16.

F. STATEMENTS

1. Statement letter of conformance, complying with FBC-2010, dated 03/26/13, prepared by MCY Engineering, Inc., signed and sealed by Yiping Wang, P.E
2. Statement letter of no financial interest, dated 03/26/13, prepared by MCY Engineering, Inc., signed and sealed by Yiping Wang, P.E
3. Proposal issued by Product Control, dated 7/30/12, signed by Jaime D. Gascon, P.E.

G. OTHER

1. None.

Manuel Perez, P.E.
Product Control Examiner
NOA No. 12-1126.05
Expiration Date: June 06, 2018
Approval Date: June 06, 2013

SERIES 7000 CURTAIN WALL (SMI)

INDEX

01 DESIGN SPECIFICATION
02 SCHEDULE OF EXTRUSIONS
03 SCHEDULE OF EXTRUSIONS
04 MULTIPLE SPAN ELEVATION AND SECTIONS
05 MULTIPLE SPAN ELEVATION AND SECTIONS
06 TYP. MULLION/JAMB SECTIONS
07 MULLION/JAMB/CORNER MULLION SECTIONS
08 TYP. MULLION/JAMB/CORNER REINF. SECTION PROPERTIES
09 TYP. MULLION DETAIL
10 TYP. MULLION W/ REINF. DETAIL
11 TYP. HORIZONTAL DETAIL
12 INSIDE / OUTSIDE CORNER DETAIL
13 JAMB VERTICAL MULLION DETAIL
14 JAMB VERTICAL MULLION W/ REINF. DETAIL
15 SILL DETAIL INTO STEEL
16 SILL DETAIL INTO CONC.
17 HEAD DETAIL
18 TYP. MULLION ANCHOR TYPE A / EXP. JOINT
19 TYP. MULLION ANCHOR TYPE B / EXP. JOINT
20 TYP. MULLION ANCHOR TYPE C / EXP. JOINT
21 TYP. MULLION ANCHOR TYPE C-1 / EXP. JOINT
22 TYP. MULLION ANCHOR TYPE D / EXP. JOINT
23 TYP. JAMB ANCHOR TYPE A / EXP. JOINT
24 TYP. JAMB ANCHOR TYPE B / EXP. JOINT
25 TYP. JAMB ANCHOR TYPE C / EXP. JOINT
26 TYP. JAMB ANCHOR TYPE D / EXP. JOINT
27 INSIDE CORNER MULL. ANCHOR TYPE A OR B
28 INSIDE CORNER MULL. ANCHOR TYPE C
29 INSIDE CORNER MULL. ANCHOR TYPE D
30 OUTSIDE CORNER MULL. TO EMBED CONNECTION
31 OUTSIDE CORNER MULL. ANCHOR TYPE A OR B
32 OUTSIDE CORNER ANCHOR TYPE A EXP. JOINT
33 OUTSIDE CORNER ANCHOR TYPE A EXP. JOINT
34 OUTSIDE CORNER MULL. ANCHOR TYPE C
35 OUTSIDE CORNER ANCHOR TYPE C EXP. JOINT
36 OUTSIDE CORNER MULL. ANCHOR TYPE D
37 OUTSIDE CORNER ANCHOR TYPE D EXP. JOINT
38 BILL OF MATERIALS

MATERIALS

A. ALUMINUM:

1- ALL ALUMINUM EXTRUSION SHALL BE 6063-T5, 6063-T6 AND 6061-T6 (OR EQUIVALENT) AS SHOWN IN BILL OF MATERIAL

B. STEEL:

1- ALL STEEL FOR CURTAIN WALL SHALL BE ASTM A36 OR A50 AS PER BILL OF MATERIALS. Fy=36ksi OR Fy=50ksi
2- ALL STEEL WELDS TO BE ELECTRODE E70

C. SEALANT:

1- APPLY GE SSG 4600 ULTRAGLAZE OR DOW 983 TO SHOP APPLIED METAL TO METAL JOINERY (FRAME ASSEMBLY).

2- APPLY DOW CORNING 790 OR GE ULTRA 2700 TO EXTERIOR PERIMETER SEALANT AND FASTENER SEALANT.

3- THE GLAZING SEALANT SHALL BE GE SSG 4600 ULTRAGLAZE OR DOW 983.

4-ALL FRAME AND PANEL JOINT, INSTALLATION SCREWS AND HEADS OF ANCHOR SCREWS AT SILL TO BE SEALED WITH WHITE/ALUM COLORED SEALANT.

D. GLASS:

1- 1 5/16" INSULATED LAMINATED GLASS
1/4" TEMPERED GLASS, 7/16" AIR SPACE, 5/16" TEMPERED GLASS, 0.06 BUTACITE PVB INTERLAYER BY DUPONT, 5/16" TEMPERED GLASS.

2- 1 5/16" INSULATED LAMINATED GLASS
1/4" TEMPERED GLASS, 7/16" AIR SPACE, 1/4" TEMPERED GLASS, 0.06 BUTACITE PVB INTERLAYER BY DUPONT, 1/4" TEMPERED GLASS.

3- GLASS CAPACITY FOR A GIVEN AREA USE CHART ON SHEET 05

4-- SETTING BLOCK AT 1/4" POINT

E. FASTENERS:

1-ALL FRAME ASSEMBLY SCREWS SHALL BE:
300 SERIES COLD-ROLLED STAINLESS STEEL
Fu= 100ksi
Fy= 65ksi

GENERAL NOTES

CURTAIN WALL SYSTEM IS RATED FOR SMALL MISSILE IMPACT ONLY. SHUTTERS NOT REQUIRED FOR CURTAIN WALL SYSTEM INSTALLED 30 FT. ABOVE GROUND LEVEL.

CODE REQUIREMENTS FOR SAFEGUARDS MUST BE OBSERVED

THIS PRODUCT HAS BEEN DESIGNED AND TESTED TO COMPLY WITH THE REQUIREMENTS OF THE FLORIDA BUILDING CODE 2010 INCLUDING HIGH VELOCITY HURRICANE ZONE (HVHZ)

ANCHORS SHALL BE AS LISTED, SPACED AS SHOWN ON DETAILS, ANCHORS EMBEDMENT TO BASE MATERIAL SHALL BE BEYOND WALL DRESSING OR STUCCO

ANCHORING OR LOADING CONDITIONS NOT SHOWN IN THESE DETAILS ARE NOT PART OF THIS APPROVAL

MATERIALS INCLUDING BUT NOT LIMITED TO STEEL/METAL SCREWS, THAT COME INTO CONTACT WITH OTHER DISSIMILAR MATERIALS SHALL MEET THE REQUIREMENTS OF CURRENT FLORIDA BUILDING CODE 2010 SECTION 2003.8

EACH MEMBER SHALL BE CONTINUOUS UNLESS OTHERWISE SPECIFIED.

INSTRUCTIONS:

STEP #1:
DETERMINE DESIGN WIND LOAD REQUIREMENTS BASED ON WIND VELOCITY, BUILDING HEIGHT, AND WIND ZONE USING APPLICABLE ASCE 7 STANDARDS OR WIND TUNNEL REPORTS

STEP #2:
SEE CHART ON SHEET 5 OF 38 FOR GLASS CAPACITY OF DESIGNED GLASS AREA. AND CHOOSE SILICONE WIDTH TO MEET DESIGN LOAD.

STEP #3:
FOR MULLION, JAMB AND CORNER MULLION SEE SECTIONS ON SHEET 6 & 7 FOR A GIVEN SPAN V.S. REINFORCEMENT, SPLICE AND DESIGN LOAD.

STEP #4:
BASED ON PROJECT SUBSTRATE AND REACTION AT THE ANCHOR CHOOSE ANCHOR TYPE FOR HEAD, SILL AND INTERMEDIATE ANCHORS FROM SHEET 15 THRU SHEET 37

MAY 09 2013

Approved as complying with the Florida Building Code
Date June 6, 2013
NOA# 12-1126.08
Miami Dade Product Control
By
MIAMI DADE COUNTY

LIPING WANG, P.E.
FLORIDA REGISTRATION
PE #68433
No CA# 28677
STATE OF FLORIDA
PROFESSIONAL ENGINEER

REVISIONS		
NO.	DATE	DESCRIPTION

MCY ENGINEERING, INC.
GLAZING CONSULTANTS
8501 SW 124 AVE. SUITE 205A MIAMI, FL. 33183
P: 305.271.0117
F: 305.921.4786
www.MCYEngineering.com
MCY.Engineering@Att.net

SERIES 7000 ALUMINUM CURTAIN WALL - SMI

GLASSWALL, LLC.
3550 N.W. 49 STREET. MIAMI, FLORIDA 33142
Phone (305) 638 5151 Fax (305) 638 5158

DATE	05/09/2013
SCALE	AS NOTED
DRAWN	A.R.
PROJECT	MG12-143

DRAWING NO.
AD12-65

SHEET 01 OF 38

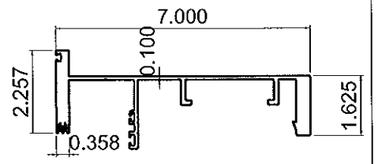

1 FEMALE MULLION
7000-101

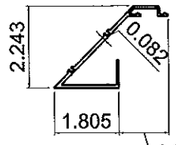

16 EXTERIOR CORNER COVER
7000-118

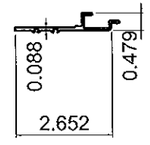

18 INTERIOR CORNER FIN
7000-121

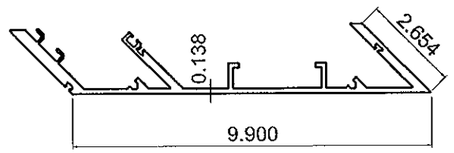

19 EXTERIOR CORNER FEMALE MULLION
7000-122

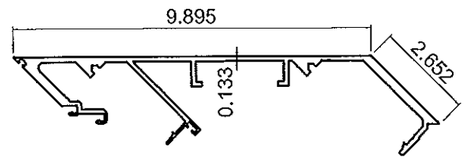

22 INTERIOR CORNER MALE MULLION
7000-125

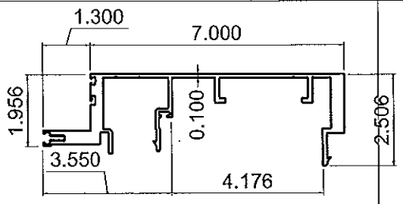

2 MALE MULLION
7000-102

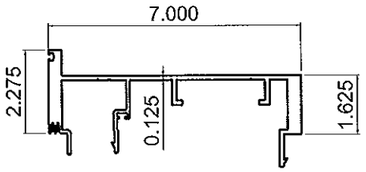

5 MALE MULLION EXTENDED LEG
7000-105

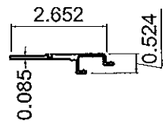

20 INTERIOR CORNER FIN
7000-123

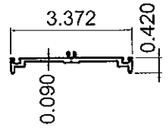

9 PRESSURE PLATE
7000-110

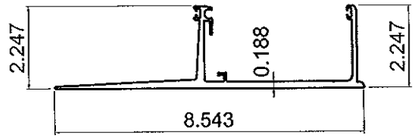

23 CHICKEN HEAD SUBSILL
7000-126

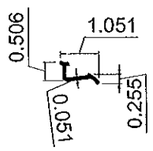

3 ANTI BUCKLING CLIP
7000-103

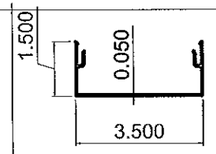

4 EXTENDED BEAUTY CAP
7000-104

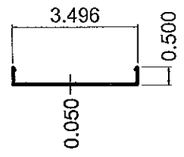

6 BEAUTY CAP
7000-107

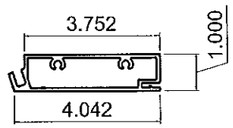

10 HORIZONTAL AT STACK JOINT
7000-112

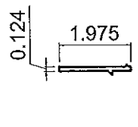

27 HORIZONTAL BUTT GLAZED FIN.
7000-130

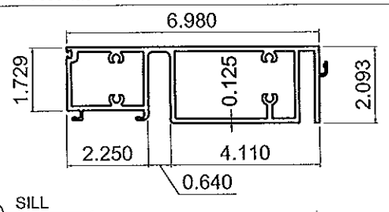

24 SILL
7000-127

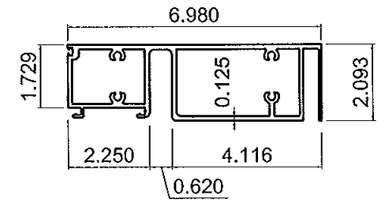

13 EXPANSION SILL
7000-115

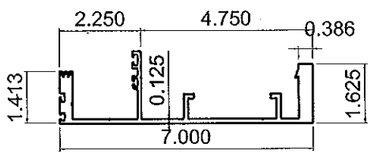

7 FEMALE MULLION BUTT GLAZED
7000-108

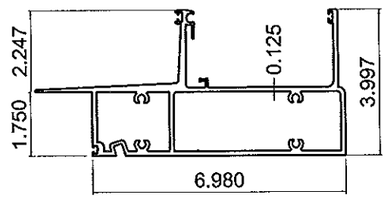

11 CHICKEN HEAD
7000-113

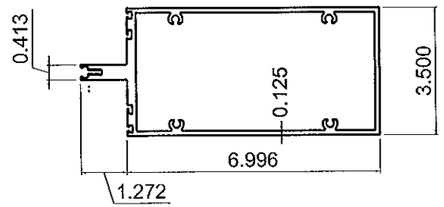

25 HORIZONTAL MULLION
7000-128

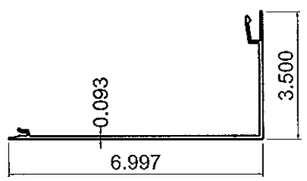

14 HEAD / SILL COVER
7000-116

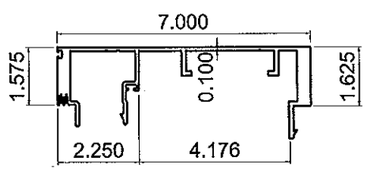

8 MALE MULLION BUTT GLAZED
7000-109

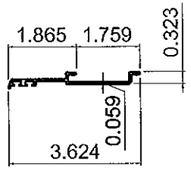

12 STACK JOINT FIN
7000-114

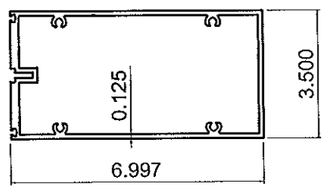

26 HORIZONTAL BUTT GLAZED
7000-129

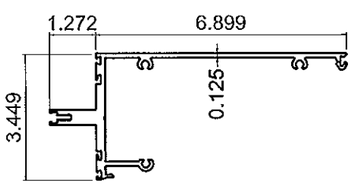

15 HEAD / SILL
7000-117

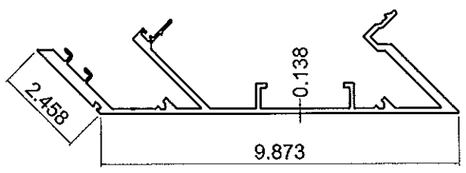

17 EXTERIOR CORNER MALE MULLION
7000-120

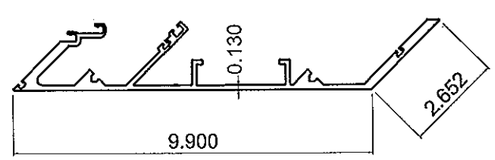

21 INTERIOR CORNER FEMALE MULLION
7000-124

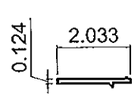

27 HORIZONTAL BUTT GLAZED FIN
W5250-206

REVISIONS		
NO.	DATE	DESCRIPTION

MCY ENGINEERING, INC.
GLAZING CONSULTANTS
8501 SW 124 AVE. SUITE 205A P: 305.271.0117
MIAMI, FL. 33183 F: 305.921.4786
www.MCYEngineering.com MCY.Engineering@Att.net

SERIES 7000 ALUMINUM CURTAIN WALL - SMI

GLASSWALL, LLC.

3550 N.W. 49 STREET. MIAMI, FLORIDA 33142
Phone (305) 638 5151 Fax (305) 638 5158

MAY 09 2013

Approved as complying with the Florida Building Code
Date: June 6, 2013
NOA# 12-1126.05
Miami Dade Product Control
By: Manuel Perez
MIAMI DADE COUNTY

YIPING WANG
LICENSE
YIPING WANG, P.E.
FLORIDA REGISTRATION
NO. 65983
C.A.N. 28677
STATE OF FLORIDA
PROFESSIONAL ENGINEER

DATE	05/09/2013
SCALE	AS NOTED
DRAWN	A.R.
PROJECT	MCY12-143

DRAWING NO.
AD12-65

SHEET 02 OF 38

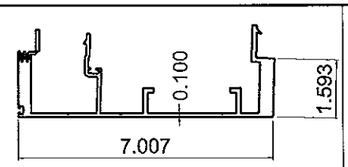

29 CRESCENT MALE MULLION
7000-132

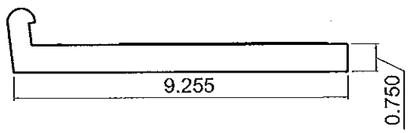

35 SLAB ANCHOR
7000-139

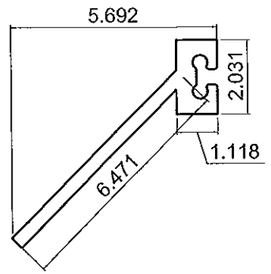

41 INSIDE CORNER ANCHOR FIST
7000-145

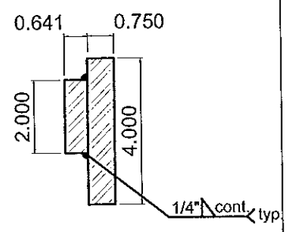

77 ST-1 (A50)
3/4" STEEL REINFORCEMENT

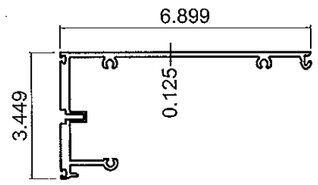

30 HEAD BUTT GLAZED
7000-133

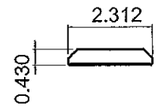

36 SERRATE WASHER
7000-140

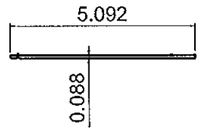

31 STACK JOINT COVER
7000-134

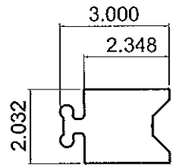

37 MULLION ANCHOR HOOK
7000-141

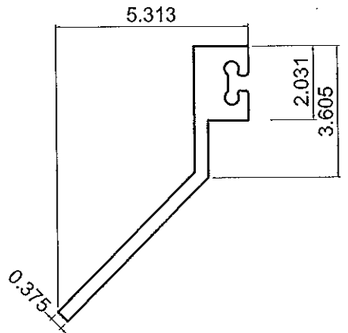

42 OUTSIDE CORNER ANCHOR FIST
7000-146

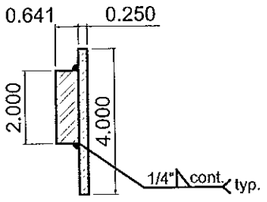

78 ST-2 (A36)
1/4" STEEL REINFORCEMENT

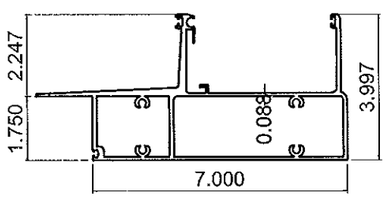

32 CHICKEN HEAD WITHOUT COVER
7000-135

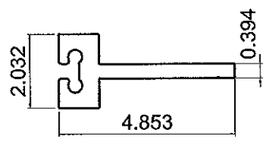

38 MULLION ANCHOR FIST
7000-142

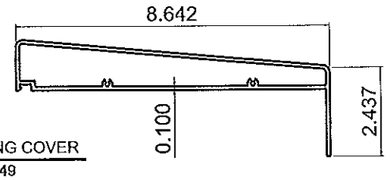

43 RAILING COVER
7000-149

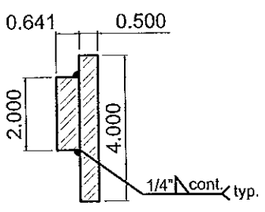

79 ST-4 (A50)
1/2" STEEL REINFORCEMENT

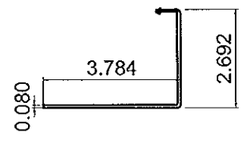

33 SILL COVER
7000-136

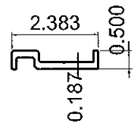

39 SPLICE AS-1
7000-143

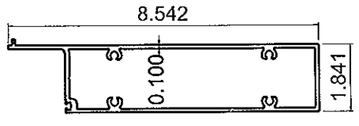

44 HORIZONTAL RAILING
7000-150

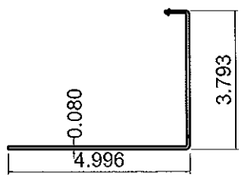

34 SILL COVER BUNGALOW
7000-137

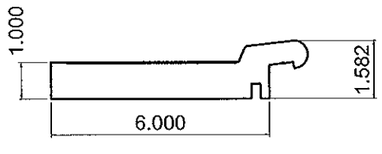

40 SHEAR ANCHOR PLATE
7000-144

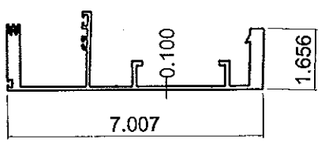

28 CRESCENT FEMALE MULLION
7000-131

REVISIONS		
NO.	DATE	DESCRIPTION

MCY ENGINEERING, INC.
GLAZING CONSULTANTS
8501 SW 124 AVE. SUITE 205A
MIAMI, FL 33183
P: 305.271.0117
F: 305.921.4786
www.MCYEngineering.com
MCY.Engineering@Att.net

SERIES 7000 ALUMINUM CURTAIN WALL - SMI

GLASSWALL, LLC.

3550 N.W. 49 STREET. MIAMI, FLORIDA 33142
Phone (305) 638 5151 Fax (305) 638 5158

MAY 09 2013

Approved as complying with the Florida Building Code
Date June 6, 2013
NOA# 12-1126.05
Miami Dade Product Control
By
MIAMI DADE COUNTY

YIPING WANG
STATE OF FLORIDA
PROFESSIONAL ENGINEER
YIPING WANG, P.E.
FLORIDA REGISTRATION
PE #55903
C.O.A.# 28677

DATE	05/09/2013
SCALE	AS NOTED
DRAWN	A.R.
PROJECT	MCY12-143

DRAWING NO.
AD12-65

SHEET 03 OF 38

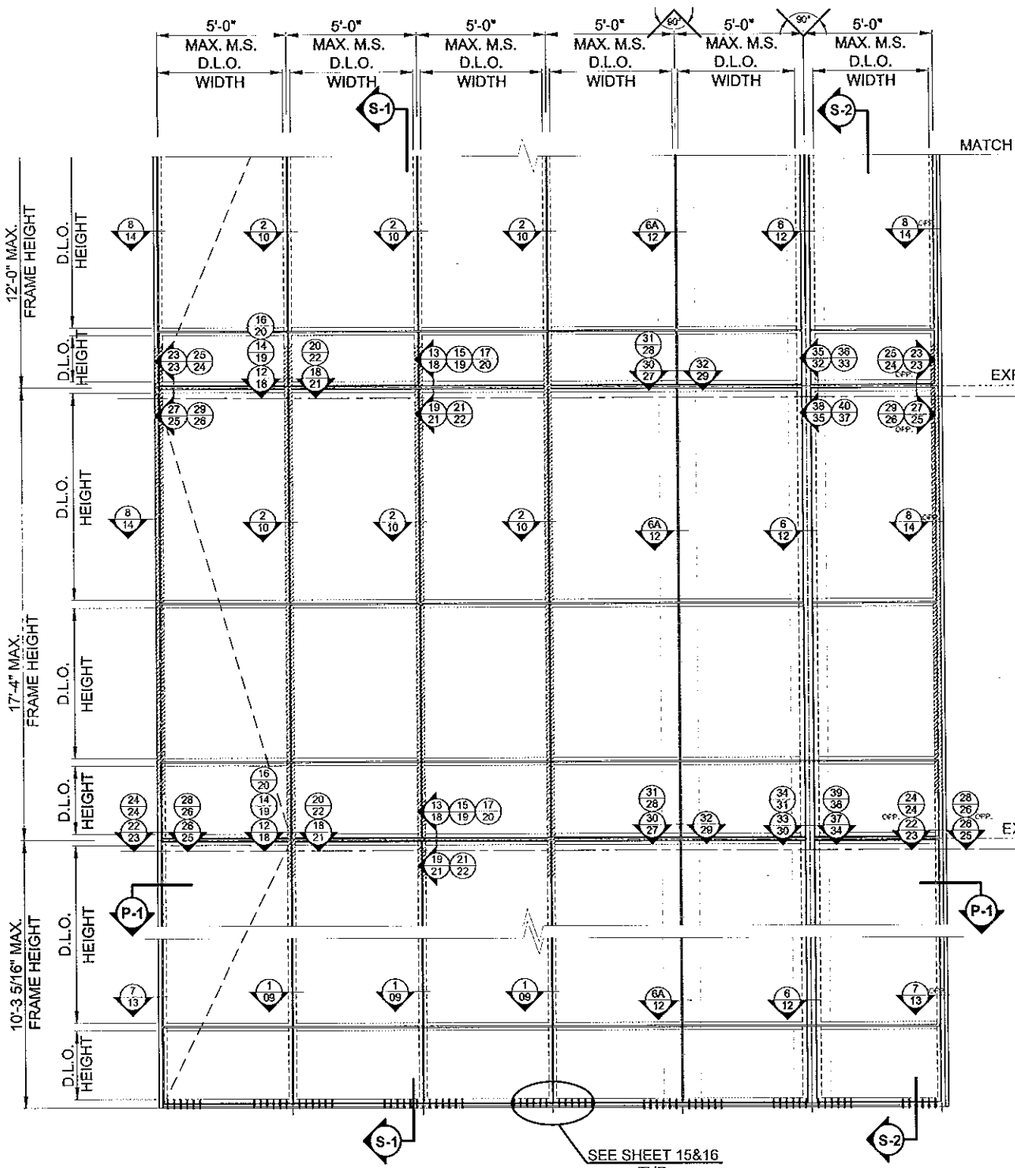

MULTIPLE SPAN ELEVATION - CURTAIN WALL
(THREE SPAN MIN.)

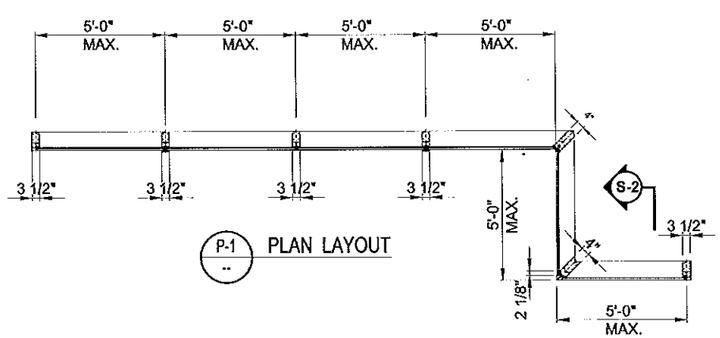

P-1 PLAN LAYOUT

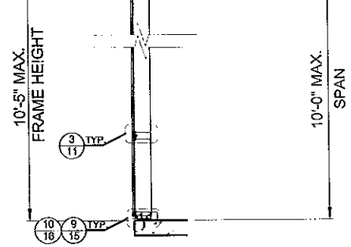

S-1 SECTION 1

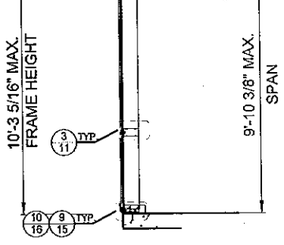

S-2 SECTION 2

ABBREVIATIONS

M.S. = MULLION SPACING CENTER TO CENTER
S.W. = SILICONE WIDTH
D.L.O. = DAYLIGHT OPENING
Pd = DESIGN LOAD (PSF)
℄ = CENTER LINE

REVISIONS		
NO.	DATE	DESCRIPTION

MCY ENGINEERING, INC.
GLAZING CONSULTANTS
8501 SW 124 AVE. SUITE 205A
MIAMI, FL 33183
P: 305.271.0117
F: 305.921.4786
www.MCYEngineering.com
MCY.Engineering@Att.net

SERIES 7000 ALUMINUM CURTAIN WALL - SMI

GLASSWALL, LLC.
3550 N.W. 49 STREET. MIAMI, FLORIDA 33142
Phone (305) 638 5151 Fax (305) 638 5158

MAY 09 2013

Approved as complying with the Florida Building Code
Date June 6, 2013
NOA# 12-1126.05
Miami Dade Product Control
By
MIAMI DADE COUNTY

YIPING WANG LICENSE
YIPING WANG, P.E.
FLORIDA REGISTRATION
PE #55983
C.A.N. 28677
STATE OF FLORIDA
PROFESSIONAL ENGINEER

DATE	05/09/2013
SCALE	AS NOTED
DRAWN	A.R.
PROJECT	MCY12-143

DRAWING NO.
AD12-65

SHEET 04 OF 38

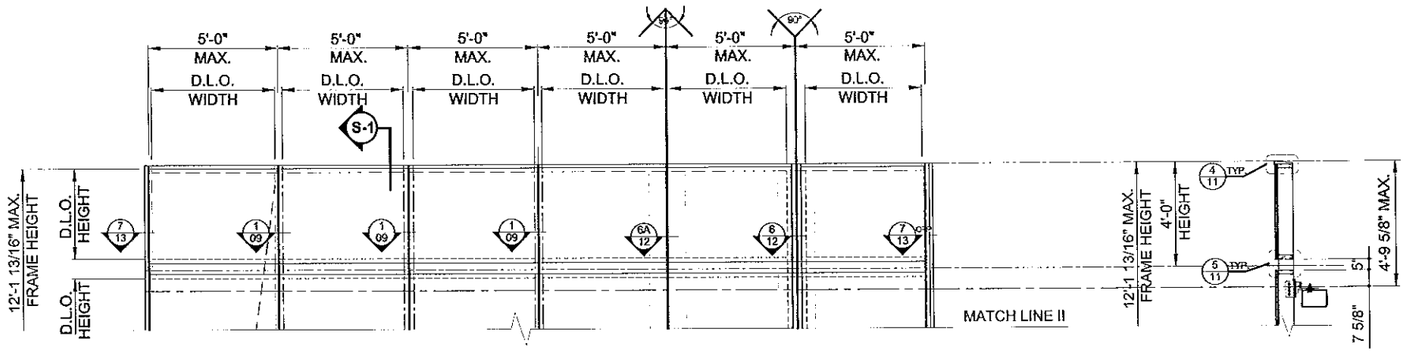

TOP CURTAIN WALL CANTILEVER OPTION

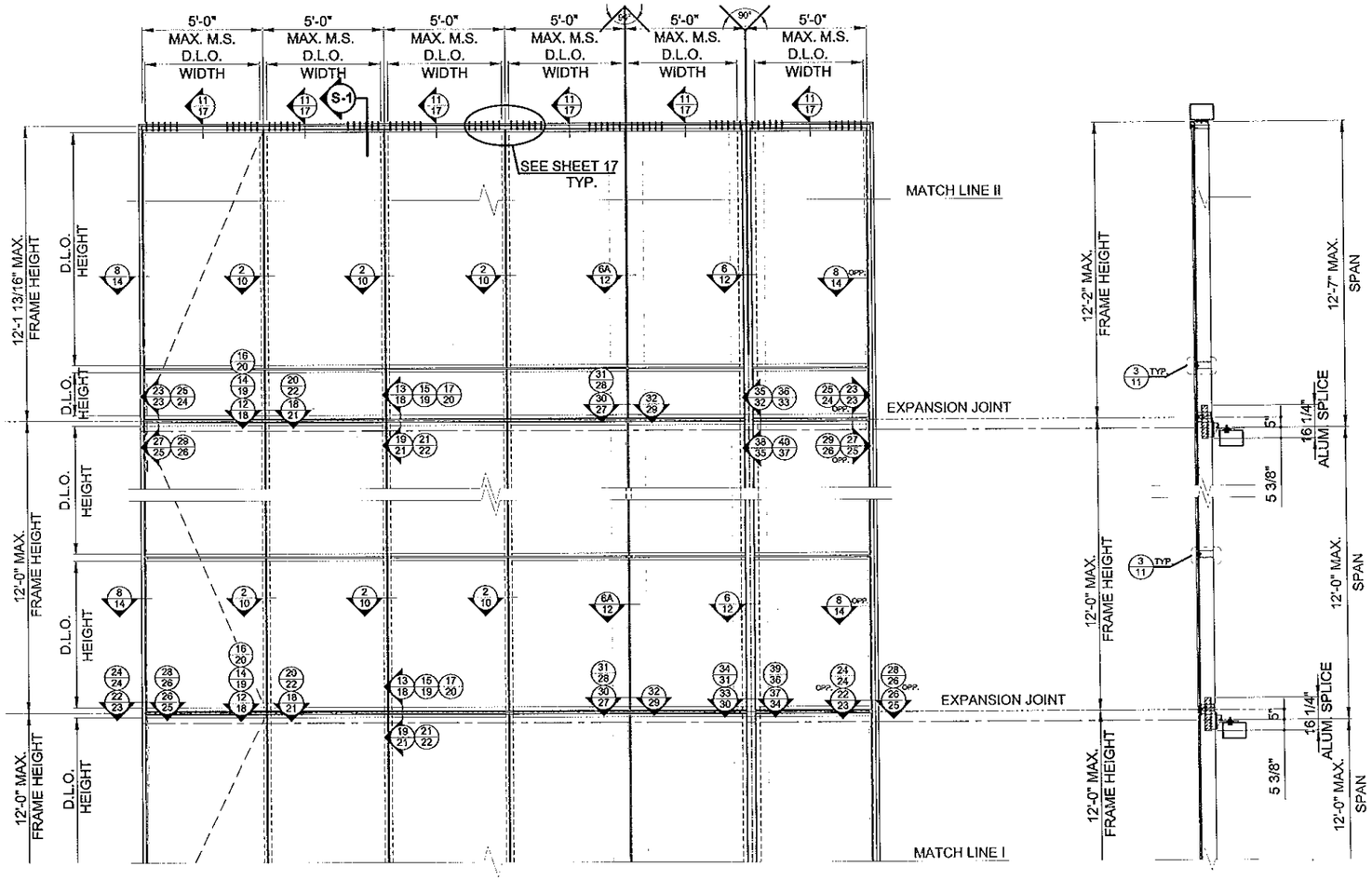

MULTIPLE SPAN ELEVATION - CURTAIN WALL

S-1 SECTION 1

GLAZING OPTIONS

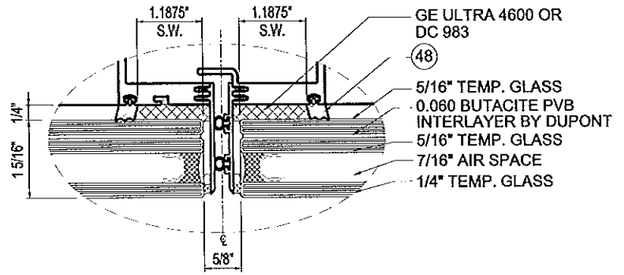

GLASS TYPE B
SILICONE WIDTH = 1.1875"

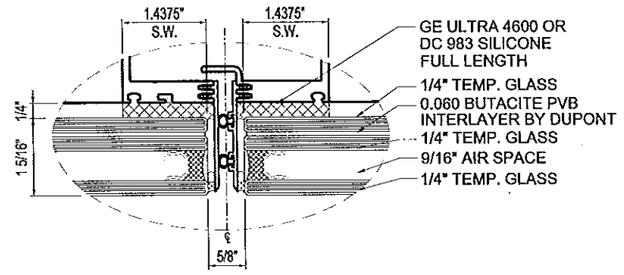

GLASS TYPE C
SILICONE WIDTH = 1.4375"

NOTE = SILICONE WIDTH OPTIONS ARE INTERCHANGEABLE FOR BOTH GLASS TYPE B AND TYPE C

DESIGN LOAD Pd (PSF) DUE TO SILICONE		
MULLION SPACING (M.S.)	MIN. SILICONE WIDTH (S.W.)	
	1.1875 "	1.4375 "
5'-0"	114 PSF	140 PSF
4'-6"	126.7 PSF	140 PSF
4'-0"	140 PSF	140 PSF

GLASS "TYPE A" CAPACITY (PSF.)	
GLASS AREA (FT²)	+ 100 PSF - 140 PSF
45.9	

**GLASS AREA = D.L.O. WIDTH * D.L.O. HEIGHT

GLASS CAPACITY BASED ON ASTM E 1300-04

MAY 09 2013

Approved as complying with the Florida Building Code
Date June 6, 2013
NOA# 12-1126.05
Miami Dade Product Control
By
MIAMI DADE COUNTY

YIPING WANG
STATE OF FLORIDA
PROFESSIONAL ENGINEER
YIPING WANG, PE
FLORIDA REGISTRATION
PE #55983
C.O.A.N. 28674

REVISIONS		
NO.	DATE	DESCRIPTION

MCY ENGINEERING, INC.
GLAZING CONSULTANTS
8501 SW 124 AVE. SUITE 205A
MIAMI, FL. 33183
P: 305.271.0117
F: 305.921.4786
www.MCYEngineering.com
MCY.Engineering@Att.net

SERIES 7000 ALUMINUM CURTAIN WALL - SMI

GLASSWALL, LLC.

3550 N.W. 49 STREET. MIAMI, FLORIDA 33142
Phone (305) 638 5151 Fax (305) 638 5158

DATE	05/09/2013
SCALE	AS NOTED
DRAWN	A.R.
PROJECT	MCY12-143

DRAWING NO.
AD12-65

SHEET 05 OF 38

TYP. MULLION/JAMB SECTIONS W/ OR W/O REINFORCEMENT

NOTE: REFER TO SHEET 8 FOR MULLION SECTIONS & PROPERTIES

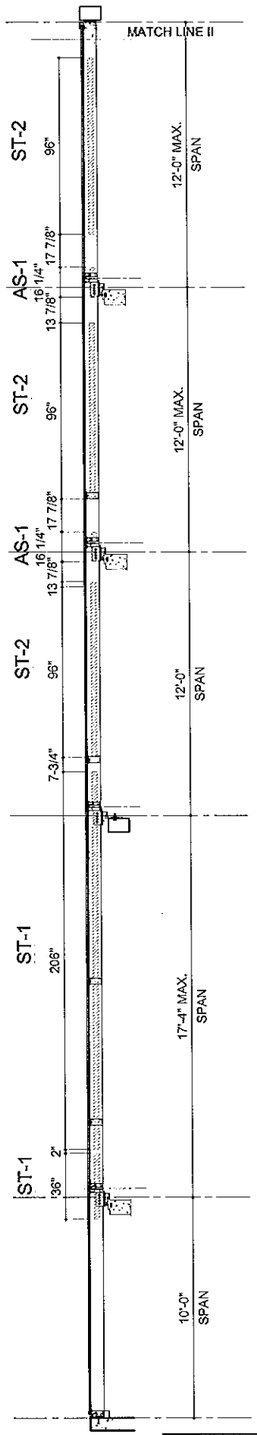

CASE 1

MAX. DESIGN LOAD
+ 100 PSF
- 140 PSF

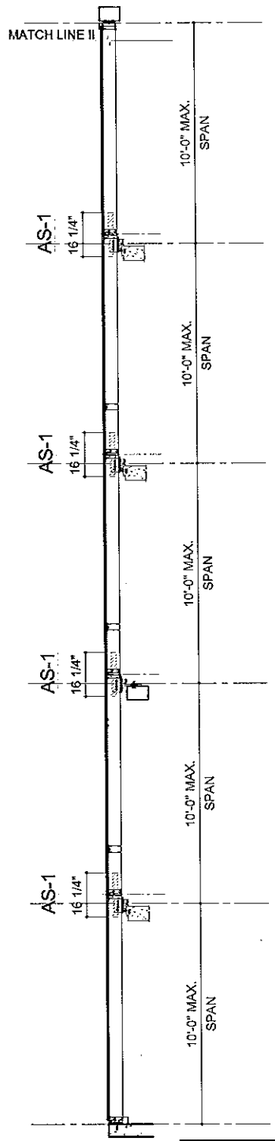

CASE 2

MAX. DESIGN LOAD
+ 100 PSF
- 140 PSF

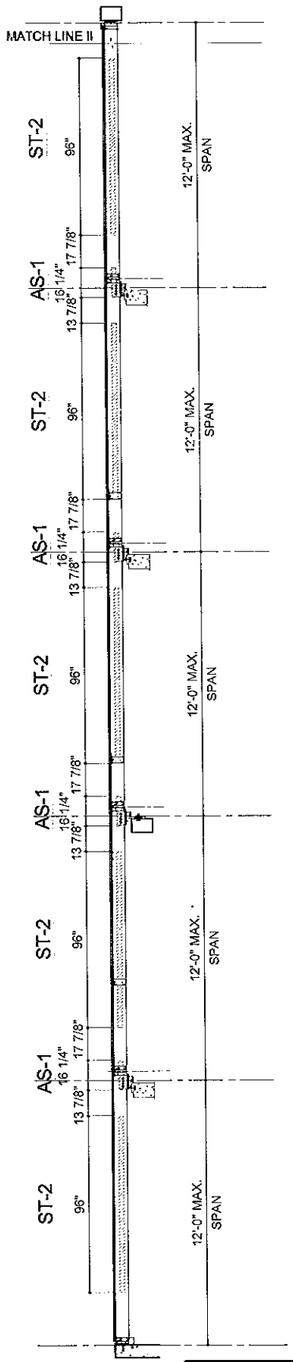

CASE 3

MAX. DESIGN LOAD
+ 100 PSF
- 140 PSF

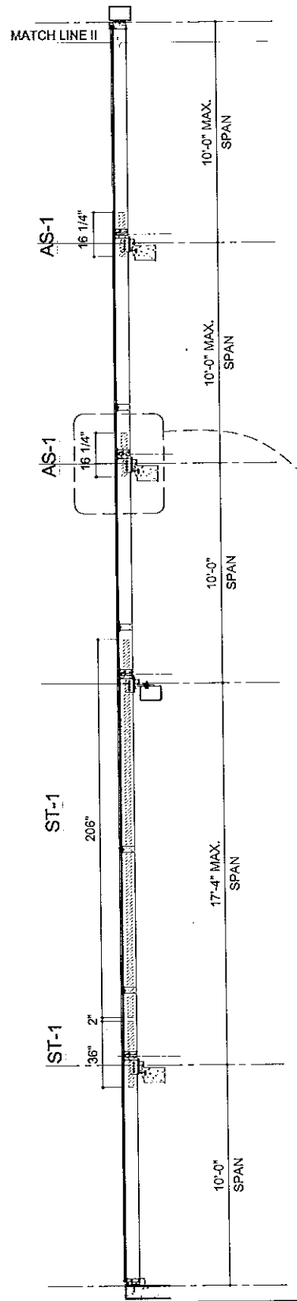

CASE 4

MAX. DESIGN LOAD
+ 100 PSF
- 140 PSF

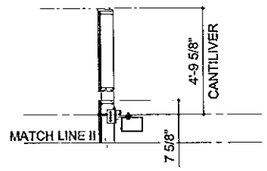

CASE 1 THRU CASE 6
W/ CANTILEVER

MAX. DESIGN LOAD
+ 100 PSF
- 140 PSF

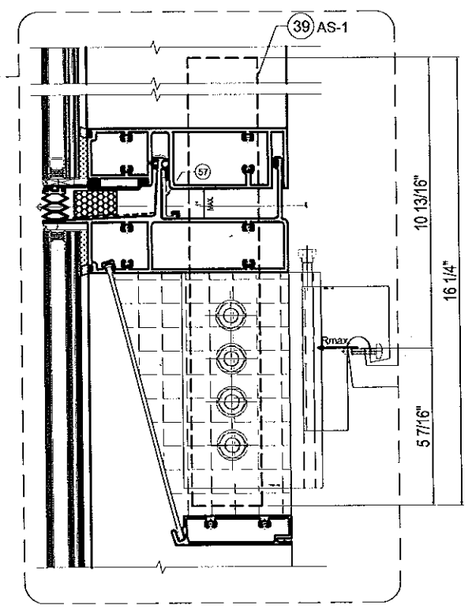

SPLICE DETAIL TYPICAL
AS-1

MAY 0 9 2013

Approved as complying with the Florida Building Code
Date June 6, 2013
NOA# 12-1126.05
Miami Dade Product Control
By Manuel Perez
MIAMI DADE COUNTY

YIPING WANG, P.E.
FLORIDA REGISTRATION
PE #55983
C.A.N. 23677
STATE OF FLORIDA

REVISIONS

NO.	DATE	DESCRIPTION

MCY ENGINEERING, INC.
GLAZING CONSULTANTS
8501 SW 124 AVE. SUITE 205A
MIAMI, FL 33183
P: 305.271.0117
F: 305.921.4786
www.MCYEngineering.com
MCY.Engineering@Att.net

SERIES 7000 ALUMINUM CURTAIN WALL - SMI

GLASSWALL, LLC.
3550 N.W. 49 STREET, MIAMI, FLORIDA 33142
Phone (305) 638 5151 Fax (305) 638 5158

DATE	05/09/2013
SCALE	AS NOTED
DRAWN	A.R.
PROJECT	MCY12-143

DRAWING NO.
AD12-65

TYP. MULLION/JAMB SECTIONS W/ OR W/O REINFORCEMENT

NOTE: REFER TO SHEET 8 FOR MULLION SECTIONS & PROPERTIES

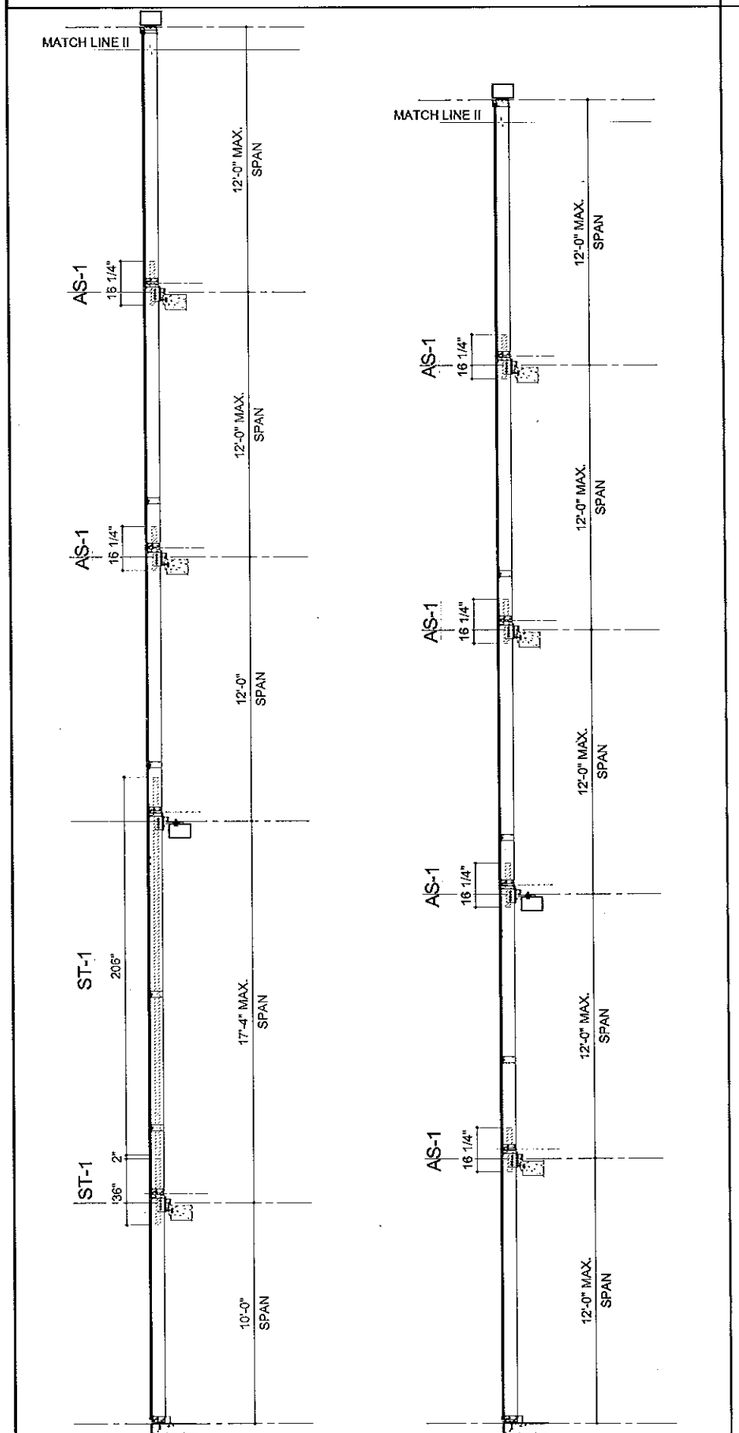

CASE 1.2

MAX. DESIGN LOAD
+ 100 PSF
- 122 PSF

CASE 3.1

MAX. DESIGN LOAD
+ 100 PSF
- 124 PSF

CORNER MULLION SECTION W/ OR W/O REINFORCEMENT

NOTE: REFER TO SHEET 8 FOR MULLION SECTIONS & PROPERTIES

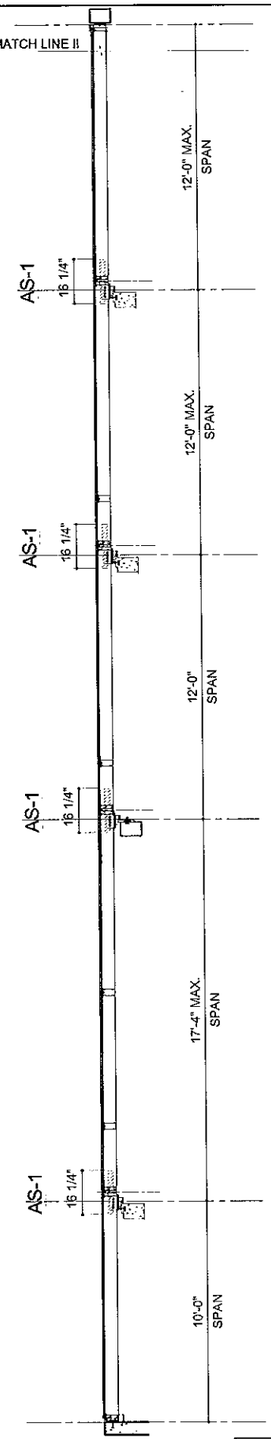

CASE 5
INSIDE / OUTSIDE CORNER MULLION.

MAX. DESIGN LOAD
+ 100 PSF
- 140 PSF

W1*PD1 = W2 *PD2 = W3*PD3

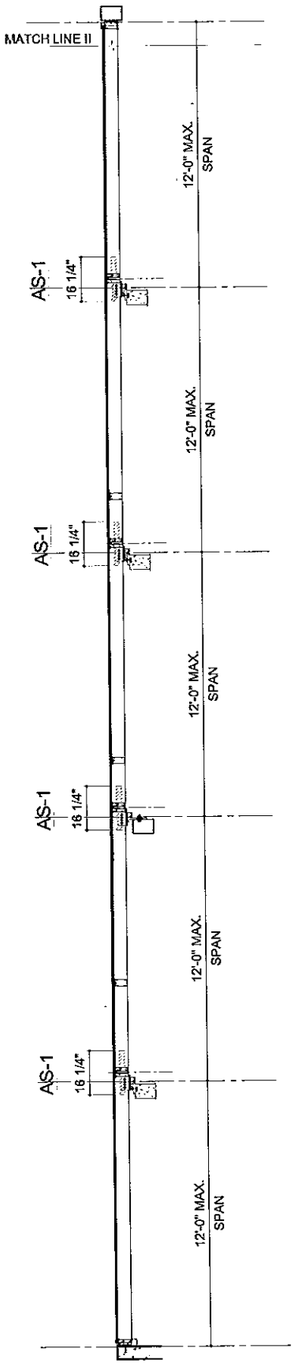

CASE 6
INSIDE / OUTSIDE CORNER MULLION.

MAX. DESIGN LOAD
+ 100 PSF
- 140 PSF

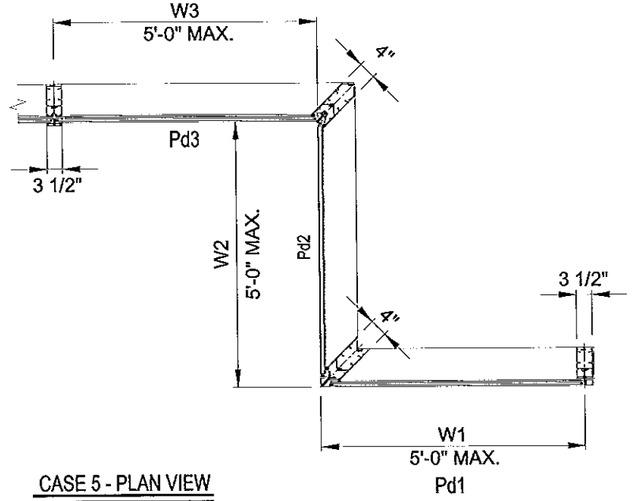

CASE 5 - PLAN VIEW

W1*Pd1 = W2 *Pd2 = W3*Pd3

NOTE:
FOR W1*Pd1 ≠ W2 *Pd2 ≠ W3*Pd3
SEPARTE ENGINEERING CALCULATIONS FOR REINFORCEMENTS ARE REQUIRED BASED ON EACH PROJECT CONDITION

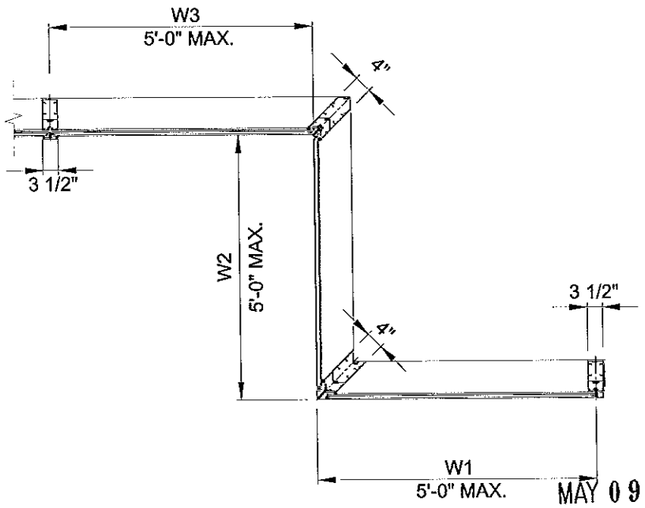

CASE 6 - PLAN VIEW

MAY 09 2013

Approved as complying with fl
Florida Building Code
Date June 6, 2013
NOA# 12-1128.05
Miami Dade Product Control
By
MIAMI DADE COUNTY

YIPING WANG, P.E.
FLORIDA REGISTRATION
PE #55983
C.A.N. 28675

STATE OF FLORIDA PROFESSIONAL ENGINEER

REVISIONS		
NO.	DATE	DESCRIPTION

MCY ENGINEERING, INC.
GLAZING CONSULTANTS
8501 SW 124 AVE. SUITE 205A MIAMI, FL 33183
P: 305.271.0117
F: 305.921.4786
www.MCYEngineering.com
MCY.Engineering@Att.net

SERIES 7000 ALUMINUM CURTAIN WALL - SMI

GLASSWALL, LLC.

3550 N.W. 49 STREET. MIAMI, FLORIDA 33142
Phone (305) 638 5151 Fax (305) 638 5158

DATE	05/09/2013
SCALE	AS NOTED
DRAWN	A.R.
PROJECT	MCY12-143

DRAWING NO.
AD12-65

TYP. MULLION W/ OR W/O REINF. OPTIONS

STRUCTURAL BUTT GLAZED STRAIGHT MULLION

MULLION W/O REINF.	Ix in^4	Sx in^3
ALUM. (7000-109 + 7000-108)	33.4176	8.9666

MULLION W/ ST-1	Ix in^4	Sx in^3
ALUM. (7000-109 + 7000-108)	33.4176	8.9666
2 * ST-1	9.2210	4.3132
TOTAL Ix Al + Ix St*(2.9)	60.1585	--

MULLION W/ ST-2	Ix in^4	Sx in^3
ALUM. (7000-109 + 7000-108)	33.4176	8.9666
2 * ST-2	3.7440	1.6600
TOTAL Ix Al + Ix St*(2.9)	44.2752	--

MULLION W/ ST-4	Ix in^4	Sx in^3
ALUM. (7000-109 + 7000-108)	33.4176	8.9666
2 * ST-4	6.5046	2.9832
TOTAL Ix Al + Ix St*(2.9)	52.2809	--

STRUCTURAL BUTT GLAZED CURVED MULLION

MULLION W/O REINF.	Ix in^4	Sx in^3
ALUM. (7000-131 + 7000-109)	34.7709	9.4261

MULLION W/ ST-1	Ix in^4	Sx in^3
ALUM. (7000-131 + 7000-109)	34.7709	9.4261
2 * ST-1	9.2210	4.3132
TOTAL Ix Al + Ix St*(2.9)	61.5089	--

MULLION W/ ST-2	Ix in^4	Sx in^3
ALUM. (7000-131 + 7000-109)	34.7709	9.4261
2 * ST-2	3.7440	1.6600
TOTAL Ix Al + Ix St*(2.9)	45.6285	--

MULLION W/ ST-4	Ix in^4	Sx in^3
ALUM. (7000-131 + 7000-109)	34.7709	9.4261
2 * ST-4	6.5046	2.9832
TOTAL Ix Al + Ix St*(2.9)	53.6342	--

STRUCTURAL CAPPED GLAZED STRAIGHT MULLION

	Ix in^4	Sx in^3
ALUM. (7000-108 + 7000-102)	40.5240	9.3870

	Ix in^4	Sx in^3
ALUM. (7000-102 + 7000-108)	40.5240	9.3870
2 * ST-1	9.2210	4.3132
TOTAL Ix Al + Ix St*(2.9)	67.2620	--

	Ix in^4	Sx in^3
ALUM. (7000-102 + 7000-108)	40.5240	9.3870
2 * ST-2	3.7440	1.6600
TOTAL Ix Al + Ix St*(2.9)	51.3816	--

	Ix in^4	Sx in^3
ALUM. (7000-102 + 7000-108)	40.5240	9.3870
2 * ST-4	6.5046	2.9832
TOTAL Ix Al + Ix St*(2.9)	59.3873	--

TYP. JAMB W/ OR W/O REINF. OPTIONS

STRUCTURAL BUTT GLAZED STRAIGHT JAMB

JAMB W/O REINF.	Ix in^4	Sx in^3
ALUM. (7000-109 + 7000-108)	33.4176	8.9666

JAMB W/ ST-1	Ix in^4	Sx in^3
ALUM. (7000-109 + 7000-108)	33.4176	8.9666
1 * ST-1	4.6105	2.1566
TOTAL Ix Al + Ix St*(2.9)	46.7881	--

JAMB W/ ST-2	Ix in^4	Sx in^3
ALUM. (7000-109 + 7000-108)	33.4176	8.9666
1 * ST-2	1.8720	0.8300
TOTAL Ix Al + Ix St*(2.9)	38.8464	--

JAMB W/ ST-4	Ix in^4	Sx in^3
ALUM. (7000-109 + 7000-108)	33.4176	8.9666
1* ST-4	3.2523	1.4916
TOTAL Ix Al + Ix St*(2.9)	42.8492	--

STRUCTURAL BUTT GLAZED CURVED JAMB

	Ix in^4	Sx in^3
ALUM. (7000-131 + 7000-132)	35.9366	9.7389

	Ix in^4	Sx in^3
ALUM. (7000-131 + 7000-132)	35.9366	9.7389
1 * ST-1	4.6105	2.1566
TOTAL Ix Al + Ix St*(2.9)	49.3071	--

	Ix in^4	Sx in^3
ALUM. (7000-131 + 7000-132)	35.9366	9.7389
1 * ST-2	1.8720	0.8300
TOTAL Ix Al + Ix St*(2.9)	41.3654	--

	Ix in^4	Sx in^3
ALUM. (7000-131 + 7000-132)	35.9366	9.7389
1 * ST-4	3.2523	1.4916
TOTAL Ix Al + Ix St*(2.9)	45.3682	--

STRUCTURAL CAPPED GLAZED STRAIGHT JAMB

	Ix in^4	Sx in^3
ALUM. (7000-108 + 7000-102)	40.5240	9.3870

	Ix in^4	Sx in^3
ALUM. (7000-102 + 7000-108)	40.5240	9.3870
2 * ST-1	9.2210	4.3132
TOTAL Ix Al + Ix St*(2.9)	67.2620	--

	Ix in^4	Sx in^3
ALUM. (7000-102 + 7000-108)	40.5240	9.3870
2 * ST-2	3.7440	1.6600
TOTAL Ix Al + Ix St*(2.9)	51.3816	--

	Ix in^4	Sx in^3
ALUM. (7000-102 + 7000-108)	40.5240	9.3870
2 * ST-4	6.5046	2.9832
TOTAL Ix Al + Ix St*(2.9)	59.3873	--

90° INSIDE OR OUTSIDE CORNER MULLION OPTIONS

STRUCTURAL GLAZED CORNER MULLIONS

OUTSIDE CORNER MULLION W/O REINF.

	Ix in^4	Sx in^3
ALUM. (7000-120 + 7000-122)	98.2386	16.7443

INSIDE CORNER MULLION W/O REINF.

	Ix in^4	Sx in^3
ALUM. (7000-124 + 7000-125)	90.4431	14.0658

OUTSIDE CORNER MULLION W/O REINF.

	Ix in^4	Sx in^3
ALUM. (7000-120 + 7000-122) X-Direction	49.8868	10.3160
ALUM. (7000-120 + 7000-122) Y-Direction	50.8132	10.363

INSIDE CORNER MULLION W/O REINF.

	Ix in^4	Sx in^3
ALUM. (7000-124 + 7000-125) X-Direction	47.9395	9.2154
ALUM. (7000-124 + 7000-125) Y-Direction	45.1515	8.205

REINFORCEMENT OPTIONS

0.641 x 0.750, 2.000, 4.000, 1/4" cont. typ.
(77) ST-1 (A50) 3/4" STEEL REINFORCEMENT

0.641 x 0.250, 2.000, 4.000, 1/4" cont. typ.
(78) ST-2 (A36) 1/4" STEEL REINFORCEMENT

0.641 x 0.500, 2.000, 4.000, 1/4" cont. typ.
(79) ST-4 (A50) 1/2" STEEL REINFORCEMENT

2.383 x 0.500, 0.187
(39) SPLICE AS-1 7000-143

Approved as complying with the Florida Building Code
Date June 6, 2013
NOA# 12-1126.05
Miami Dade Product Control
By Manuel Perez
MIAMI DADE COUNTY

YIPING WANG, P.E.
FLORIDA REGISTRATION
PE #55983
C.A.N. 28677
No 55983
STATE OF FLORIDA
PROFESSIONAL ENGINEER

REVISIONS

NO.	DATE	DESCRIPTION

MCY ENGINEERING, INC.
GLAZING CONSULTANTS
8501 SW 124 AVE. SUITE 205A
MIAMI, FL. 33183
P: 305.271.0117
F: 305.921.4786
www.MCYEngineering.com
MCY.Engineering@Att.net

SERIES 7000 ALUMINUM CURTAIN WALL - SMI

GLASSWALL, LLC.

3550 N.W. 49 STREET. MIAMI, FLORIDA 33142
Phone (305) 638 5151 Fax (305) 638 5158

DATE	05/09/2013
SCALE	AS NOTED
DRAWN	A.R.
PROJECT	MCY12-143
DRAWING NO.	AD12-65
SHEET	08 OF 38

MAY 09 2013

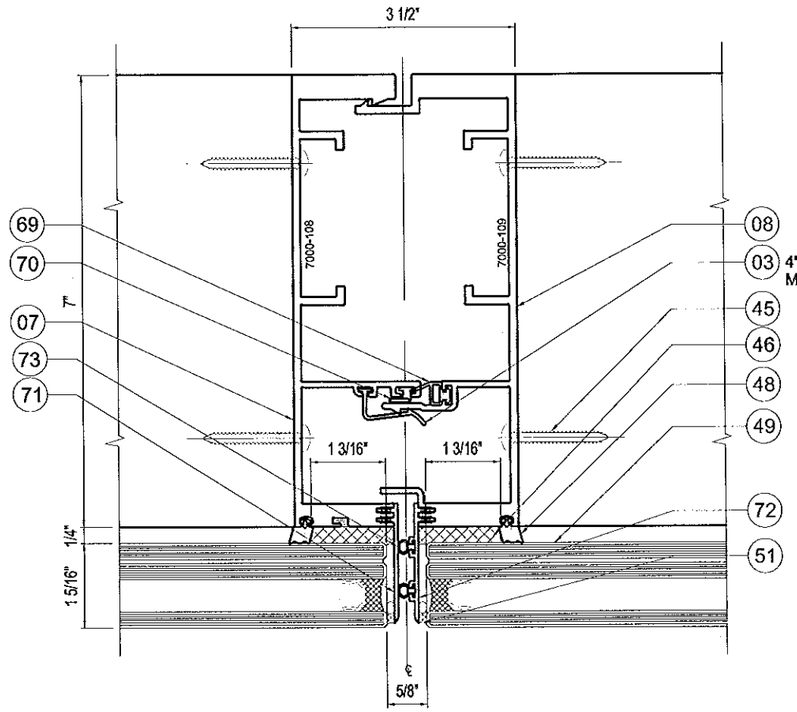

1/09 TYP. MULLION BUTT GLAZED OPTION 1

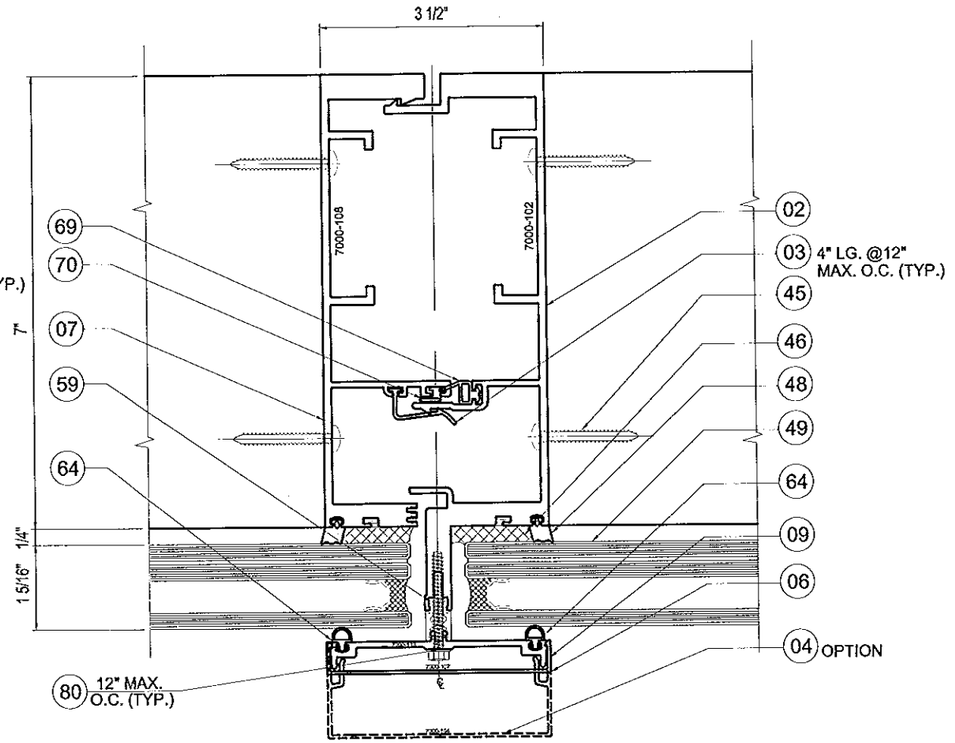

1/09 TYP. MULLION CAPTURED OPTION 2

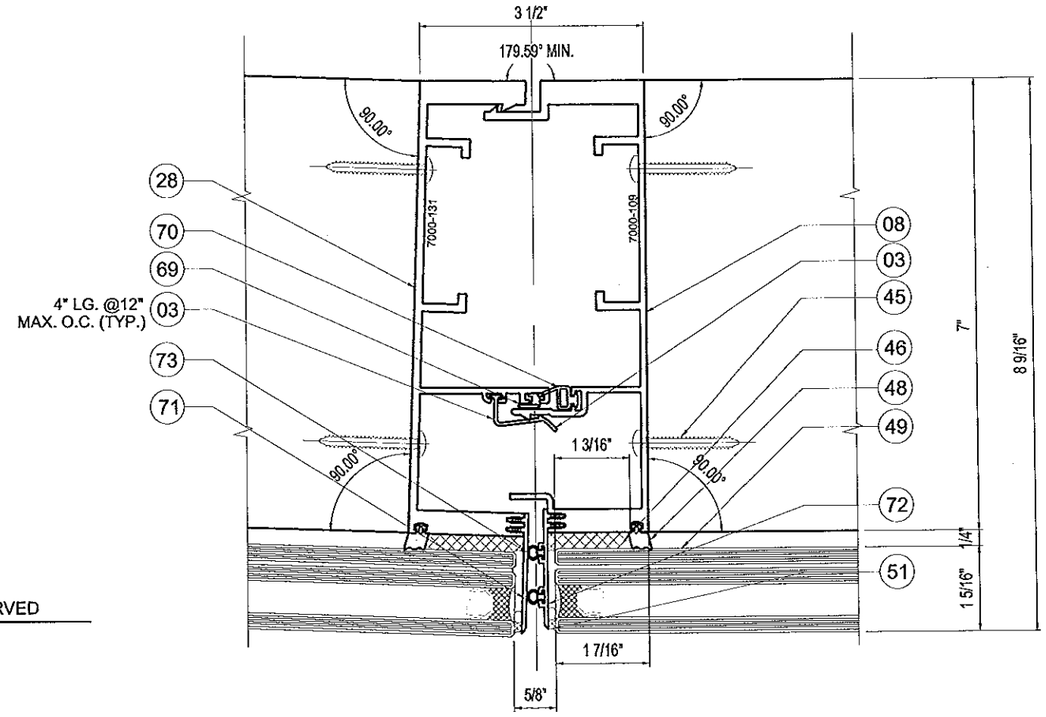

1/09 TYP. MULLION CURVED OPTION 3

MAY 09 2013

Approved as complying with the Florida Building Code
Date June 10, 2013
NOA# 12-1226.05
Miami Dade Product Control
By
MIAMI DADE COUNTY

YIPING WANG, P.E.
FLORIDA REGISTRATION NO #55983
C.A.N. 28677
STATE OF FLORIDA
PROFESSIONAL ENGINEER

REVISIONS		
NO.	DATE	DESCRIPTION

MCY ENGINEERING, INC.
GLAZING CONSULTANTS
8501 SW 124 AVE. SUITE 205A
MIAMI, FL 33183
P: 305.271.0117
F: 305.921.4786
www.MCYEngineering.com
MCY.Engineering@Att.net

SERIES 7000 ALUMINUM CURTAIN WALL - SMI

GLASSWALL, LLC.
3550 N.W. 49 STREET, MIAMI, FLORIDA 33142
Phone (305) 638 5151 Fax (305) 638 5158

DATE	05/09/2013
SCALE	AS NOTED
DRAWN	A.R.
PROJECT	MCY12-143

DRAWING NO. AD12-65

SHEET 09 OF 38

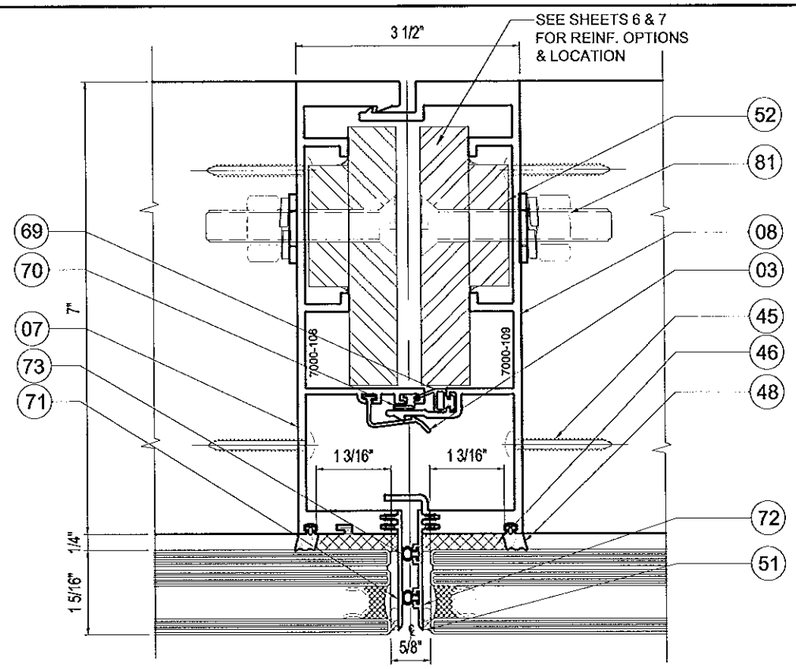

2/10 TYP. MULLION BUTT GLAZED W/ REINF.
OPTION 1

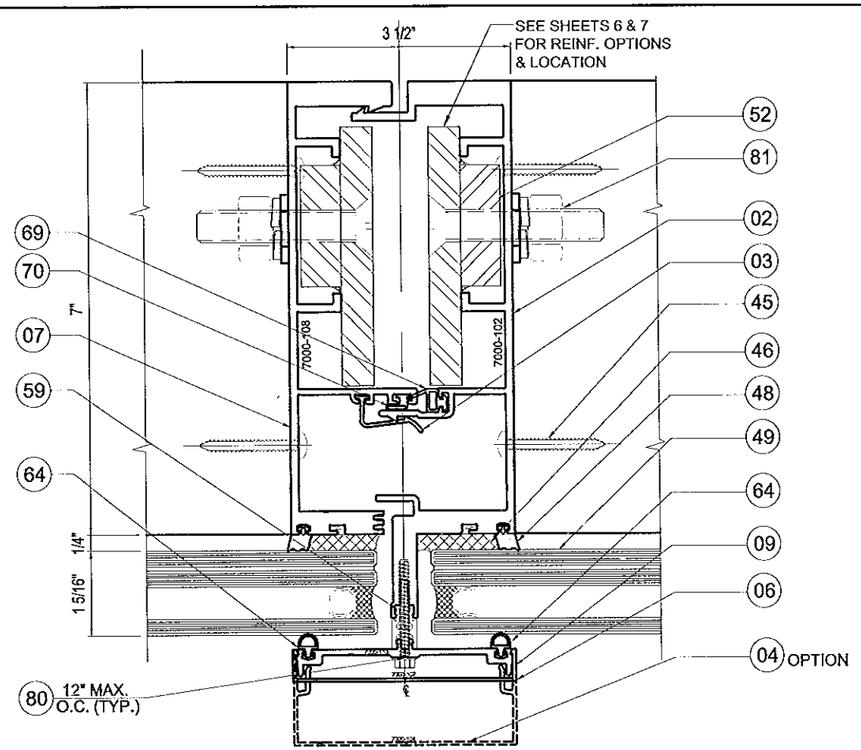

2/10 TYP. MULLION CAPTURED W/ REINF.
OPTION 2

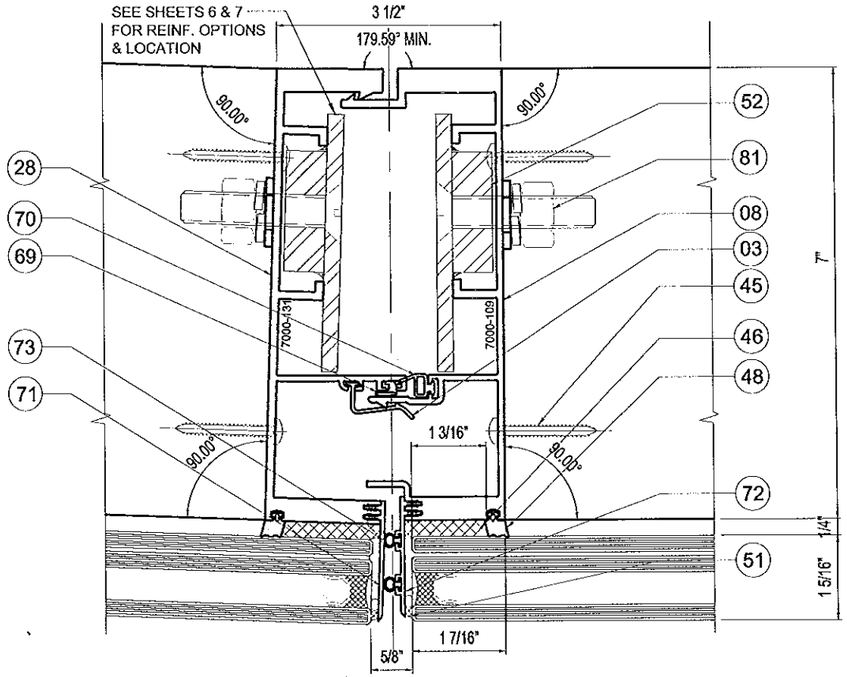

2/10 TYP. MULLION CURVED W/ REINF.
OPTION 3

NOTE:
REFER TO SHEETS 6 & 7 FOR TYP. MULLION SPANS V.S. REINFORCEMENT AND MAX. DESIGN LOAD.

MAY 09 2013

Approved as complying with the Florida Building Code
Date June 6, 2013
NOA# 12-1126.05
Miami Dade Product Control
By Manuel Perez
MIAMI DADE COUNTY

VIPING WANG LICENSE
VIPING WANG, P.E.
FLORIDA REGISTRATION NO. 55983
PE #55983
C.A.N. 28677
STATE OF FLORIDA

REVISIONS		
NO.	DATE	DESCRIPTION

MCY ENGINEERING, INC.
GLAZING CONSULTANTS
8501 SW 124 AVE. SUITE 205A MIAMI, FL 33183
P: 305.271.0117
F: 305.921.4786
www.MCYEngineering.com
MCY.Engineering@Att.net

SERIES 7000 ALUMINUM CURTAIN WALL - SMI

GLASSWALL, LLC.
3550 N.W. 49 STREET. MIAMI, FLORIDA 33142
Phone (305) 638 5151 Fax (305) 638 5158

DATE	05/09/2013
SCALE	AS NOTED
DRAWN	A.R.
PROJECT	MCY12-143

DRAWING NO.
AD12-65

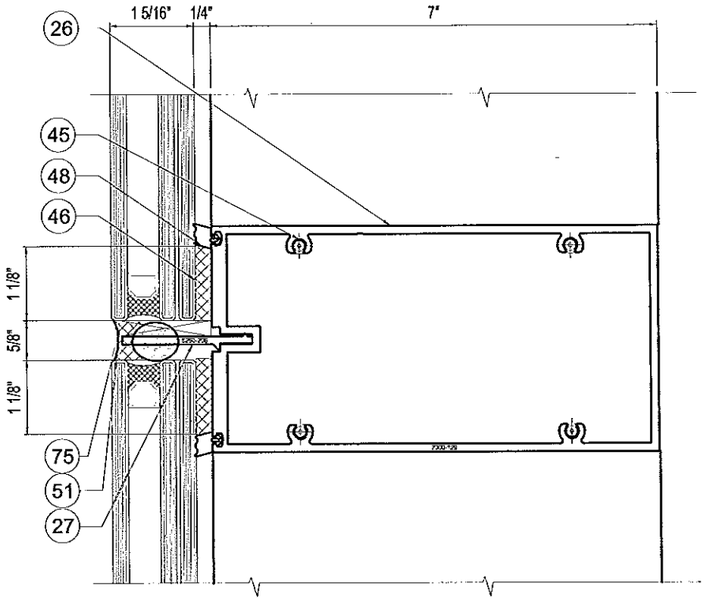

3/11 HORIZONTAL BUTT GLAZED OPTION 1

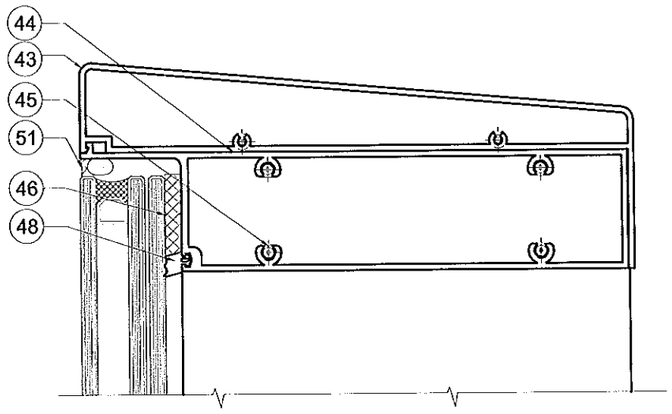

4/11 PARAPET HEAD

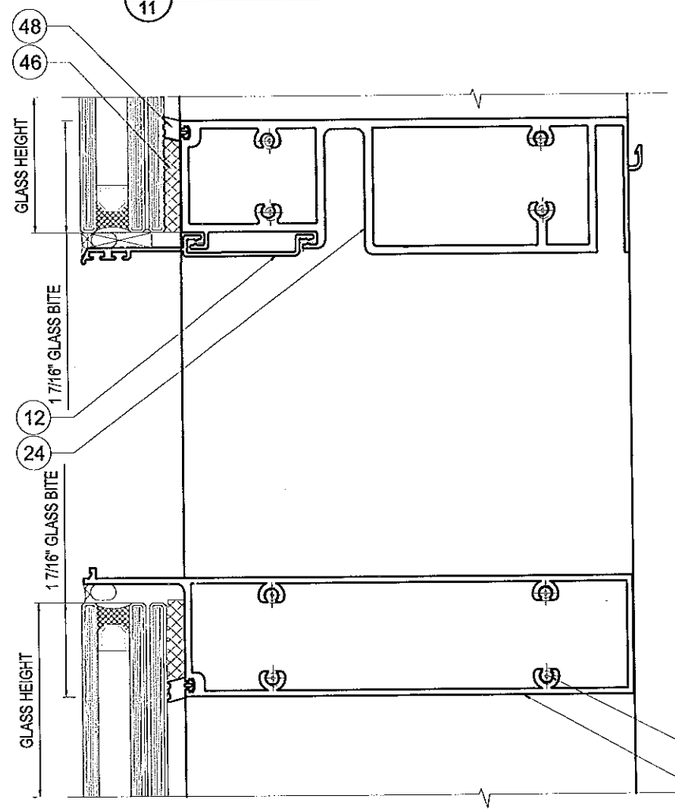

5/11 CANTILEVER HORIZONTAL

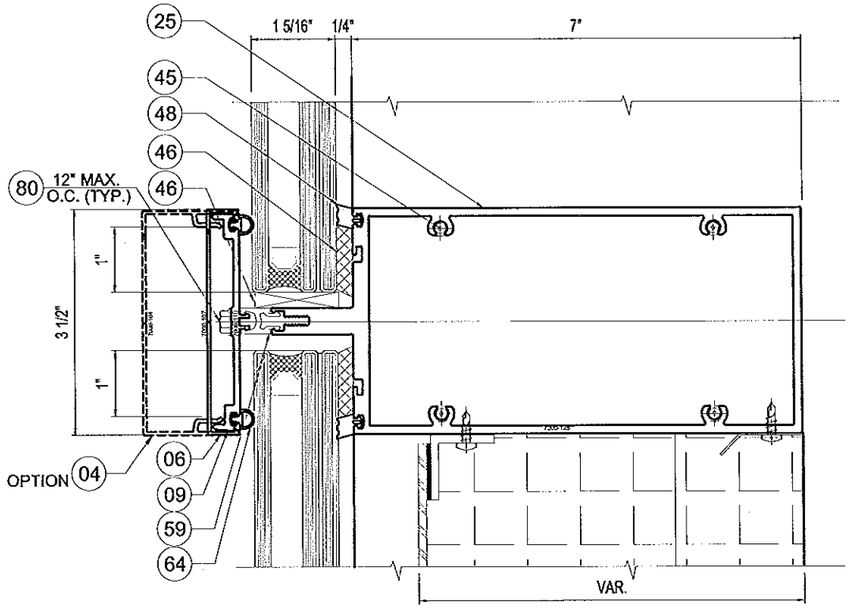

3/11 HORIZONTAL CAPTURED OPTION 2

REVISIONS		
NO.	DATE	DESCRIPTION

MCY ENGINEERING, INC.
GLAZING CONSULTANTS
8501 SW 124 AVE. SUITE 205A MIAMI, FL 33183
P: 305.271.0117
F: 305.921.4786
www.MCYEngineering.com
MCY.Engineering@Att.net

SERIES 7000 ALUMINUM CURTAIN WALL - SMI

GLASSWALL, LLC.
3550 N.W. 49 STREET. MIAMI, FLORIDA 33142
Phone (305) 638 5151 Fax (305) 638 5158

MAY 09 2013

Approved as complying with the Florida Building Code
Date June 6, 2013
NOA# 12-1126.05
Miami Dade Product Control
By
MIAMI DADE COUNTY

YIPING WANG, P.E.
FLORIDA REGISTRATION
NO. E 65283
C.A.N. 28677
STATE OF FLORIDA
PROFESSIONAL ENGINEER

DATE	05/09/2013
SCALE	AS NOTED
DRAWN	A.R.
PROJECT	MCY12-143

DRAWING NO.
AD12-65

SHEET 11 OF 38

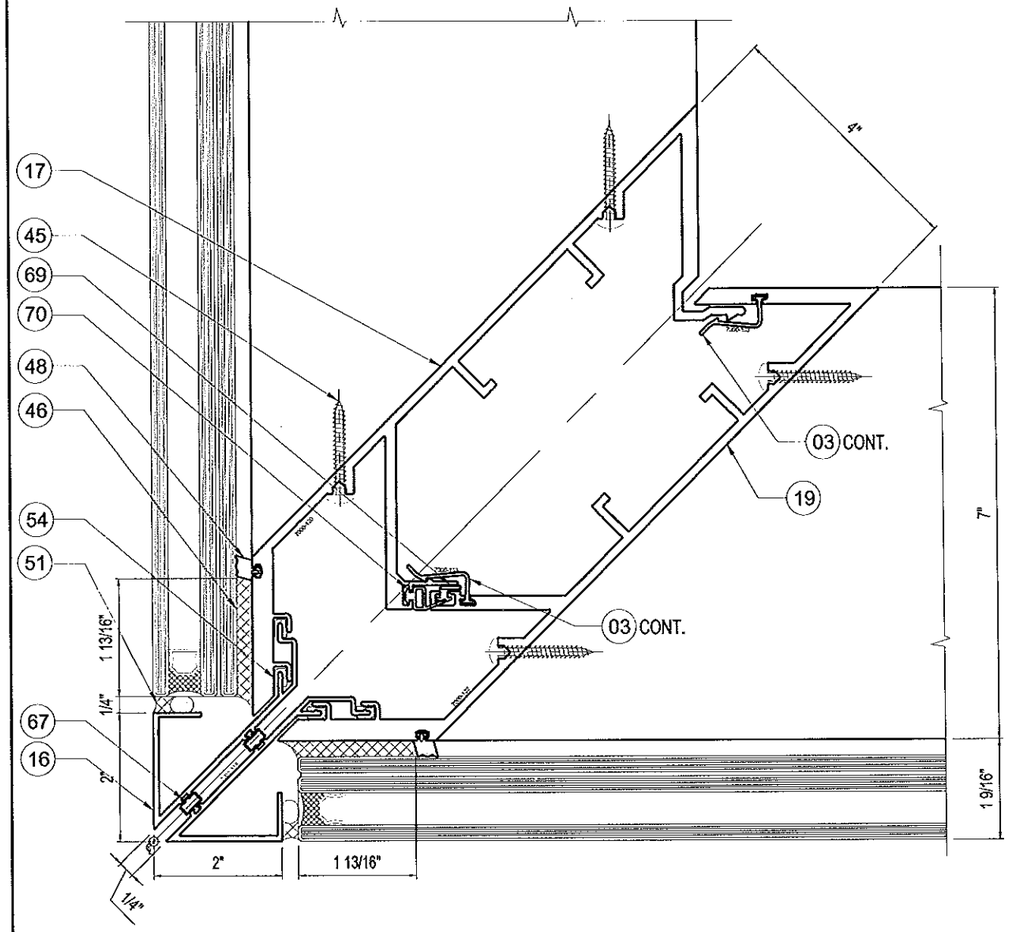

6/12 OUTSIDE CORNER MULLION

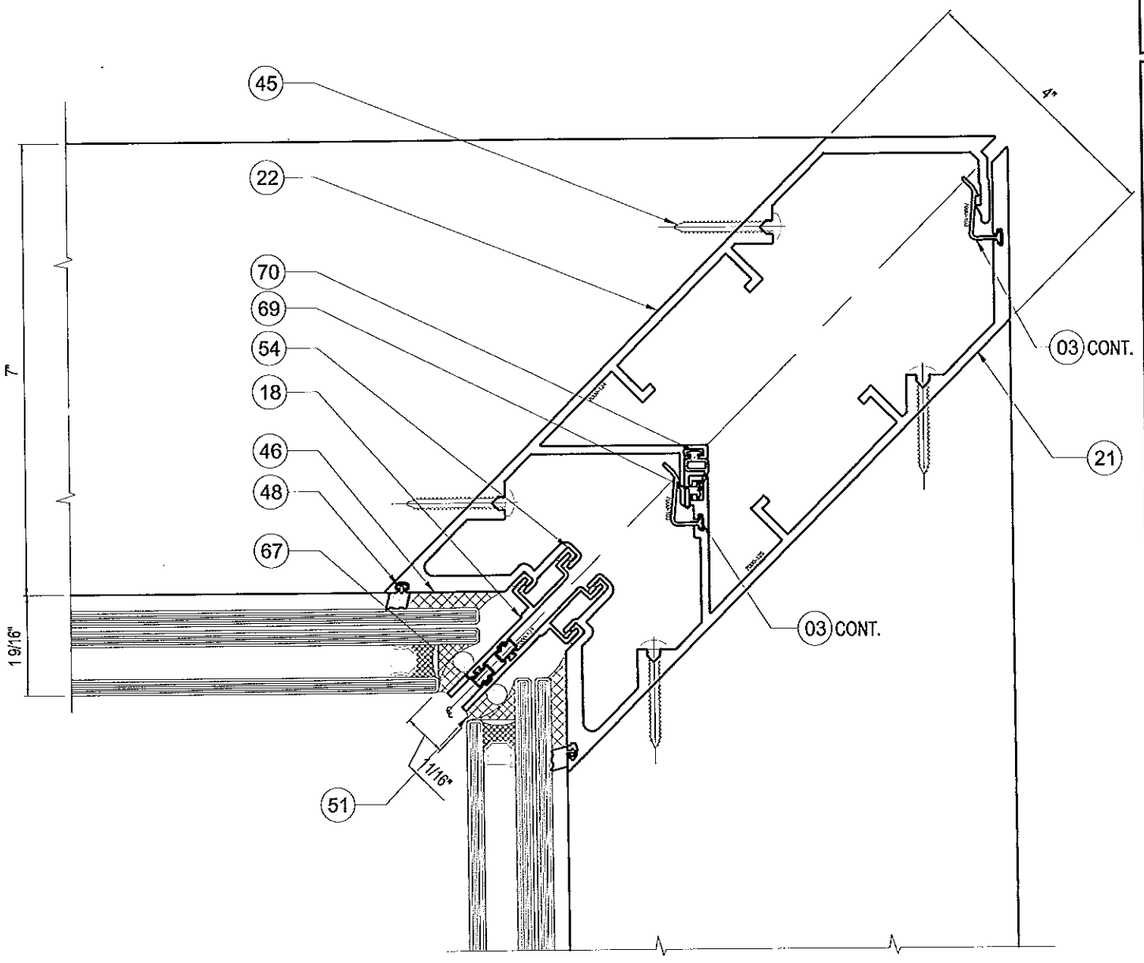

6A/12 INSIDE CORNER MULLION

NOTE:
REFER TO SHEETS 6 & 7 FOR TYP. CORNER MULLION SPANS, REINF. AND DESIGN LOAD REQUIRED

MAY 0 9 2013

Approved as complying with the Florida Building Code
Date June 6, 2013
NOA# 12-1126.05
Miami Dade Product Control
By [signature]
MIAMI DADE COUNTY

YIPING WANG, P.E.
FLORIDA REGISTRATION
NO. #53363
C.A.N. 28677
STATE OF FLORIDA
PROFESSIONAL ENGINEER

REVISIONS		
NO.	DATE	DESCRIPTION

MCY ENGINEERING, INC.
GLAZING CONSULTANTS
8501 SW 124 AVE. SUITE 205A
MIAMI, FL. 33183
P: 305.271.0117
F: 305.921.4786
www.MCYEngineering.com
MCY.Engineering@Att.net

SERIES 7000 ALUMINUM CURTAIN WALL - SMI

GLASSWALL, LLC.
3550 N.W. 49 STREET. MIAMI, FLORIDA 33142
Phone (305) 638 5151 Fax (305) 638 5158

DATE	05/09/2013
SCALE	AS NOTED
DRAWN	A.R.
PROJECT	MCY12-143

DRAWING NO.
AD12-65

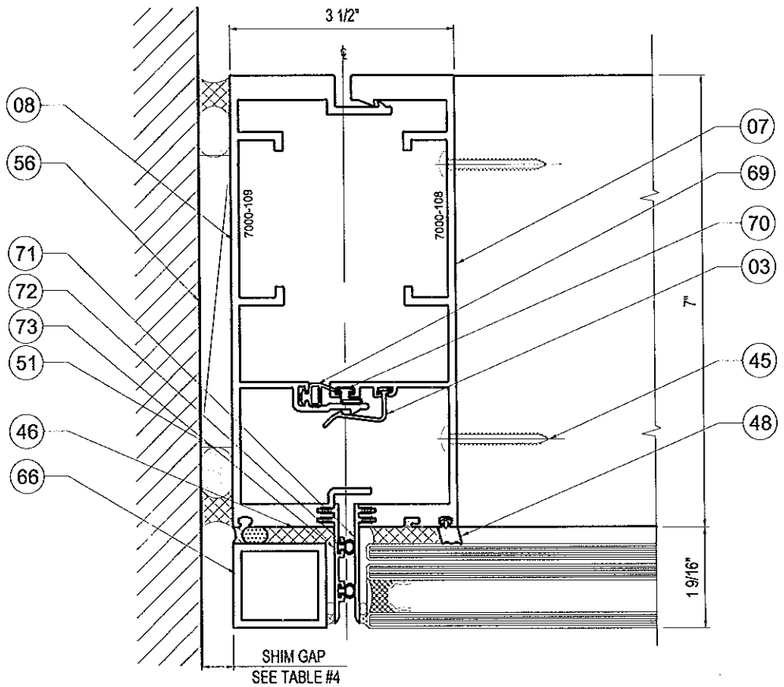

7/13 TYP. JAMB BUTT GLAZED
OPTION 1

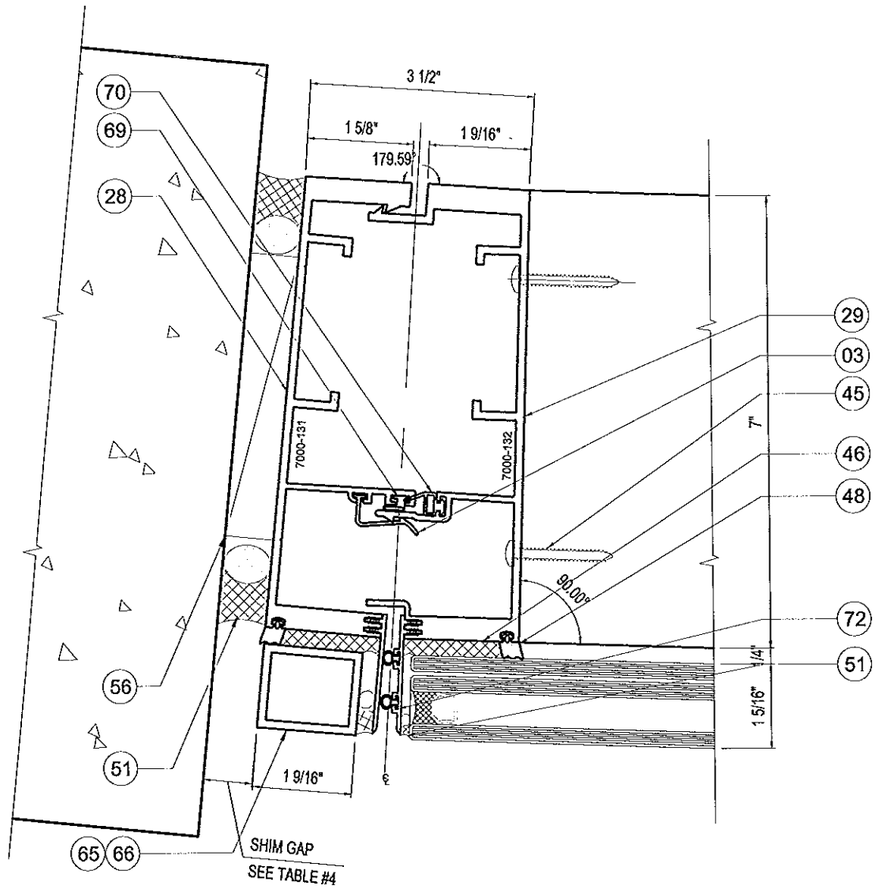

7/13 TYP. JAMB CURVED
OPTION 2

TABLE #4: MIN/MAX SHIM GAP

JAMB SPAN*	MIN. GAP	MAX. GAP
≤ 120"	0.38"	0.75"
132"	0.42"	0.75"
144"	0.46"	0.75"
156"	0.5"	0.75"
168"	0.54"	0.75"
180"	0.58"	0.75"
192"	0.62"	0.75"
204"	0.65"	0.75"
208"	0.67"	0.75"

*JAMB SPAN: - ANCHOR ℄ TO ℄

REVISIONS		
NO.	DATE	DESCRIPTION

MCY ENGINEERING, INC.
GLAZING CONSULTANTS
8501 SW 124 AVE. SUITE 205A
MIAMI, FL. 33183
P: 305.271.0117
F: 305.921.4786
www.MCYEngineering.com
MCY.Engineering@Att.net

SERIES 7000 ALUMINUM CURTAIN WALL - SMI

GLASSWALL, LLC.
3550 N.W. 49 STREET. MIAMI, FLORIDA 33142
Phone (305) 638 5151 Fax (305) 638 5158

MAY 09 2013

Approved as complying with the
Florida Building Code
Date June 6, 2013
NOA# 12-1126.05
Miami Dade Product Control
By Manuel Perez
MIAMI DADE COUNTY

YIPING WANG
LICENSED
YIPING WANG, P.E.
FLORIDA REGISTRATION
NO. 55933
C.A.N. 28677
STATE OF FLORIDA
PROFESSIONAL ENGINEER

DATE	05/09/2013
SCALE	AS NOTED
DRAWN	A.R.
PROJECT	MCY12-143

DRAWING NO.
AD12-65

SHEET 13 OF 38

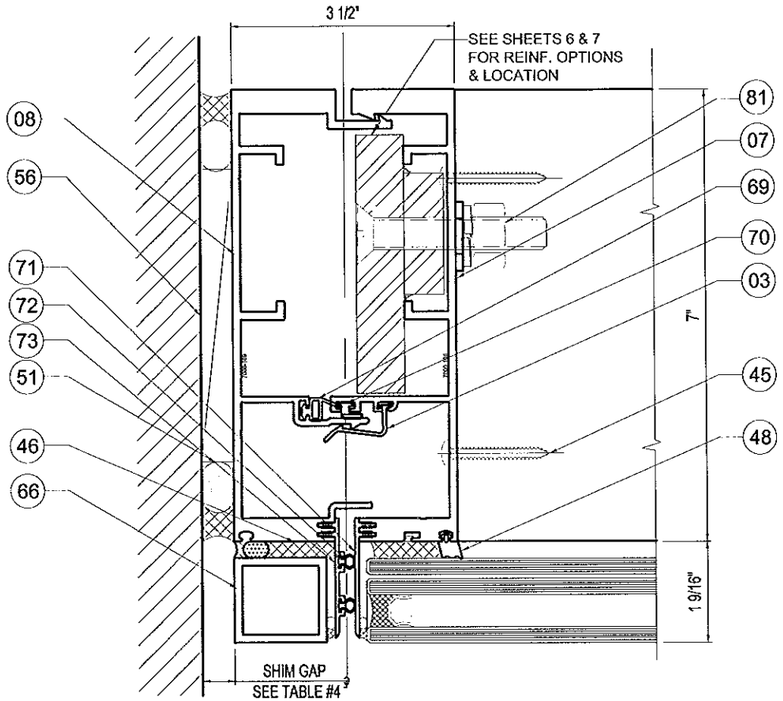

8/14 TYP. JAMB BUTT GLAZED W/ REINF.
OPTION 1

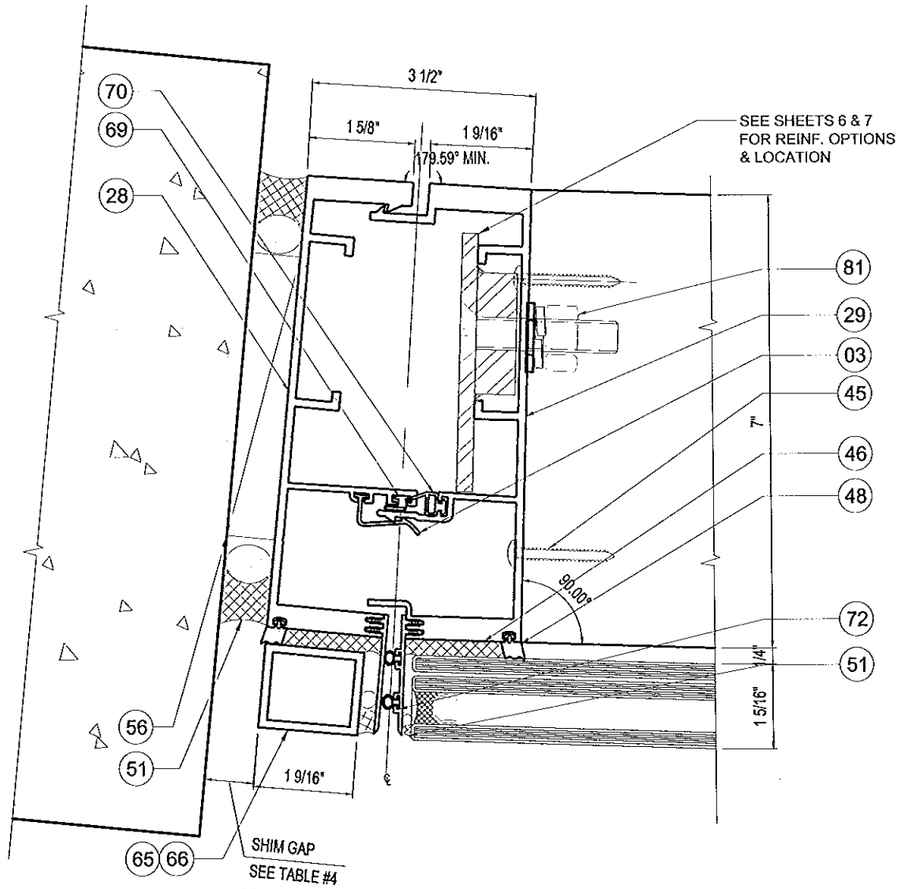

8/14 TYP. JAMB CURVED W/ REINF.
OPTION 2

NOTE:
REFER TO SHEETS 6 & 7 FOR TYP. JAMB SPANS, REINFORCEMENT AND DESIGN LOAD REQUIRED

TABLE #4: MIN/MAX SHIM GAP

JAMB SPAN*	MIN. GAP	MAX. GAP
≤ 120"	0.38"	0.75"
132"	0.42"	0.75"
144"	0.46"	0.75"
156"	0.5"	0.75"
168"	0.54"	0.75"
180"	0.58"	0.75"
192"	0.62"	0.75"
204"	0.65"	0.75"
208"	0.67"	0.75"

*JAMB SPAN: - ANCHOR ℄ TO ℄

REVISIONS

NO.	DATE	DESCRIPTION

MCY ENGINEERING, INC.
GLAZING CONSULTANTS
8501 SW 124 AVE. SUITE 205A
MIAMI, FL. 33183
P: 305.271.0117
F: 305.921.4786
www.MCYEngineering.com
MCY.Engineering@Att.net

SERIES 7000 ALUMINUM CURTAIN WALL - SMI

GLASSWALL, LLC.
3550 N.W. 49 STREET, MIAMI, FLORIDA 33142
Phone (305) 638 5151 Fax (305) 638 5158

MAY 09 2013

Approved as complying with the Florida Building Code
Date June 6, 2013
NOA# 12-1126.05
Miami Dade Product Control
By Manuel Perez
MIAMI DADE COUNTY

YIPING WANG, P.E.
FLORIDA REGISTRATION
NO. #55983
C.A.N. 28677
STATE OF FLORIDA
PROFESSIONAL ENGINEER

DATE	05/09/2013
SCALE	AS NOTED
DRAWN	A.R.
PROJECT	MCY12-143

DRAWING NO.
AD12-65

SHEET 14 OF 38

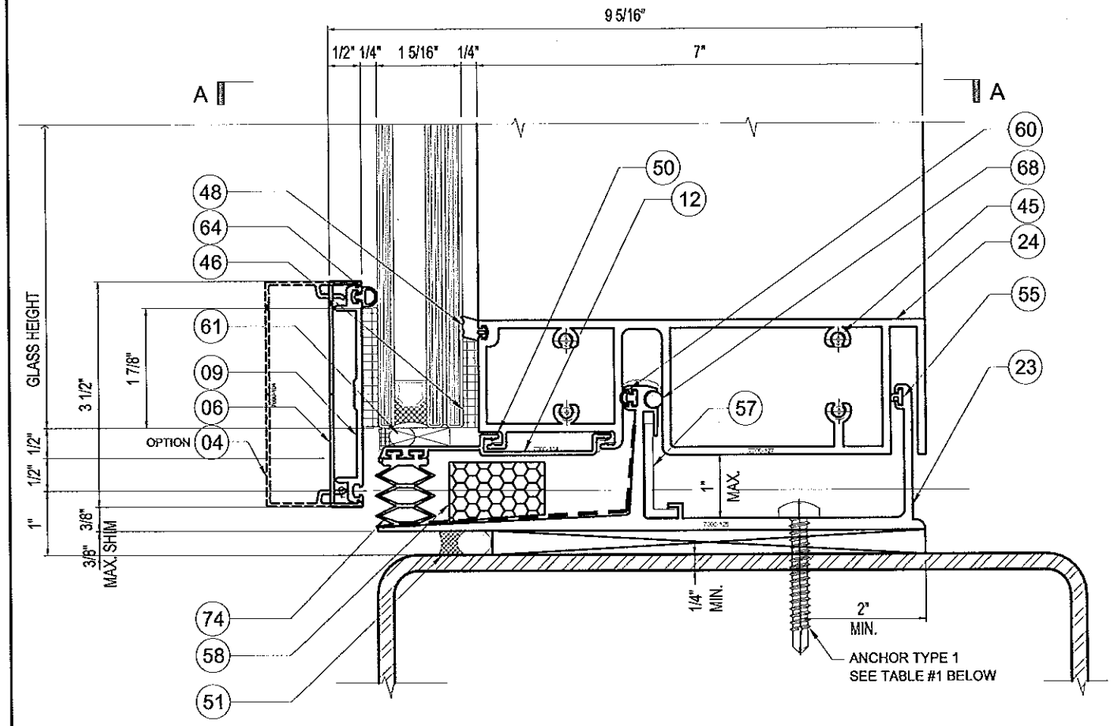

9/15 SILL DETAIL OPTION A
STEEL SUBSTRATE

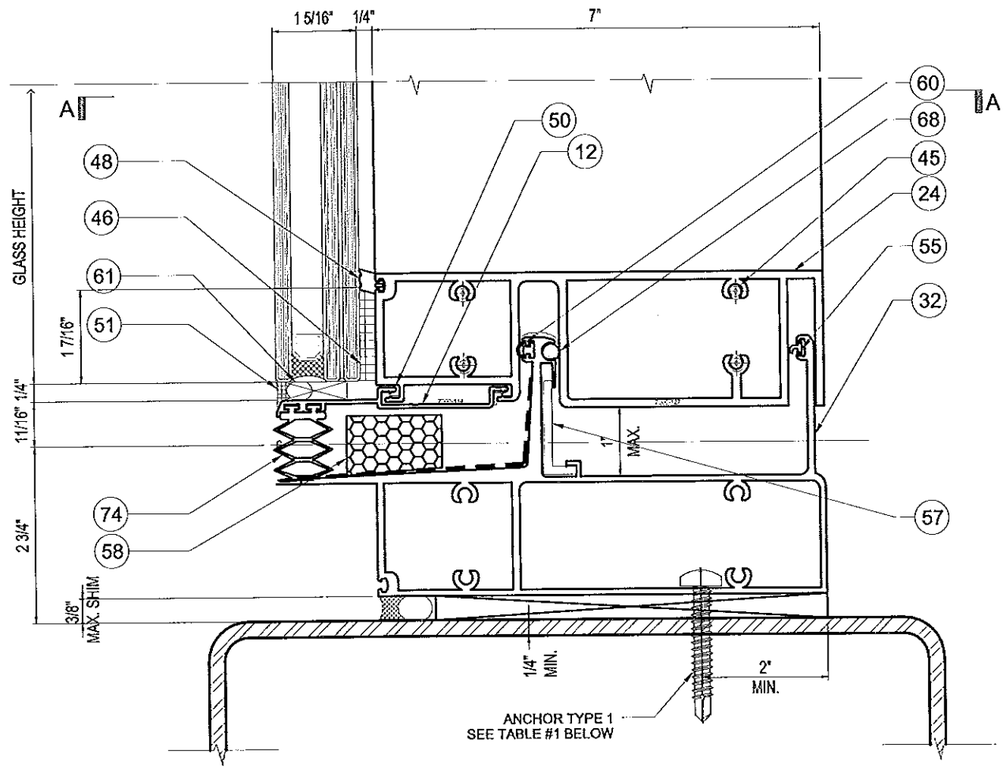

9/15 SILL DETAIL OPTION B
STEEL SUBSTRATE

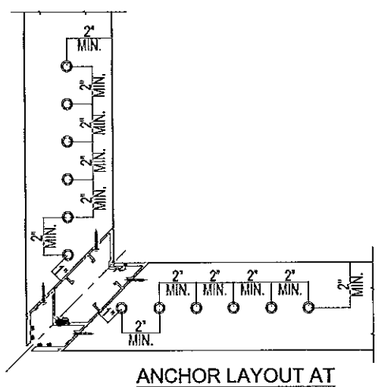

ANCHOR LAYOUT AT
OUTSIDE CORNER MULLION

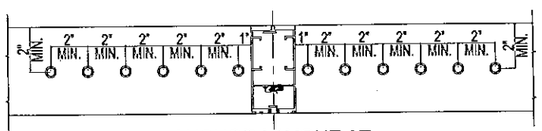

ANCHOR LAYOUT AT
TYP. MULLION

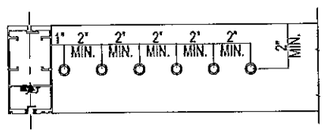

ANCHOR LAYOUT AT JAMB

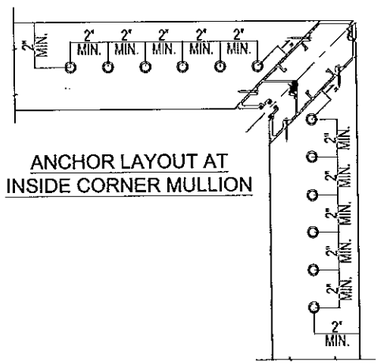

ANCHOR LAYOUT AT
INSIDE CORNER MULLION

		MAX. DESIGN LOAD (PSF)				
	SPAN	MULLION SPACING (M.S.)				
		36	42	48	54	60
	(in)	(in)	(in)	(in)	(in)	(in)
AO#1 (4200 lbs)	120	140	140	140	140	140
	126	140	140	140	140	140
	132	140	140	140	140	140
	138	140	140	140	140	140
	144	140	140	140	140	140
AO#2 (3500 lbs)	120	140	140	140	140	140
	126	140	140	140	140	133
	132	140	140	140	140	127
	138	140	140	140	135	122
	144	140	140	140	130	117
AO#3 (2800 lbs)	120	140	140	140	124	112
	126	140	140	133	119	107
	132	140	140	127	113	102
	138	140	139	122	108	97
	144	140	133	117	104	93

SECTION A-A

ANCHOR TYPE 1 :5/16" SELF DRILLING SCREWS
(GRADE 5 Fu=120ksi Fy=92ksi)
INTO METAL STRUCTURES

STEEL : 1/4" MIN. THICKNESS (Fy= 36 ksi MIN.)
(STEEL IN CONTACT WITH ALUMINUM
TO BE PLATED OR PAINTED)

TABLE #1: NO. OF ANCHOR TYPE 1-SILL ANCHOR.

ANCHOR OPTIONS (Rmax. LBS)	OPTION A	OPTION B
	NO. OF ANCHORS @EA.SIDE OF MULL.	NO. OF ANCHORS @EA.SIDE OF MULL.
	ANCHOR TYPE 1	ANCHOR TYPE 1
AO#1 (4200)	6	6
AO#2 (3500)	5	5
AO#3 (2800)	4	4

FOR AO#1, AO#2 & AO#3 ANCHOR CAPACITY VS. SPAN
AND MULLION SPACING SEE CHART ON THE LEFT.

Approved as complying with the
Florida Building Code
Date June 6, 2013
NOA# 12-1126.05
Miami Dade Product Control
By Manuel Cerra
MIAMI DADE COUNTY

MAY 09 2013

YIPING WANG, P.E.
FLORIDA REGISTRATION
NO. 45985
C.A.N. 28677
STATE OF FLORIDA
PROFESSIONAL ENGINEER

REVISIONS		
NO.	DATE	DESCRIPTION

MCY ENGINEERING, INC.
GLAZING CONSULTANTS
8501 SW 124 AVE. SUITE 205A MIAMI, FL 33183
P: 305.271.0117
F: 305.921.4786
www.MCYEngineering.com MCY.Engineering@Att.net

SERIES 7000 ALUMINUM CURTAIN WALL - SMI

GLASSWALL, LLC.
3550 N.W. 49 STREET. MIAMI, FLORIDA 33142
Phone (305) 638 5151 Fax (305) 638 5158

DATE	05/09/2013
SCALE	AS NOTED
DRAWN	A.R.
PROJECT	MCY12-143

DRAWING NO.
AD12-65

SHEET 15 OF 38

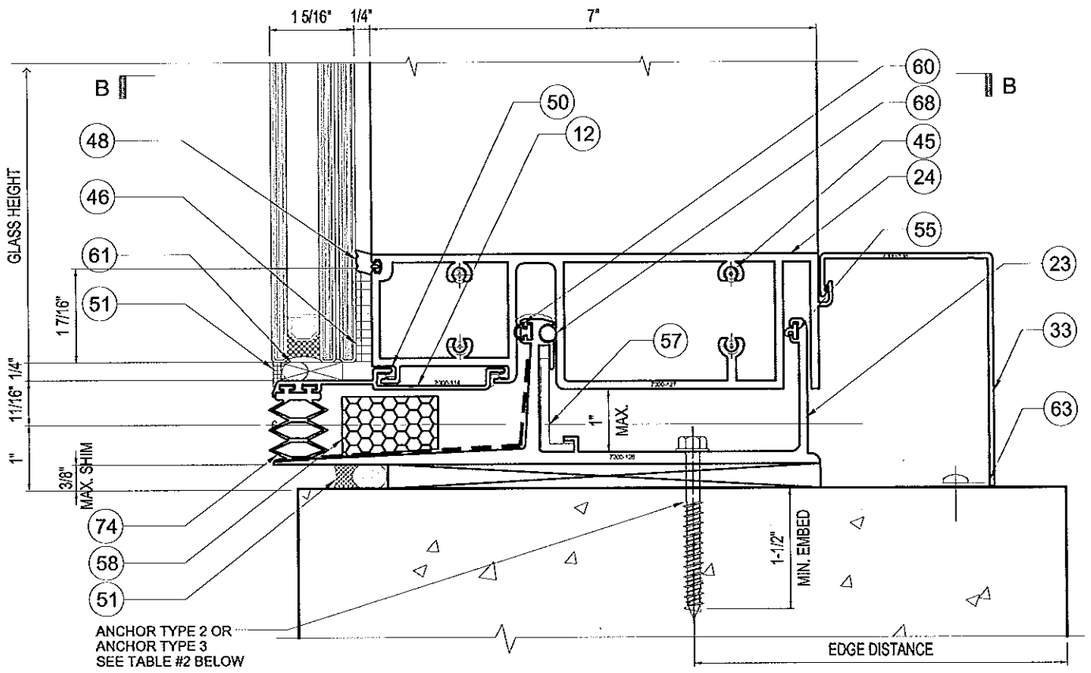

10/16 SILL DETAIL OPTION C
CONCRETE SUBSTRATE

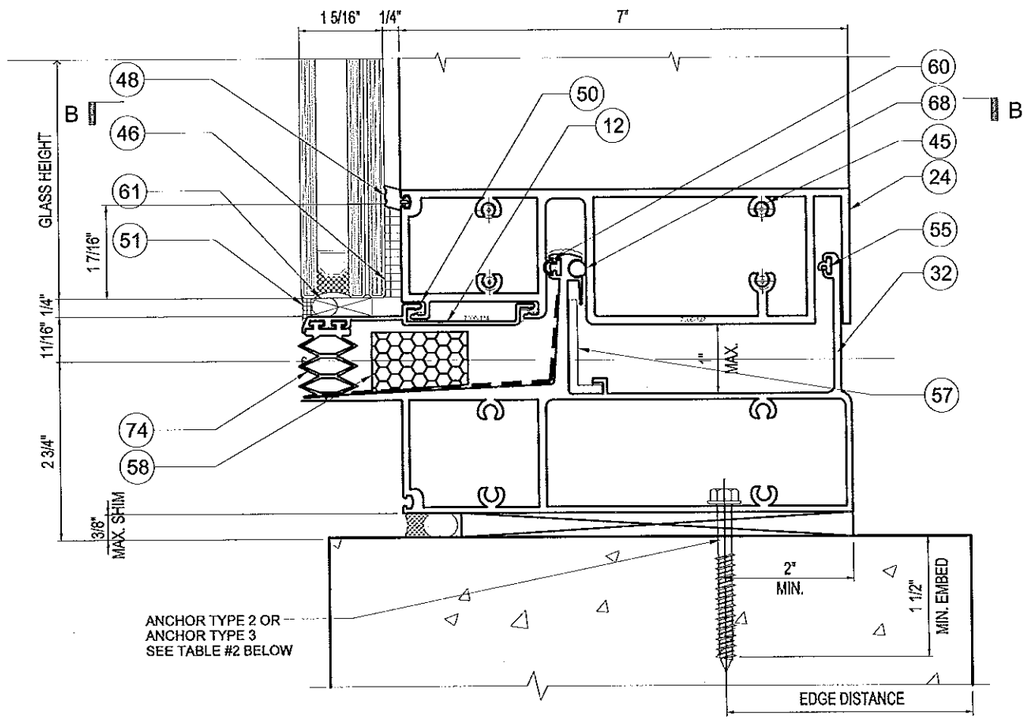

10/16 SILL DETAIL OPTION D
CONC. SUBSTRATE

		MAX. DESIGN LOAD (PSF)				
	SPAN	MULLION SPACING (M.S.)				
		36	42	48	54	60
	(in)	(in)	(in)	(in)	(in)	(in)
AO#1 (4200 lbs)	120	140	140	140	140	140
	126	140	140	140	140	140
	132	140	140	140	140	140
	138	140	140	140	140	140
	144	140	140	140	140	140
AO#2 (3500 lbs)	120	140	140	140	140	140
	126	140	140	140	140	133
	132	140	140	140	140	127
	138	140	140	140	135	122
	144	140	140	140	130	117
AO#3 (2800 lbs)	120	140	140	140	124	112
	126	140	140	133	119	107
	132	140	140	127	113	102
	138	140	139	122	108	97
	144	140	133	117	104	93
AO#4 (2300 lbs)	120	140	131	115	102	92
	126	140	125	110	97	88
	132	139	119	105	93	84
	138	133	114	100	89	80
	144	128	110	96	85	77

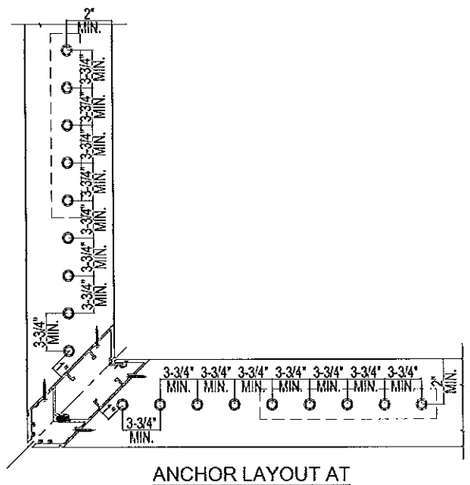

ANCHOR LAYOUT AT
OUTSIDE CORNER MULLION

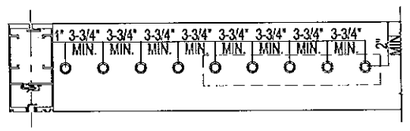

ANCHOR LAYOUT AT JAMB

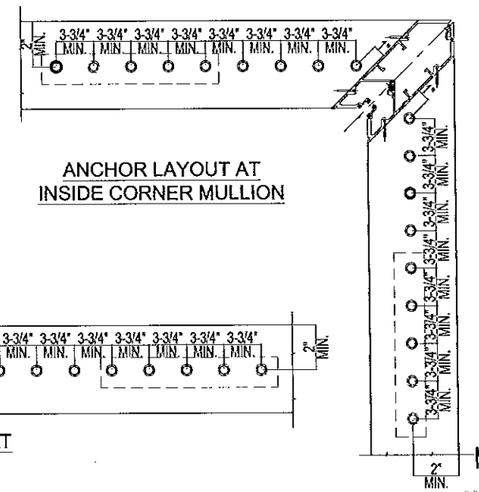

ANCHOR LAYOUT AT
INSIDE CORNER MULLION

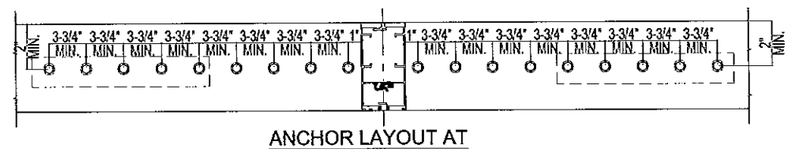

ANCHOR LAYOUT AT
TYP. MULLION

SECTION B-B

ANCHOR TYPE 2: 5/16" DIA. ULTRACON BY ELCO
(Fu=177ksi Fy=120ksi)

DIRECTLY INTO CONCRETE fc' = 4000 psi MIN.
1-1/2" MIN. EMBED INTO CONCRETE
3-1/8" MIN EDGE DISTANCE

ANCHOR TYPE 3: 3/8" DIA. WEDGE BOLT BY POWER
(Fu=100ksi Fy=65ksi)

DIRECTLY INTO CONCRETE fc'=4000psi MIN.
1-1/2" MIN. EMBED INTO CONCRETE
3" MIN EDGE DISTANCE

TABLE #2: NO. OF ANCHORS TYPE 2 OR 3 - SILL ANCHOR.

ANCHOR OPTIONS (Rmax. LBS)	OPTION C NO. OF ANCHORS @EA.SIDE OF MULL.		OPTION D NO. OF ANCHORS @EA.SIDE OF MULL.	
	ANCHOR TYPE 2	ANCHOR TYPE 3	ANCHOR TYPE 2	ANCHOR TYPE 3
AO#1 (4200)	7	7	9	8
AO#2 (3500)	6	5	8	6
AO#3 (2800)	5	4	6	5
AO#4 (2300)	4	4	5	4

FOR AO#1, AO#2, AO#3 & AO#4 ANCHOR CAPACITY
VS. SPAN AND MULLION SPACING SEE CHART ON THE LEFT.

Approved as complying with the
Florida Building Code
Date June 6 2013
NOA# 12-1126.05
Miami Dade Product Control
By
MIAMI DADE COUNTY

YIPING WANG, P.E.
FLORIDA REGISTRATION
PE. #55983
CA. 26628
STATE OF FLORIDA
PROFESSIONAL ENGINEER

MAY 09 2013

REVISIONS		
NO.	DATE	DESCRIPTION

MCY ENGINEERING, INC.
GLAZING CONSULTANTS
8501 SW 124 AVE. SUITE 205A P: 305.271.0117
MIAMI, FL 33183 F: 305.921.4786
www.MCYEngineering.com MCY.Engineering@Att.net

SERIES 7000 ALUMINUM CURTAIN WALL - SMI

GLASSWALL, LLC.
3550 N.W. 49 STREET. MIAMI, FLORIDA 33142
Phone (305) 638 5151 Fax (305) 638 5158

DATE	05/09/2013
SCALE	AS NOTED
DRAWN	A.R.
PROJECT	MCY12-143
DRAWING NO.	AD12-65
SHEET	16 OF 38

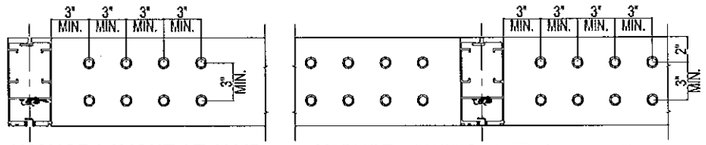

ANCHOR LAYOUT AT JAMB

ANCHOR LAYOUT AT TYP. MULLION

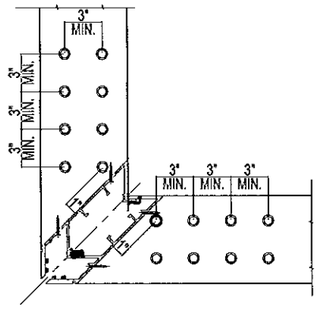

ANCHOR LAYOUT AT OUTSIDE CORNER

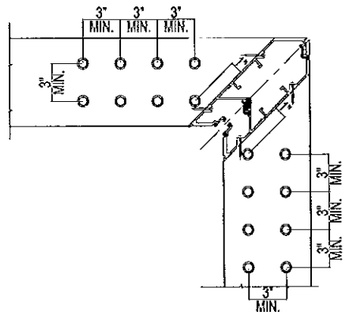

ANCHOR LAYOUT AT INSIDE CORNER

SECTION C-C

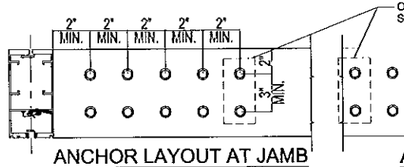

ANCHOR LAYOUT AT JAMB

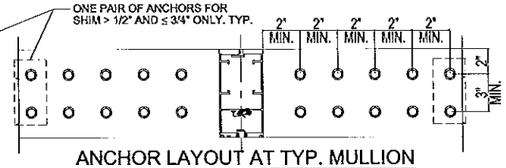

ANCHOR LAYOUT AT TYP. MULLION

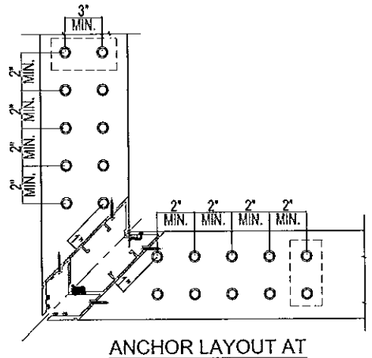

ANCHOR LAYOUT AT OUTSIDE CORNER

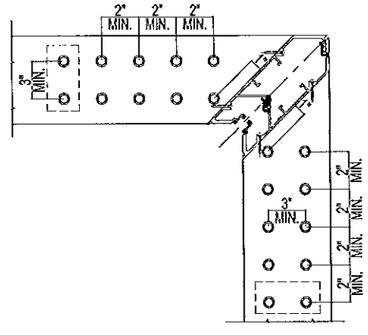

ANCHOR LAYOUT AT INSIDE CORNER

SECTION D-D

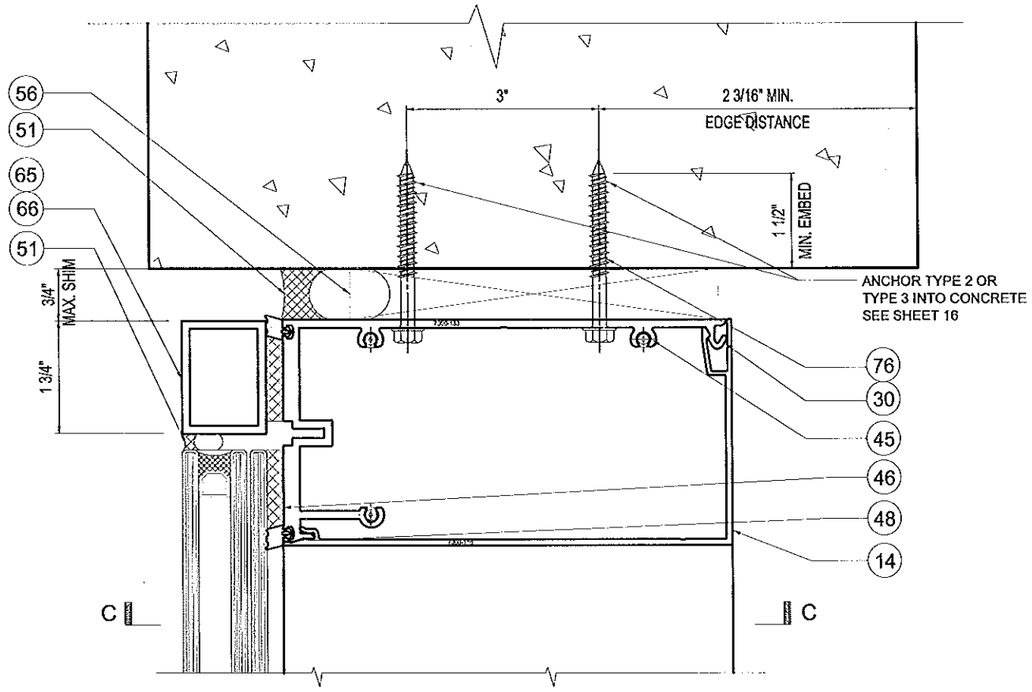

11/17 HEAD DETAIL OPTION A

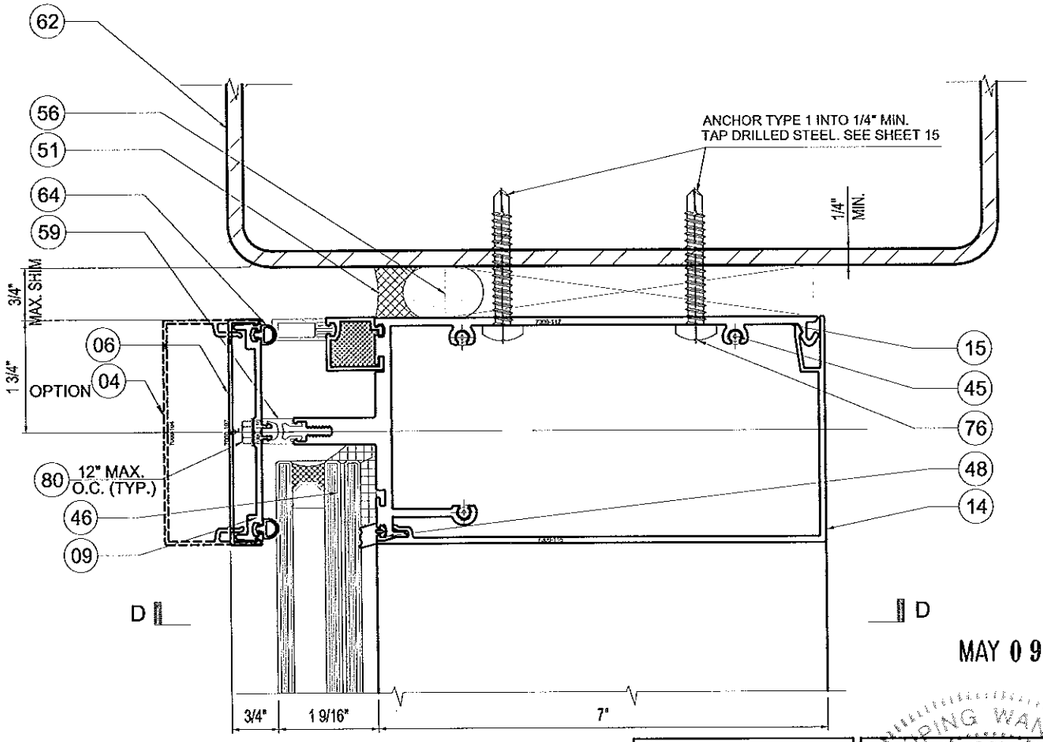

11/17 HEAD DETAIL OPTION B

NOTE:
BOTH BUTT GLAZED AND CAPTURED HEAD OPTIONS CAN BE ANCHORED INTO CONCRETE OR STEEL

Approved as complying with the Florida Building Code
Date June 6, 2013
NOA# 12-1126.05
Miami Dade Product Control
By Manuel Perez
MIAMI DADE COUNTY

YIPING WANG, PE
FLORIDA REGISTRATION
PE #55983
C.A.R. 26577
STATE OF FLORIDA
PROFESSIONAL ENGINEER

MAY 09 2013

REVISIONS

NO.	DATE	DESCRIPTION

MCY ENGINEERING, INC.
GLAZING CONSULTANTS
8501 SW 124 AVE. SUITE 205A
MIAMI, FL 33183
P: 305.271.0117
F: 305.921.4786
www.MCYEngineering.com
MCY.Engineering@Att.net

SERIES 7000 ALUMINUM CURTAIN WALL - SMI

GLASSWALL, LLC.
3550 N.W. 49 STREET. MIAMI, FLORIDA 33142
Phone (305) 638 5151 Fax (305) 638 5158

DATE	05/09/2013
SCALE	AS NOTED
DRAWN	A.R.
PROJECT	MCY12-143

DRAWING NO.
AD12-65

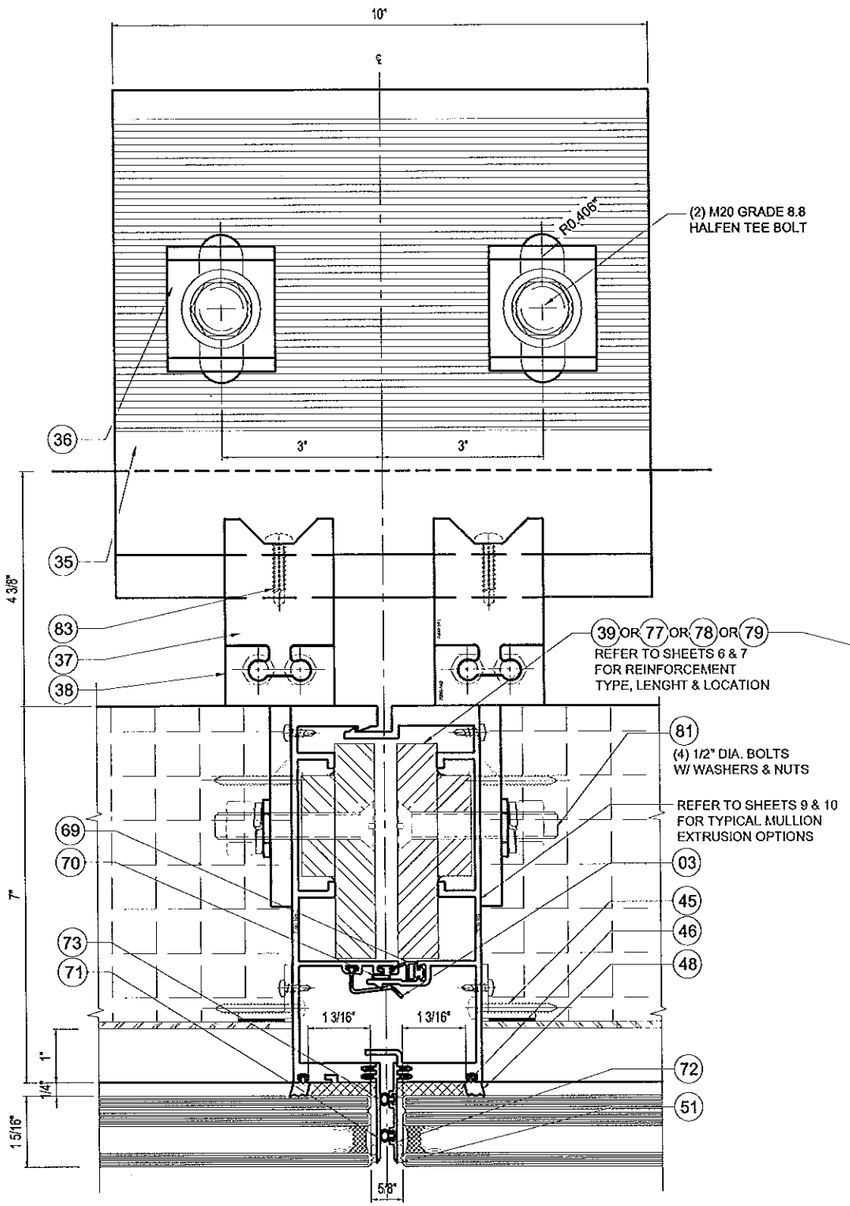

12/18 TYP. MULLION - ANCHOR TYPE A

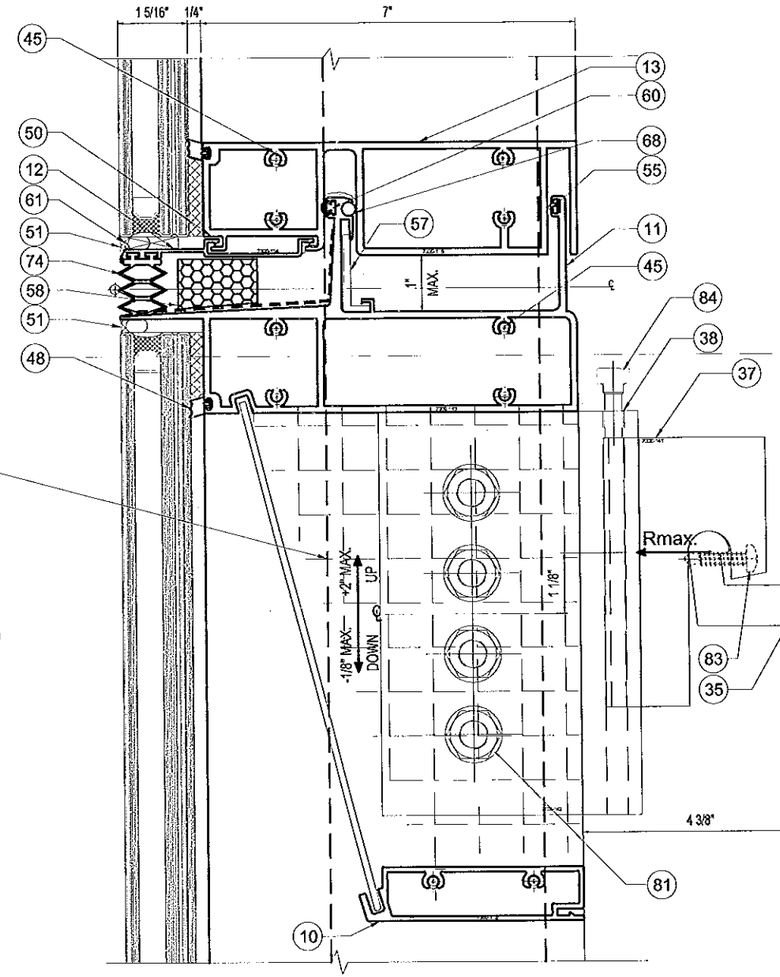

13/18 EXP. JOINT - ANCHOR TYPE A
SECTION

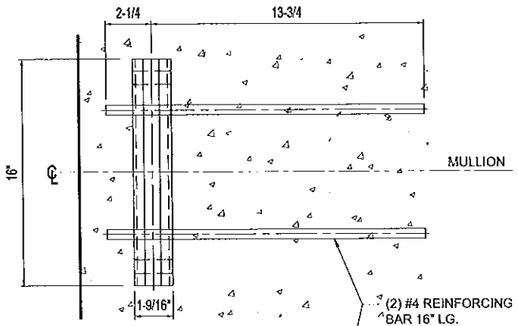

R1 ANCHOR CHANNEL & REBAR LAYOUT

12/18 TYP. MULLION

R1

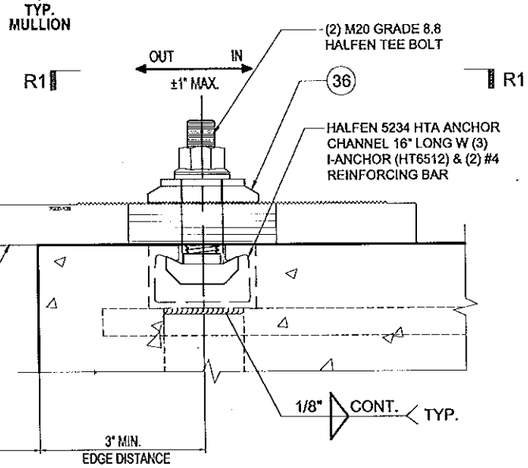

R1

REVISIONS

NO.	DATE	DESCRIPTION

MCY ENGINEERING, INC.
GLAZING CONSULTANTS
8501 SW 124 AVE. SUITE 205A
MIAMI, FL. 33183
P: 305.271.0117
F: 305.921.4786
www.MCYEngineering.com
MCY.Engineering@Att.net

SERIES 7000 ALUMINUM CURTAIN WALL - SMI

GLASSWALL, LLC.
3550 N.W. 49 STREET. MIAMI, FLORIDA 33142
Phone (305) 638 5151 Fax (305) 638 5158

MAY 09 2013

Approved as complying with the
Florida Building Code
Date June 6 2013
NOA# 12-1126.05
Miami Dade Product Control
By Manuel Perez
MIAMI DADE COUNTY

YIPING WANG
STATE OF FLORIDA
YIPING WANG, P.E.
FLORIDA REGISTRATION
NO. PE 45983
C.A.N. 28677
PROFESSIONAL ENGINEER

DATE	05/09/2013
SCALE	AS NOTED
DRAWN	A.R.
PROJECT	MCY12-143

DRAWING NO.
AD12-65

SHEET 16 OF 38

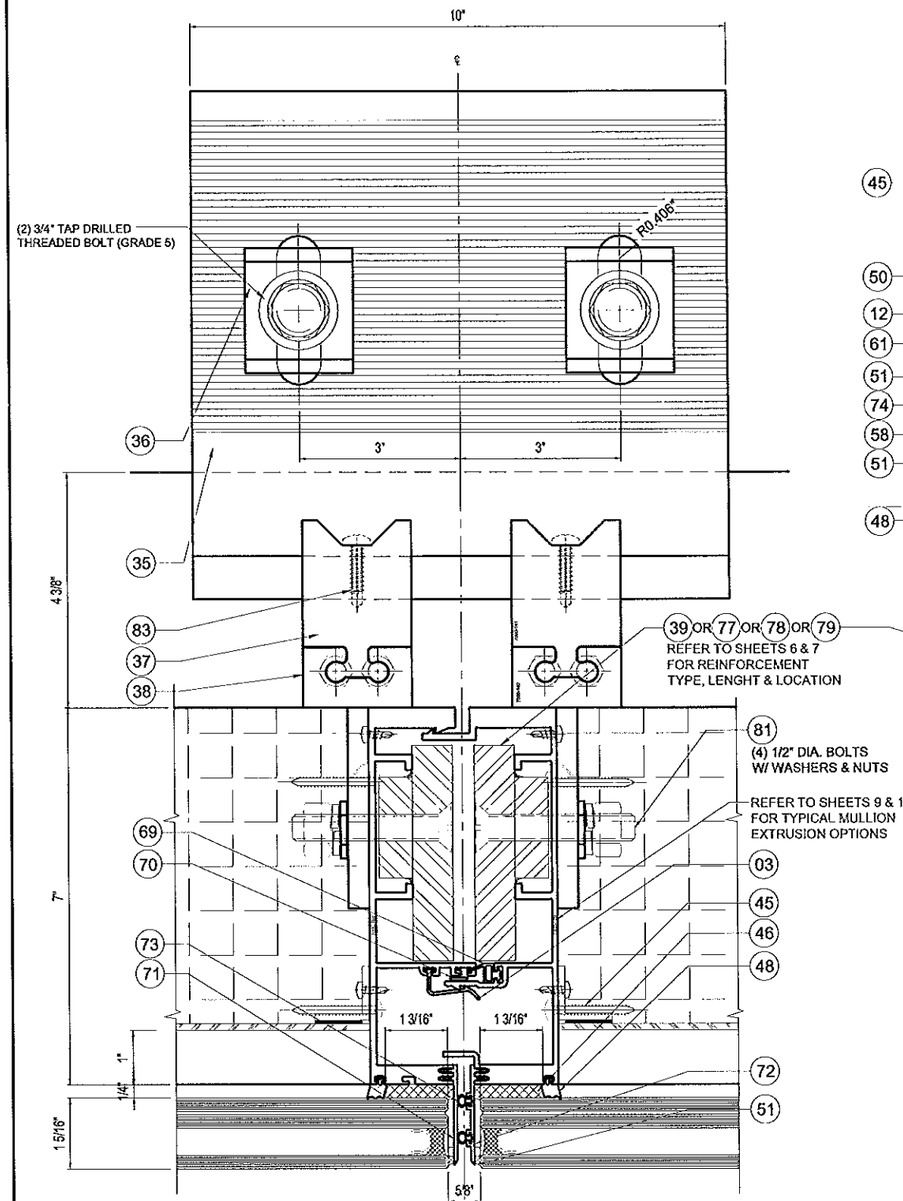

14/19 TYP. MULLION - ANCHOR TYPE B

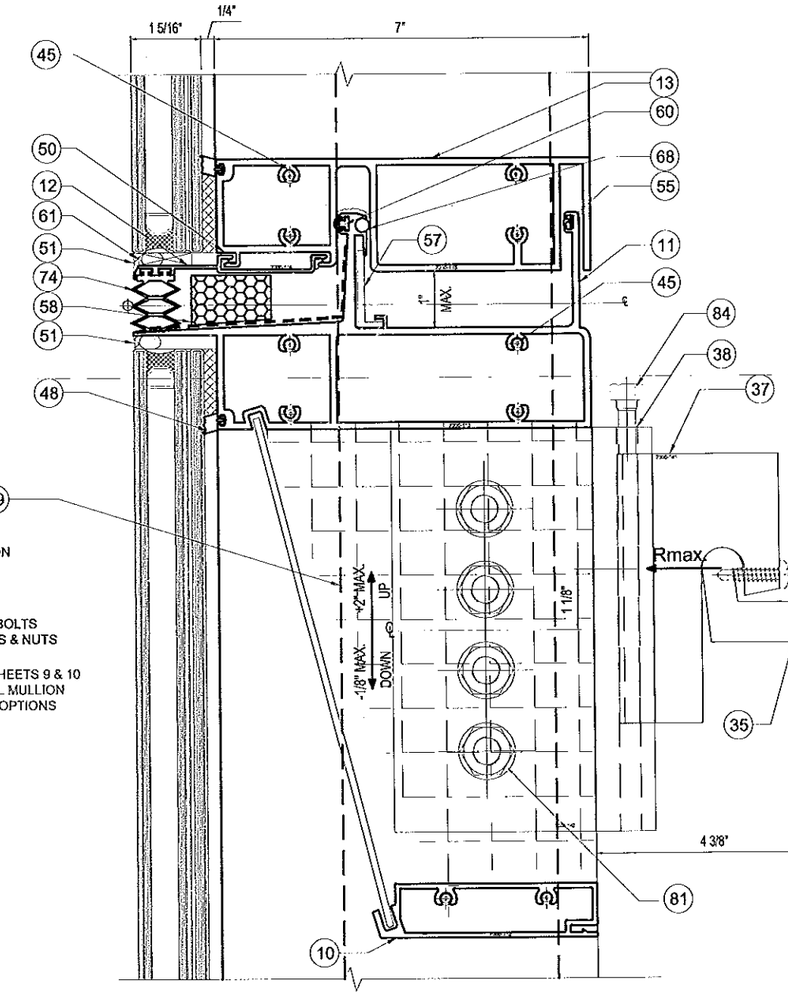

14/19 TYP. MULLION

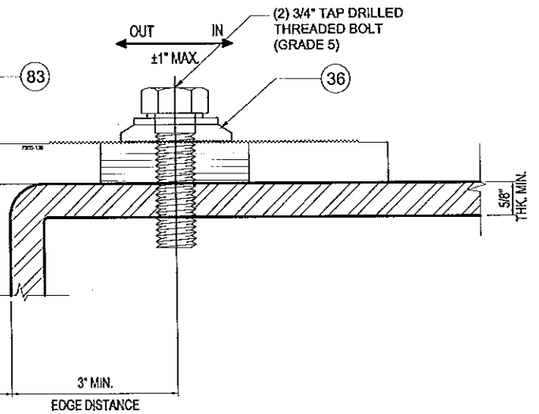

15/19 EXP. JOINT - ANCHOR TYPE B SECTION

MAY 09 2013

Approved as complying with the Florida Building Code
Date June 6 2013
NOA# 12-1126.05
Miami Dade Product Control
By Manuel Perez
MIAMI DADE COUNTY

YIPING WANG LICENSE PE #55983 STATE OF FLORIDA PROFESSIONAL ENGINEER
YIPING WANG, P.E.
FLORIDA REGISTRATION
PE #55983
C.A.N. 28677

REVISIONS		
NO.	DATE	DESCRIPTION

MCY ENGINEERING, INC.
GLAZING CONSULTANTS
8501 SW 124 AVE. SUITE 205A
MIAMI, FL. 33183
P: 305.271.0117
F: 305.921.4786
www.MCYEngineering.com
MCY.Engineering@Att.net

SERIES 7000 ALUMINUM CURTAIN WALL - SMI

GLASSWALL, LLC.

3550 N.W. 49 STREET. MIAMI, FLORIDA 33142
Phone (305) 638 5151 Fax (305) 638 5158

DATE	05/09/2013
SCALE	AS NOTED
DRAWN	A.R.
PROJECT	MCY12-143

DRAWING NO.
AD12-65

SHEET 19 OF 38

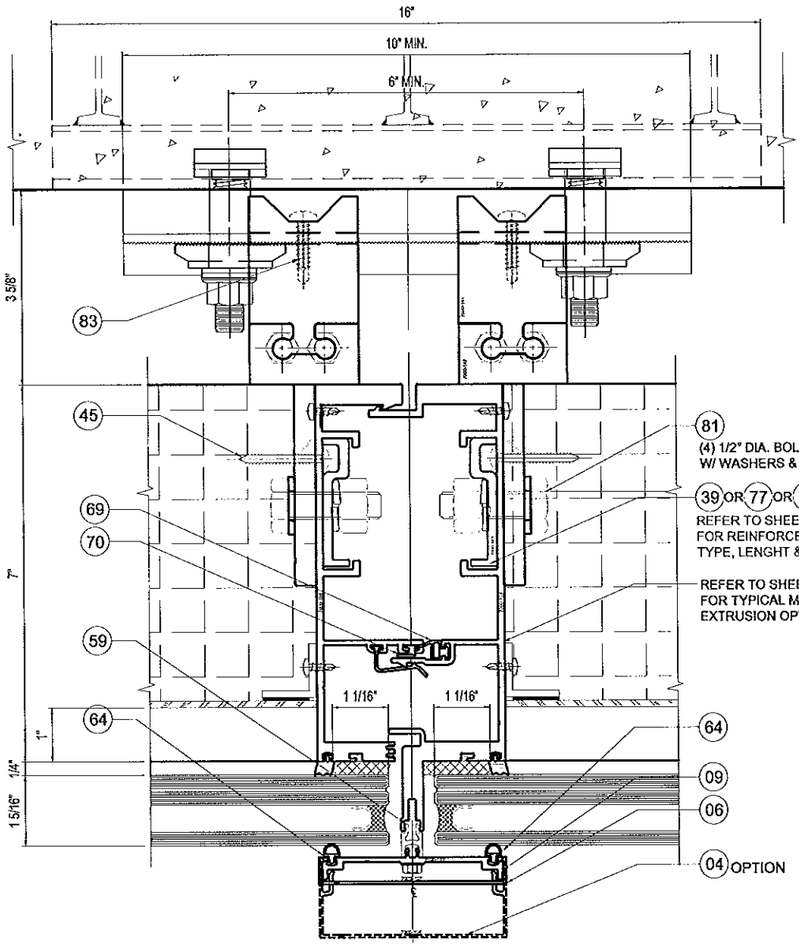

16/20 TYP. MULLION - ANCHOR TYPE C

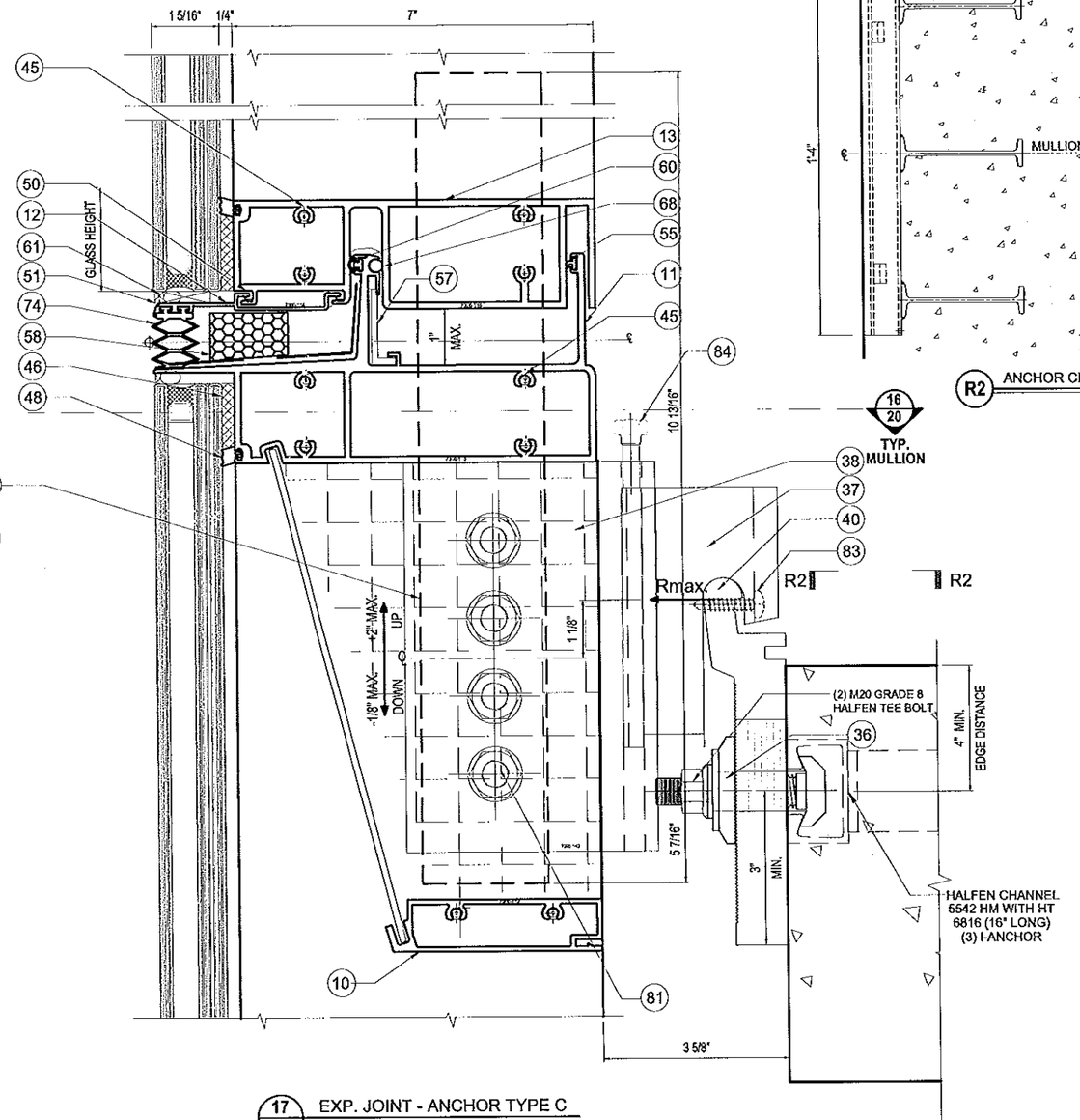

17/20 EXP. JOINT - ANCHOR TYPE C
SECTION

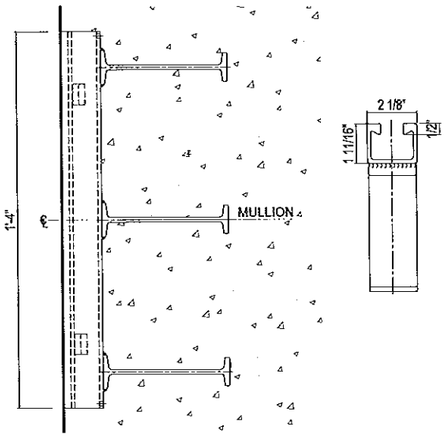

R2 ANCHOR CHANNEL LAYOUT

MAX. MULL. SPACING	MAX. MULL. SPAN	MAX. DESIGN LOAD	MAX. END REACTION Rmax.
5'-0"	10'-0"	90 PSF.	4500 LBS
5'-0"	12'-0"	65 PSF.	3900 LBS

MAY 09 2013

Approved as complying with the Florida Building Code
Date June 6 2013
NOA# 12-1126.05
Miami Dade Product Control
By
MIAMI DADE COUNTY

YIPING WANG
FLORIDA REGISTRATION
NO. 55933
C.A.N. 28577
STATE OF FLORIDA

REVISIONS

NO	DATE	DESCRIPTION

MCY ENGINEERING, INC.
GLAZING CONSULTANTS
8501 SW 124 AVE. SUITE 205A
MIAMI, FL. 33183
P: 305.271.0117
F: 305.921.4786
www.MCYEngineering.com
MCY.Engineering@Att.net

SERIES 7000 ALUMINUM CURTAIN WALL - SMI

GLASSWALL, LLC.
3550 N.W. 49 STREET. MIAMI, FLORIDA 33142
Phone (305) 638 5151 Fax (305) 638 5158

DATE	05/09/2013
SCALE	AS NOTED
DRAWN	A.R.
PROJECT	MCY12-143

DRAWING NO.
AD12-65

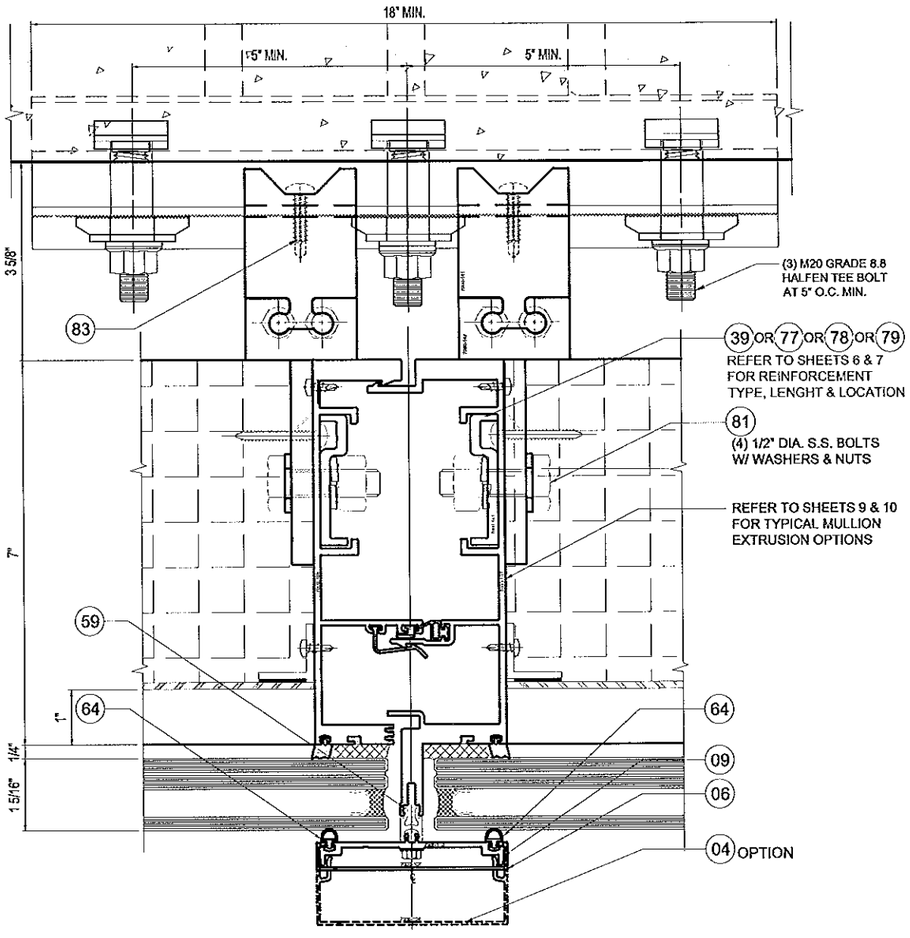

18/21 TYP. MULLION - ANCHOR TYPE C-1

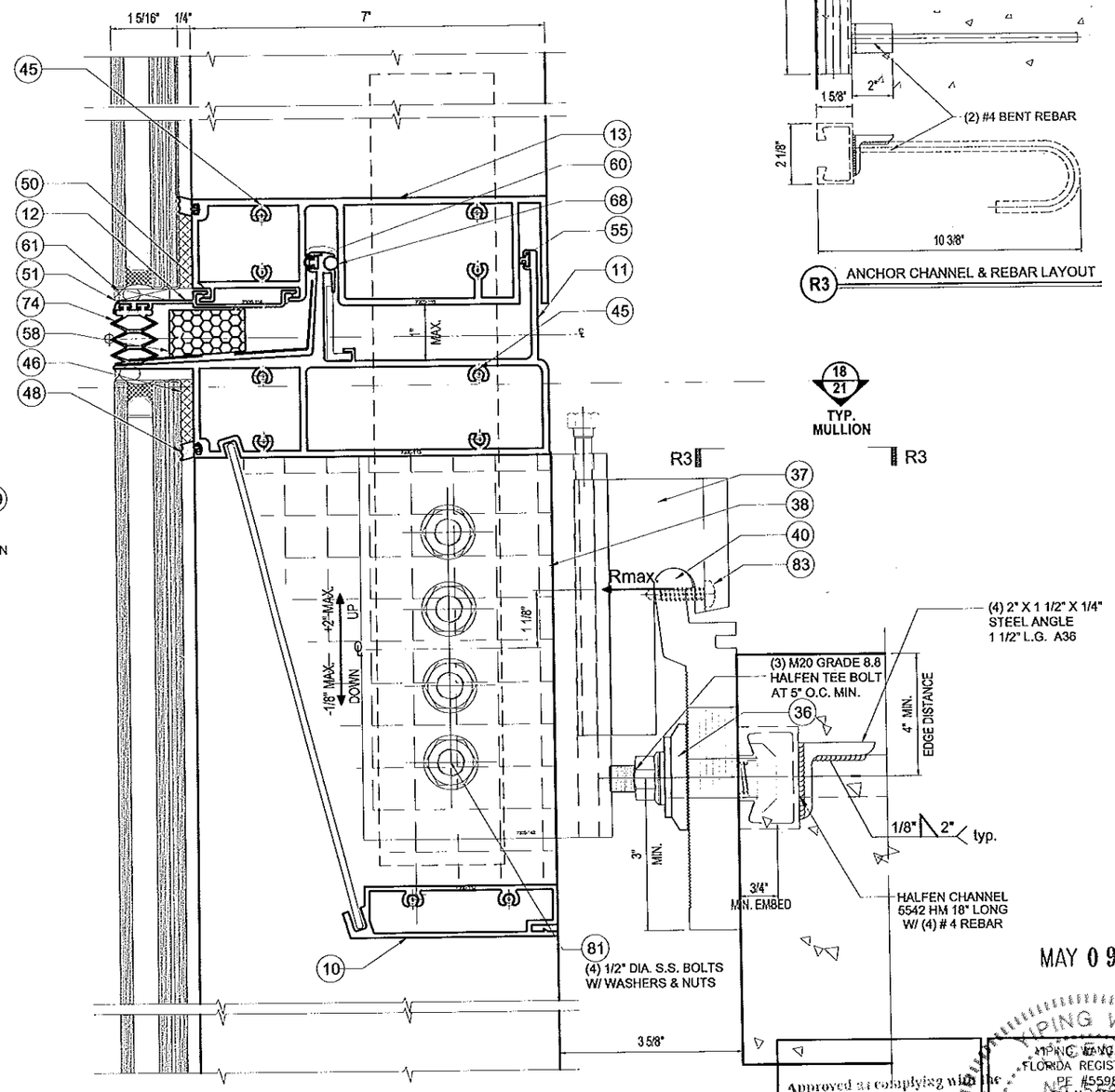

19/21 EXP. JOINT - ANCHOR TYPE C-1
SECTION

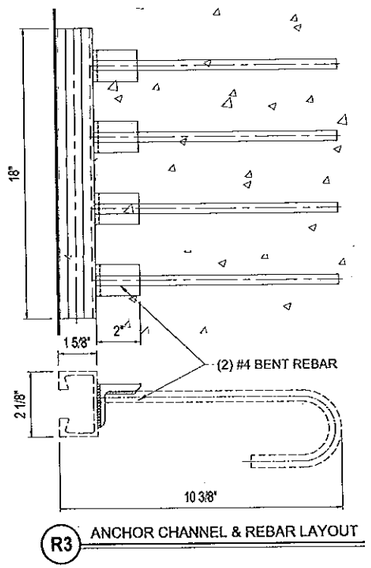

R3 ANCHOR CHANNEL & REBAR LAYOUT

REVISIONS		
NO.	DATE	DESCRIPTION

MCY ENGINEERING, INC.
GLAZING CONSULTANTS
8501 SW 124 AVE. SUITE 205A
MIAMI, FL 33183
P: 305.271.0117
F: 305.921.4786
www.MCYEngineering.com
MCY.Engineering@Att.net

SERIES 7000 ALUMINUM CURTAIN WALL - SMI

GLASSWALL, LLC.

3550 N.W. 49 STREET, MIAMI, FLORIDA 33142
Phone (305) 638 5151 Fax (305) 638 5158

MAY 09 2013

Approved as complying with the Florida Building Code
Date June 10, 2013
NOA# 12-1106.05
Miami Dade Product Control
By
MIAMI DADE COUNTY

YIPING WANG
YIPING WANG, P.E.
FLORIDA REGISTRATION
NO. #55983
C.A.N. 25673
STATE OF FLORIDA
PROFESSIONAL ENGINEER

DATE	05/09/2013
SCALE	AS NOTED
DRAWN	A.R.
PROJECT	MCY12-143

DRAWING NO.
AD12-65

SHEET 21 OF 38

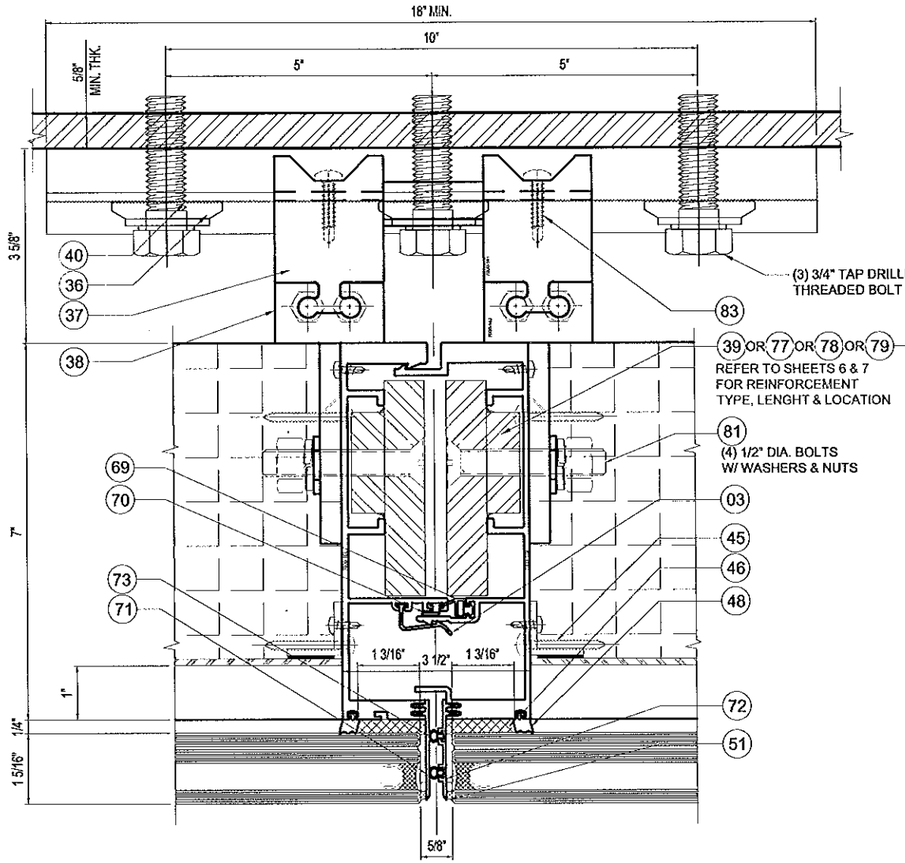

20/22 TYP. MULLION - ANCHOR TYPE D

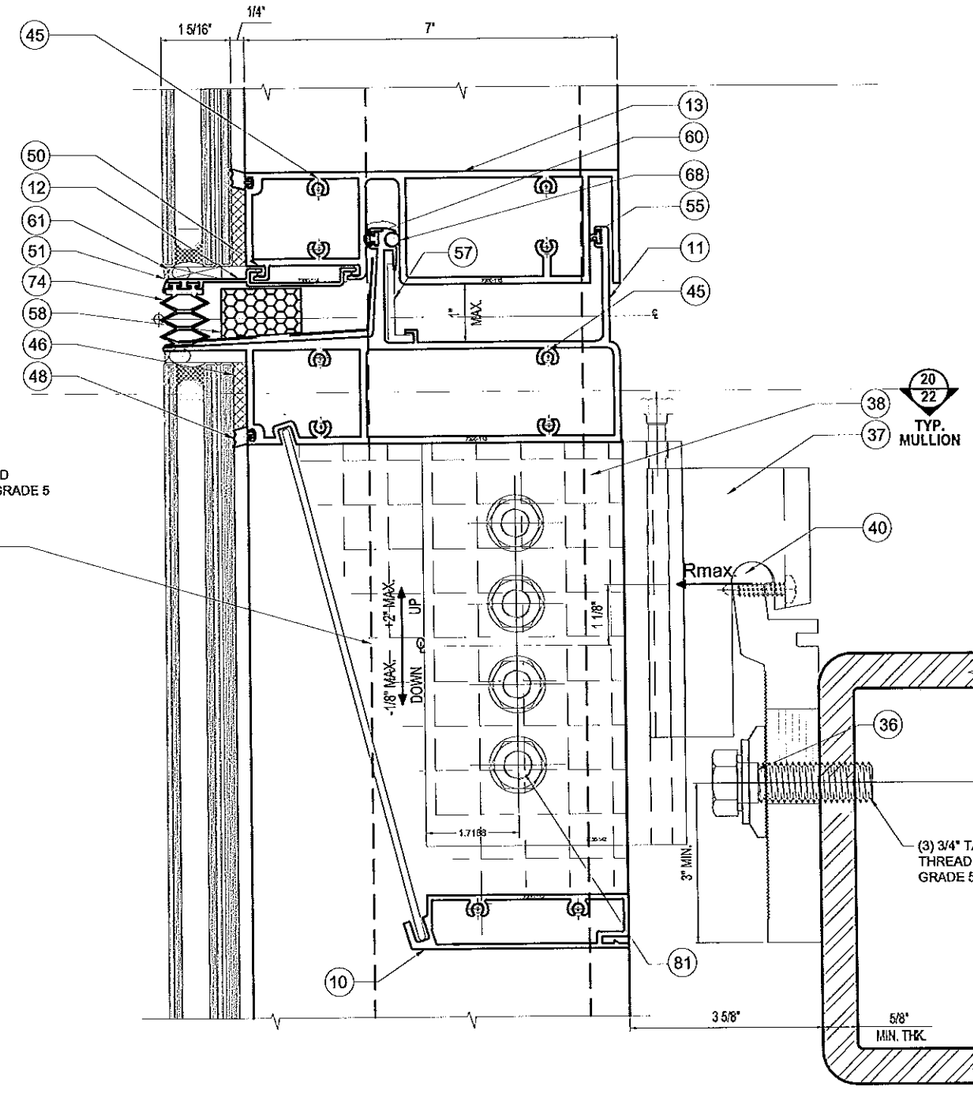

21/22 EXP. JOINT - ANCHOR TYPE D SECTION

MAY 09 2013

Approved as complying with the Florida Building Code
Date June 10, 2013
NOA# 12-1126.05
Miami Dade Product Control
By Manuel Perez
MIAMI DADE COUNTY

YIPING WANG, P.E.
FLORIDA REGISTRATION
PE #55983
C.N.A. 26573

STATE OF FLORIDA PROFESSIONAL ENGINEER

REVISIONS		
NO.	DATE	DESCRIPTION

MCY ENGINEERING, INC.
GLAZING CONSULTANTS
8501 SW 124 AVE. SUITE 205A
MIAMI, FL 33183
P: 305.271.0117
F: 305.921.4786
www.MCYEngineering.com
MCY.Engineering@Att.net

SERIES 7000 ALUMINUM CURTAIN WALL - SMI

GLASSWALL, LLC.

3550 N.W. 49 STREET. MIAMI, FLORIDA 33142
Phone (305) 638 5151 Fax (305) 638 5158

DATE	05/09/2013
SCALE	AS NOTED
DRAWN	A.R.
PROJECT	MCY12-143

DRAWING NO. AD12-65

SHEET 22 OF 38

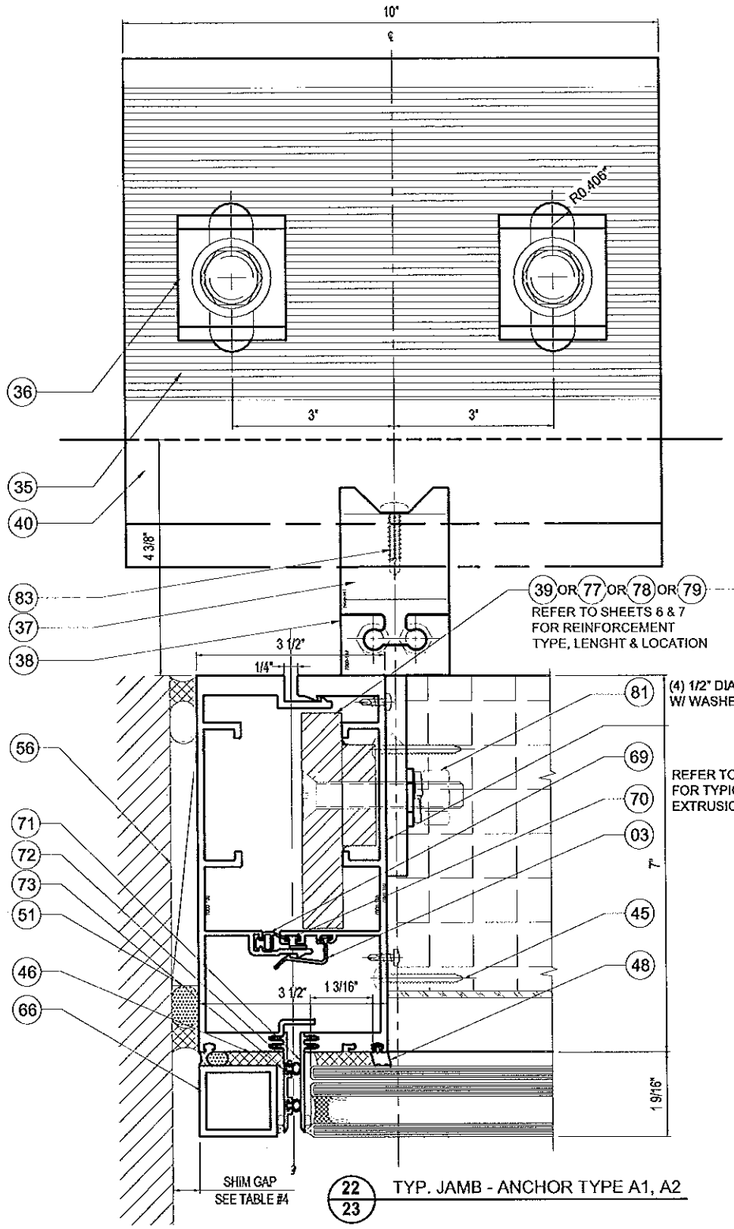

22/23 TYP. JAMB - ANCHOR TYPE A1, A2

TABLE #4: MIN/MAX SHIM GAP

JAMB SPAN*	MIN. GAP	MAX. GAP
≤ 120"	0.38"	0.75"
132"	0.42"	0.75"
144"	0.46"	0.75"
156"	0.5"	0.75"
168"	0.54"	0.75"
180"	0.58"	0.75"
192"	0.62"	0.75"
204"	0.65"	0.75"
208"	0.67"	0.75"

*JAMB SPAN: - ANCHOR ℄ TO ℄

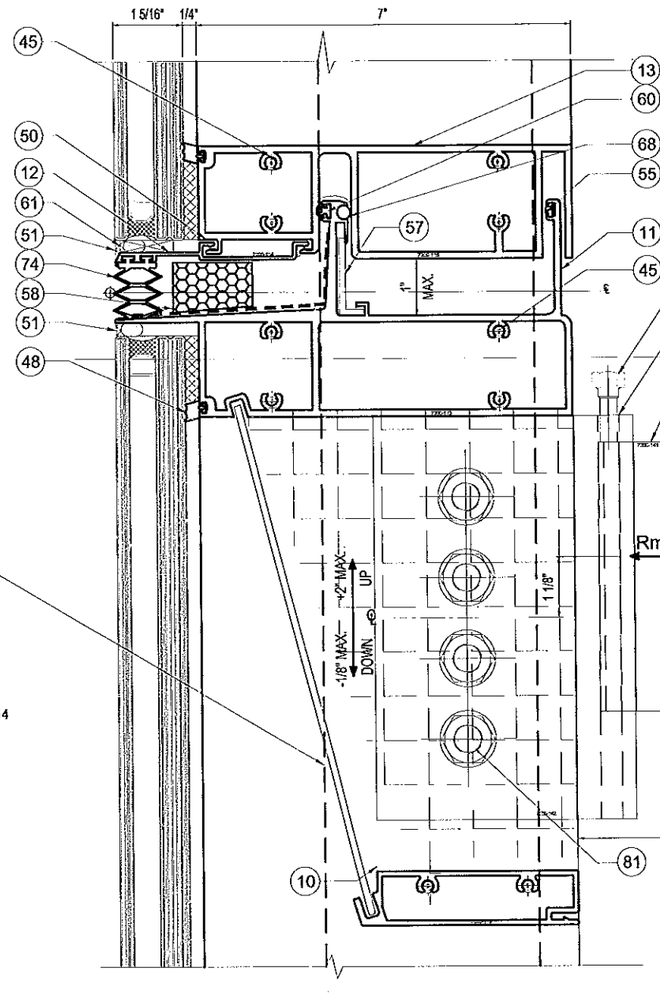

23/23 JAMB EXP. JOINT - ANCHOR TYPE A1, A2
SECTION

	SPAN	MAX. DESIGN LOAD (PSF) MULLION SPACING (M.S.)				
		36	42	48	54	60
	(in)	(in)	(in)	(in)	(in)	(in)
TYPE A1	120	140	140	130	116	104
	126	140	140	124	110	99
	132	140	136	119	105	95
	138	140	130	113	101	91
	144	140	124	109	97	87
TYPE A2	120	140	140	140	140	140
	126	140	140	140	140	140
	132	140	140	140	140	140
	138	140	140	140	140	140
	144	140	140	140	140	140

Approved as complying with Florida Building Code
Date June 6, 2013
NOA# 12-1126.05
Miami Dade Product Control
By Manuel Cruz
MIAMI DADE COUNTY

YIPING WANG, P.E.
FLORIDA REGISTRATION
PE #55983
C.A.N. 2655983
STATE OF FLORIDA
PROFESSIONAL ENGINEER

MAY 09 2013

NO	DATE	DESCRIPTION

MCY ENGINEERING, INC.
GLAZING CONSULTANTS
8501 SW 124 AVE. SUITE 205A
MIAMI, FL 33183
P: 305.271.0117
F: 305.921.4786
www.MCYEngineering.com
MCY.Engineering@Att.net

SERIES 7000 ALUMINUM CURTAIN WALL - SMI

GLASSWALL, LLC.

3550 N.W. 49 STREET. MIAMI, FLORIDA 33142
Phone (305) 638 5151 Fax (305) 638 5158

DATE	05/09/2013
SCALE	AS NOTED
DRAWN	A.R.
PROJECT	MCY12-143

DRAWING NO.
AD12-65

SHEET 23 OF 38

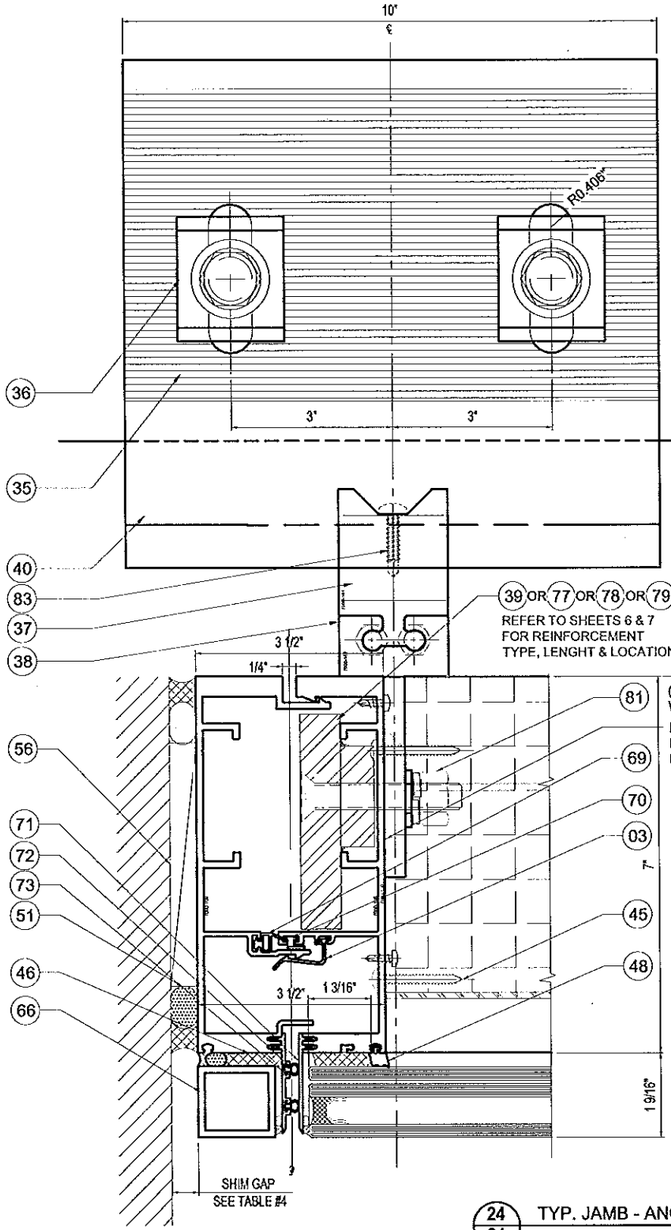

24/24 TYP. JAMB - ANCHOR TYPE B1

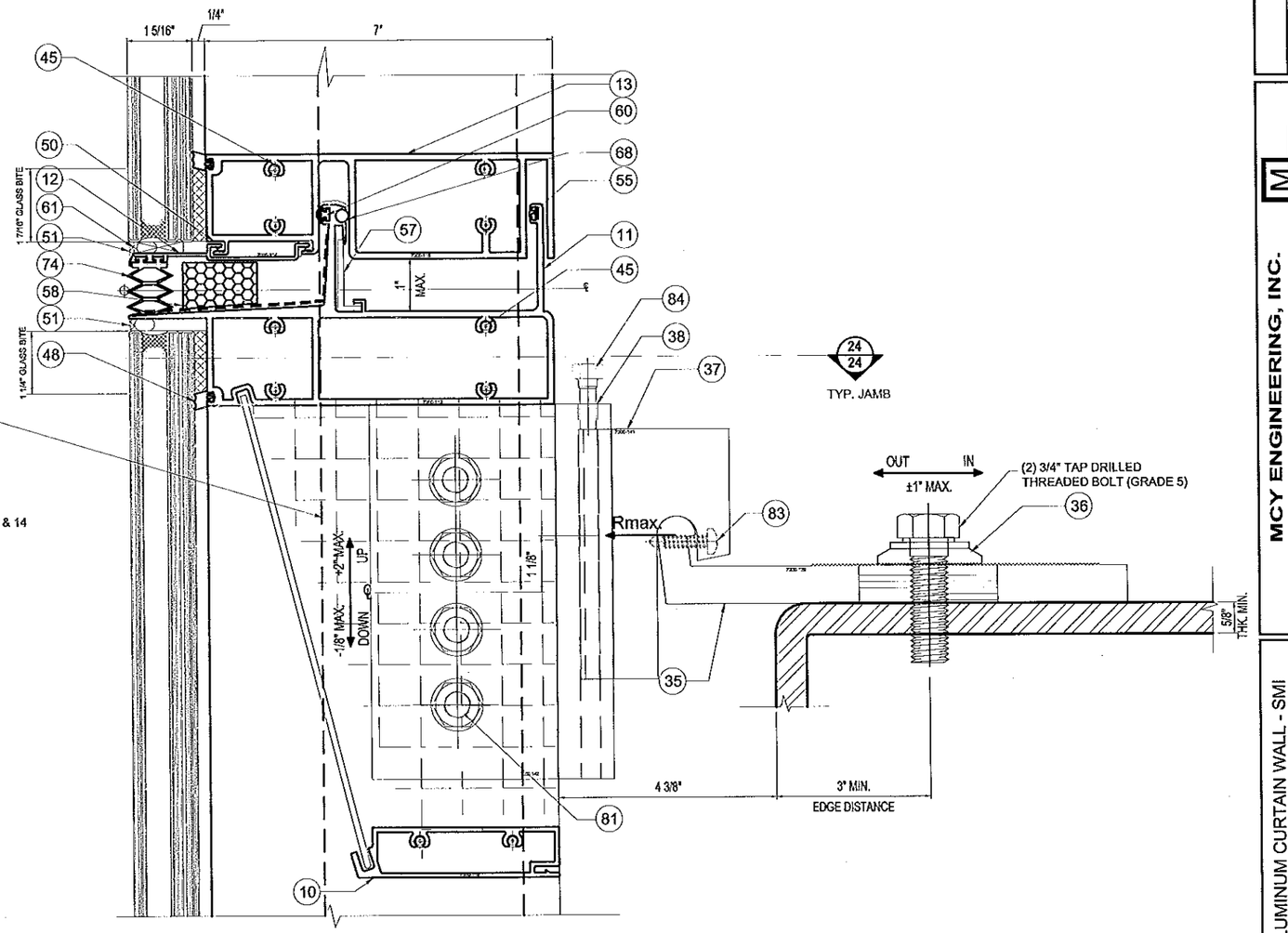

25/24 JAMB EXP. JOINT - ANCHOR TYPE B1
SECTION

TABLE #4: MIN/MAX SHIM GAP

JAMB SPAN*	MIN. GAP	MAX. GAP
≤ 120"	0.38"	0.75"
132"	0.42"	0.75"
144"	0.46"	0.75"
156"	0.5"	0.75"
168"	0.54"	0.75"
180"	0.58"	0.75"
192"	0.62"	0.75"
204"	0.65"	0.75"
208"	0.67"	0.75"

*JAMB SPAN: - ANCHOR ℄ TO ℄

MAY 09 2013

Approved as complying with the Florida Building Code
Date June 6 2013
NOA# 12-1126.05
Miami Dade Product Control
By Manuel [illegible]
MIAMI DADE COUNTY

YIPING WANG, P.E.
FLORIDA REGISTRATION
PE #58383
C.A.N. 28677
STATE OF FLORIDA
PROFESSIONAL ENGINEER

REVISIONS

NO.	DATE	DESCRIPTION

MCY ENGINEERING, INC.
GLAZING CONSULTANTS
8501 SW 124 AVE. SUITE 205A
MIAMI, FL. 33183
P: 305.271.0117
F: 305.921.4786
www.MCYEngineering.com
MCY.Engineering@Att.net

SERIES 7000 ALUMINUM CURTAIN WALL - SMI

GLASSWALL, LLC.
3550 N.W. 49 STREET. MIAMI, FLORIDA 33142
Phone (305) 638 5151 Fax (305) 638 5158

DATE	05/09/2013
SCALE	AS NOTED
DRAWN	A.R.
PROJECT	MCY12-143

DRAWING NO.
AD12-65

SHEET 24 OF 38

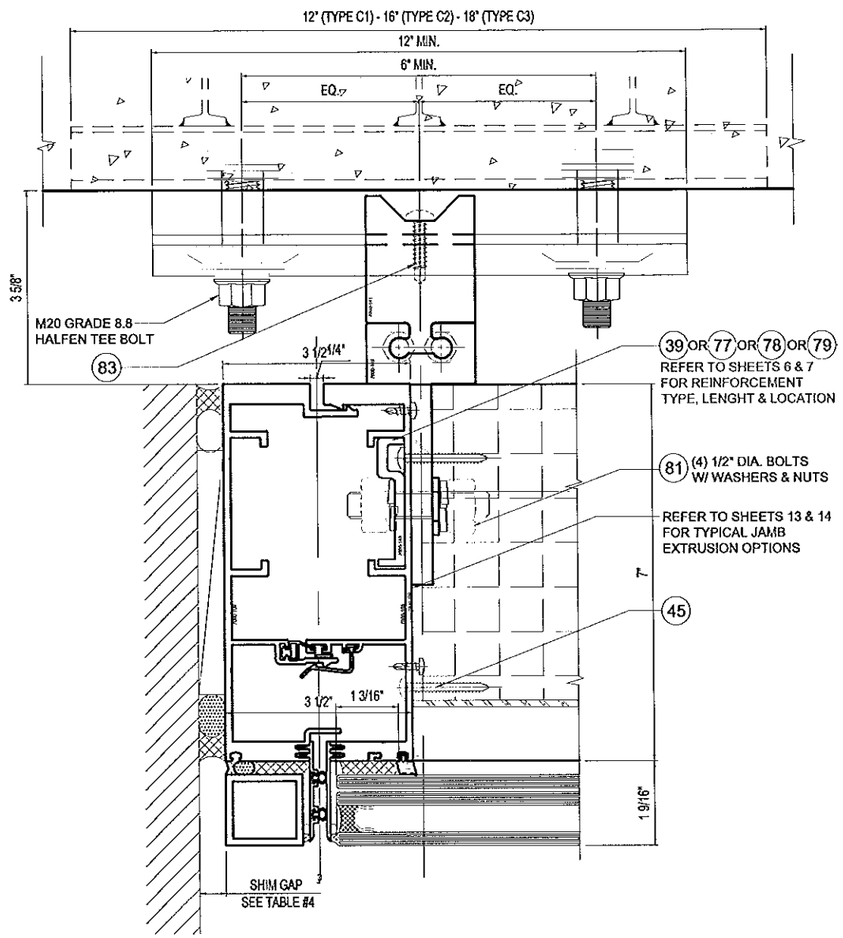

26/25 TYP. JAMB - ANCHOR TYPE C1, C2, C3

	SPAN	MAX. DESIGN LOAD (PSF) MULLION SPACING (M.S.)				
		36	42	48	54	60
	(in)	(in)	(in)	(in)	(in)	(in)
TYPE C1	120	140	140	140	140	140
	126	140	140	140	140	139
	132	140	140	140	140	133
	138	140	140	140	140	127
	144	140	140	140	135	122
TYPE C2	120	140	140	140	140	140
	126	140	140	140	140	140
	132	140	140	140	140	140
	138	140	140	140	140	140
	144	140	140	140	140	136
TYPE C3	120	140	140	140	140	140
	126	140	140	140	140	140
	132	140	140	140	140	140
	138	140	140	140	140	140
	144	140	140	140	140	140

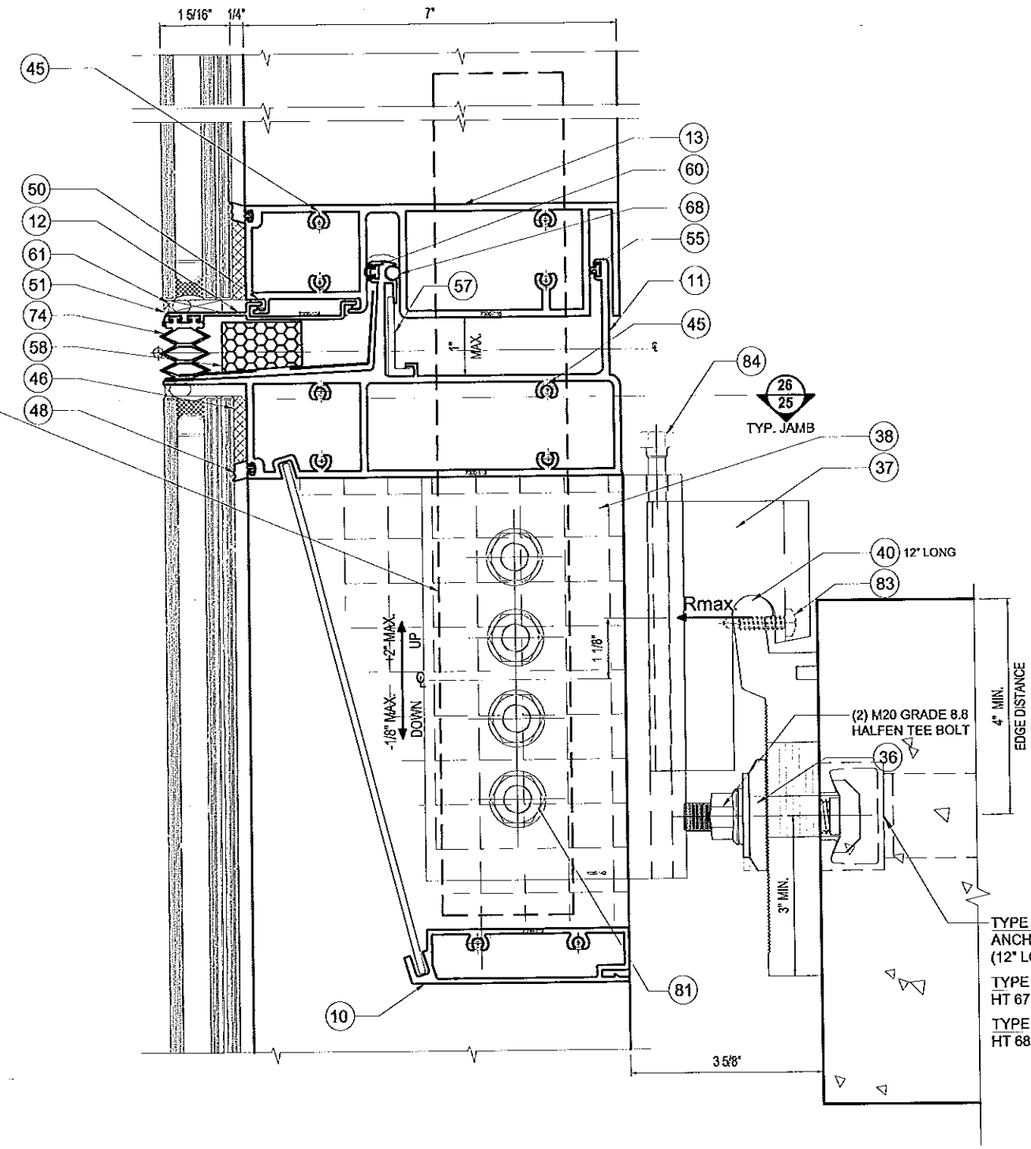

27/25 JAMB EXP. JOINT - ANCHOR TYPE C1, C2, C3
SECTION

MAY 09 2013

Approved as complying with the
Florida Building Code
Date June 6, 2013
NOA# 12-1126.05
Miami Dade Product Control
By
MIAMI DADE COUNTY

YIPING WANG
LICENSE
YIPING WANG, P.E.
FLORIDA REGISTRATION
NO. 59933
C.A.N. 28677
STATE OF FLORIDA

REVISIONS

NO.	DATE	DESCRIPTION

MCY ENGINEERING, INC.
GLAZING CONSULTANTS
8501 SW 124 AVE. SUITE 205A
MIAMI, FL 33183
P: 305.271.0117
F: 305.921.4786
www.MCYEngineering.com
MCY.Engineering@Att.net

SERIES 7000 ALUMINUM CURTAIN WALL - SMI

GLASSWALL, LLC.

3550 N.W. 49 STREET. MIAMI, FLORIDA 33142
Phone (305) 638 5151 Fax (305) 638 5158

DATE	05/09/2013
SCALE	AS NOTED
DRAWN	A.R.
PROJECT	MCY12-143

DRAWING NO.
AD12-65

SHEET 25 OF 38

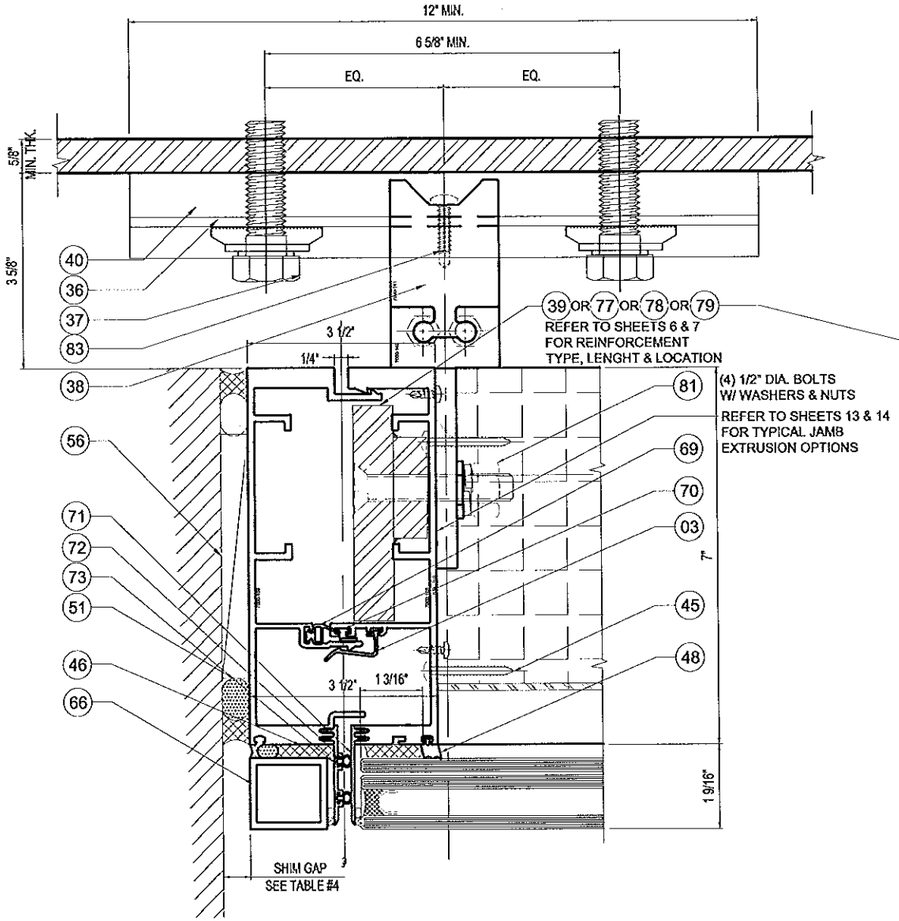

28/26 TYP. JAMB - ANCHOR TYPE D1

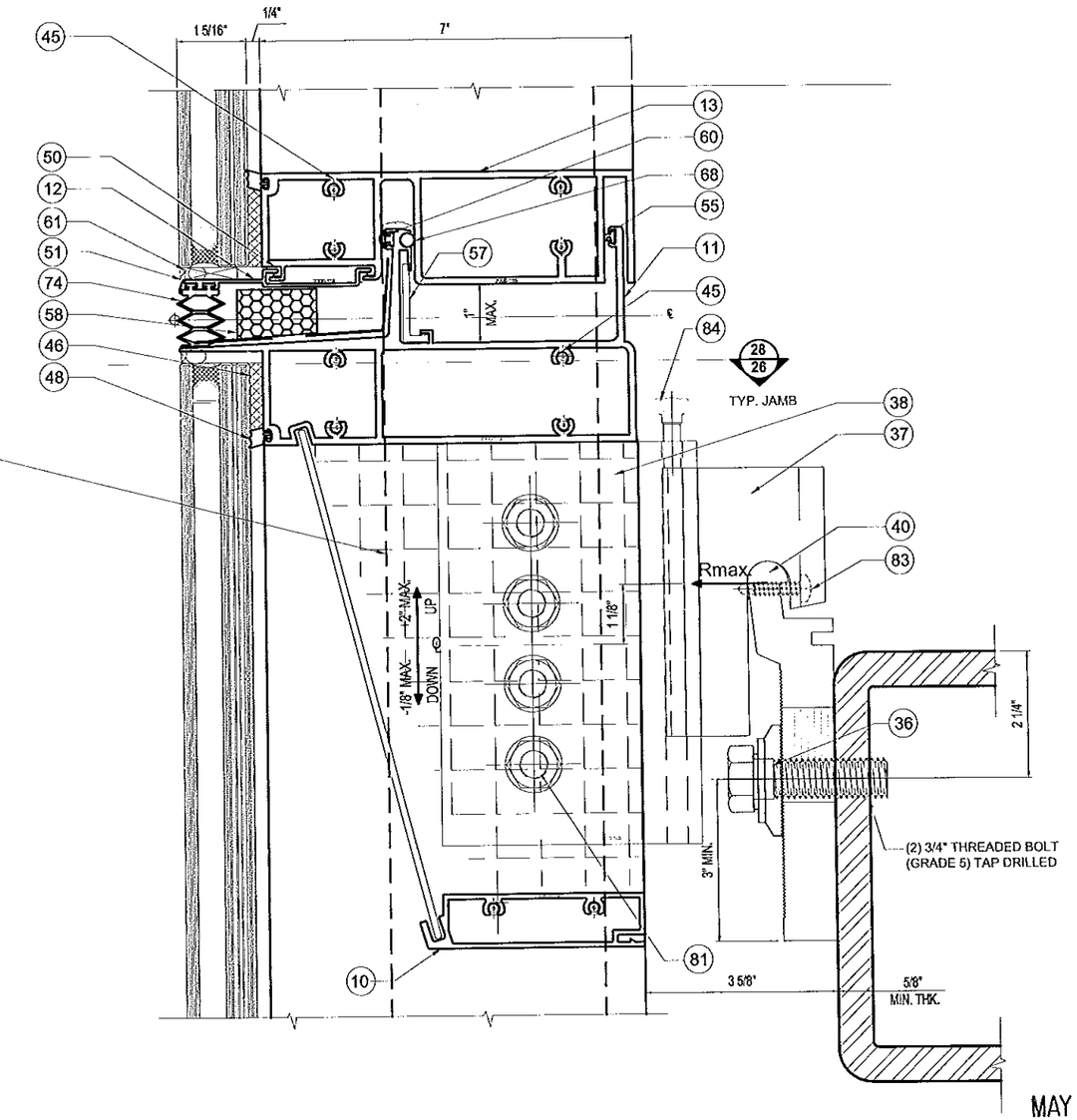

29/26 JAMB EXP. JOINT - ANCHOR TYPE D1
SECTION

REVISIONS		
NO.	DATE	DESCRIPTION

MCY ENGINEERING, INC.
GLAZING CONSULTANTS
8501 SW 124 AVE. SUITE 205A
MIAMI, FL 33183
P: 305.271.0117
F: 305.921.4786
www.MCYEngineering.com
MCY.Engineering@Att.net

SERIES 7000 ALUMINUM CURTAIN WALL - SMI

GLASSWALL, LLC.
3550 N.W. 49 STREET. MIAMI, FLORIDA 33142
Phone (305) 638 5151 Fax (305) 638 5158

MAY 09 2013

Approved as complying with the
Florida Building Code
Date June 6, 2013
NOA# 12-1226.05
Miami Dade Product Control
By Manuel Cruz
MIAMI DADE COUNTY

YIPING WANG
LICENSE
YIPING WANG, P.E.
FLORIDA REGISTRATION
NO. #55983
C.A.N. 28677
STATE OF FLORIDA
PROFESSIONAL ENGINEER

DATE	05/09/2013
SCALE	AS NOTED
DRAWN	A.R.
PROJECT	MCY12-143

DRAWING NO.
AD12-65

SHEET 26 OF 38

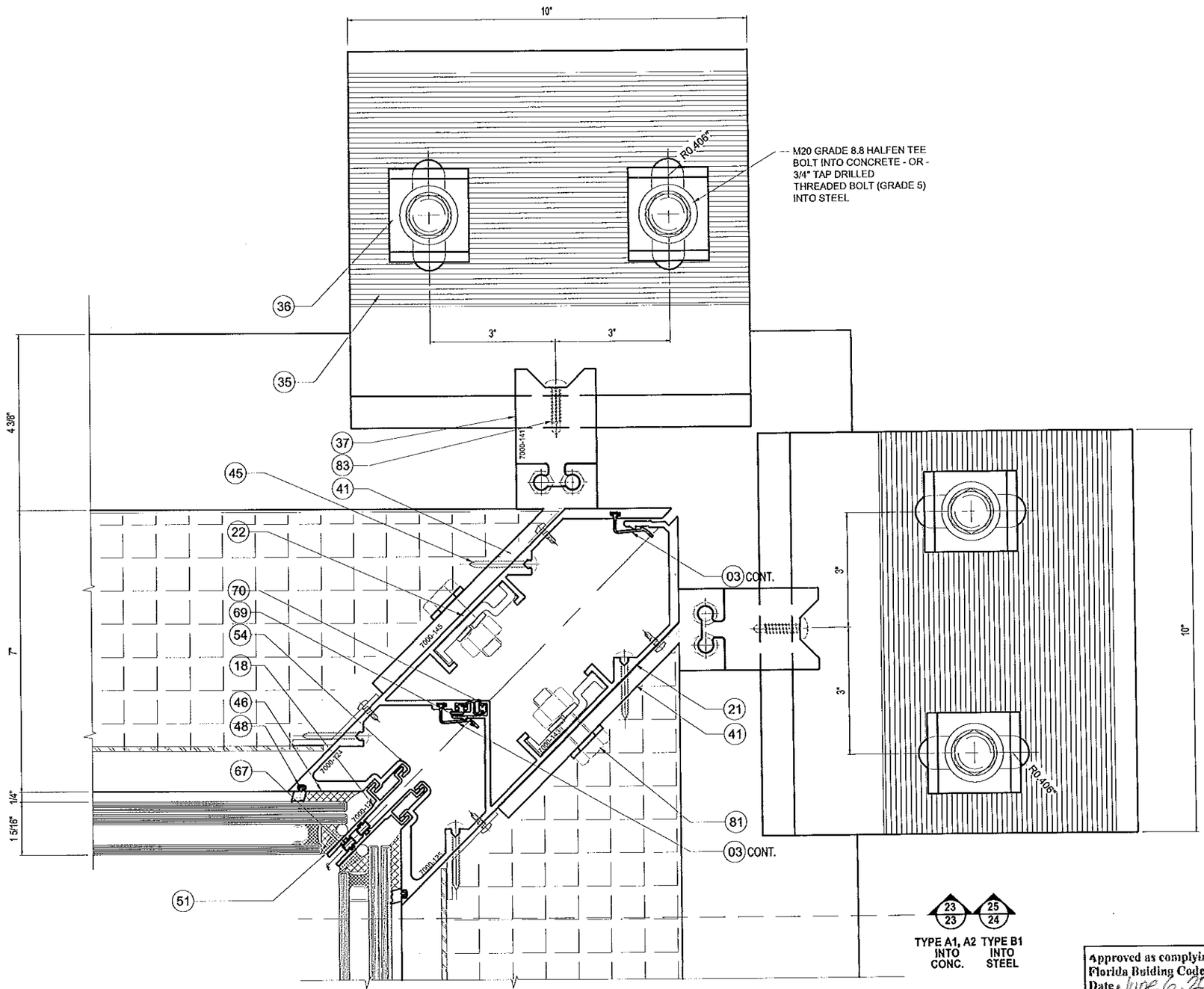

30/27 INSIDE CORNER MULL. - ANCHOR TYPE A1, A2 OR B1

REVISIONS		
NO.	DATE	DESCRIPTION

MCY ENGINEERING, INC.
GLAZING CONSULTANTS
8501 SW 124 AVE. SUITE 205A MIAMI, FL 33183
P: 305.271.0117
F: 305.921.4786
www.MCYEngineering.com
MCY.Engineering@Att.net

SERIES 7000 ALUMINUM CURTAIN WALL - SMI

GLASSWALL, LLC.
3550 N.W. 49 STREET. MIAMI, FLORIDA 33142
Phone (305) 638 5151 Fax (305) 638 5158

MAY 09 2013

Approved as complying with the Florida Building Code
Date: June 12, 2013
NOA# 12-1226.05
Miami Dade Product Control
By
MIAMI DADE COUNTY

YIPING WANG LICENSE
YIPING WANG, P.E.
FLORIDA REGISTRATION
PE #55983
C.A.N. 28677
STATE OF FLORIDA PROFESSIONAL ENGINEER

DATE	05/09/2013
SCALE	AS NOTED
DRAWN	A.R.
PROJECT	MCY12-143

DRAWING NO.
AD12--65

SHEET 27 OF 38

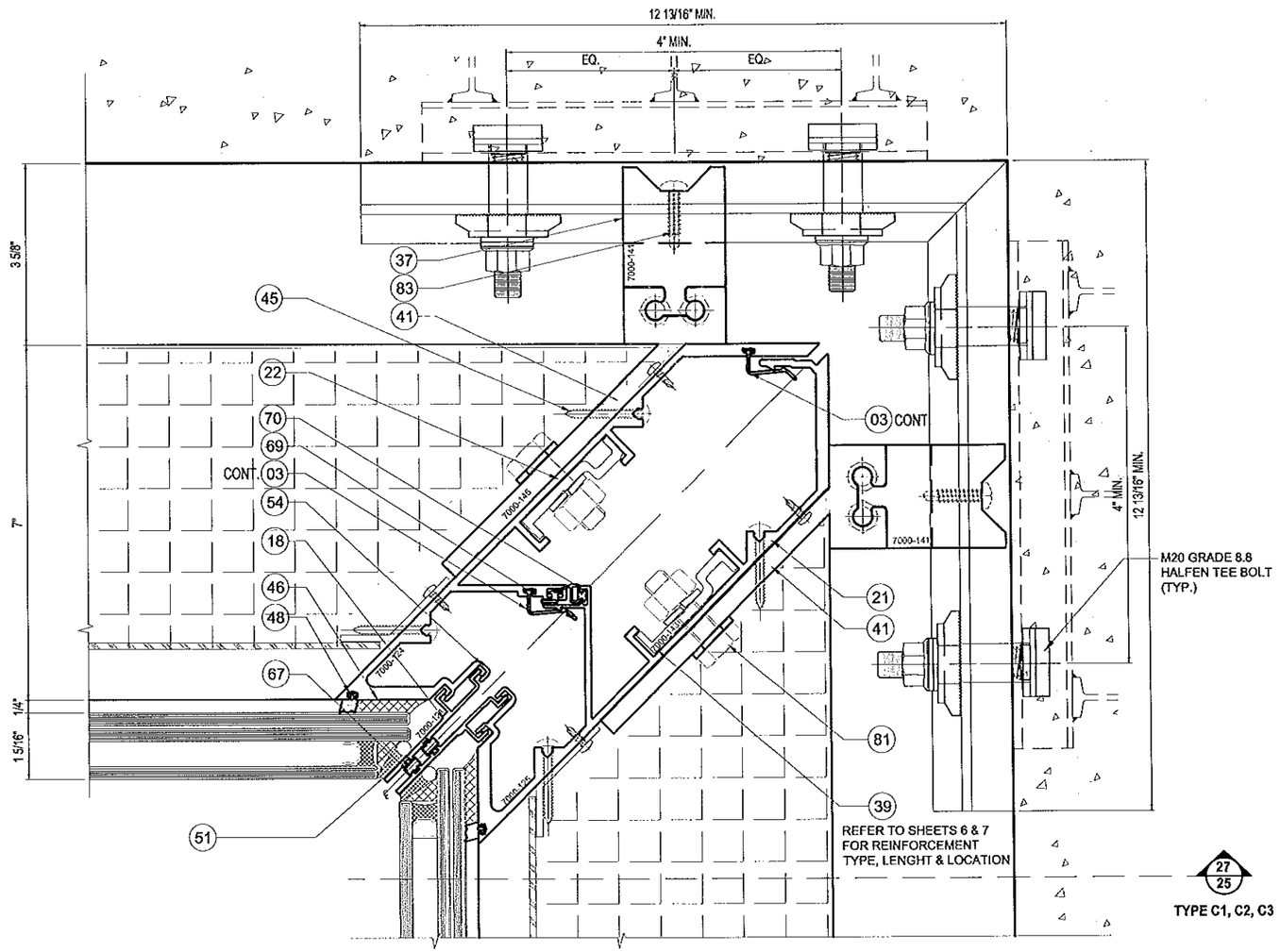

31/28 INSIDE CORNER MULL. - ANCHOR TYPE C1, C2, C3

MAY 09 2013

Approved as complying with the Florida Building Code
Date June 6 2013
NOA# 12-1226.05
Miami Dade Product Control
By Manuel Perez
MIAMI DADE COUNTY

YIPING WANG LICENSE STATE OF FLORIDA PROFESSIONAL ENGINEER

YIPING WANG, P.E.
FLORIDA REGISTRATION
PE #55983
C.A.N. 28677

REVISIONS		
NO.	DATE	DESCRIPTION

MCY ENGINEERING, INC.
GLAZING CONSULTANTS
8501 SW 124 AVE. SUITE 205A P: 305.271.0117
MIAMI, FL 33183 F: 305.921.4786
www.MCYEngineering.com MCY.Engineering@Att.net

SERIES 7000 ALUMINUM CURTAIN WALL - SMI

GLASSWALL, LLC.
3550 N.W. 49 STREET. MIAMI, FLORIDA 33142
Phone (305) 638 5151 Fax (305) 638 5158

DATE	05/09/2013
SCALE	AS NOTED
DRAWN	A.R.
PROJECT	MCY12-143

DRAWING NO.
AD12-65

SHEET 28 OF 38

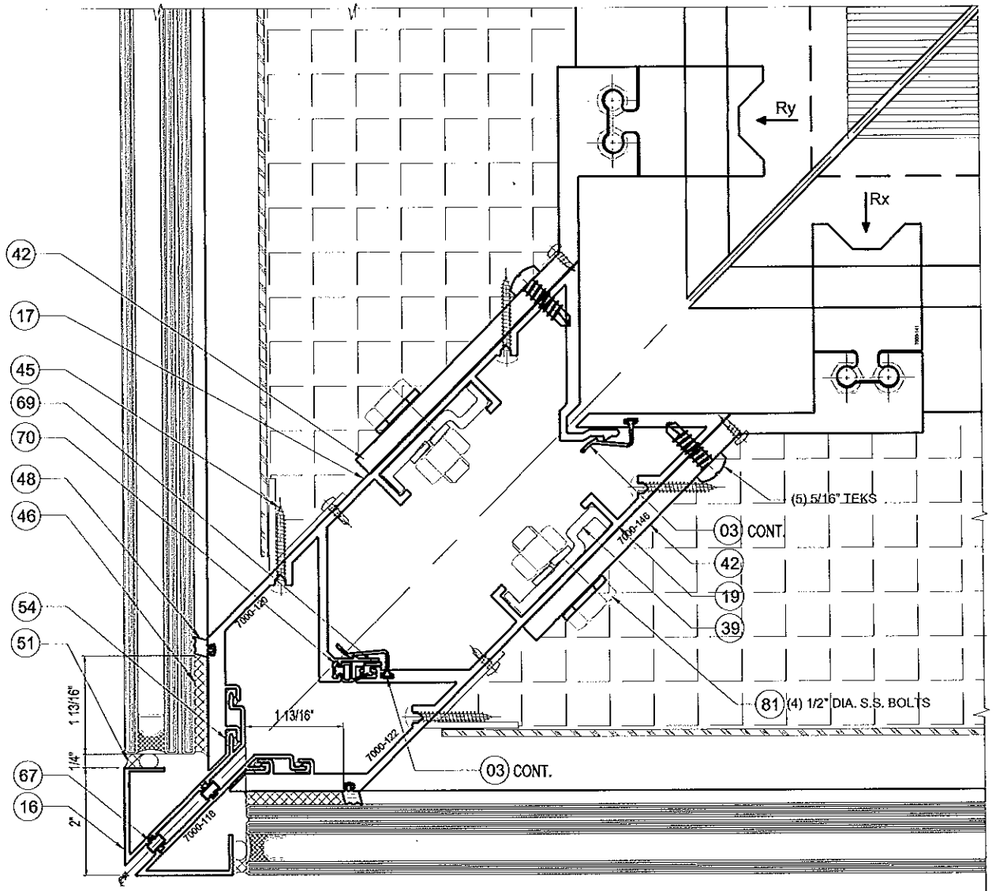

33/30 MULLION CLIP ANCHOR OPTION 1
Rx ≤ 2600 lbs

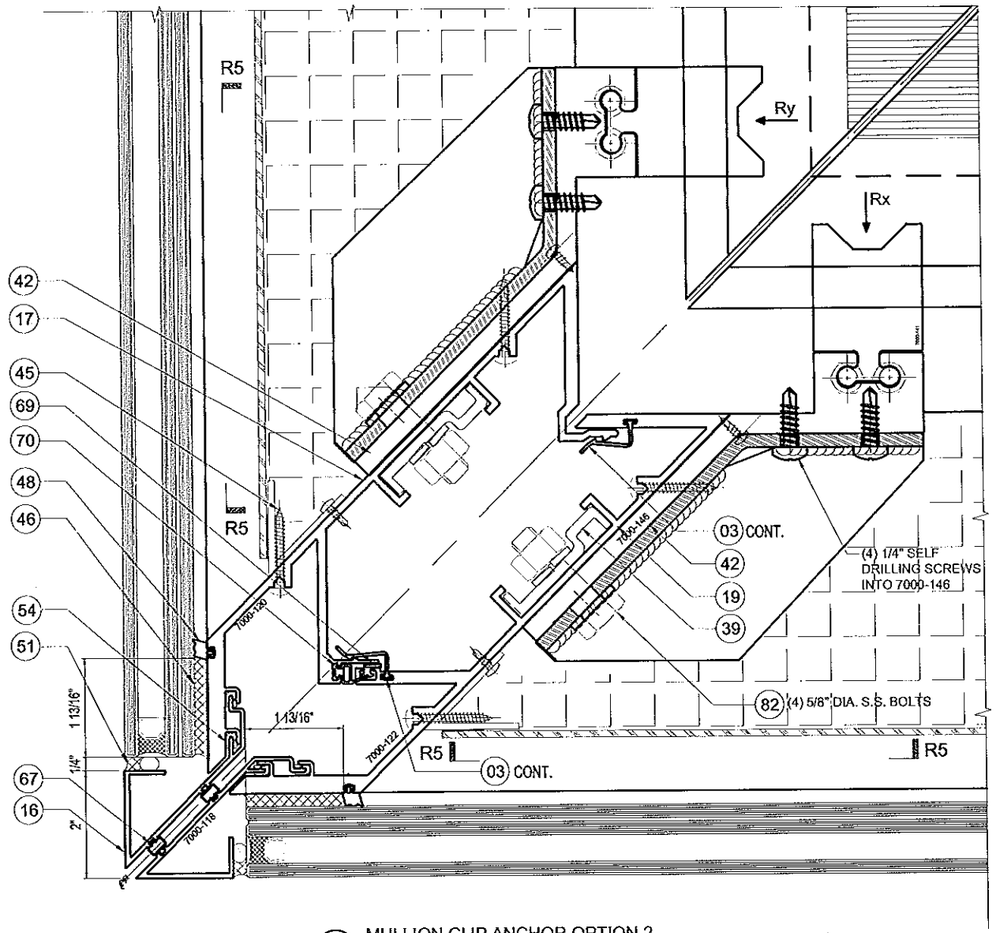

33/30 MULLION CLIP ANCHOR OPTION 2
2600 lbs < Rx or Ry

MULLION CLIP ANCHOR OPTION						
	MAX. DESIGN LOAD (PSF)					
	SPAN	MULLION SPACING (M.S.)				
		36	42	48	54	60
	(in)	(in)	(in)	(in)	(in)	(in)
OPTION1	120	140	129	113	100	90
	126	140	123	108	96	86
	132	137	117	103	91	82
	138	131	112	98	87	79
	144	126	108	94	84	75
OPTION 2	120	140	140	140	140	140
	126	140	140	140	140	140
	132	140	140	140	140	140
	138	140	140	140	140	140
	144	140	140	140	140	140

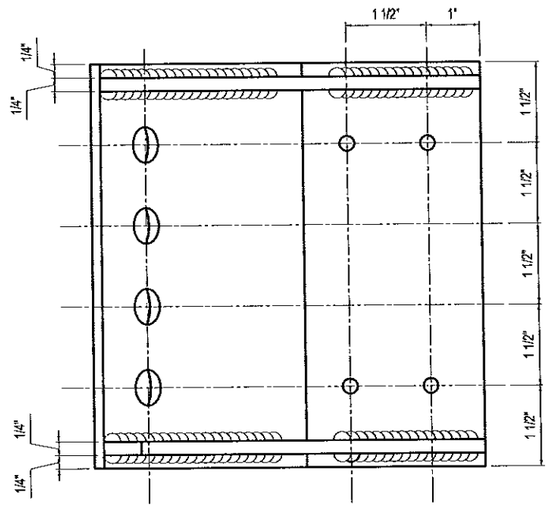

R5 - STEEL ANCHOR CLIP DETAIL

MAY 0 9 2013

Approved as complying with the Florida Building Code
Date June 6 2013
NOA# 12-1126.05
Miami Dade Product Control
By [signature]
MIAMI DADE COUNTY

YIPING WANG, P.E.
FLORIDA REGISTRATION
PE #55983
C.A.N. 28677
STATE OF FLORIDA

REVISIONS		
NO.	DATE	DESCRIPTION

MCY ENGINEERING, INC.
GLAZING CONSULTANTS
8501 SW 124 AVE. SUITE 205A
MIAMI, FL 33183
P: 305.271.0117
F: 305.921.4786
www.MCYEngineering.com
MCY.Engineering@Att.net

SERIES 7000 ALUMINUM CURTAIN WALL - SMI

GLASSWALL, LLC.
3550 N.W. 49 STREET. MIAMI, FLORIDA 33142
Phone (305) 638 5151 Fax (305) 638 5158

DATE	05/09/2013
SCALE	AS NOTED
DRAWN	A.R.
PROJECT	MCY12-143

DRAWING NO.
AD12-65

SHEET 30 OF 38

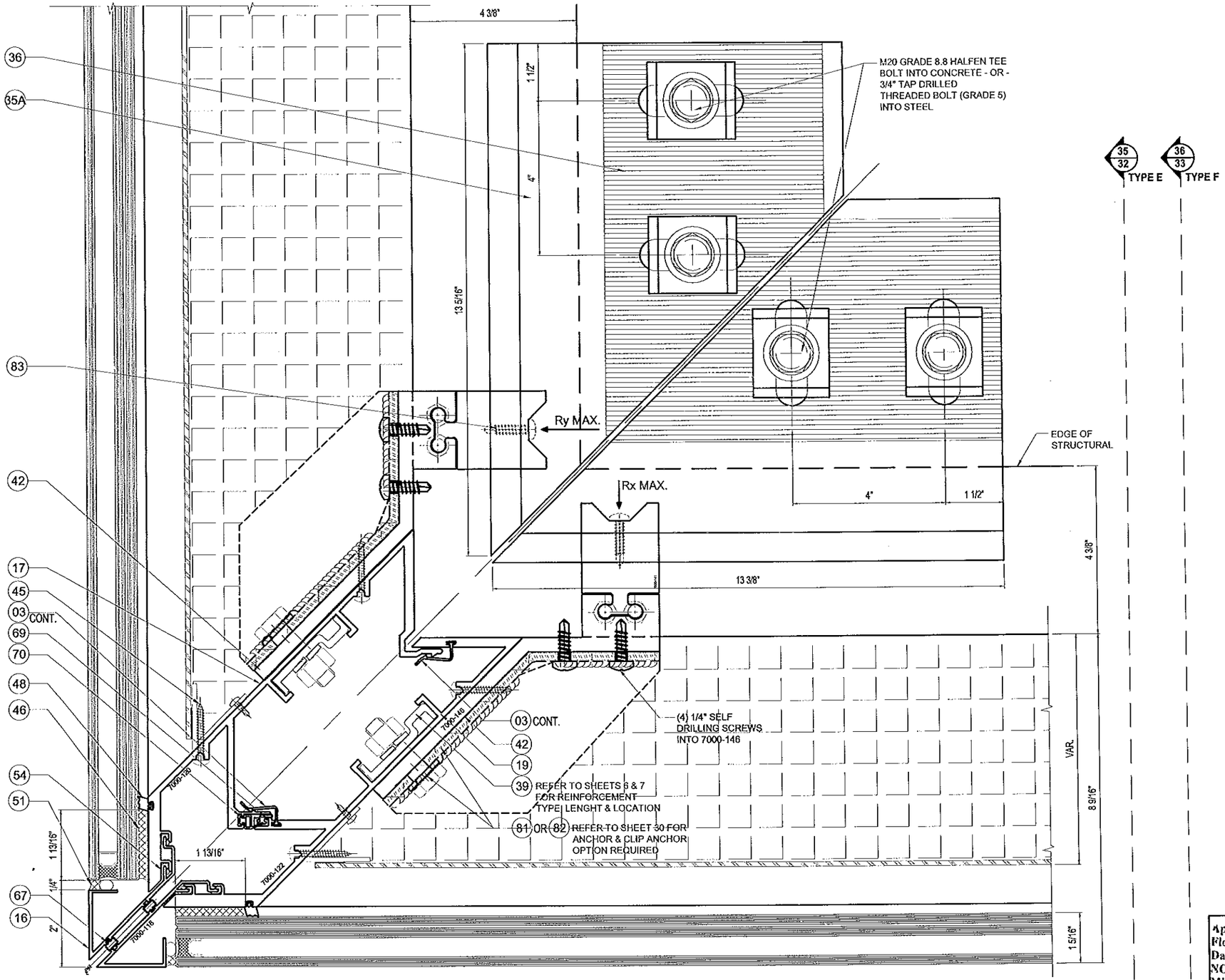

34 31 OUTSIDE CORNER MULL. ANCHOR TYPE E OR F

MAY 0 9 2013

Approved as complying with the Florida Building Code
Date June 6, 2013
NOA# 12-1126.05
Miami Dade Product Control
By Manuel Perez
MIAMI DADE COUNTY

XIPING WANG, P.E.
FLORIDA REGISTRATION
P.E. #55983
C.A.N. 28697
STATE OF FLORIDA PROFESSIONAL ENGINEER

REVISIONS		
NO.	DATE	DESCRIPTION

MCY ENGINEERING, INC.
GLAZING CONSULTANTS
8501 SW 124 AVE. SUITE 205A
MIAMI, FL. 33183
P: 305.271.0117
F: 305.921.4786
www.MCYEngineering.com
MCY.Engineering@Att.net

SERIES 7000 ALUMINUM CURTAIN WALL - SMI

GLASSWALL, LLC.
3550 N.W. 49 STREET, MIAMI, FLORIDA 33142
Phone (305) 638 5151 Fax (305) 638 5158

DATE	05/09/2013
SCALE	AS NOTED
DRAWN	A.R.
PROJECT	MCY12-143

DRAWING NO. AD12-65

SHEET 31 OF 38

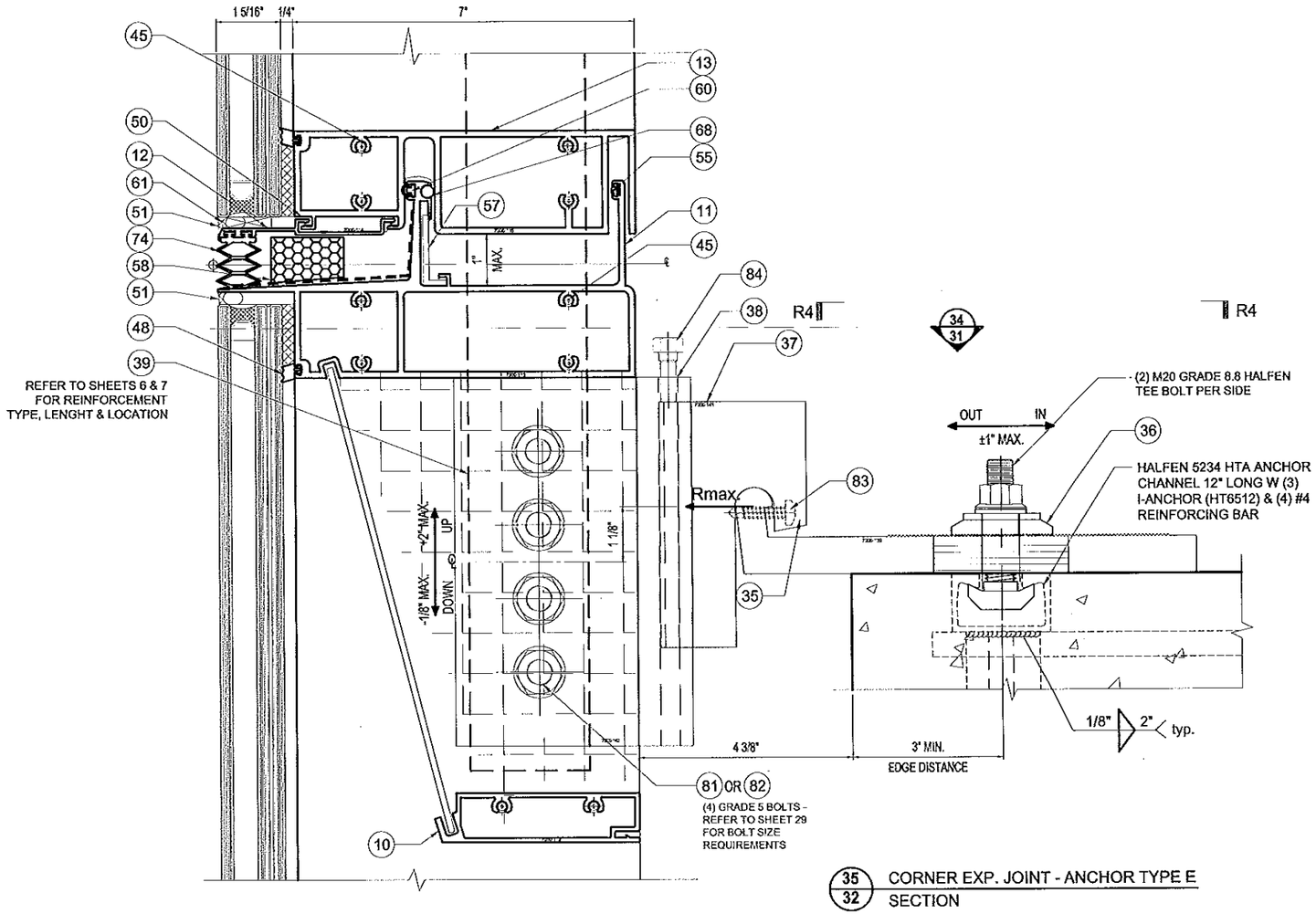

35/32 CORNER EXP. JOINT - ANCHOR TYPE E
SECTION

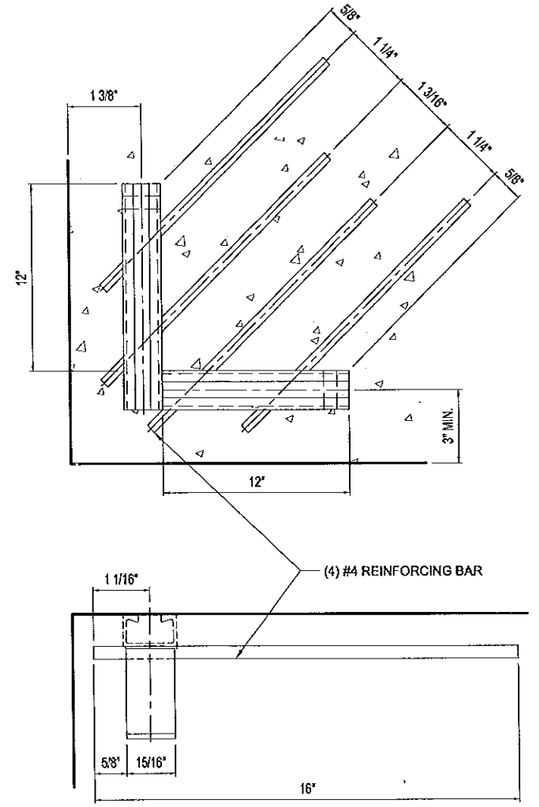

R4 ANCHOR TYPE E

MAY 09 2013

Approved as complying with the
Florida Building Code
Date June 6, 2013
NOA# 12-1126.05
Miami Dade Product Control
By Manuel Perez
MIAMI DADE COUNTY

YIPING WANG, P.E.
FLORIDA REGISTRATION
NO. 55883
C.A.N. 28677
STATE OF FLORIDA
PROFESSIONAL ENGINEER

REVISIONS

NO.	DATE	DESCRIPTION

MCY ENGINEERING, INC.
GLAZING CONSULTANTS
8501 SW 124 AVE. SUITE 205A
MIAMI, FL. 33183
P: 305.271.0117
F: 305.921.4786
www.MCYEngineering.com
MCY.Engineering@Att.net

SERIES 7000 ALUMINUM CURTAIN WALL - SMI

GLASSWALL, LLC.
3550 N.W. 49 STREET. MIAMI, FLORIDA 33142
Phone (305) 638 5151 Fax (305) 638 5158

DATE	05/09/2013
SCALE	AS NOTED
DRAWN	A.R.
PROJECT	MCY12-143

DRAWING NO.
AD12-65

SHEET 32 OF 38

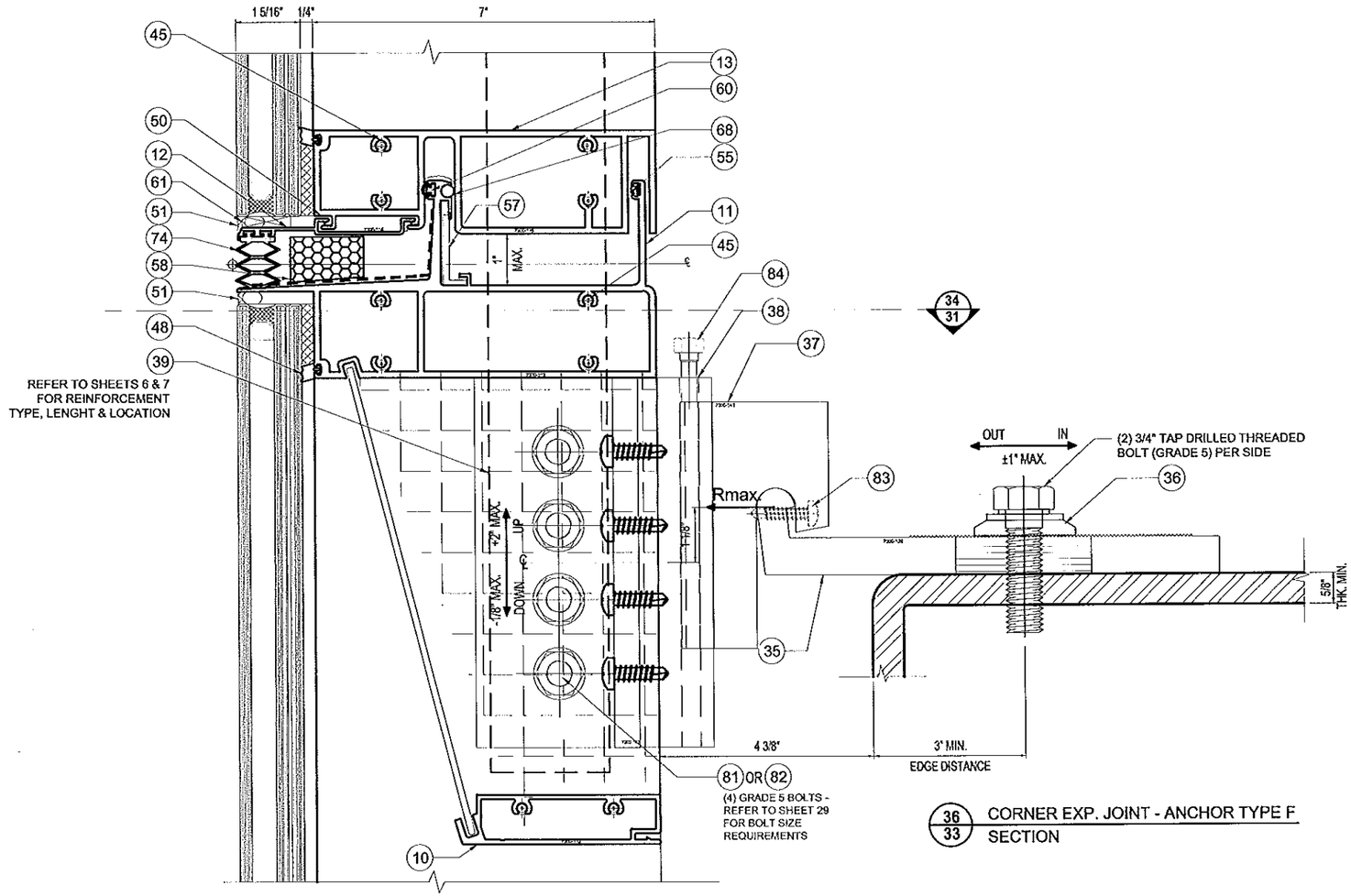

36/33 CORNER EXP. JOINT - ANCHOR TYPE F
SECTION

MAY 09 2013

Approved as complying with the
Florida Building Code
Date June 6 2013
NOA# 12-1126.05
Miami Dade Product Control
By. Manuel Cruz

MIAMI DADE COUNTY

YIPING WANG
LICENSE
YIPING WANG, P.E.
FLORIDA REGISTRATION
PE #55983
C.A.N. 28677
STATE OF FLORIDA
PROFESSIONAL ENGINEER

REVISIONS		
NO.	DATE	DESCRIPTION

MCY ENGINEERING, INC.
GLAZING CONSULTANTS
8501 SW 124 AVE. SUITE 205A P: 305.271.0117
MIAMI, FL. 33183 F: 305.921.4786
www.MCYEngineering.com MCY.Engineering@Att.net

SERIES 7000 ALUMINUM CURTAIN WALL - SMI

GLASSWALL, LLC.

3550 N.W. 49 STREET. MIAMI, FLORIDA 33142
Phone (305) 638 5151 Fax (305) 638 5158

DATE	05/09/2013
SCALE	AS NOTED
DRAWN	A.R.
PROJECT	MCY12-143

DRAWING NO.
AD12-65

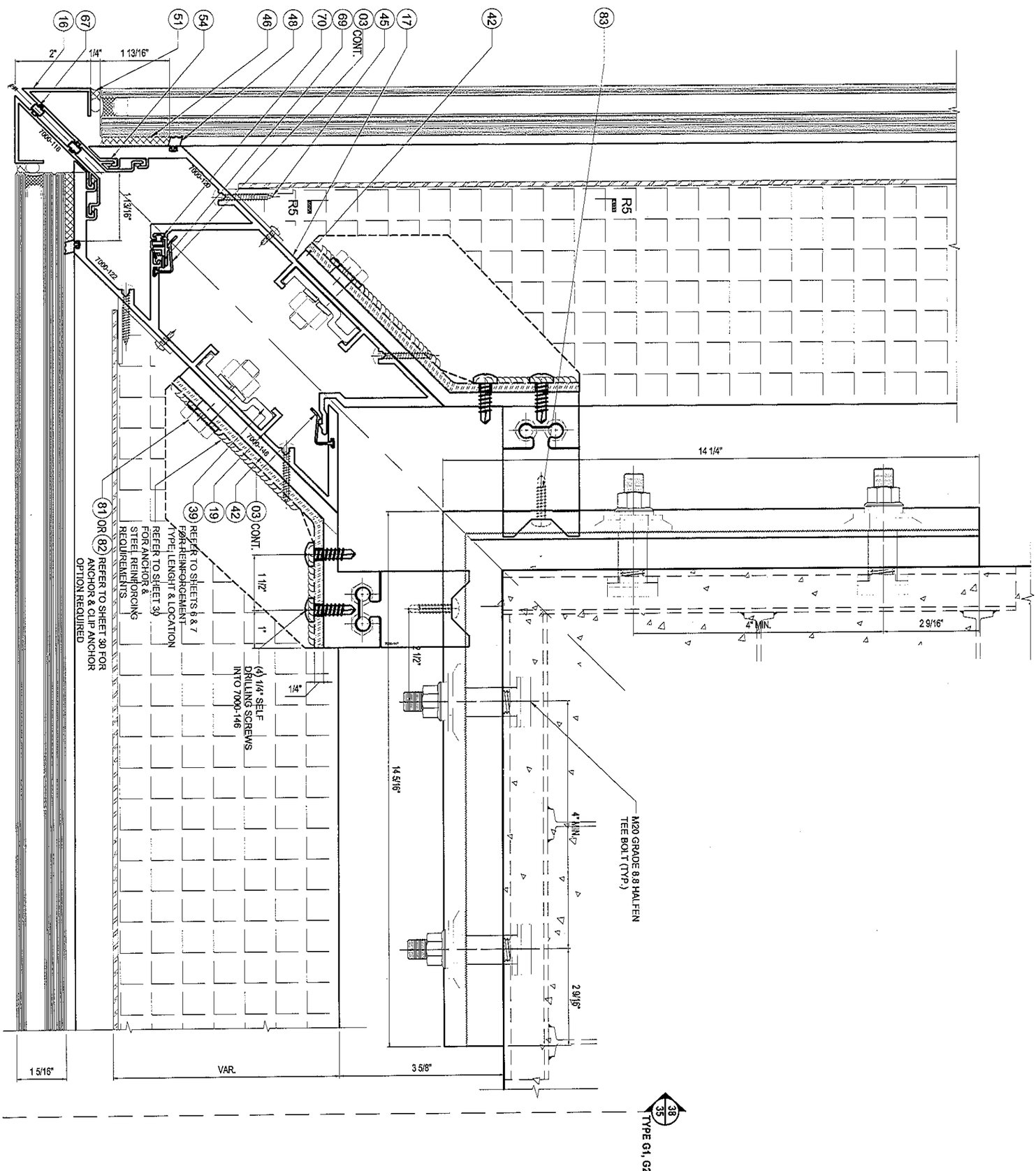

37
34
OUTSIDE CORNER MULL.
ANCHOR TYPE G1, G2

MAY 09 2013

Approved as complying with the Florida Building Code
Date 05/09/2013
NOA# 12-1128.02
Miami Dade Product Control
By:
MIAMI DADE COUNTY

STATE OF FLORIDA
PROFESSIONAL ENGINEER
YIPING WANG
LICENSE
YIPING WANG, P.E.
FLORIDA REGISTRATION
PE: 75598
CAN: 28677

SERIES 7000 ALUMINUM CURTAIN WALL - SMI

GLASSWALL, LLC.

3550 N.W. 49 STREET. MIAMI, FLORIDA 33142
Phone (305) 638 5151 Fax (305) 638 5158

MCY ENGINEERING, INC.
GLAZING CONSULTANTS

8501 SW 124 AVE. SUITE 205A
MIAMI, FL. 33183

P: 305.271.0117
F: 305.921.4786

www.MCYEngineering.com
MCY.Engineering@Att.net

REVISIONS		
NO.	DATE	DESCRIPTION

PROJECT	MCY12-143
DRAWN	A.R.
SCALE	AS NOTED
DATE	05/09/2013
DRAWING NO.	AD12-65
SHEET	34 OF 38

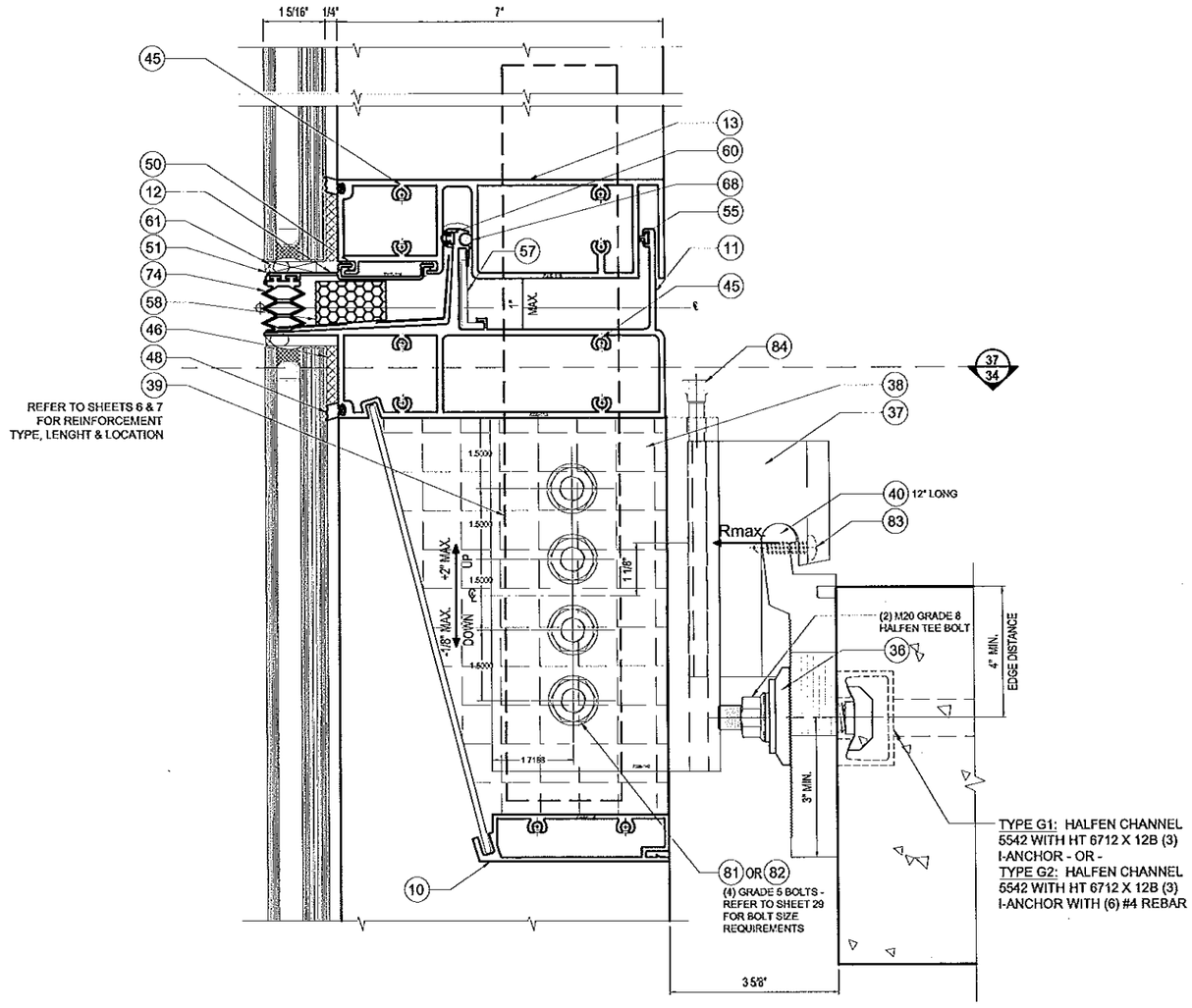

38/35 CORNER EXP. JOINT - ANCHOR TYPE G1, G2
SECTION

	SPAN	MAX. DESIGN LOAD (PSF) MULLION SPACING (M.S.)				
		36	42	48	54	60
	(in)	(in)	(in)	(in)	(in)	(in)
TYPE G1	120	140	129	113	100	90
	126	140	123	108	96	86
	132	137	117	103	91	82
	138	131	112	98	87	79
	144	126	108	94	84	75
TYPE G2	120	140	140	140	140	140
	126	140	140	140	140	140
	132	140	140	140	140	140
	138	140	140	140	140	140
	144	140	140	140	140	140

MAY 09 2013

Approved as complying with the Florida Building Code
Date June 6, 2013
NOA# 12-1126.05
Miami Dade Product Control
By
MIAMI DADE COUNTY

YIPING WANG P.E.
FLORIDA REGISTRATION
NO. 55933
C.A.N. 28677
STATE OF FLORIDA
PROFESSIONAL ENGINEER

REVISIONS

NO.	DATE	DESCRIPTION

MCY ENGINEERING, INC.
GLAZING CONSULTANTS
8501 SW 124 AVE. SUITE 205A P: 305.271.0117
MIAMI, FL. 33183 F: 305.921.4786
www.MCYEngineering.com MCY.Engineering@Att.net

SERIES 7000 ALUMINUM CURTAIN WALL - SMI

GLASSWALL, LLC.

3550 N.W. 49 STREET. MIAMI, FLORIDA 33142
Phone (305) 638 5151 Fax (305) 638 5158

DATE	05/09/2013
SCALE	AS NOTED
DRAWN	A.R.
PROJECT	MCY12-143

DRAWING NO.
AD12-65

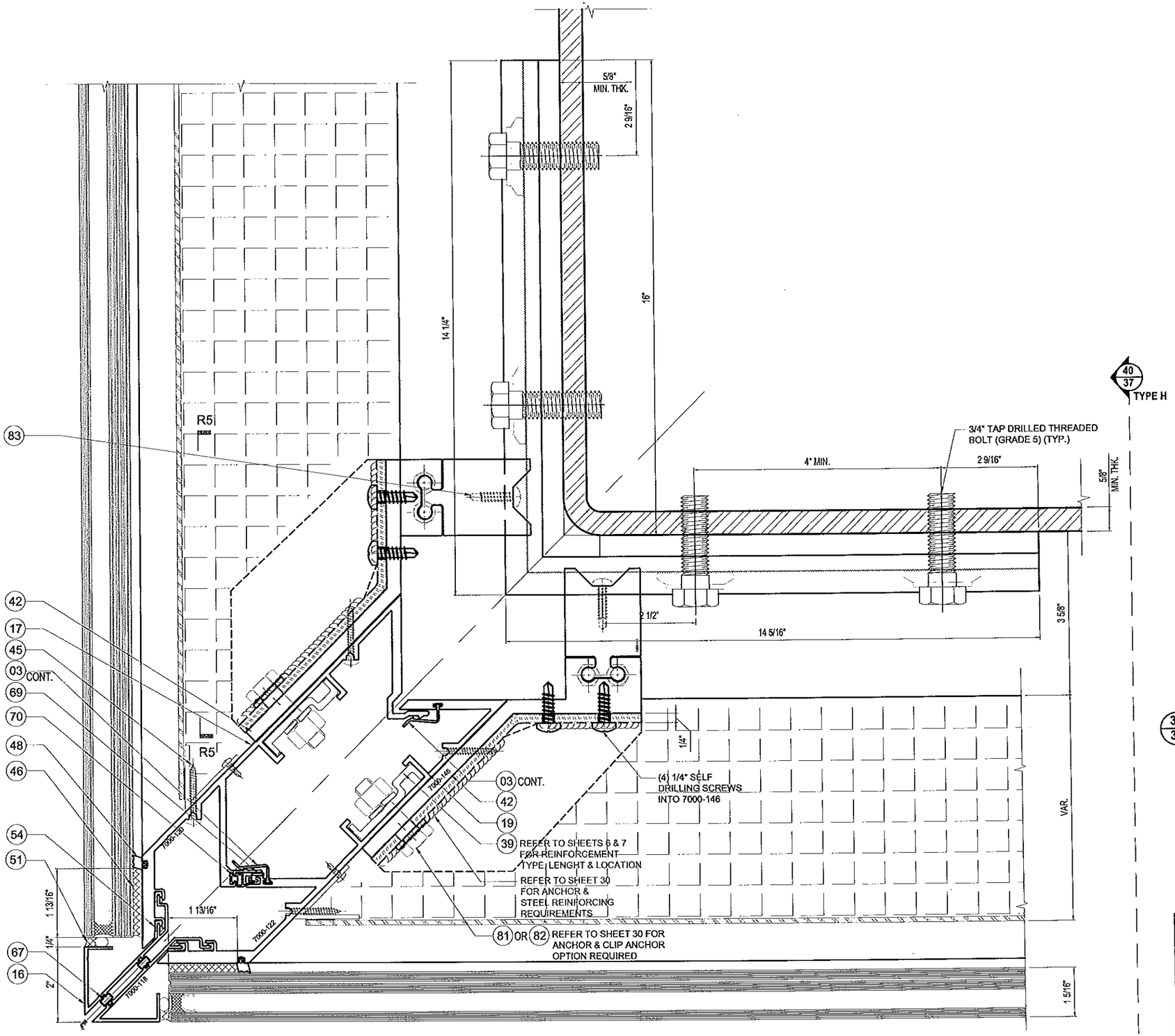

REVISIONS		
NO.	DATE	DESCRIPTION

MCY ENGINEERING, INC.
GLAZING CONSULTANTS
8501 SW 124 AVE. SUITE 205A
MIAMI, FL. 33183
P: 305.271.0117
F: 305.921.4786
www.MCYEngineering.com
MCY.Engineering@Att.net

SERIES 7000 ALUMINUM CURTAIN WALL - SMI

GLASSWALL, LLC.

3550 N.W. 49 STREET. MIAMI, FLORIDA 33142
Phone (305) 638 5151 Fax (305) 638 5158

MAY 09 2013

Approved as complying with the Florida Building Code
Date June 6, 2013
NOA# 12-1126.08
Miami Dade Product Control
By Manuel Perez
MIAMI DADE COUNTY

YIPING WANG LICENSE STATE OF FLORIDA PROFESSIONAL ENGINEER
YIPING WANG, P.E.
FLORIDA REGISTRATION
PE #55983
C.A.N. 28677
STATE OF FLORIDA

DATE	05/09/2013
SCALE	AS NOTED
DRAWN	A.R.
PROJECT	MCY12-143

DRAWING NO.
AD12-65

SHEET 36 OF 38

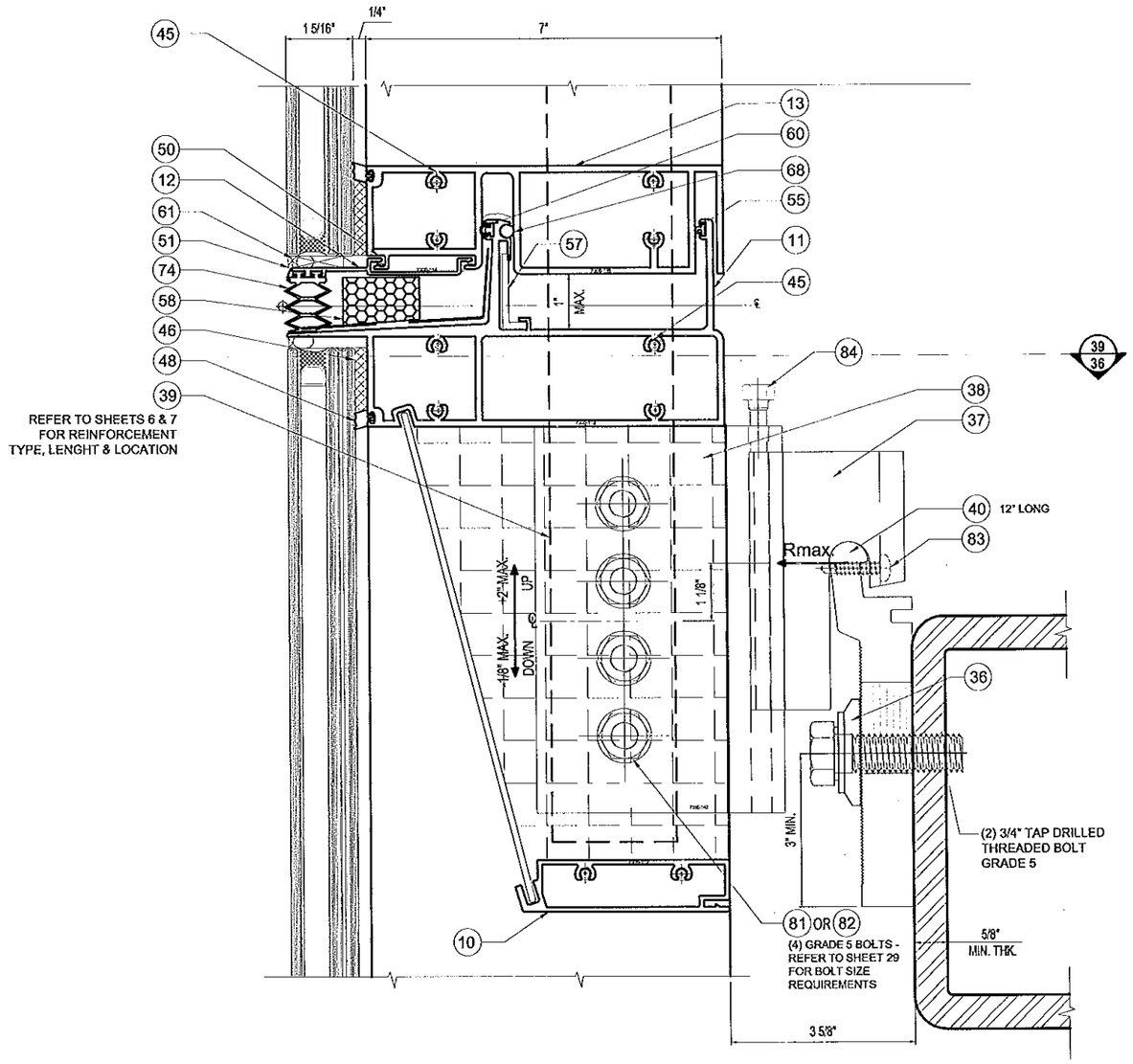

40/37 CORNER EXP. JOINT - ANCHOR TYPE H
SECTION

REVISIONS		
NO.	DATE	DESCRIPTION

MCY ENGINEERING, INC.
GLAZING CONSULTANTS
8501 SW 124 AVE. SUITE 205A
MIAMI, FL. 33183
P: 305.271.0117
F: 305.921.4786
www.MCYEngineering.com
MCY.Engineering@Att.net

SERIES 7000 ALUMINUM CURTAIN WALL - SMI

GLASSWALL, LLC.
3550 N.W. 49 STREET. MIAMI, FLORIDA 33142
Phone (305) 638 5151 Fax (305) 638 5158

MAY 09 2013

Approved as complying with the Florida Building Code
Date June 6, 2013
NOA# 12-1126.05
Miami Dade Product Control
By Manuel Perez
MIAMI DADE COUNTY

YIPING WANG LICENSE
YIPING WANG, P.E.
FLORIDA REGISTRATION
NO. #55983
C.A.N. 28677
STATE OF FLORIDA PROFESSIONAL ENGINEER

DATE	05/09/2013
SCALE	AS NOTED
DRAWN	A.R.
PROJECT	MCY12-143

DRAWING NO.
AD12-65

SHEET 37 OF 38

ITEM #	DESCRIPTION	MATERIAL	GLASSWALL PARTS #	MANUF. / REMARKS
01	FEMALE MULLION EXTENDED LEG	6063-T6	7000-101	
02	MALE MULLION	6063-T6	7000-102	
03	ANTI-BUCKLING CLIP	6063-T6	7000-103	4" LG. @ 12" O.C. MAX. TYP. CONT. AT CORNER MULLION
04	EXTENDED BEAUTY CAP	6063-T6	7000-104	
05	MALE MULLION EXTENDED LEG	6063-T6	7000-105	
06	BEAUTY CAP	6063-T6	7000-107	
07	FEMALE MULLION BUTT GLAZED	6063-T6	7000-108	
08	MALE MULLION BUTT GLAZED	6063-T6	7000-109	
09	PRESSURE PLATE	6063-T6	7000-110	
10	HORIZONTAL AT STACK JOINT	6063-T6	7000-112	
11	CHICKEN HEAD	6063-T6	7000-113	
12	STACK JOINT FIN	6063-T6	7000-114	CONT.
13	EXPANSION SILL	6063-T6	7000-115	
14	HEAD SILL COVER	6063-T6	7000-116	
15	HEAD/SILL	6063-T6	7000-117	
16	EXTERIOR CORNER COVER	6063-T6	7000-118	
17	EXTERIOR CORNER MALE MULLION	6063-T6	7000-120	
18	INTERIOR CORNER FIN	6063-T6	7000-121	
19	EXTERIOR CORNER FEMALE MULLION	6063-T6	7000-122	
20	INTERIOR CORNER FIN	6063-T6	7000-123	
21	INTERIOR CORNER FEMALE MULLION	6063-T6	7000-124	
22	INTERIOR CORNER MALE MULLION	6063-T6	7000-125	
23	CHICKEN HEAD SUB-SILL	6063-T6	7000-126	
24	SILL	6063-T6	7000-127	
25	HORIZONTAL MULLION	6063-T6	7000-128	
26	HORIZONTAL BUTT GLAZED	6063-T6	7000-129	
27	HORIZONTAL BUTT GLAZED FIN	6063-T6	7000-130	6" LG. (2) AT EA. PANEL AT 1/4 POINT
28	CRESCENT FEMALE MULLION	6063-T6	7000-131	
29	CRESCENT MALE MULLION	6063-T6	7000-132	
30	HEAD BUTT GLAZED	6063-T6	7000-133	
31	STACK JOINT COVER	6063-T6	7000-134	
32	CHICKEN HEAD WITHOUT COVER	6063-T6	7000-135	
33	SILL COVER	6063-T6	7000-136	
34	SILL COVER BUNGALOW	6063-T6	7000-137	
35	SLAB ANCHOR	6061-T6	7000-139	
35A	CORNER SLAB ANCHOR	6061-T6	7000-139A	
36	SERRATE WASHER	6061-T6	7000-140	
37	MULLION ANCHOR HOOK	6061-T6	7000-141	
38	MULLION ANCHOR FIST	6061-T6	7000-142	
39	ALUMINUM SPLI CE - AS-1	6061-T6	7000-143	
40	SHEAR ANCHOR PLATE	6061-T6	7000-144	
41	INSIDE CORNER ANCHOR FIST	6061-T6	7000-145	
42	OUTSIDE CORNER ANCHOR FIST	6061-T6	7000-146	
43	RAILING COVER	6063-T6	7000-149	
44	HORIZONTAL RAILING	6063-T6	7000-150	
45	# 14 X 11/2" LG. PH. SMS. 18-8 CW SERIES ASSY. SCREW	STAINLESS STEEL	-	
46	STRUCTURAL SILICONE	SILICONE	GE SSG 4600	SEE CHART SHEET 07
47	TWO PART STRUCTURAL SILICONE	SILICONE	-	
48	EXTERIOR PRESSURE GASKET	EPDM	W5250-NS02	DUROMETER 70 ± 5 SHORE A
49	1 5/16" INSULATED LAMINATED GLASS	GLASS	-	
50	EXP. JT. GLASS SHELF ISOLATOR	RIGID VINYL	065-012	
51	CONT. SILICONE SEALANT AND BACKER-ROD	SILICONE	-	
54	THERMAL ISOLATOR	RIGID VINYL	065-018	
55	MULLION SEAL GASKET	EPDM	W5250-NE01	

ITEM #	DESCRIPTION	MATERIAL	GLASSWALL PARTS #	MANUF. / REMARKS
56	5/8" +/- 1/8" SHIM	-	-	
57	1 7/16" X 1/2" X 1/8" THK. ANGLE	ALUM.	-	
58	SPONGE BUFFER	-	-	
59	9/16" CW SPACER	-	W5250-301	
60	STACK JOINT FRONT GASKET	-	065-011	
61	1" x 1/4" SETTING BLOCK	-	-	
62	8" X 12" X 1/2" THK. TUBE	A36 STEEL	-	
63	1" X 1" X 1/16" THK. ANGLE	ALUM.	-	
64	GASKET .25" PUSH IN	SILICONE	WW7000-NE003	
65	1 5/8" X 3 1/4" X 1/8" THK. TUBE	ALUMINUM	-	
66	TUBE	ALUMINUM	-	
67	MULL EXTERIOR VERT JOINT FILLER	-	065-015	
68	CHICKEN HEAD SPACER	-	065-008	4" LG. @ 12" O.C. MAX. TYP. AT EACH FRAME SILL ADAPTOR
69	MULLION AIR BARRIER	EPDM	065-009	
70	MULLION INTERIOR VERTICAL AIR SEAL	EPDM	065-019	
71	PVC PART SOLID	PVC	WW7000-NE006	DUROMETER 60/70 ± 5 SHORE A
72	PVC PART	PVC	WW7000-NE005	DUROMETER 60/70 ± 5 SHORE A
73	BULB GASKET 3/8" SLIDE		WW7000-NE007	DUROMETER 60/70 ± 5 SHORE A
74	EXPANSION JOINT GASKET		WW7000-NE001	DUROMETER 60/70 ± 5 SHORE A
75	1 7/8" x 1/4" SETTING BLOCK	EPDM		
76	5/16-12 SELF TAPPING SCREW SAE GRADE 5			SCREWS SPACED 3 .75" O.C.
77	ST-1: 3/4" THK. REINFORCEMENT	A50 STEEL		Fy = 50 ksi
78	ST-2: 1/4" THK. REINFORCEMENT	A36 STEEL		Fy = 36 ksi
79	ST-4: 1/2" THK. REINFORCEMENT	A50 STEEL		Fy = 50 ksi
80	#12 X 1" PHILLIPS PAN HEAD SMS	STAINLESS STEEL		
81	1/2 - 13 SAE GRADE 5 (F.H. OR HEXAGONAL)	STEEL		Fy = 92 ksi Fu = 120 ksi
82	5/8 - 11 SAE GRADE 5 (F.H. OR HEXAGONAL)	STEEL		Fy = 92 ksi Fu = 120 ksi
83	1/4" X 3/4" LG. SMS	STAINLESS STEEL		Fy = 65 ksi Fu = 100 ksi
84	7/16 - 14 X 1" LG. SAE GRADE 5	STEEL		Fy = 92 ksi Fu = 120 ksi

MAY 09 2013

Approved as complying with the Florida Building Code
Date June 6, 2013
NOA# 12-1126.05
Miami Dade Product Control
By: Manuel Perez
MIAMI DADE COUNTY

YIPING WANG LICENSE — YIPING WANG, P.E. FLORIDA REGISTRATION No. 55983 C.A.N. 28677 — STATE OF FLORIDA PROFESSIONAL ENGINEER

REVISIONS

NO.	DATE	DESCRIPTION

MCY ENGINEERING, INC.
GLAZING CONSULTANTS
8501 SW 124 AVE. SUITE 205A MIAMI, FL 33183
P: 305.271.0117
F: 305.921.4786
www.MCYEngineering.com MCY.Engineering@Att.net

SERIES 7000 ALUMINUM CURTAIN WALL - SMI

GLASSWALL, LLC.

3550 N.W. 49 STREET. MIAMI, FLORIDA 33142
Phone (305) 638 5151 Fax (305) 638 5158

DATE	05/09/2013
SCALE	AS NOTED
DRAWN	A.R.
PROJECT	MCY12-143

DRAWING NO.
AD12-65

SHEET 38 OF 38