MIAMI-DADE COUNTY
DEPARTMENT OF REGULATORY AND ECONOMIC RESOURCES (RER)
BOARD AND CODE ADMINISTRATION DIVISION

MIAMI-DADE COUNTY
PRODUCT CONTROL SECTION
11805 SW 26 Street, Room 208
Miami, Florida 33175-2474
T (786) 315-2590 F (786) 315-2599
www.miamidade.gov/economy

NOTICE OF ACCEPTANCE (NOA)

Whirlwind Building Systems
8234 Hansen Road
Houston, TX 77075

SCOPE:
This NOA is being issued under the applicable rules and regulations governing the use of construction materials. The documentation submitted has been reviewed and accepted by Miami-Dade County RER- Product Control Section to be used in Miami Dade County and other areas where allowed by the Authority Having Jurisdiction (AHJ).

This NOA shall not be valid after the expiration date stated below. The Miami-Dade County Product Control Section (In Miami Dade County) and/or the AHJ (in areas other than Miami Dade County) reserve the right to have this product or material tested for quality assurance purposes. If this product or material fails to perform in the accepted manner, the manufacturer will incur the expense of such testing and the AHJ may immediately revoke, modify, or suspend the use of such product or material within their jurisdiction. RER reserves the right to revoke this acceptance, if it is determined by Miami-Dade County Product Control Section that this product or material fails to meet the requirements of the applicable building code.

This product is approved as described herein, and has been designed to comply with the High Velocity Hurricane Zone of the Florida Building Code.

DESCRIPTION: Weather Lok-16, 24 ga. (0.024" min.) Steel Roof Panel

APPROVAL DOCUMENT: Drawing No. **14003502**, titled "Weather Lok 16-24 Details", sheets 1 through 8 of 8, prepared by Whirlwind Building Systems, dated March 27, 2002, signed and sealed by Dennis L. Johnson, P.E., on June 30, 2013, bearing the Miami-Dade County Product Control Revision stamp with the Notice of Acceptance number and the expiration date by the Miami-Dade County Product Control Section.

MISSILE IMPACT RATING: Large and Small Missile Impact Resistant

LABELING: Each panel shall bear a permanent label with the manufacturer's name or logo, city, state and the following statement: "Miami-Dade County Product Control Approved", unless otherwise noted herein.

RENEWAL of this NOA shall be considered after a renewal application has been filed and there has been no change in the applicable building code negatively affecting the performance of this product.

TERMINATION of this NOA will occur after the expiration date or if there has been a revision or change in the materials, use, and/or manufacture of the product or process. Misuse of this NOA as an endorsement of any product, for sales, advertising or any other purposes shall automatically terminate this NOA. Failure to comply with any section of this NOA shall be cause for termination and removal of NOA.

ADVERTISEMENT: The NOA number preceded by the words Miami-Dade County, Florida, and followed by the expiration date may be displayed in advertising literature. If any portion of the NOA is displayed, then it shall be done in its entirety.

INSPECTION: A copy of this entire NOA shall be provided to the user by the manufacturer or its distributors and shall be available for inspection at the job site at the request of the Building Official.

This NOA **revises & renews NOA #07-0813.04** and consists of this page 1, evidence submitted pages E-1, E-2, and E-3 as well as approval document mentioned above.
The submitted documentation was reviewed by **Helmy A. Makar, P.E., M.S.**

MIAMI-DADE COUNTY APPROVED

08/15/2013

NOA No. 12-1204.08
Expiration Date: 08/15/2018
Approval Date: 08/15/2013

Wirlwind Building Systems

NOTICE OF ACCEPTANCE: EVIDENCE SUBMITTED

1. EVIDENCE SUBMITTED UNDER PREVIOUS APPROVAL # 03-0708.01

A. DRAWINGS

1. *Manufacturer's die drawings and sections.*
2. *Drawing No.* ***14003502****, titled "Weather Lok 16-24 Details", sheets 1 through 8, prepared by manufacturer, dated 3/27/02, signed & sealed by Terrence E. Wolfe, P.E.*

B. TESTS

1. *Test reports on 1) Uniform Static Air Pressure Test, Loading per PA-125-95 per ASTM 1592-98 along with marked-up drawings and installation diagram 24 GA 16" steel roof panel, prepared by Farabaugh Engineering & Testing, Inc., Test Report No. T191-01, dated 11/17/01, signed and sealed by Daniel Farabaugh, P.E.*
2. *Test reports on 1) Uniform Static Air Pressure Test, Loading per PA-125-95 per ASTM 1592-98 along with marked-up drawings and installation diagram 24 GA 16" steel roof panel, prepared by Farabaugh Engineering & Testing, Inc., Test Report No. T190-01, dated 11/17/01, signed and sealed by Daniel Farabaugh, P.E.*
3. *Test reports on 1) Large Missile Impact Test per SFBC, PA 201-94 along with marked-up drawings and installation diagram 24 GA 16" steel roof panel, prepared by Farabaugh Engineering & Testing, Inc., Test Report No. T209-01, dated 11/17/01, signed and sealed by Daniel Farabaugh, P.E.*
4. *Test reports on 1) Wind and Wind Driven Rain Resistance of Discontinuous Roof Systems, P 100-95 along with marked-up drawings and installation diagram 24 GA 16" steel roof panel, prepared by Asphalt Technologies, Inc., Test Report No. DDI-001-02-01, dated 12/11/01, signed and sealed by Charles L. Thomas, P.E.*

C. CALCULATIONS

1. *Anchor Calculations and structural analysis, prepared by Terrence E. Wolfe, P.E., dated 4/3/02, signed and sealed by Terrence E. Wolfe, P.E.*

D. MATERIAL CERTIFICATION

1. *Mill Certificate, prepared by Metal Prep, dated 7/12/02.*
2. *Tensile Test prepared by West Penn Testing Laboratories, Inc., Project No. T191-01, dated 7/19/01, for steel samples, tested per ASTM E8-00, signed by Todd Ault.*
3. *Tensile Test prepared by West Penn Testing Laboratories, Inc., Project No. T190-01, dated 7/19/01, for steel samples, tested per ASTM E8-00, signed by Todd Ault.*
4. *Tensile Test prepared by West Penn Testing Laboratories, Inc., Project No. T209-01, dated 7/19/01, for steel samples, tested per ASTM E8-00, signed by Todd Ault.*

Helmy A. Makar, P.E., M.S.
Product Control Unit Supervisor
NOA No. 12-1204.08
Expiration Date: 08/15/2018
Approval Date: 08/15/2013

NOTICE OF ACCEPTANCE: EVIDENCE SUBMITTED

E. STATEMENTS

1. *Statement letter of conformance, dated 2/5/02, signed and sealed by Terrence E. Wolfe, P.E.*
2. *Statement letter of no financial interest, dated 2/5/02, signed by Terrence E. Wolfe, P.E., and signed and sealed by Debra Parten.*

E. OTHER

1. *Letter from Maurice Gray Associates, Inc.*

2. EVIDENCE SUBMITTED UNDER PREVIOUS APPROVAL # 05-1102.02

A. DRAWINGS

1. *Drawing No. **14003502**, titled "Weather Lok 16-24 Details", sheets 1 through 8 of 8, prepared by Whirlwind Building Systems, dated March 27, 2002, last revision #1 dated June 17, 2005, signed and sealed by Terrence E. Wolfe, P.E.*

B. TESTS

1. *Test reports on Susceptibility to Leakage test for Roof System Assemblies, TAS 114 Appendix G along with drawings and installation diagram of 24 GA 16" steel roof panel, prepared by Farabaugh Engineering & Testing, Inc., Test Report No. T178-04, dated 05/03/05, signed and sealed by Daniel Farabaugh, P.E.*

C. CALCULATIONS

1. *Fastener Calculations, prepared by Terrence E. Wolfe, P.E., dated 06/21/05, signed and sealed by Terrence E. Wolfe, P.E.*

D. QUALITY ASSURANCE

1. *By Miami-Dade County Building Code Compliance Office.*

E. MATERIAL CERTIFICATION

1. *None.*

3. EVIDENCE SUBMITTED UNDER PREVIOUS APPROVAL # 07-0813.04

A. DRAWINGS

1. *None.*

B. TESTS

1. *None.*

Helmy A. Makar, P.E., M.S.
Product Control Unit Supervisor
NOA No. 12-1204.08
Expiration Date: 08/15/2018
Approval Date: 08/15/2013

NOTICE OF ACCEPTANCE: EVIDENCE SUBMITTED

C. CALCULATIONS
1. None.

D. QUALITY ASSURANCE
1. By Miami-Dade County Building Code Compliance Office.

E. MATERIAL CERTIFICATION
1. None.

4. NEW EVIDENCE SUBMITTED

A. DRAWINGS
*1. Drawing No. **14003502**, titled "Weather Lok 16-24 Details", sheets 1 through 8 of 8, prepared by Whirlwind Building Systems, dated March 27, 2002, signed and sealed by Dennis L. Johnson, P.E., on June 30, 2013.*

B. TESTS
1. None.

C. CALCULATIONS
1. None.

D. QUALITY ASSURANCE
1. By Miami-Dade County Department of Regulatory and Economic Resources.

E. MATERIAL CERTIFICATION
1. None.

Hemy A. Makar, P.E., M.S.
Product Control Unit Supervisor
NOA No. 12-1204.08
Expiration Date: 08/15/2018
Approval Date: 08/15/2013

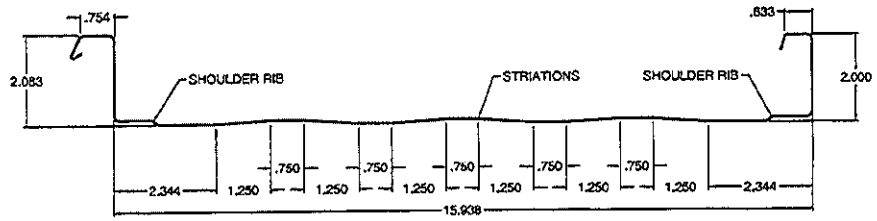

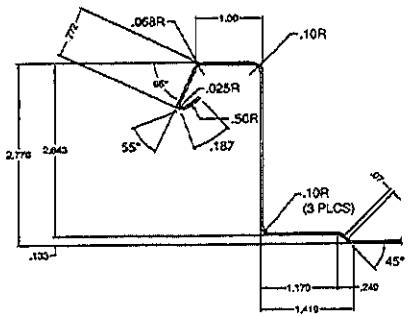

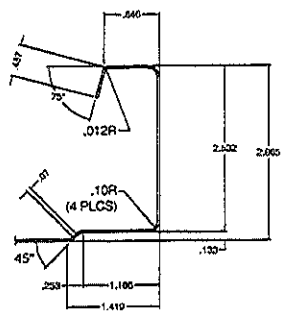

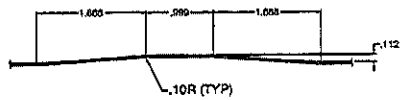

PANEL PROPERTIES						
Panel Gage	Painted Panel Thickness	Yield Strength*	Tensile Strength*	Elongation*	Steel Coating*	Paint Coatings
24	0.0240"	50 KSI	65 KSI	26.5	AZ 55	Kynar 500
		* Conform to ASTM A792 Structural Quality Grade 50				

NOTES:

1. The 24 gage Weather Lok-16 roof panels shall be used for roof construction only. The actual roof project shall be constructed using the same details shown on these drawings including:
   1.1. Details, all panel material characteristics and section with dimension and thickness.
   1.2. Erection details including all connection fasteners with size and location.
   1.3. Panel maximum span and pressure for the field, perimeters and corners based on panel allowables shown below.
2. The maximum allowable spans and uplift pressures for the Weather Lok-16 24ga are as follows:

Maximum Panel Span	Maximum Uplift Pressure (psf)
1'-0"	133.40
1'-6"	122.53
2'-0"	111.66
2'-6"	100.79
3'-0"	89.92
3'-6"	79.06
4'-0"	68.19
4'-6"	57.32
5'-0"	42.80

3. All panel submembers shall be minimum 16 gage (.056"). They are not part of this approval and they shall be reviewed structurally by the structural plans examiner of the corresponding building department for each job.

PRODUCT REVISED
as complying with the Florida
Building Code
Acceptance No 12-1204.08
Expiration Date 08/15/2018
By
Miami Dade Product Control

DENNIS L. JOHNSON
LICENSE
No 54340
STATE OF FLORIDA
PROFESSIONAL ENGINEER
06-30-13

12-14 x 1¼" Zinc Hex Head "Ultimate" #3 Pt. with Integral Washer, by Atlas Fasteners

¼-14 x ⅞" Zinc Hex Head "Ultimate" with Integral Washer, by Atlas Fasteners

¼-14 x 1¼" Tek-2 Self-Driller, by Atlas Fasteners

10-14 x 1" Zinc Hex Head Woodtite "Ultimate" with Integral Washer, by Atlas Fasteners

1" x 3/32" Butyl Tape

⅞" x 3/16" Butyl Tape

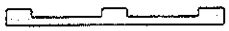
2½" x 3/16" Tri-Bead Butyl Tape

Advanced Polymer Gutter Sealant

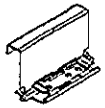
Weather Lok-16 Low Movable Clip

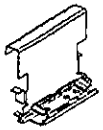
Weather Lok-16 High Movable Clip

MANUFACTURING ENGINEER: DENNIS JOHNSON, P.E.				
FLORIDA REGISTRATION NO: 54340				
WHIRLWIND STEEL BUILDINGS WEATHER LOK-16 24GA				
WHIRLWIND STEEL BUILDINGS, INC. P.O. BOX 70280 - 8234 HANSEN ROAD HOUSTON, TX 77234 - (713) 946-7140	REL	BY	DESCRIPTION	DATE
PROJECT: PRODUCT APPROVAL				
SHEET TITLE: WEATHER IOK-16 24GA DETAILS	DWN BY:		DATE: 3-26-02	
	CHKD BY:		SCALE: N.T.S.	
LOCATION: FLORIDA	PROJECT NUMBER:		DWG NO: 14003502	SHEET NO: 1 of 8

24ga Weather Lok-16 Roof panel.dwg

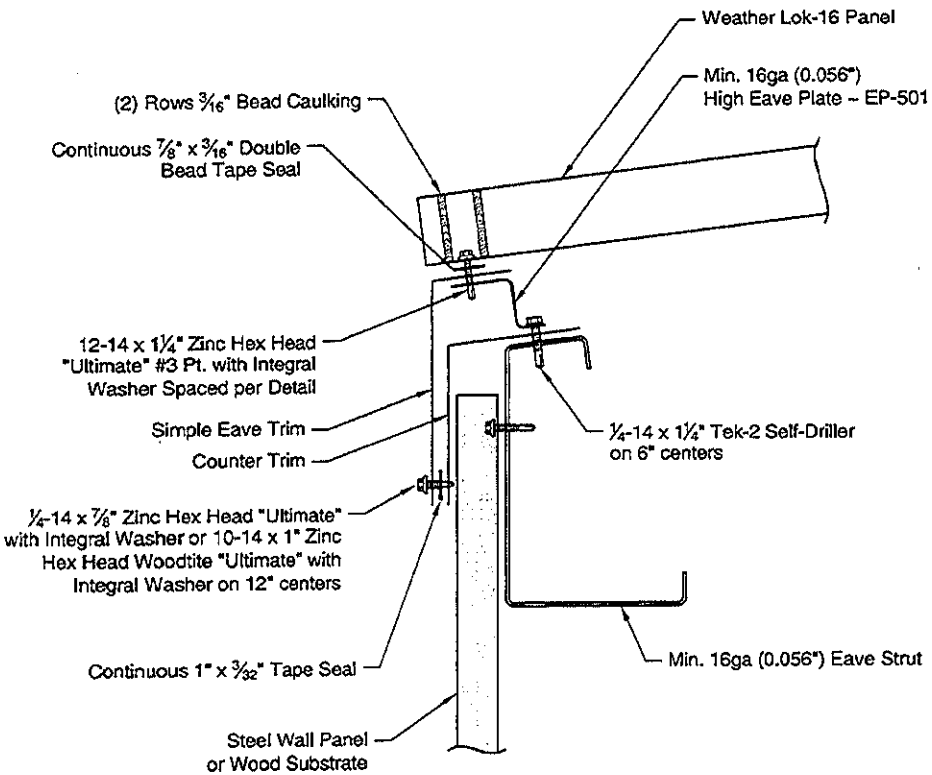

LOW EAVE

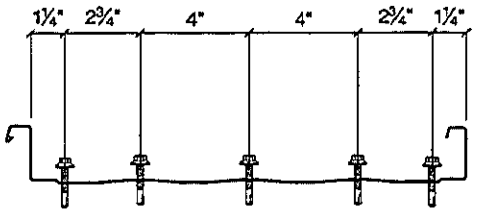

PANEL - EAVE FASTENERS

PRODUCT REVISED
as complying with the Florida
Building Code
Acceptance No 12-1204.08
Expiration Date 08/15/2018
By
Miami Dade Product Control

DENNIS L. JOHNSON
LICENSE
No 54340
STATE OF
FLORIDA
PROFESSIONAL ENGINEER

66-3013

MANUFACTURING ENGINEER: DENNIS JOHNSON, P.E.				
FLORIDA REGISTRATION NO: 54340				
WHIRLWIND STEEL BUILDINGS WEATHER LOK-16 24GA				
WHIRLWIND STEEL BUILDINGS, INC. P.O. BOX 75280 - 8234 HANSEN ROAD HOUSTON, TX 77234 - (713) 946-7140	REL	BY	DESCRIPTION	DATE
PROJECT: PRODUCT APPROVAL				
SHEET TITLE: WEATHER IOK-16 24GA DETAILS	DWN BY:		DATE: 3-27-02	
	CHKD BY:		SCALE: N.T.S.	
LOCATION: FLORIDA	PROJECT NUMBER:		DWG NO: 14003S02	SHEET NO: 2 of 8

24ga Weather Lok-16 Roof panel.dwg

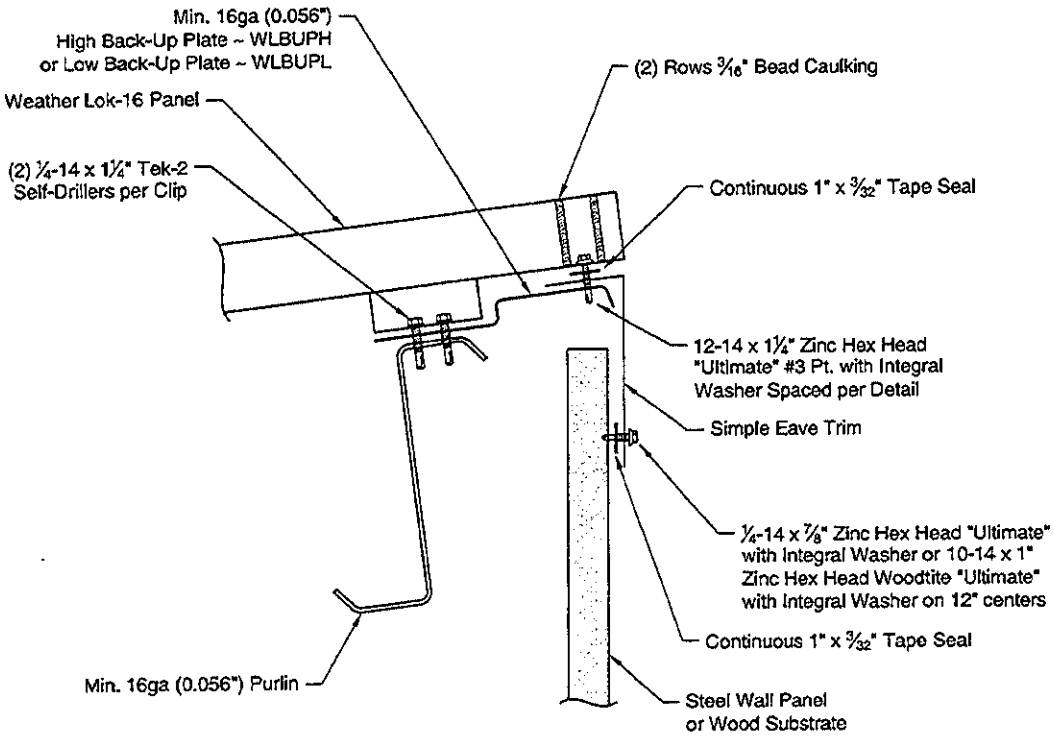

HIGH EAVE

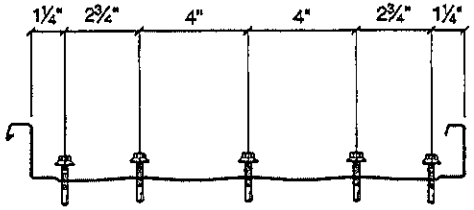

PANEL - EAVE FASTENERS

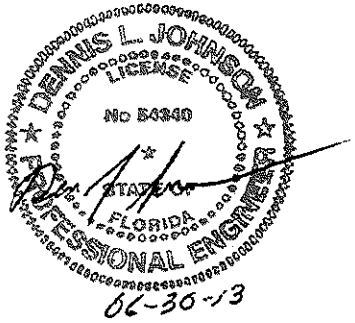

PRODUCT REVISED
as complying with the Florida
Building Code
Acceptance No 12-1204.08
Expiration Date 08/15/2018
By
Miami Dade Product Control

MANUFACTURING ENGINEER: DENNIS JOHNSON, P.E.					
FLORIDA REGISTRATION NO: 54340					
WHIRLWIND STEEL BUILDINGS WEATHER LOK-16 24GA					
WHIRLWIND STEEL BUILDINGS, INC. P.O. BOX 75280 - 6224 HANSEN ROAD HOUSTON, TX 77234 - (713) 946-7140	REL.	BY	DESCRIPTION		DATE
PROJECT: PRODUCT APPROVAL					
SHEET TITLE: WEATHER IOK-16 24GA DETAILS	DWN BY:		DATE: 3-27-02		
	CHKD BY:		SCALE: N.T.S.		
LOCATION: FLORIDA	PROJECT NUMBER:		DWG NO: 14003502	SHEET NO: 3 of 8	

24ga Weather Lok-16 Roof panel.dwg

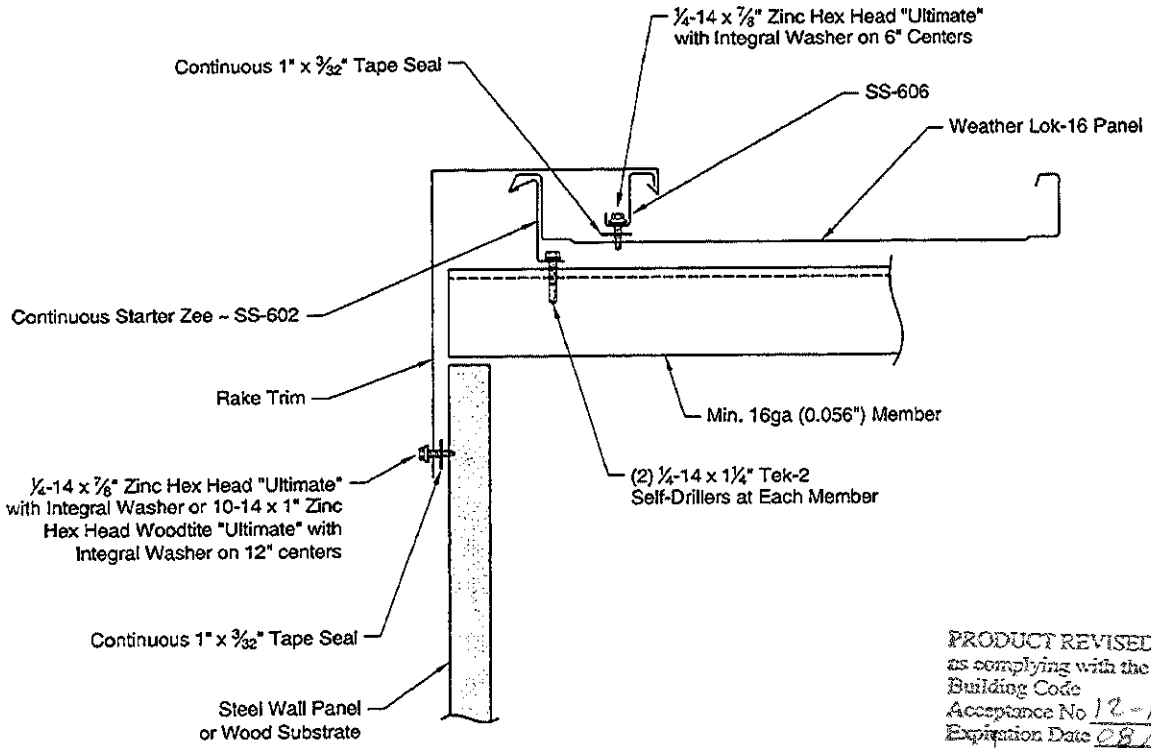

RAKE 1

PRODUCT REVISED
as complying with the Florida Building Code
Acceptance No 12-1204.08
Expiration Date 08/15/2018
By
Miami Dade Product Control

DENNIS L. JOHNSON
LICENSE
No 54340
STATE OF FLORIDA
PROFESSIONAL ENGINEER
06-30-13

MANUFACTURING ENGINEER: DENNIS JOHNSON, P.E.				
FLORIDA REGISTRATION NO: 54340				
WHIRLWIND STEEL BUILDINGS WEATHER LOK-16 24GA				
WHIRLWIND STEEL BUILDINGS, INC. P.O. BOX 78260 - 8234 HANSEN ROAD HOUSTON, TX 77234 - (713) 945-7140	REV.	BY	DESCRIPTION	DATE
PROJECT: PRODUCT APPROVAL				
SHEET TITLE: WEATHER IOK-16 24GA DETAILS	DWN BY:		DATE: 3-27-02	
	CHKD BY:		SCALE: N.T.S.	
LOCATION: FLORIDA	PROJECT NUMBER:		DWG NO: 14003502	SHEET NO: 4 of 8

24ga Weather Lok-16 Roof panel.dwg

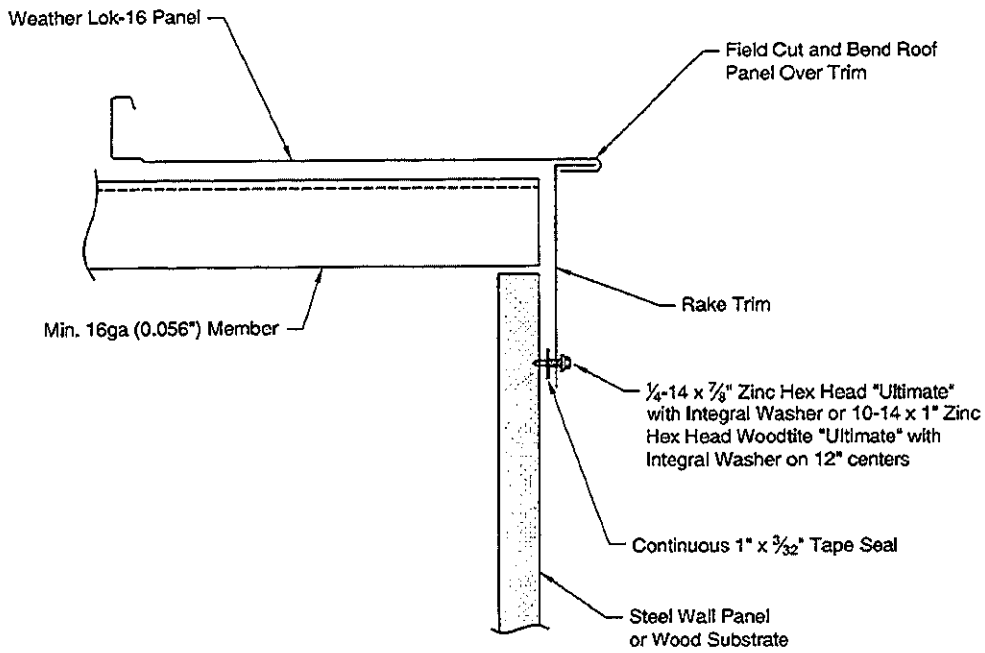

RAKE 2

DENNIS L. JOHNSON
LICENSE
No 54340
STATE OF FLORIDA
PROFESSIONAL ENGINEER
06-30-13

PRODUCT REVISED
as complying with the Florida Building Code
Acceptance No 12-1204.08
Expiration Date 08/15/2018
By
Miami Dade Product Control

MANUFACTURING ENGINEER:	DENNIS JOHNSON, P.E.
FLORIDA REGISTRATION NO:	54340
	WHIRLWIND STEEL BUILDINGS WEATHER LOK-16 24GA
WHIRLWIND STEEL BUILDINGS, INC. P.O. BOX 75280 - 8234 HANSEN ROAD HOUSTON, TX 77234 - (713) 940-7140	REV / BY / DESCRIPTION / DATE
PROJECT: PRODUCT APPROVAL	
SHEET TITLE: WEATHER 10K-16 24GA DETAILS	DWN BY: / DATE: 3-27-02 / CHKD BY: / SCALE: N.T.S.
LOCATION: FLORIDA	PROJECT NUMBER: / DWG NO: 14003502 / SHEET NO: 5 of 8

24ga Weather Lok-16 Roof panel.dwg

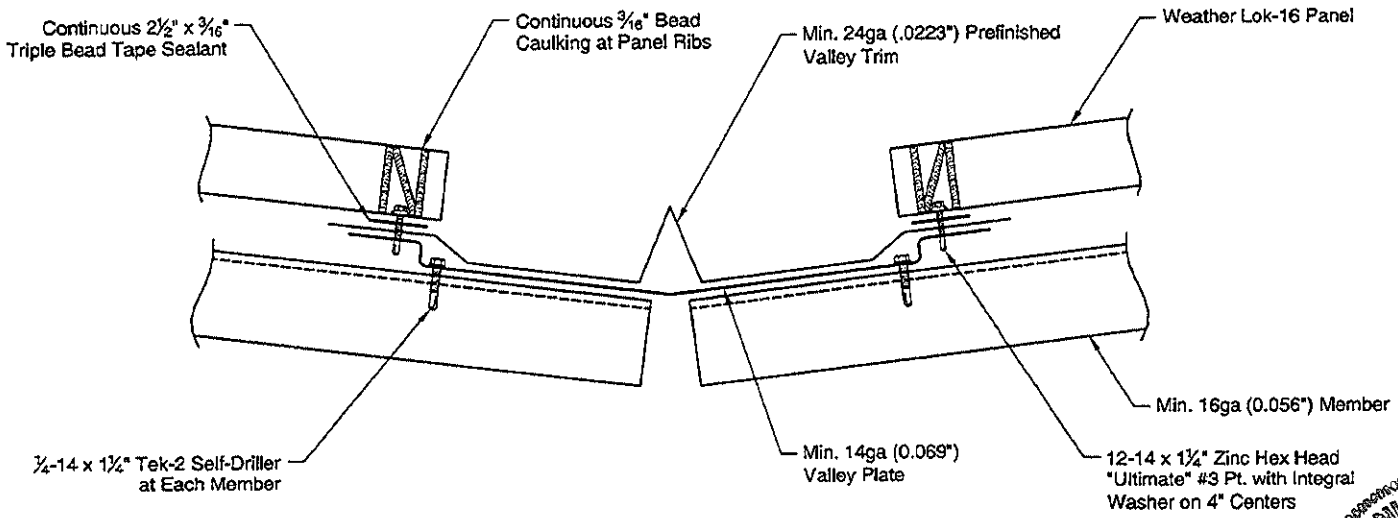

VALLEY

DENNIS L. JOHNSON
LICENSE
No 54340
STATE OF
FLORIDA
PROFESSIONAL ENGINEER

06-30-13

PRODUCT REVISED
as complying with the Florida
Building Code
Acceptance No 12-1204.08
Expiration Date 08/15/2018
By
Miami Dade Product Control

MANUFACTURING ENGINEER:	DENNIS JOHNSON, P.E.
FLORIDA REGISTRATION NO:	54340
	WHIRLWIND STEEL BUILDINGS WEATHER LOK-16 24GA

WHIRLWIND STEEL BUILDINGS, INC.
P.O. BOX 75280 - 6234 HANSEN ROAD
HOUSTON, TX 77234 - (713) 946-7140

REL	BY	DESCRIPTION	DATE

PROJECT: PRODUCT APPROVAL			
SHEET TITLE: WEATHER IOK-16 24GA DETAILS	DWN BY:	DATE: 3-27-02	
	CHKD BY:	SCALE: N.T.S.	
LOCATION: FLORIDA	PROJECT NUMBER:	DWG NO: 14003502	SHEET NO: 6 of 8

24ga Weather Lok-16 Roof panel.dwg

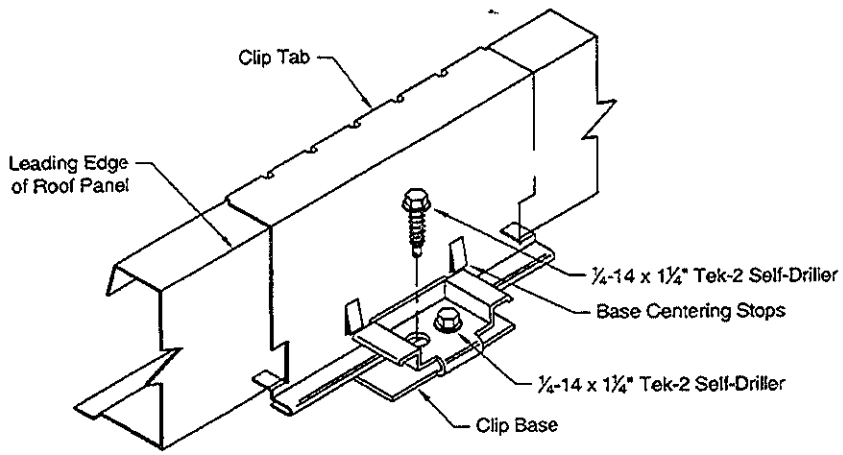

⅜" Stand-Off Clip
WL-16 Low Clip
(MC 120310)

NOTES:

1. There are two types of clips that can be furnished with this roof system, the ⅜" stand-off and the 1-3/8" stand-off. Both of these are floating clips.
2. Thermal spacers are required with the 1⅜" stand-off clip.
3. Apply a 4½" strip of ⅜" x 3/32" tape sealant to the underside of the clip before installation per Detail "A".
4. Install panel clips along the male edge of the panel at each purlin location.
5. Attach clip to purlin with (2) ¼-14 x 1¼" Tek-2 self-drilling screws per clip.

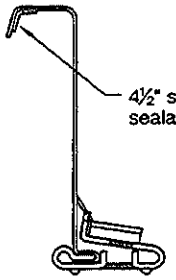

Detail "A"

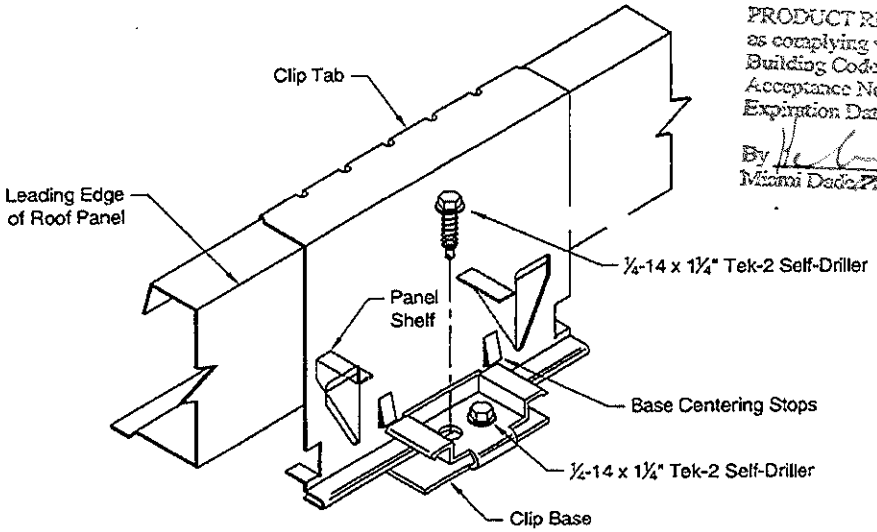

1⅜" Stand-Off Clip
WL-16 High Clip
(MC 121310)

PRODUCT REVISED
as complying with the Florida
Building Code
Acceptance No 12-1204.08
Expiration Date 08/15/2018
By
Miami Dade Product Control

DENNIS L. JOHNSON
LICENSE
No 54340
STATE OF
FLORIDA
PROFESSIONAL ENGINEER
06-30-13

MANUFACTURING ENGINEER: DENNIS JOHNSON, P.E.				
FLORIDA REGISTRATION NO: 54340				
WHIRLWIND STEEL BUILDINGS WEATHER LOK-16 24GA				
WHIRLWIND STEEL BUILDINGS, INC. P.O. BOX 75280 - 8234 HANSEN ROAD HOUSTON, TX 77234 - (713) 946-7140	REL	BY	DESCRIPTION	DATE
PROJECT: PRODUCT APPROVAL				
SHEET TITLE: WEATHER LOK-16 24GA DETAILS	DWN BY:		DATE: 3-27-02	
	CHKD BY:		SCALE: N.T.S.	
LOCATION: FLORIDA	PROJECT NUMBER:		DWG NO: 14003502	SHEET NO: 7 of 8

24ga Weather Lok-16 Roof panel.dwg

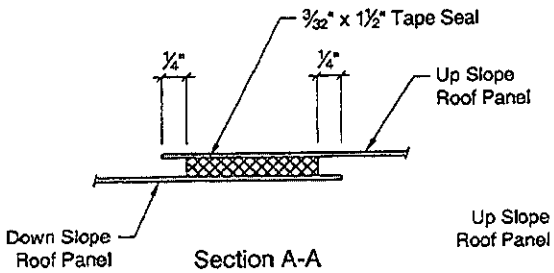

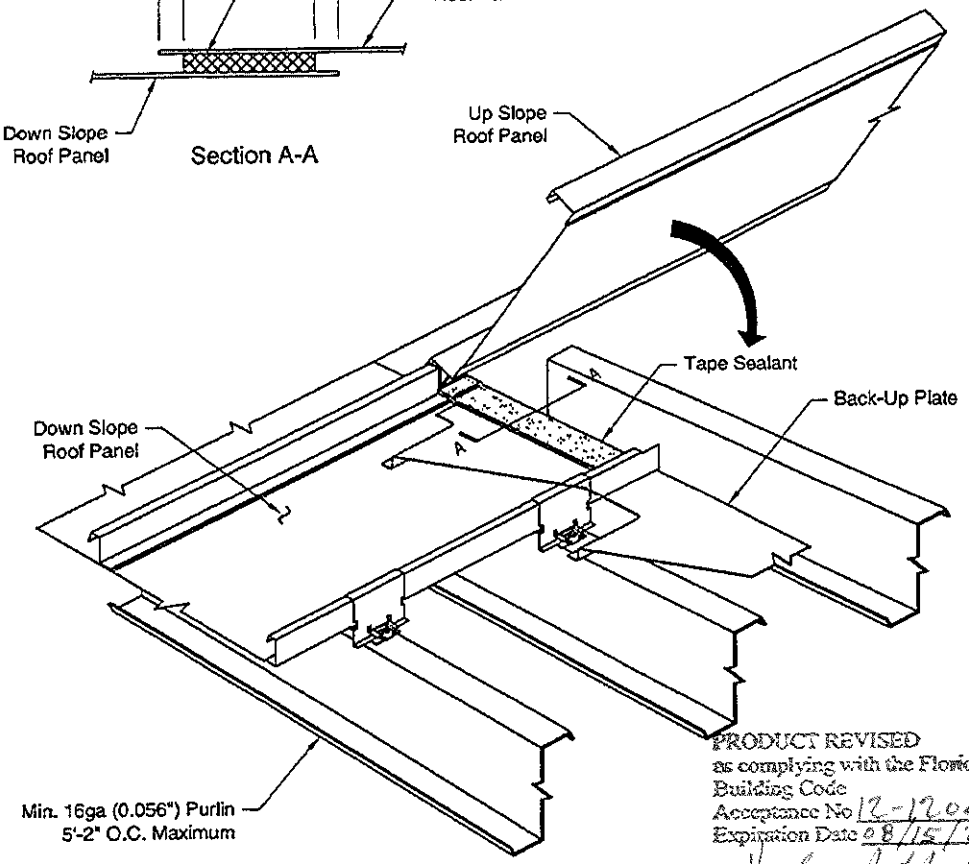

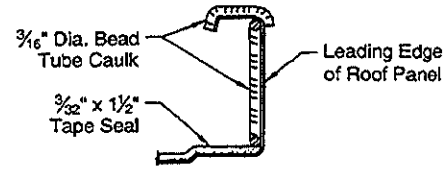

Section @ Leading Edge

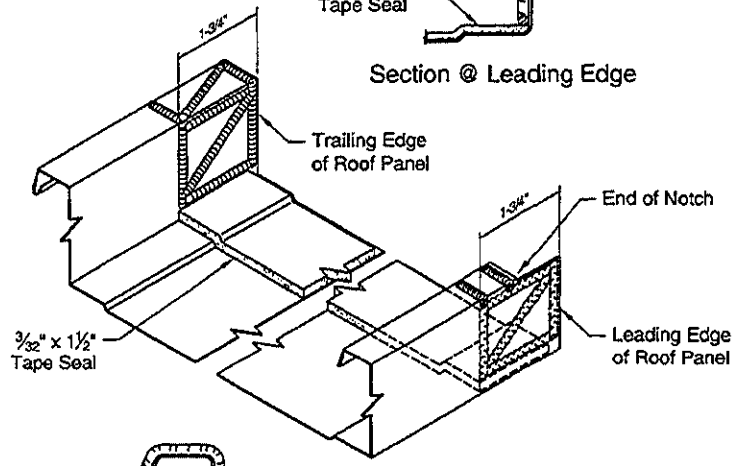

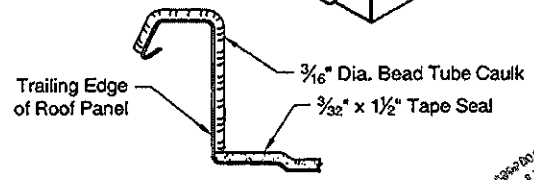

Section @ Trailing Edge

NOTES:

1. Place the 3/32" x 1½" endlap tape seal as shown in the above illustrations. Make sure the tape seal is pressed tightly into the panel bends and corners.
2. Use 3/16" diameter beads for all caulking shown. Caulking cannot have any gaps.

PRODUCT REVISED
as complying with the Florida Building Code
Acceptance No 12-1204.08
Expiration Date 08/15/2018
By
Miami Dade Product Control

DENNIS L. JOHNSON
LICENSE
No 54340
FLORIDA
PROFESSIONAL ENGINEER
06-30-13

NOTES:

1. Position the up slope panel so the total panel lap is 2".
2. The endlap tape seal and the up slope panel are positioned so their edges are ¼" apart. (See section above)
3. When placing the up slope panel care must be taken to prevent moving or wiping the tape seal and caulking from the down slope panel.

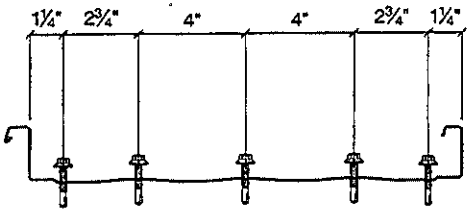

PANEL - LAP FASTENERS

MANUFACTURING ENGINEER: DENNIS JOHNSON, P.E.					
FLORIDA REGISTRATION NO: 54340					
WHIRLWIND STEEL BUILDINGS WEATHER LOK-16 24GA					
WHIRLWIND STEEL BUILDINGS, INC. P.O. BOX 75280 - 8234 HANSEN ROAD HOUSTON, TX 77234 - (713) 946-7140	REL	BY	DESCRIPTION		DATE
PROJECT: PRODUCT APPROVAL					
SHEET TITLE: WEATHER lOK-16 24GA DETAILS	DWN BY:		DATE: 3-27-02		
	CHKD BY:		SCALE: N.T.S.		
LOCATION: FLORIDA	PROJECT NUMBER:		DWG NO: 14003502	SHEET NO: 8 of 8	

24ga Weather Lok-16 Roof panel.dwg