DEPARTMENT OF REGULATORY AND ECONOMIC RESOURCES (RER)
BOARD AND CODE ADMINISTRATION DIVISION

MIAMI-DADE COUNTY
PRODUCT CONTROL SECTION
11805 SW 26 Street, Room 208
Miami, Florida 33175-2474
T (786) 315-2590 F (786) 315-2599
www.miamidade.gov/economy

NOTICE OF ACCEPTANCE (NOA)

DECRA Roofing Systems, Inc.
1230 Railroad St.
Corona, CA. 92882

SCOPE:

This NOA is being issued under the applicable rules and regulations governing the use of construction materials. The documentation submitted has been reviewed and accepted by Miami-Dade County RER - Product Control Section to be used in Miami Dade County and other areas where allowed by the Authority Having Jurisdiction (AHJ).

This NOA shall not be valid after the expiration date stated below. The Miami-Dade County Product Control Section (In Miami Dade County) and/or the AHJ (in areas other than Miami Dade County) reserve the right to have this product or material tested for quality assurance purposes. If this product or material fails to perform in the accepted manner, the manufacturer will incur the expense of such testing and the AHJ may immediately revoke, modify, or suspend the use of such product or material within their jurisdiction. RER reserves the right to revoke this acceptance, if it is determined by Miami-Dade County Product Control Section that this product or material fails to meet the requirements of the applicable building code.
This product is approved as described herein, and has been designed to comply with the Florida Building Code including the High Velocity Hurricane Zone of the Florida Building Code.

DESCRIPTION: DECRA Ridge Vent

LABELING: Each unit shall bear a permanent label with the manufacturer's name or logo, city, state and following statement: "Miami-Dade County Product Control Approved", unless otherwise noted herein.

RENEWAL of this NOA shall be considered after a renewal application has been filed and there has been no change in the applicable building code negatively affecting the performance of this product.

TERMINATION of this NOA will occur after the expiration date or if there has been a revision or change in the materials, use, and/or manufacture of the product or process. Misuse of this NOA as an endorsement of any product, for sales, advertising or any other purposes shall automatically terminate this NOA. Failure to comply with any section of this NOA shall be cause for termination and removal of NOA.

ADVERTISEMENT: The NOA number preceded by the words Miami-Dade County, Florida, and followed by the expiration date may be displayed in advertising literature. If any portion of the NOA is displayed, then it shall be done in its entirety.

INSPECTION: A copy of this entire NOA shall be provided to the user by the manufacturer or its distributors and shall be available for inspection at the job site at the request of the Building Official.

This NOA consists of pages 1 through 4.
The submitted documentation was reviewed by Alex Tigera.

ROOFING COMPONENT APPROVAL

Category: Roofing
Sub-Category: Ventilation
Material: Plastic
Minimum Slope: 2:12

TRADE NAMES OF PRODUCTS MANUFACTURED OR LABELED BY APPLICANT

Product	Dimensions	Test Specification	Product Description
DECRA Ridge Vent	Ht. = 1" Width = 2-1/2" Lengths = 20' roll	TAS 100(A)	Plastic low profile attic ridge vent consisting of a fiber mesh composite, for installation with DECRA Shake and DECRA Shingle roof systems with the DECRA Hip and Ridge Shake.

MANUFACTURING LOCATION

1. Corona, CA.

EVIDENCE SUBMITTED

Test Agency/Identifier	Name	Report	Date
PRI Construction Materials	DECR-015-02-01	TAS-100(A)	04/19/12
Architectural Testing	56017.09-122-18	ASTM D 1929 ASTM D635 ASTM D 2843	09/25/07 06/13/07

APPROVED APPLICATIONS:

Trade Name: DECRA Ridge Vent

System Type A: Mechanical attachment of static ridge vent over metal roof panels and under Metal roof ridge cap.

Installation:

1. Allow a 3" opening centered in the deck at the ridge for ventilation. The slot shall terminate approximately 12" from the rake edges.

2. Install 2" x 2" wood battens along the ridge. Align the top edge of the battens along the edge of the plywood on both sides of the ridge to expose the attic opening. Measure, cut, bend, and install the final course of panels.

3. Remove the 1 x 4 spacer and roll out the vent material along the top of the battens. Remove the white paper while unrolling to expose adhesive dots. Apply pressure over the adhesive dots to hold material in place during installation.

4. Install the DECRA Hip and Ridge Shake over the vent material. Fasten with #9 x 1-1/2" screws 13"o.c. through the vent material into the battens.

Net Free Area: Refer to Manufacturer's Published Literature

Minimum Slope: 2:12

LIMITATIONS:

1. Refer to applicable Building Code required ventilation.
2. DECRA Ridge Vent shall comply with applicable Building Code.
3. DECRA Ridge Vent shall not be installed on roof mean heights greater than 33 feet.
4. All products listed herein shall have a quality assurance audit in accordance with the Florida Building Code and Rule 9N-3 of the Florida Administrative Code.

DETAIL A

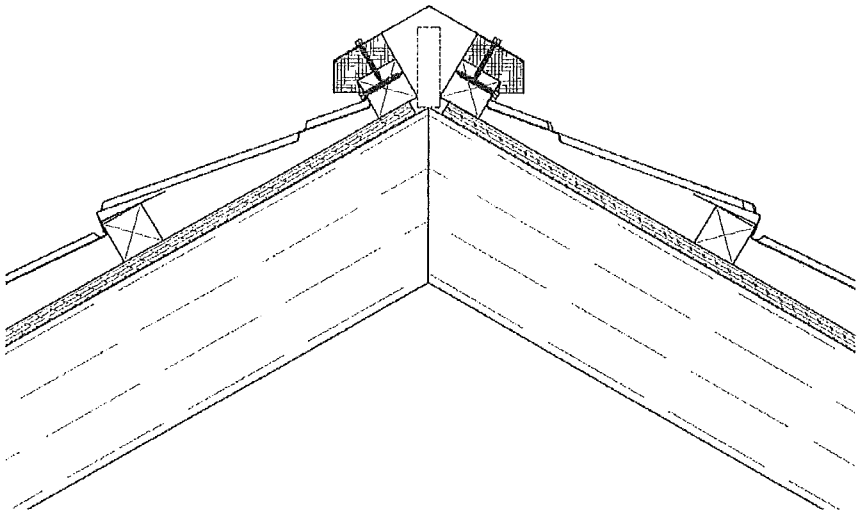

END OF THIS ACCEPTANCE