MIAMI-DADE COUNTY
PRODUCT CONTROL SECTION
11805 SW 26 Street, Room 208
Miami, Florida 33175-2474
T (786) 315-2590 F (786) 315-2599
www.miamidade.gov/economy

DEPARTMENT OF REGULATORY AND ECONOMIC RESOURCES (RER)
BOARD AND CODE ADMINISTRATION DIVISION

NOTICE OF ACCEPTANCE (NOA)

Pinecrest Industries of FlA, Inc.
7457 Commercial Circle,
Fort Pierce, Florida 34951

SCOPE:
This NOA is being issued under the applicable rules and regulations governing the use of construction materials. The documentation submitted has been reviewed and accepted by Miami-Dade County RER - Product Control Section to be used in Miami Dade County and other areas where allowed by the Authority Having Jurisdiction (AHJ).
This NOA shall not be valid after the expiration date stated below. The Miami-Dade County Product Control Section (In Miami Dade County) and/or the AHJ (in areas other than Miami Dade County) reserve the right to have this product or material tested for quality assurance purposes. If this product or material fails to perform in the accepted manner, the manufacturer will incur the expense of such testing and the AHJ may immediately revoke, modify, or suspend the use of such product or material within their jurisdiction. RER reserves the right to revoke this acceptance, if it is determined by Miami-Dade County Product Control Section that this product or material fails to meet the requirements of the applicable building code.
This product is approved as described herein, and has been designed to comply with the Florida Building Code, including the High Velocity Hurricane Zone.

DESCRIPTION: Pinecrest Series "Wellington, Savoy& Verona" Outswing Wood Door w/wo Transom & Sidelites-Impact.

APPROVAL DOCUMENT: Drawing No. **PIWC-04-2013**, titled "Wellington, Savoy & Verona Series Outswing Wood Door w/wo Transom & sidelites", sheets 1 through 14 of 14, prepared by manufacturer dated 02-25-2013 and last revised on 03-20-13, signed and sealed by William S. Mathers, P.E., bearing the Miami-Dade County Product Control Revision stamp with the Notice of Acceptance number and expiration date by the Miami-Dade County Product Control Section.

MISSILE IMPACT RATING: Large and Small Missile Impact Resistant
Limitations:
1. GU series Multi-point locking at active panel and 2- points locking at inactive panel are required. Door & panel reinforcement plates I, T & H at top & bottom of locking mechanism are also required, as indicated.

LABELING: Each unit shall bear a permanent label with the manufacturer's name or logo, city, state and series and following statement: "Miami-Dade County Product Control Approved", noted herein.

RENEWAL of this NOA shall be considered after a renewal application has been filed and there has been no change in the applicable building code negatively affecting the performance of this product.

TERMINATION of this NOA will occur after the expiration date or if there has been a revision or change in the materials, use, and/or manufacture of the product or process. Misuse of this NOA as an endorsement of any product, for sales, advertising or any other purposes shall automatically terminate this NOA. Failure to comply with any section of this NOA shall be cause for termination and removal of NOA.

ADVERTISEMENT: The NOA number preceded by the words Miami-Dade County, Florida, and followed by the expiration date may be displayed in advertising literature. If any portion of the NOA is displayed, then it shall be done in its entirety.

INSPECTION: A copy of this entire NOA shall be provided to the user by the manufacturer or its distributors and shall be available for inspection at the job site at the request of the Building Official.
This NOA **revises & renews NOA # 08-0229.07** and consists of this page 1 and evidence pages E-1, as well as approval document mentioned above.
The submitted documentation was reviewed by **Ishaq I. Chanda, P.E.**

MIAMI-DADE COUNTY APPROVED

5/29/13

NOA No. 12-1206.05
Expiration Date: February 27, 2018
Approval Date: March 28, 2013

NOTICE OF ACCEPTANCE: EVIDENCE SUBMITTED

A. DRAWINGS

1. Manufacturer's parts drawings and sections (Submitted under file # **08-0229.07**)
2. Drawing No. **PIWC-04-2013**, titled "Wellington, Savoy & Verona Series Outswing Wood Door w/wo Transom & sidelites", sheets 1 through 14 of 14, prepared by manufacturer dated 02-25-2013 and last revised on 03-20-13, signed and sealed by William S. Mathers, P.E.

B. TESTS (Submitted under file # **08-0229.07**) Original test conducted per SFBC PA 201, 202 & 203-94, now termed as FBC TAS 201, 202 & 203-94

1. Test reports on 1) Air Infiltration Test, per PA 202-94
   2) Uniform Static Air Pressure Test, Loading per PA 202-94
   3) Water Resistance Test, per PA 202-94
   4) Large Missile Impact Test per PA 201-94
   5) Cyclic Wind Pressure Loading per PA 203-94
   6) Forced Entry Test, per SFBC 3603.2 (b) and PA 202-94

   along with marked-up drawings and installation diagram of wood casement windows, prepared by Hurricane Engineering & Testing, Inc., Test Report No. **HETI-00-1168, HETI-00-919, HETI-00-935** and **HETI-00-1169** dated August 07, 2000, August 07, 2000, October 27, 2000 and September 27, 2000 respectively, signed and sealed by Hector Medina, P.E.
   (A clarification letter has been issued by Hurricane Engineering Testing Inc. for measurement gauges and impact locations, dated 10-11-02).
2. Additional dissection verification test dated 03/14/13 of series "Savoy" wood French door, issued by National Certified Testing Lab, test report No. NCTL-210-3863-1, signed & sealed by Gerard J. Ferrra, P.E.

C. CALCULATIONS

1. Anchor verification calculations and structural analysis, complying with FBC-2010, prepared by Mathers Engineering Corp., dated 03/20/13, signed and sealed by William S. Mathers, P.E.
2. Glazing complies w/ ASTME-1300-02 & -04

D. QUALITY ASSURANCE

1. Miami Dade Department of Regulatory and Economic Resources (RER).

E. MATERIAL CERTIFICATIONS

1. Notice of Acceptance No. **08-0709.04** issued to Nebula glass Int'l., Inc. dba Glaslam for their "**Safety Plus II ®**", expiring on 08/17/13.

F. STATEMENTS

1. Statement letter of conformance and code review to FBC 2010 and letter of no financial interest, prepared by by Mathers Engineering Corp., dated 06/28/12, signed and sealed by William S. Mathers, P.E.
2. Successor Engineer letter dated 01/27/13 pursuant to chapter 61G15-27.001of F.A.C. for reuse of original Drawings and full responsibility, signed by William S. Mathers, P.E.
3. Clarification of statement letter dated March 07, issued by Pinecrest Industries referenced to sample test size deviation, signed by Ms. Laura Carlson.
4. Lab compliance as part of the above referenced test report.

G. OTHER

1. This NOA **revises & renews NOA # 08-0229.07**, expiring on FEB 27, 2018.
2. Test proposal by Pinecrest Industries, approved by BCCO dated 07-20-00.

Ishaq I. Chanda, P.E.
Product Control Examiner
NOA No. 12-1206.05
Expiration Date: February 27, 2018
Approval Date: March 28, 2013

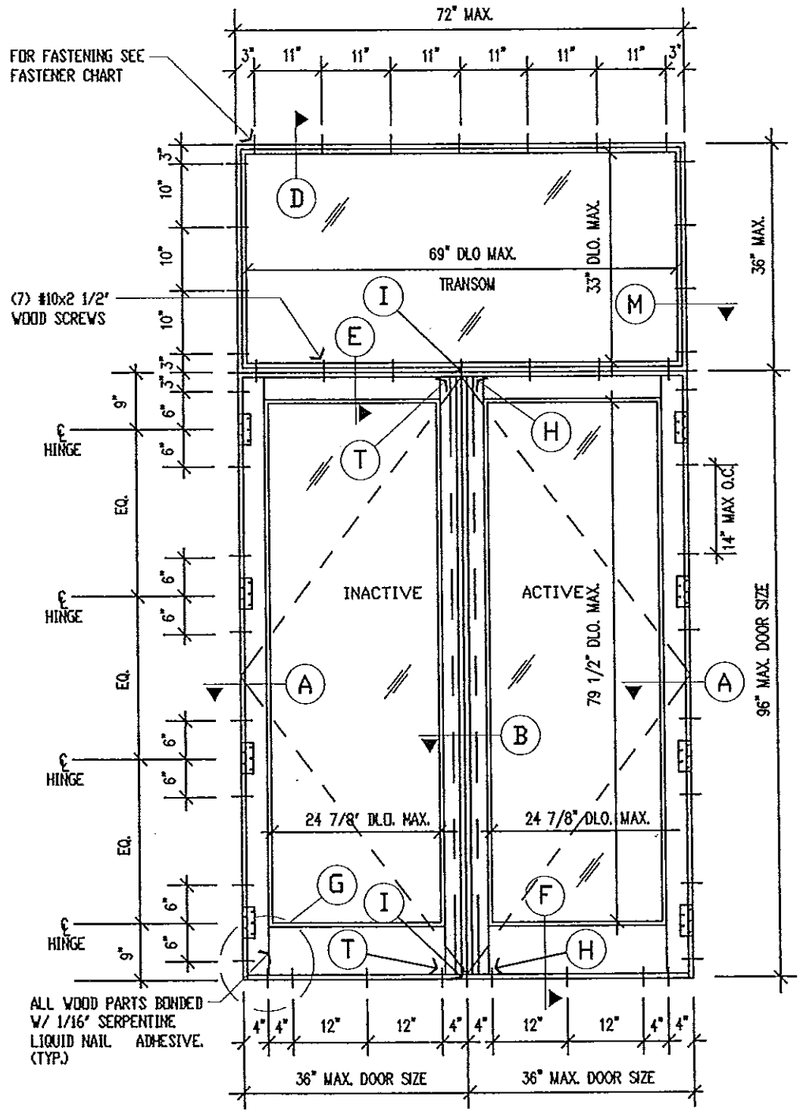

1 WELLINGTON SERIES - OUTSWING DOUBLE WOOD DOOR W/TRANSOM

O
XX

ALL ELEVATIONS VIEWED FROM EXTERIOR

DESIGN LOADS (PSF)
+50, -55
IMPACT RESISTANT

NOTES:

1- THIS DOOR SYSTEM IS IMPACT RESISTANT. HURRICANE PROTECTION IS NOT REQUIRED.
2- PROVIDE 1/4" MAXIMUM SHIM SPACE.
3- MATERIAL : MAHOGANY WOOD.
4- GLAZING: SAFETY-PLUS II® LAMINATED GLASS by GLASSLAM N.G.I., INC. (PER CURRENT NOA). 1/2" OVERALL THICKNESS CONSISTING OF: 3/16" ANNEALED GLASS + 0.10" POLYLAM POLYURETHANE LAMINATING POLYMER BY GLASSLAM + 3/16" ANNEALED GLASS.
5- O/H: OPPOSITE HAND.
6- DOOR SYSTEM CAN BE FASTENED TO 2X WOOD BUCKS PER FASTENER SCHEDULE SHOWN IN THIS DRAWING.
7- ATTACHMENT OF 2X WOOD BUCKS TO STRUCTURE SHALL BE DESIGNED BY A LICENSED ARCHITECT OR REGISTERED PROFESSIONAL ENGINEER.
8- ALL 2X WOOD BUCKS PROVIDED BY OTHERS MUST BE VISUALLY GRADED SOUTHERN PINE NO. 3 (STUD). LUMBER SPECIES AND GRADES THAT ARE BETTER OR EQUAL ARE ACCEPTABLE.
9- THIS DOOR SYSTEM HAS BEEN DESIGNED PER 2010 FLORIDA BUILDING CODE.

LOCATION	FASTENER TYPE, SPACING AND QUANTITY FOR WELLINGTON SERIES
TRANSON HEADER	USE (7) #14 SMS AT 11" O.C. STARTING 3" FROM CORNERS WITH 1-1/2" MIN. EMBEDMENT INTO WOOD BUCK
TRANSON JAMB	USE (4) #14 SMS AT 10" O.C. STARTING 3" FROM CORNERS WITH 1-1/2" MIN. EMBEDMENT INTO WOOD BUCK
DOOR JAMB	USE (2) #14 SMS AT 6" ABOVE AND BELOW EACH HINGE CENTER (TOTAL 8 SCREWS) WITH 1-1/2" MIN. EMBEDMENT INTO WOOD BUCK
THRESHOLD	USE (9) #14 SMS WOOD SCREWS WITH 1-1/2" MIN. EMBEDMENT INTO WOOD BUCK OR 1/4" TAPCONS BY "ELCO" WITH 1-1/2" MIN. EMBEDMENT INTO CONCRETE WITH MINIMUM 2 1/2" EDGE DISTANCE.

PRODUCT REVISED
as complying with the Florida
Building Code
Acceptance No. 12-1206.05
Expiration Date FEB 27, 2018
By Craig L. Chandler
Miami Dade Product Control

MATHERS ENGINEERING CORPORATION
CIVIL STRUCTURAL ARCHITECTURE LAND PLANNING
2431 SE DIXIE HWY
STUART, FL 34996
PHONE: (772) 287-0525
FAX: (772) 220-8688
AA C002026
EB 0004456
WILLIAM S. MATHERS, PE
FL# 56698

3-26-13

PROJECT: PINECREST INDUSTRIES OF FLA., INC.
7457 COMMERCIAL CIRCLE
FORT PIERCE, FL 34951

SHEET TITLE: WELLINGTON SERIES
OUTSWING DOUBLE WOOD DOOR
W/ TRANSOM

DATE 02-25-2013
SCALE AS NOTED
DWN. BY MM | CKD. BY JFV
JOB NO. 826-01
DRAWING NO. PWC-04-2013
1 OF 14

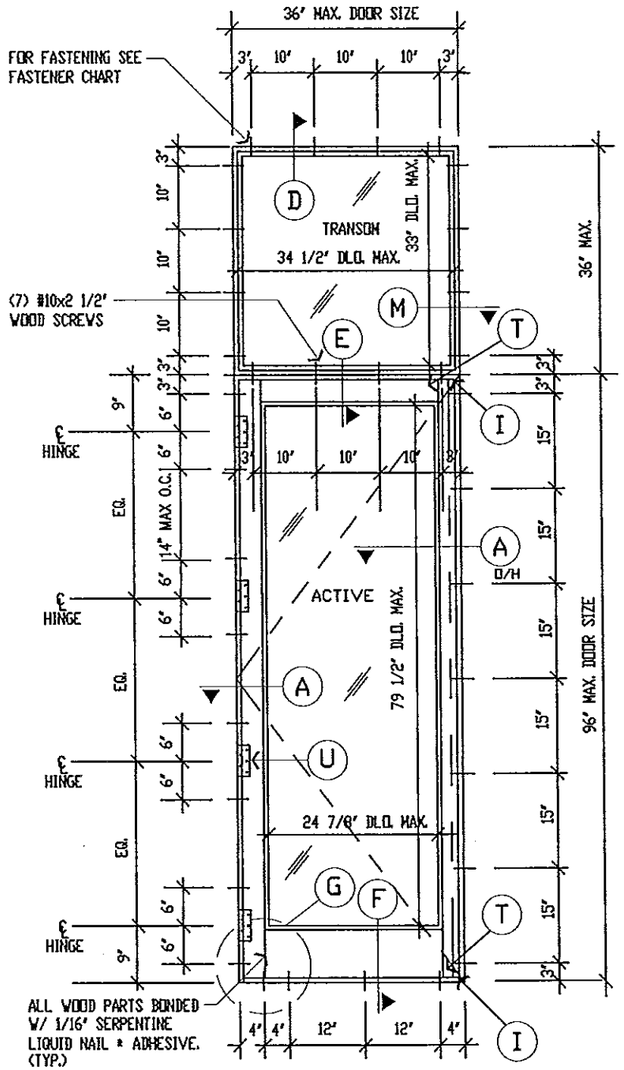

1A WELLINGTON SERIES - OUTSWING SINGLE WOOD DOOR W/TRANSOM

O/X

ALL ELEVATIONS VIEWED FROM EXTERIOR

DESIGN LOADS (PSF)
+50, -55
IMPACT RESISTANT

NOTES:

1- THIS DOOR SYSTEM IS IMPACT RESISTANT. HURRICANE PROTECTION IS NOT REQUIRED.
2- PROVIDE 1/4" MAXIMUM SHIM SPACE.
3- MATERIAL : MAHOGANY WOOD.
4- GLAZING: SAFETY-PLUS II® LAMINATED GLASS by GLASSLAM N.G.I., INC. (PER CURRENT NOA). 1/2" OVERALL THICKNESS CONSISTING OF: 3/16" ANNEALED GLASS + 0.10" POLYLAM POLYURETHANE LAMINATING POLYMER BY GLASSLAM + 3/16" ANNEALED GLASS.
5- O/H: OPPOSITE HAND.
6- DOOR SYSTEM CAN BE FASTENED TO 2X WOOD BUCKS PER FASTENER SCHEDULE SHOWN IN THIS DRAWING.
7- ATTACHMENT OF 2X WOOD BUCKS TO STRUCTURE SHALL BE DESIGNED BY A LICENSED ARCHITECT OR REGISTERED PROFESSIONAL ENGINEER.
8- ALL 2X WOOD BUCKS PROVIDED BY OTHERS MUST BE VISUALLY GRADED SOUTHERN PINE NO. 3 (STUD). LUMBER SPECIES AND GRADES THAT ARE BETTER OR EQUAL ARE ACCEPTABLE.
9- THIS DOOR SYSTEM HAS BEEN DESIGNED PER 2010 FLORIDA BUILDING CODE.

LOCATION	FASTENER TYPE, SPACING AND QUANTITY FOR WELLINGTON SERIES
TRANSON HEADER	USE (4) #14 SMS AT 11" O.C. STARTING 3" FROM CORNERS WITH 1-1/2" MIN. EMBEDMENT INTO WOOD BUCK
TRANSON JAMB	USE (4) #14 SMS AT 10" O.C. STARTING 3" FROM CORNERS WITH 1-1/2" MIN. EMBEDMENT INTO WOOD BUCK
DOOR JAMB	USE (2) #14 SMS AT 6" ABOVE AND BELOW EACH HINGE CENTER (TOTAL 8 SCREWS) WITH 1-1/2" MIN. EMBEDMENT INTO WOOD BUCK
THRESHOLD	USE (4) #14 SMS WOOD SCREWS WITH 1-1/2" MIN. EMBEDMENT INTO WOOD BUCK OR 1/4" TAPCONS BY 'ELCO' WITH 1-1/2" MIN. EMBEDMENT INTO CONCRETE WITH MINIMUM 2 1/2" EDGE DISTANCE.
DOOR JAMB @ LOCK SIDE	USE (7) #14 SMS WOOD SCREWS WITH 1-1/2" MIN. EMBEDMENT INTO WOOD BUCK

PRODUCT REVISED
as complying with the Florida Building Code
Acceptance No. 12-1206.05
Expiration Date 02/27/18
By Ichng I. Chang
Miami Dade Product Control

PHONE: (772) 287-0525
FAX: (772) 220-8688
2431 SE DIXIE HWY
STUART, FL 34996
AA C002026
EB 0004456
MATHERS ENGINEERING CORPORATION
CIVIL STRUCTURAL ARCHITECTURE LAND PLANNING
3-20-13
WILLIAM S. MATHERS, PE
FL #56698

PROJECT: PINECREST INDUSTRIES OF FLA., INC.
7457 COMMERCIAL CIRCLE
FORT PIERCE, FL 34951

SHEET TITLE: WELLINGTON SERIES
OUTSWING SINGLE WOOD DOOR
W/ TRANSOM

DATE 02-25-2013
SCALE AS NOTED
DWN. BY MM | CKD. BY JFV
JOB NO. 826-01
DRAWING NO. PIWC-04-2013
2 OF 14

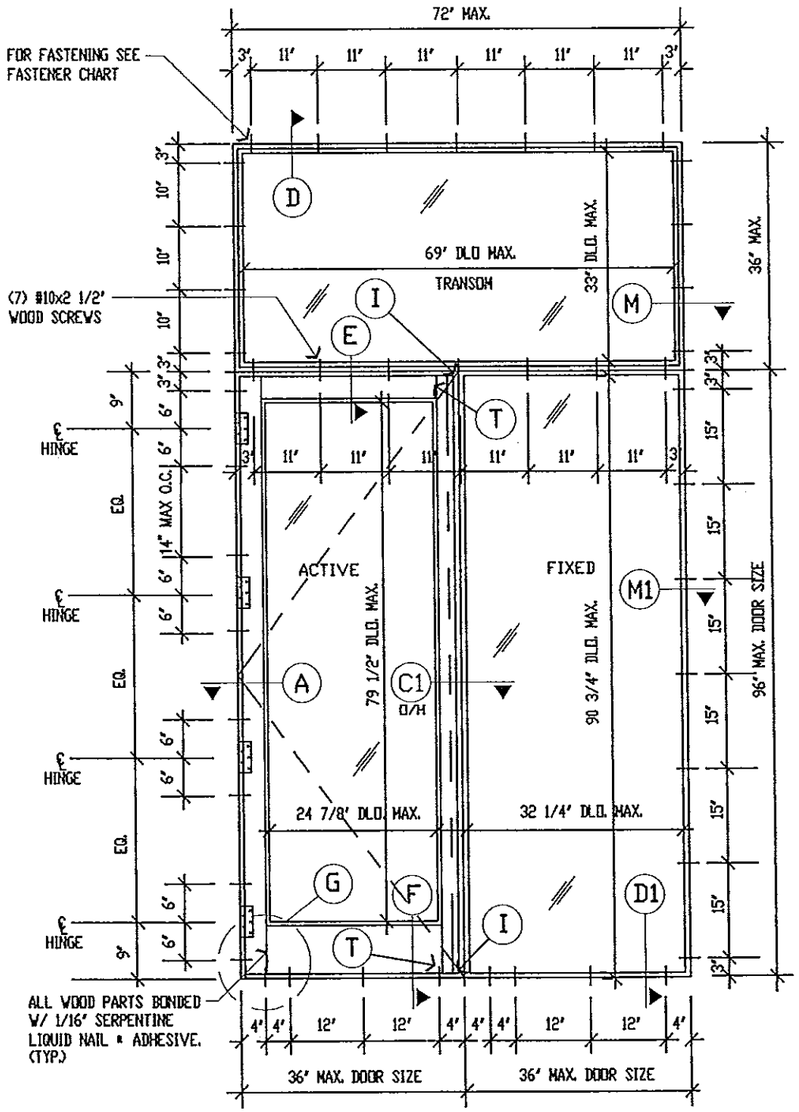

1B WELLINGTON SERIES - OUTSWING SINGLE WOOD DOOR W/1 SIDELITE & TRANSOM

O/XO OR O/OX

ALL ELEVATIONS VIEWED FROM EXTERIOR

DESIGN LOADS (PSF)
+50, -55
IMPACT RESISTANT

NOTES:

1- THIS DOOR SYSTEM IS IMPACT RESISTANT. HURRICANE PROTECTION IS NOT REQUIRED.
2- PROVIDE 1/4" MAXIMUM SHIM SPACE.
3- MATERIAL : MAHOGANY WOOD.
4- GLAZING: SAFETY-PLUS II® LAMINATED GLASS by GLASSLAM N.G.I., INC. (PER CURRENT NOA). 1/2" OVERALL THICKNESS CONSISTING OF: 3/16" ANNEALED GLASS + 0.10" POLYLAM POLYURETHANE LAMINATING POLYMER BY GLASSLAM + 3/16" ANNEALED GLASS.
5- O/H: OPPOSITE HAND.
6- DOOR SYSTEM CAN BE FASTENED TO 2X WOOD BUCKS PER FASTENER SCHEDULE SHOWN IN THIS DRAWING.
7- ATTACHMENT OF 2X WOOD BUCKS TO STRUCTURE SHALL BE DESIGNED BY A LICENSED ARCHITECT OR REGISTERED PROFESSIONAL ENGINEER.
8- ALL 2X WOOD BUCKS PROVIDED BY OTHERS MUST BE VISUALLY GRADED SOUTHERN PINE NO. 3 (STUD). LUMBER SPECIES AND GRADES THAT ARE BETTER OR EQUAL ARE ACCEPTABLE.
9- THIS DOOR SYSTEM HAS BEEN DESIGNED PER 2010 FLORIDA BUILDING CODE.

LOCATION	FASTENER TYPE, SPACING AND QUANTITY FOR WELLINGTON SERIES
TRANSON HEADER	USE (7) #14 SMS AT 11" O.C. STARTING 3" FROM CORNERS WITH 1-1/2" MIN. EMBEDMENT INTO WOOD BUCK
TRANSON JAMB	USE (4) #14 SMS AT 10" O.C. STARTING 3" FROM CORNERS WITH 1-1/2" MIN. EMBEDMENT INTO WOOD BUCK
DOOR JAMB	USE (2) #14 SMS AT 6" ABOVE AND BELOW EACH HINGE CENTER (TOTAL 8 SCREWS) WITH 1-1/2" MIN. EMBEDMENT INTO WOOD BUCK
DOOR	USE (4) #14 SMS WOOD SCREWS WITH 1-1/2" MIN. EMBEDMENT INTO WOOD BUCK OR 1/4" TAPCONS BY 'ELCO' WITH 1-1/2" MIN. EMBEDMENT INTO CONCRETE.
SIDE LITE JAMB	USE (7) #14 SMS AT 15" O.C. STARTING 3" FROM CORNERS WITH 1-1/2" MIN. EMBEDMENT INTO WOOD BUCK WITH 1-1/2" MIN. INTO WOOD BUCK
SIDE LITE SILL	USE (4) #14 SMS WITH 1-1/2" EMBEDMENT INTO WOOD BUCK OR 1/4" TAPCONS WITH 1-1/2" MIN. EMBEDMENT INTO CONCRETE WITH MINIMUM 2 1/2" EDGE DISTANCE.

PRODUCT REVISED
as complying with the Florida Building Code
Acceptance No. 12-1206.05
Expiration Date 02/27/18
By Richard L. Chandler
Miami Dade Product Control

MATHERS ENGINEERING CORPORATION
CIVIL STRUCTURAL ARCHITECTURE LAND PLANNING
2431 SE DIXIE HWY
STUART, FL 34996
PHONE: (772) 287-0525
FAX: (772) 220-8886
AA C002026
EB 0004456
WILLIAM S. MATHERS, PE
FL # 56698
3-20-13

PROJECT: PINECREST INDUSTRIES OF FLA., INC.
7457 COMMERCIAL CIRCLE
FORT PIERCE, FL 34951

SHEET TITLE: WELLINGTON SERIES
OUTSWING SINGLE WOOD DOOR
W/ SIDE LITE & TRANSOM

DATE 02-25-2013
SCALE AS NOTED
DWN. BY MM | CKD. BY JFV
JOB NO. 826-01
DRAWING NO. PIWC-04-2013

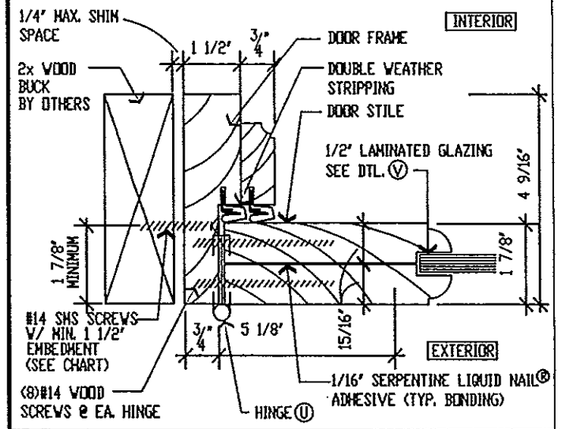

A TYP. DOOR JAMB
SCALE: 3"=1'-0"

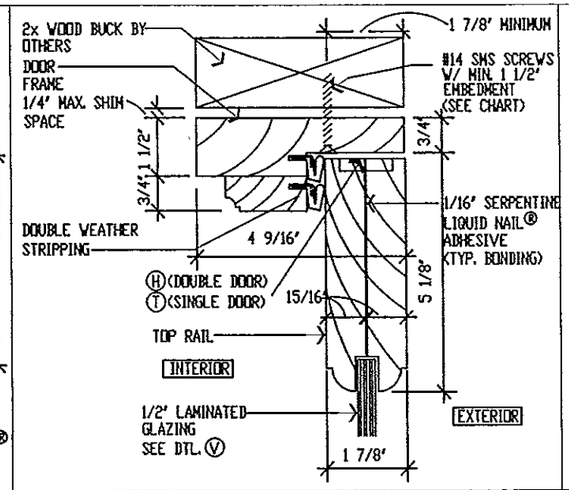

A1 TYP. DOOR HEADER
SCALE: 3"=1'-0"

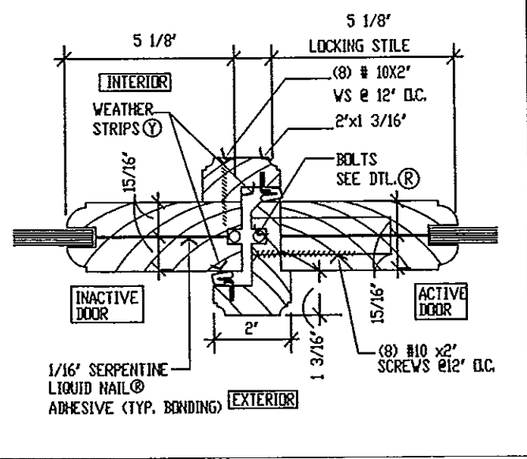

B TYP. ASTRAGAL
SCALE: 3"=1'-0"

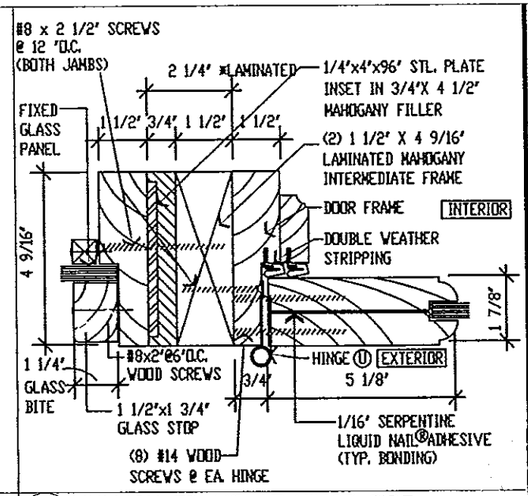

C MULLION FRAME AT HINGE SIDE
SCALE: 3"=1'-0"

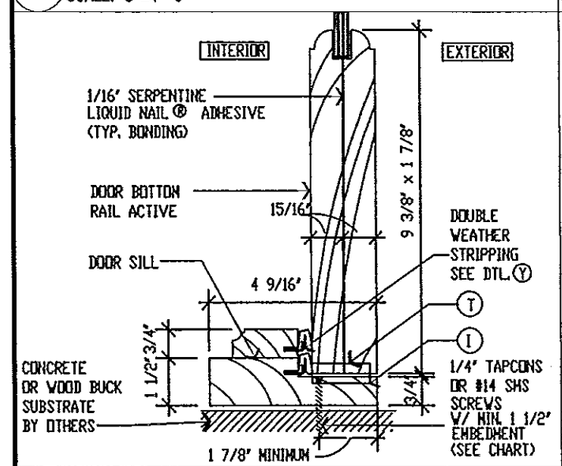

C1 MULLION FRAME AT LOCK SIDE
SCALE: 3"=1'-0"

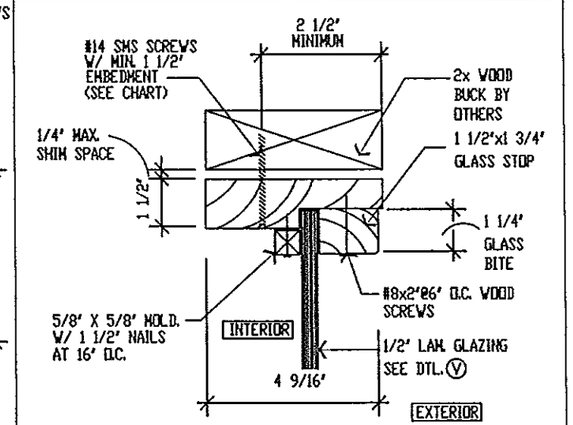

D FIXED PANEL HEAD
SCALE: 3"=1'-0"

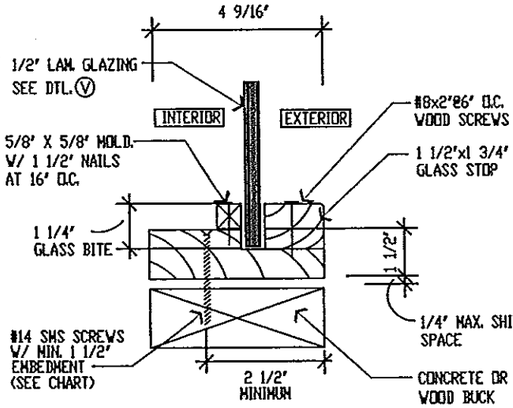

D1 FIXED PANEL SILL
SCALE: 3"=1'-0"

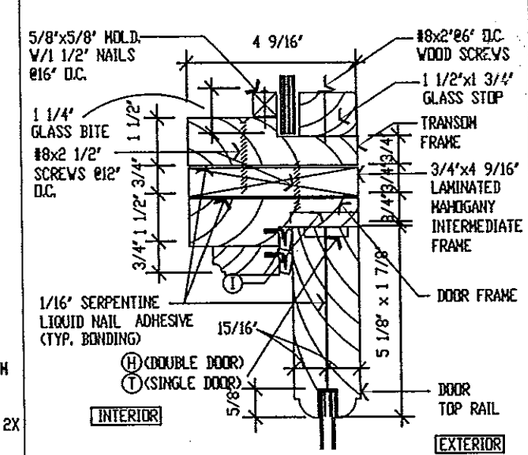

E TRANSOM FRAME
SCALE: 3"=1'-0"

F TYP. THRESHOLD
SCALE: 3"=1'-0"

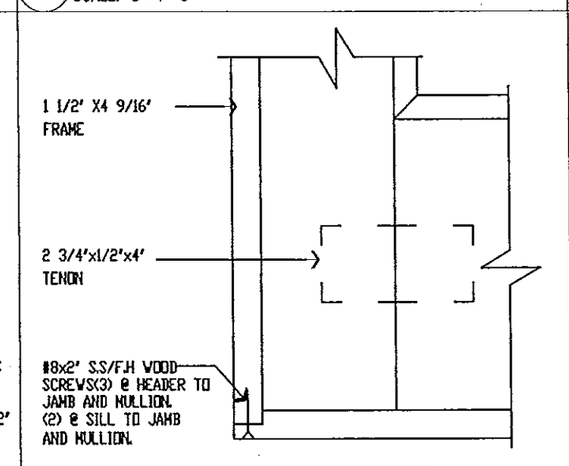

G DOOR CORNER ATTACHMENT
SCALE: 3"=1'-0"

PRODUCT REVISED
as complying with the Florida
Building Code
Acceptance No. 12-1206.05
Expiration Date 02/27/18
By Ishay L. Chang
Miami Dade Product Control

MATHERS ENGINEERING CORPORATION
CIVIL STRUCTURAL ARCHITECTURE LAND PLANNI
PHONE: (772) 287-0
FAX: (772) 220-8
2431 SE DIXIE HWY
STUART, FL 34996
AA C002
EB 0004
3-2-13
WILLIAM S. MATHERS, PE
FL # 56698

PROJECT: PINECREST INDUSTRIES OF FLA., INC.
7457 COMMERCIAL CIRCLE
FORT PIERCE, FL 34951

SHEET TITLE: WELLINGTON SERIES
DOOR DETAILS

DATE 02-25-2013
SCALE AS NOTED
DWN. BY MM CKD. BY JFV
JOB NO. 826-01
DRAWING NO. PIWC-04-2013

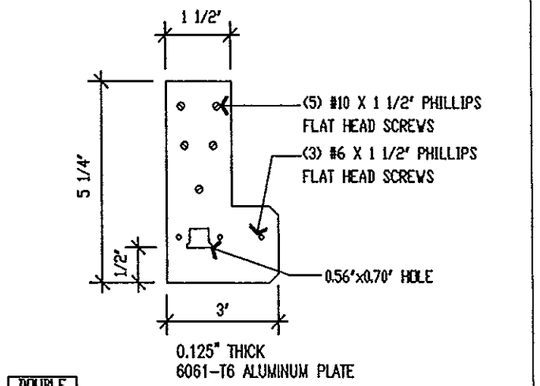

H T-ASTRAGAL TOP / BOTTOM PLATE ACTIVE
SCALE: 3"=1'-0"

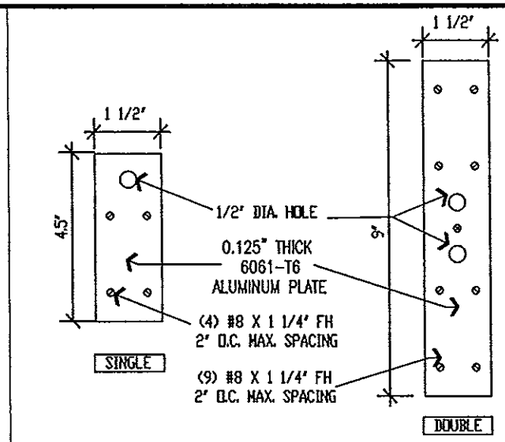

I SILL / HEADER PLATE
SCALE: 3"=1'-0"

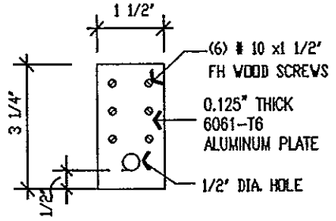

T SINGLE/INACTIVE DOOR TOP/BOTTOM PLATE
SCALE: 3"=1'-0"

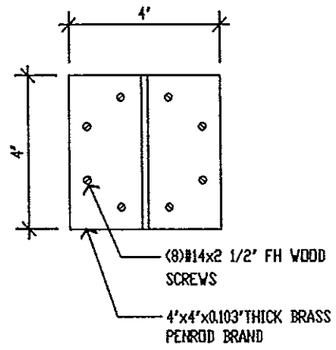

U HINGES (4 PER PANEL)
SCALE: 3"=1'-0"

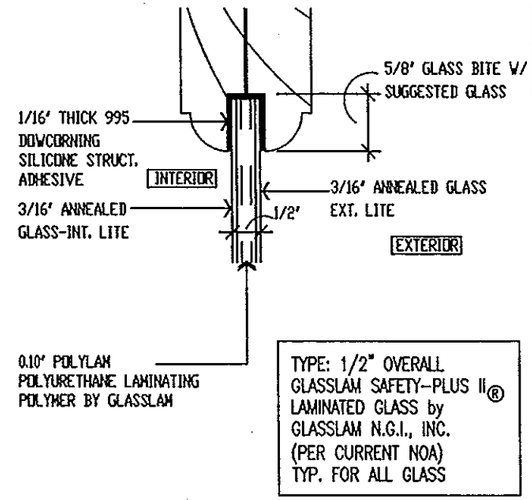

V TYP. GLAZING DETAIL
HALF SCALE

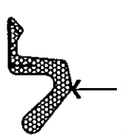

Y TYP. WEATHER STRIP
FULL SCALE

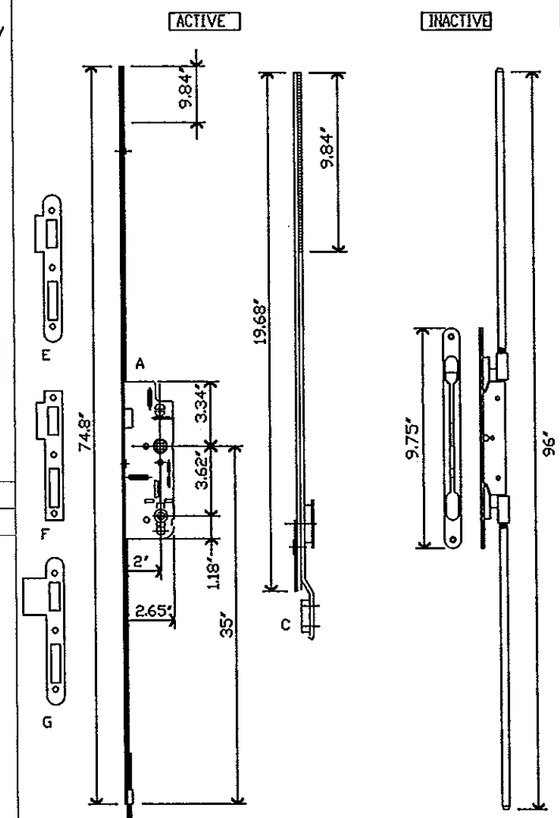

US CREMONA G.U. HARDWARE 2" G-17567 19-0-3 AT ACTIVE

ASTRAGAL MORTISE LOCK G.U. HARDWARE K-15213-00-0-8 W/ GU1010 SERIES RODS AT INNACTIVE

R MULTIPOINT LOCK
ALL DIMENSIONS IN INCHES

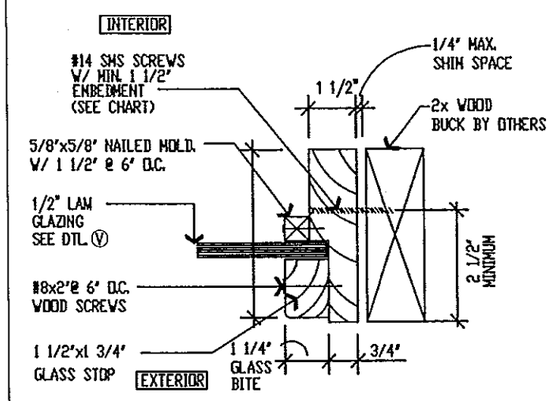

M TRANSOM JAMB
SCALE: 3"=1'-0"

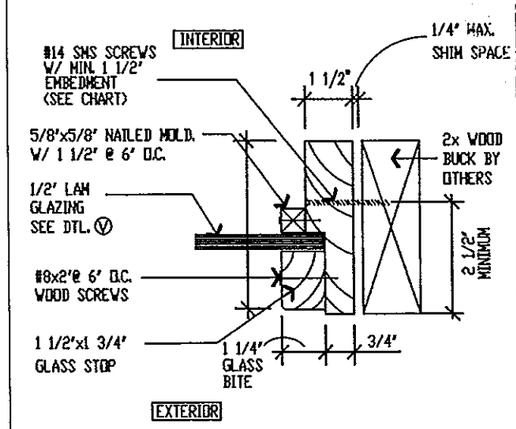

M1 FIXED PANEL JAMB
SCALE: 3"=1'-0"

PRODUCT REVISED
as complying with the Florida
Building Code
Acceptance No. 12-1206.05
Expiration Date 2/27/18
By
Miami Dade Product Control

MATHERS ENGINEERING CORPORATION
CIVIL STRUCTURAL ARCHITECTURE LAND PLANNING
2431 SE DIXIE HWY
STUART, FL 34996
PHONE: (772) 287-0525
FAX: (772) 220-8686
AA C002026
EB 0004456
3-20-13
WILLIAM S. MATHERS, PE
FL # 56698

PROJECT: PINECREST INDUSTRIES OF FLA., INC.
7457 COMMERCIAL CIRCLE
FORT PIERCE, FL 34951

SHEET TITLE: WELLINGTON SERIES DOOR DETAILS

DATE 02-25-2013
SCALE AS NOTED
DWN. BY MM | CKD. BY JFV
JOB NO. 826-01
DRAWING NO. PIWC-04-2013

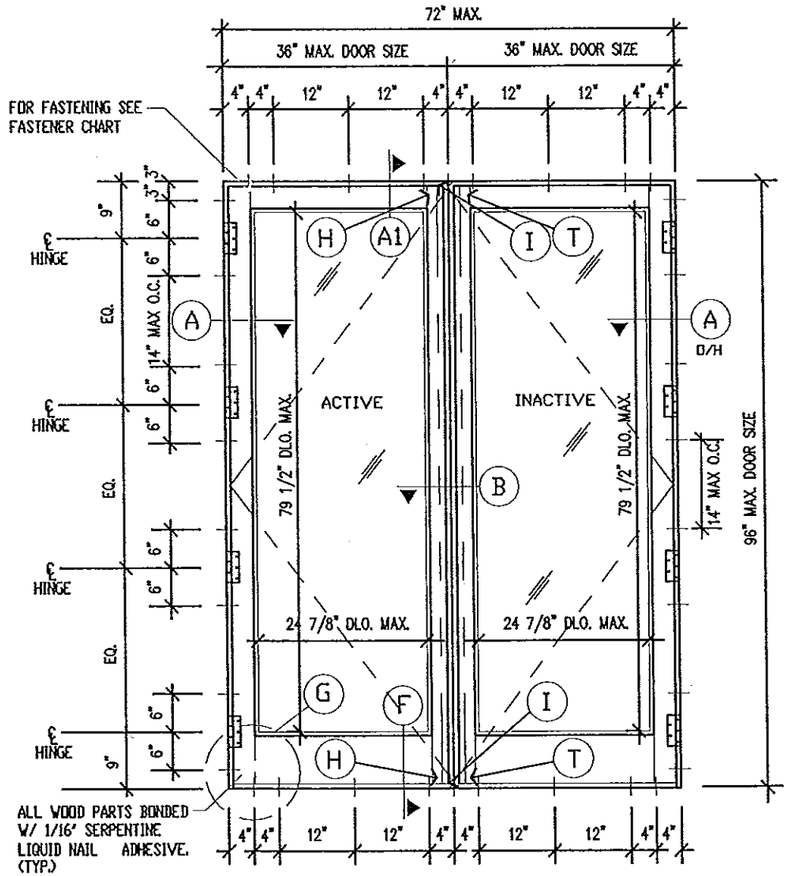

2 SAVOY SERIES - OUTSWING DOUBLE WOOD DOOR
SCALE: 1/2"=1'-0"

XX

ALL ELEVATIONS VIEWED FROM EXTERIOR

DESIGN LOADS (PSF)
+50, -55
IMPACT RESISTANT

NOTES:

1- THIS DOOR SYSTEM IS IMPACT RESISTANT. HURRICANE PROTECTION IS NOT REQUIRED.
2- PROVIDE 1/4" MAXIMUM SHIM SPACE.
3- MATERIAL : MAHOGANY WOOD.
4- GLAZING: SAFETY-PLUS II® LAMINATED GLASS by GLASSLAM N.G.I., INC. (PER CURRENT NOA). 1/2" OVERALL THICKNESS CONSISTING OF: 3/16" ANNEALED GLASS + 0.10" POLYLAM POLYURETHANE LAMINATING POLYMER BY GLASSLAM + 3/16" ANNEALED GLASS.
5- O/H: OPPOSITE HAND.
6- DOOR SYSTEM CAN BE FASTENED TO 2X WOOD BUCKS PER FASTENER SCHEDULE SHOWN IN THIS DRAWING.
7- ATTACHMENT OF 2X WOOD BUCKS TO STRUCTURE SHALL BE DESIGNED BY A LICENSED ARCHITECT OR REGISTERED PROFESSIONAL ENGINEER.
8- ALL 2X WOOD BUCKS PROVIDED BY OTHERS MUST BE VISUALLY GRADED SOUTHERN PINE NO. 3 (STUD). LUMBER SPECIES AND GRADES THAT ARE BETTER OR EQUAL ARE ACCEPTABLE.
9- THIS DOOR SYSTEM HAS BEEN DESIGNED PER 2010 FLORIDA BUILDING CODE.

LOCATION	FASTENER TYPE, SPACING AND QUANTITY FOR VERONA SERIES
THRESHOLD	USE (9) #14 SMS WOOD SCREW WITH MINIMUN 1 1/2" EMBEDMENT INTO WOOD BUCK OR 1/4" TAPCONS BY 'ELCO' WITH 1-1/2" MIN. EMBEDMENT INTO CONCRETE WITH MINIMUN 2 1/2" EDGE DISTANCE.
HEADER	USE (9) #14 SMS WOOD SCREW WITH MINIMUN 1 1/2" EMBEDMENT INTO WOOD BUCK OR 1/4" TAPCONS BY 'ELCO' WITH 1-1/2" MIN. EMBEDMENT INTO CONCRETE.
JAMB	USE (2) #14 SMS WOOD SCREW WITH MINIMUN 1 1/2" EMBEDMENT INTO WOOD BUCK 6" ABOVE AND BELOW EACH HINGE CENTER (TOTAL 8 SCREWS)

PRODUCT REVISED
as complying with the Florida Building Code
Acceptance No. 12-1206.05
Expiration Date 02/27/18
By Ishaq I. Chanda
Miami Dade Product Control

PHONE: (772) 287-0525
FAX: (772) 220-6686
AA C002026
EB 0004456
2431 SE DIXIE HWY
STUART, FL 34996
MATHERS ENGINEERING CORPORATION
CIVIL STRUCTURAL ARCHITECTURE LAND PLANNING
3-20-13
WILLIAM S. MATHERS, PE
FL # 56698

PROJECT: PINECREST INDUSTRIES OF FLA., INC.
7457 COMMERCIAL CIRCLE
FORT PIERCE, FL 34951

SHEET TITLE: SAVOY SERIES
OUTSWING DOUBLE WOOD DOOR

DATE 02-25-2013
SCALE AS NOTED
DWN. BY MM | CKD. BY JFV
JOB NO. 826-01
DRAWING NO. PIWC-04-2013

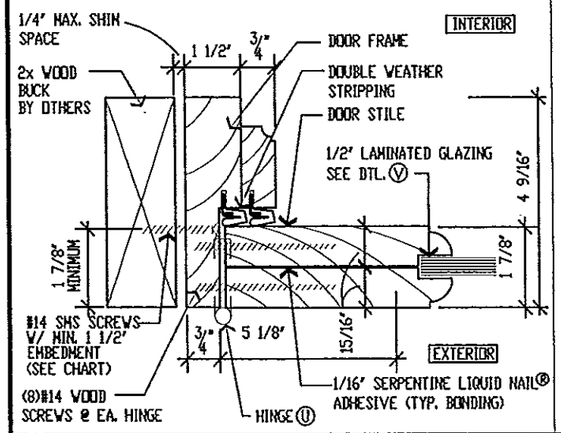

A TYP. DOOR JAMB
SCALE: 3"=1'-0"

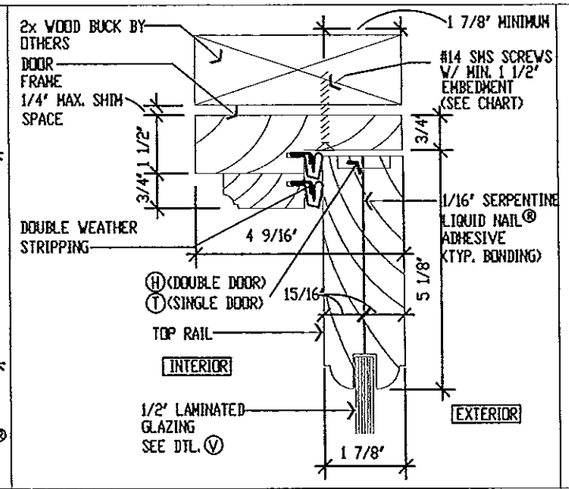

A1 TYP. DOOR HEADER
SCALE: 3"=1'-0"

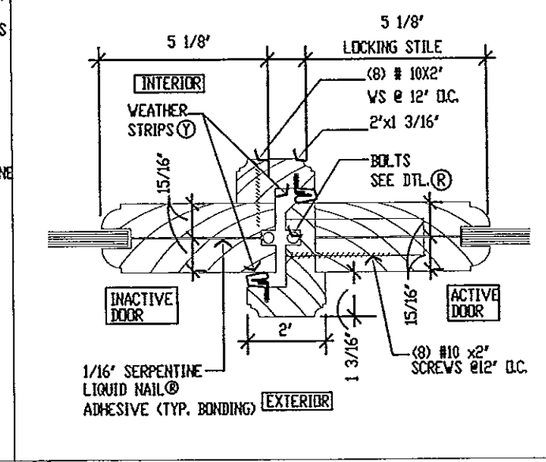

B TYP. ASTRAGAL
SCALE: 3"=1'-0"

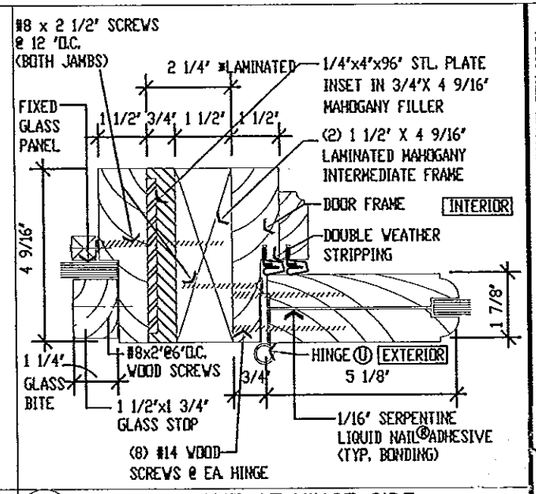

C MULLION FRAME AT HINGE SIDE
SCALE: 3"=1'-0"

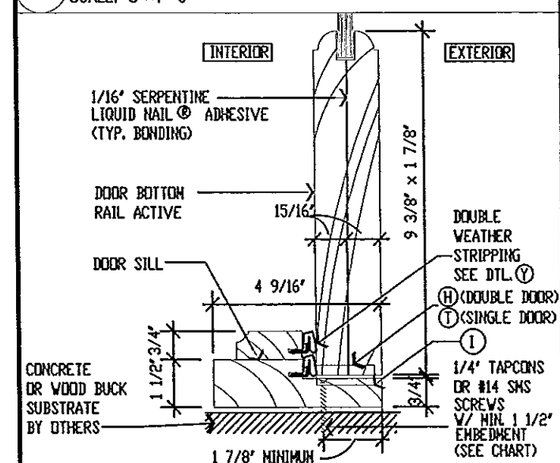

C1 MULLION FRAME AT LOCK SIDE
SCALE: 3"=1'-0"

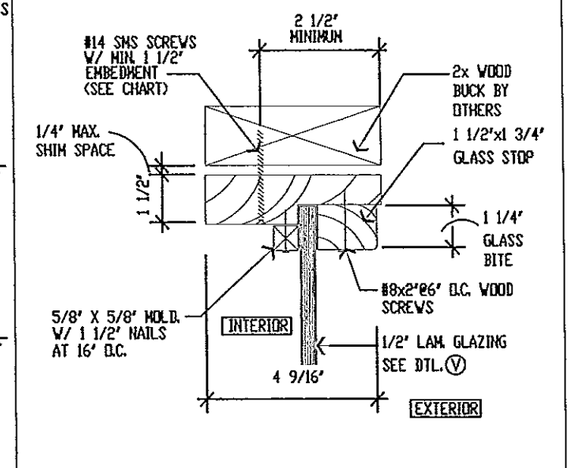

D FIXED PANEL HEAD
SCALE: 3"=1'-0"

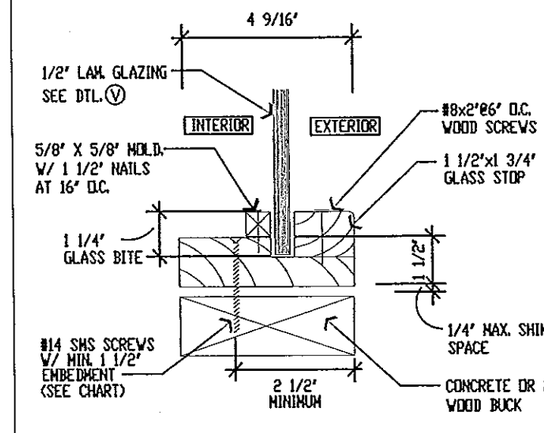

D1 FIXED PANEL SILL
SCALE: 3"=1'-0"

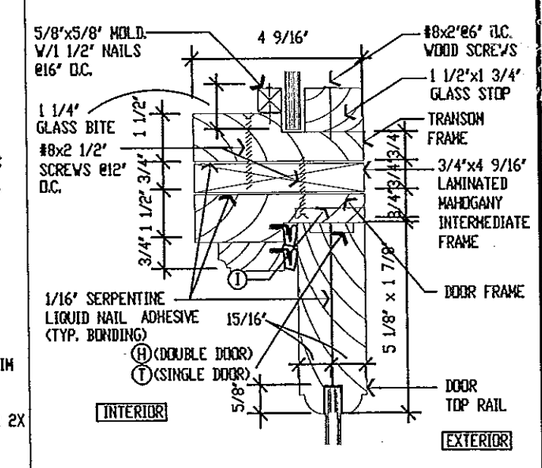

E TRANSOM FRAME
SCALE: 3"=1'-0"

F TYP. THRESHOLD
SCALE: 3"=1'-0"

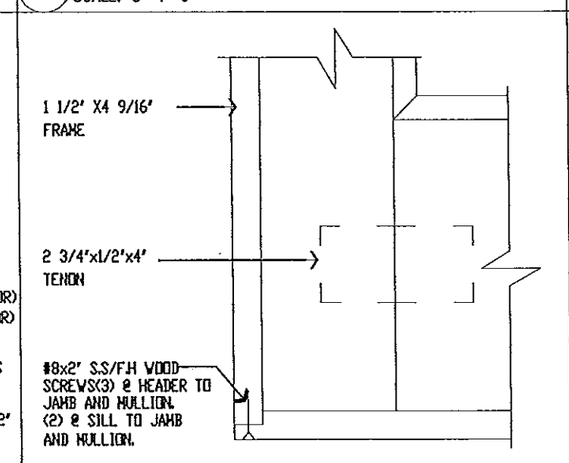

G DOOR CORNER ATTACHMENT
SCALE: 3"=1'-0"

PRODUCT REVISED
as complying with the Florida
Building Code
Acceptance No. 12-1206.05
Expiration Date 02/27/18
By [signature]
Miami Dade Product Control

MATHERS ENGINEERING CORPORATION
CIVIL STRUCTURAL ARCHITECTURE LAND PLANNI
PHONE: (772) 287-0
FAX: (772) 220-8
2431 SE DIXIE HWY
STUART, FL 34996
AA C0002
EB 0004
3-20-13
WILLIAM S. MATHERS, PE
FL # 56698

PROJECT: PINECREST INDUSTRIES OF FLA., INC.
7457 COMMERCIAL CIRCLE
FORT PIERCE, FL 34951

SHEET TITLE: SAVOY SERIES
DOOR DETAILS

DATE 02-25-2013
SCALE AS NOTED
DWN. BY MM | CKD. BY JFV
JOB NO. 826-01
DRAWING NO. PIWC-04-2013

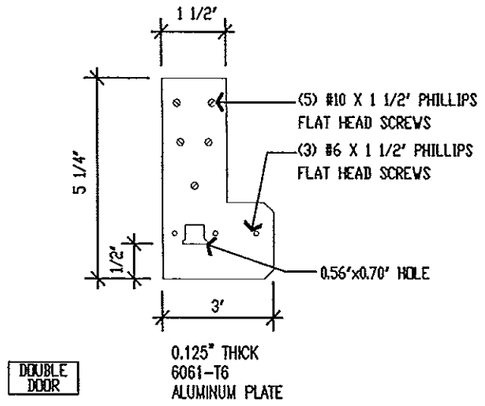

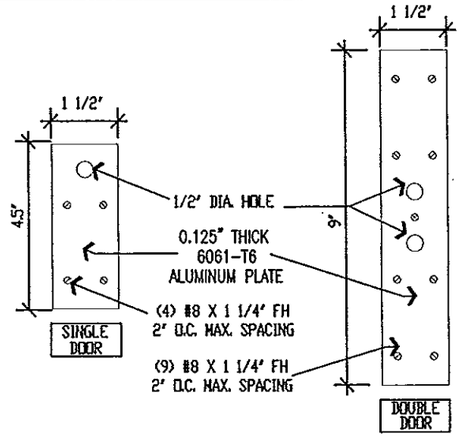

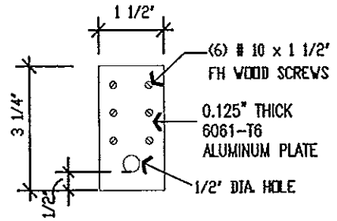

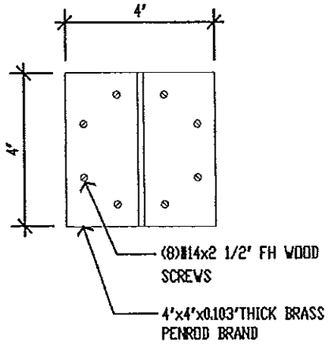

H T-ASTRAGAL TOP / BOTTOM PLATE ACTIVE
SCALE: 3"=1'-0"

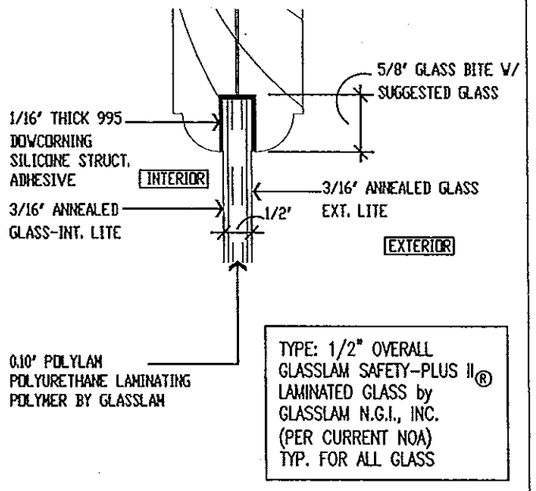

V TYP. GLAZING DETAIL
HALF SCALE

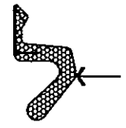

Y TYP. WEATHER STRIP
FULL SCALE

I SILL / HEADER PLATE
SCALE: 3"=1'-0"

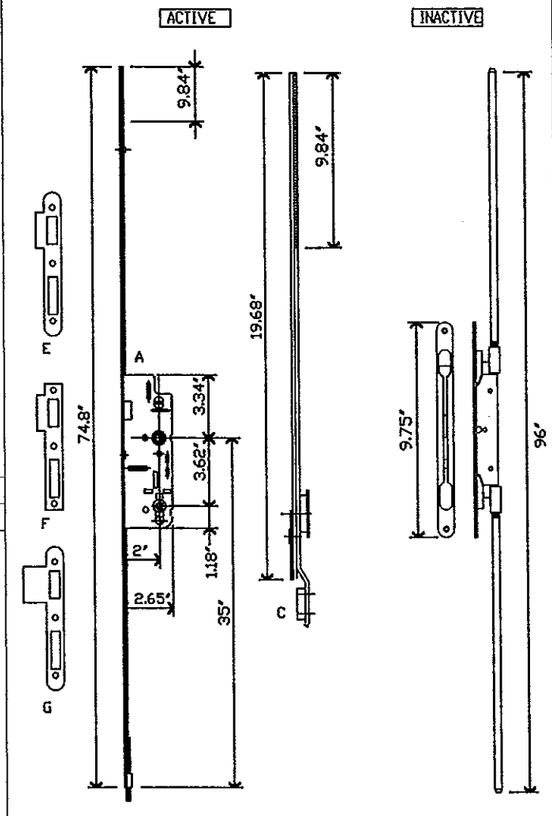

US CRENONA G.U. HARDWARE 2" G-17567 19-0-3 AT ACTIVE

ASTRAGAL MORTISE LOCK G.U. HARDWARE K-15213-00-0-8 W/ GU1010 SERIES RODS AT INNACTIVE

R MULTIPOINT LOCK
ALL DIMENSIONS IN INCHES

T SINGLE/INACTIVE DOOR TOP/BOTTOM PLATE
SCALE: 3"=1'-0"

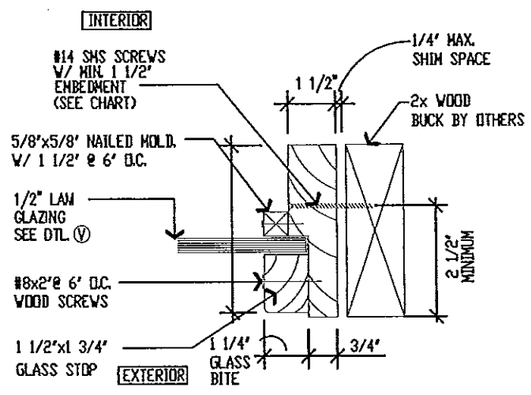

M TRANSOM JAMB
SCALE: 3"=1'-0"

U HINGES (4 PER PANEL)
SCALE: 3"=1'-0"

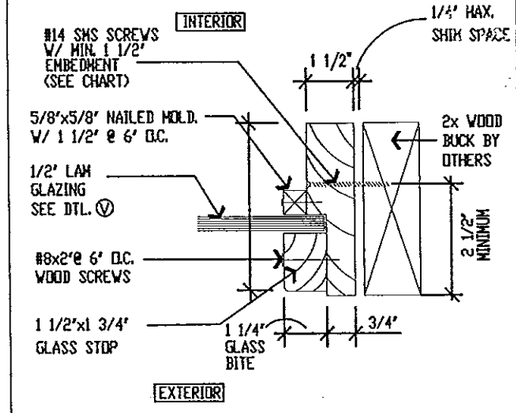

M1 FIXED PANEL JAMB
SCALE: 3"=1'-0"

PRODUCT REVISED
as complying with the Florida Building Code
Acceptance No. 12-1206.05
Expiration Date 02/27/13
By [signature]
Miami Dade Product Covered

MATHERS ENGINEERING CORPORATION
CIVIL STRUCTURAL ARCHITECTURE LAND PLANNING
PHONE: (772) 287-0525
FAX: (772) 220-8686
AA C0002028
EB 0004456
2431 SE DIXIE HWY
STUART, FL 34996
WILLIAM S. MATHERS, PE
FL # 56698

3-22-13

PROJECT: PINECREST INDUSTRIES OF FLA., INC.
7457 COMMERCIAL CIRCLE
FORT PIERCE, FL 34951

SHEET TITLE: SAVOY SERIES DOOR DETAILS

DATE 02-25-2013
SCALE AS NOTED
DWN. BY MM | CKD. BY JFV
JOB NO. 626-01
DRAWING NO. PIWC-04-2013
9 OF 14

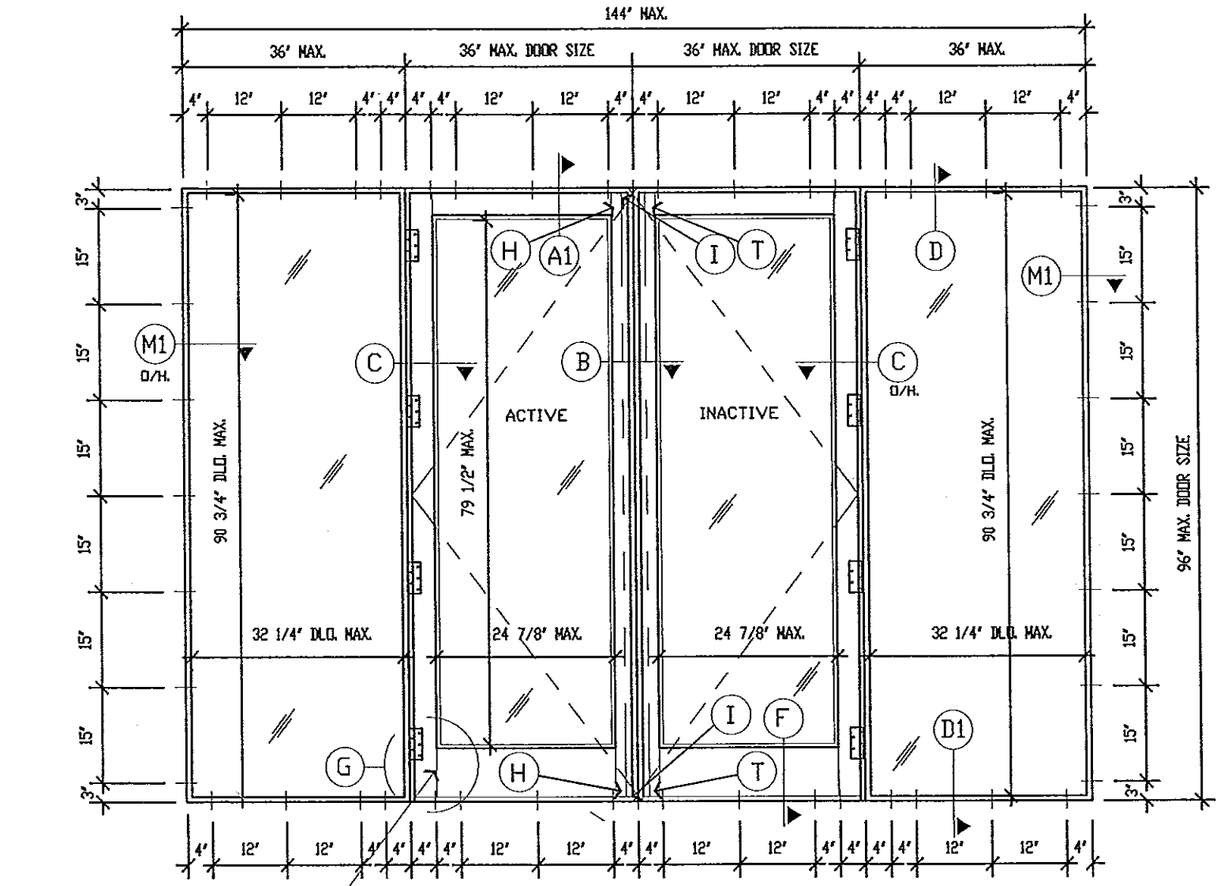

3 VERONA SERIES - OUTSWING DOUBLE WOOD DOOR W/SIDE LITES

SCALE: 1/2"=1'-0"

OXXO

NOTES:

1- THIS DOOR SYSTEM IS IMPACT RESISTANT. HURRICANE PROTECTION IS NOT REQUIRED.
2- PROVIDE 1/4" MAXIMUM SHIM SPACE.
3- MATERIAL : MAHOGANY WOOD.
4- GLAZING: SAFETY-PLUS II® LAMINATED GLASS by GLASSLAM N.G.I., INC. (PER CURRENT NOA). 1/2" OVERALL THICKNESS CONSISTING OF: 3/16" ANNEALED GLASS + 0.10" POLYLAM POLYURETHANE LAMINATING POLYMER BY GLASSLAM + 3/16" ANNEALED GLASS.
5- O/H: OPPOSITE HAND.
6- DOOR SYSTEM CAN BE FASTENED TO 2X WOOD BUCKS PER FASTENER SCHEDULE SHOWN IN THIS DRAWING.
7- ATTACHMENT OF 2X WOOD BUCKS TO STRUCTURE SHALL BE DESIGNED BY A LICENSED ARCHITECT OR REGISTERED PROFESSIONAL ENGINEER.
8- ALL 2X WOOD BUCKS PROVIDED BY OTHERS MUST BE VISUALLY GRADED SOUTHERN PINE NO. 3 (STUD). LUMBER SPECIES AND GRADES THAT ARE BETTER OR EQUAL ARE ACCEPTABLE.
9- THIS DOOR SYSTEM HAS BEEN DESIGNED PER 2010 FLORIDA BUILDING CODE.

LOCATION	FASTENER TYPE, SPACING AND QUANTITY FOR VERONA SERIES
DOOR HEADER AND THRESHOLD	USE (9) #14 SMS WOOD SCREW WITH MINIMUN 1 1/2" EMBEDMENT INTO WOOD BUCK OR 1/4" TAPCONS BY 'ELCO' WITH 1-1/2" MIN. EMBEDMENT INTO CONCRETE AND 2 1/2" MINIMUM EDGE DISTANCE.
SIDE LITE HEADER AND SILL	USE (4) #14 SMS WOOD SCREW WITH MINIMUN 1 1/2" EMBEDMENT INTO WOOD BUCK OR 1/4" TAPCONS BY 'ELCO' W/ 1 1/2" EMBEDMENT INTO CONCRETE
JAMBS @ SIDE LITE	USE (7) #14 SMS WOOD SCREW WITH MINIMUN 1 1/2" EMBEDMENT INTO WOOD BUCK

ALL ELEVATIONS VIEWED FROM EXTERIOR

DESIGN LOADS (PSF)
+50, -55
IMPACT RESISTANT

PRODUCT REVISED
as complying with the Florida Building Code
Acceptance No 12-1206.05
Expiration Date 02/27/18
By
Miami Dade Product Control

MATHERS ENGINEERING CORPORATION
CIVIL STRUCTURAL ARCHITECTURE LAND PLANNING
2431 SE DIXIE HWY
STUART, FL 34996
PHONE: (772) 287-0525
FAX: (772) 220-6686
AA C002026
EB 0004456
WILLIAM S. MATHERS, PE
FL # 56698

3-20-13

PROJECT: PINECREST INDUSTRIES OF FLA., INC.
7457 COMMERCIAL CIRCLE
FORT PIERCE, FL 34951

SHEET TITLE: VERONA SERIES
OUTSWING DOUBLE WOOD DOOR
W/ SIDE LITES

DATE 02-25-2013
SCALE AS NOTED
DWN. MM CKD. BY JFV
JOB NO. 826-01
DRAWING NO. PIWC-04-2013

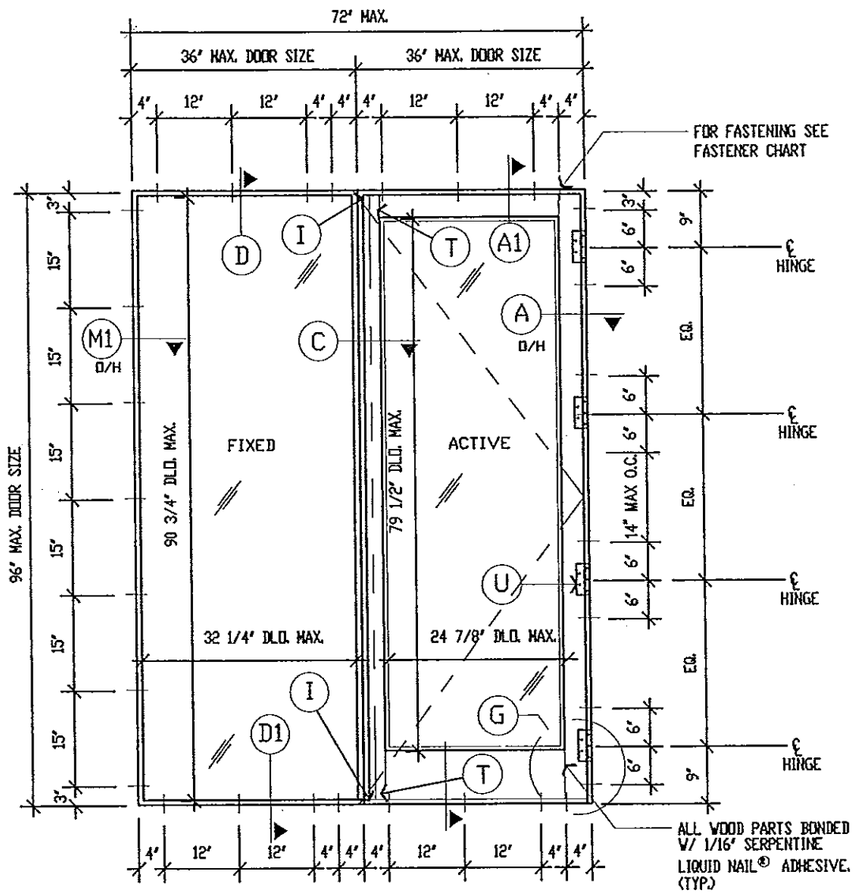

3A VERONA SERIES - OUTSWING SINGLE WOOD DOOR W/1 SIDE LITE

SCALE: 1/2"=1'-0" OX OR XO

NOTES:

1– THIS DOOR SYSTEM IS IMPACT RESISTANT. HURRICANE PROTECTION IS NOT REQUIRED.
2– PROVIDE 1/4" MAXIMUM SHIM SPACE.
3– MATERIAL : MAHOGANY WOOD.
4– GLAZING: SAFETY–PLUS II® LAMINATED GLASS by GLASSLAM N.G.I., INC. (PER CURRENT NOA). 1/2" OVERALL THICKNESS CONSISTING OF: 3/16" ANNEALED GLASS + 0.10" POLYLAM POLYURETHANE LAMINATING POLYMER BY GLASSLAM + 3/16" ANNEALED GLASS.
5– O/H: OPPOSITE HAND.
6– DOOR SYSTEM CAN BE FASTENED TO 2X WOOD BUCKS PER FASTENER SCHEDULE SHOWN IN THIS DRAWING.
7– ATTACHMENT OF 2X WOOD BUCKS TO STRUCTURE SHALL BE DESIGNED BY A LICENSED ARCHITECT OR REGISTERED PROFESSIONAL ENGINEER.
8– ALL 2X WOOD BUCKS PROVIDED BY OTHERS MUST BE VISUALLY GRADED SOUTHERN PINE NO. 3 (STUD). LUMBER SPECIES AND GRADES THAT ARE BETTER OR EQUAL ARE ACCEPTABLE.
9– THIS DOOR SYSTEM HAS BEEN DESIGNED PER 2010 FLORIDA BUILDING CODE.

LOCATION	FASTENER TYPE, SPACING AND QUANTITY FOR VERONA SERIES
DOOR HEADER AND THRESHOLD	USE (9) #14 SHS WOOD SCREW WITH MINIMUN 1 1/2" EMBEDMENT INTO WOOD BUCK OR 1/4" TAPCONS BY 'ELCO' WITH 1-1/2" MIN. EMBEDMENT INTO CONCRETE AND 2 1/2" MINIMUM EDGE DISTANCE.
SIDE LITE HEADER AND SILL	USE (4) #14 SHS WOOD SCREW WITH MINIMUN 1 1/2" EMBEDMENT INTO WOOD BUCK OR 1/4" TAPCONS BY 'ELCO' W/ 1 1/2" EMBEDMENT INTO CONCRETE
JAMBS @ SIDE LITE	USE (7) #14 SHS WOOD SCREW WITH MINIMUN 1 1/2" EMBEDMENT INTO WOOD BUCK
DOOR JAMB	USE (2) #14 SHS WOOD SCREWS AT6" ABOVE AND BELOW EACH HINGE CENTER (TOTAL 8 SCREWS) WITH 1 1/2" MIN. EMBEDMENT INTO WOOD BUCK

ALL ELEVATIONS VIEWED FROM EXTERIOR

DESIGN LOADS (PSF)
+50, -55
IMPACT RESISTANT

PRODUCT REVISED
as complying with the Florida Building Code
Acceptance No. 12-1206.05
Expiration Date 02/27/18
By [signature]
Miami Dade Product Control

MATHERS ENGINEERING CORPORATION
CIVIL STRUCTURAL ARCHITECTURE LAND PLANNING
2431 SE DIXIE HWY
STUART, FL 34996
PHONE: (772) 287-0525
FAX: (772) 220-6686
AA C002028
EB 0004456
WILLIAM S. MATHERS, PE
FL # 58698
3-20-13

PROJECT: PINECREST INDUSTRIES OF FLA., INC.
7457 COMMERCIAL CIRCLE
FORT PIERCE, FL 34951

SHEET TITLE: VERONA SERIES
OUTSWING SINGLE WOOD DOOR
W/ SIDE LITE

DATE 02-25-2013
SCALE AS NOTED
DWN. MM CKD. BY JFV
JOB NO. 826-01
DRAWING NO. PIWC-04-2013

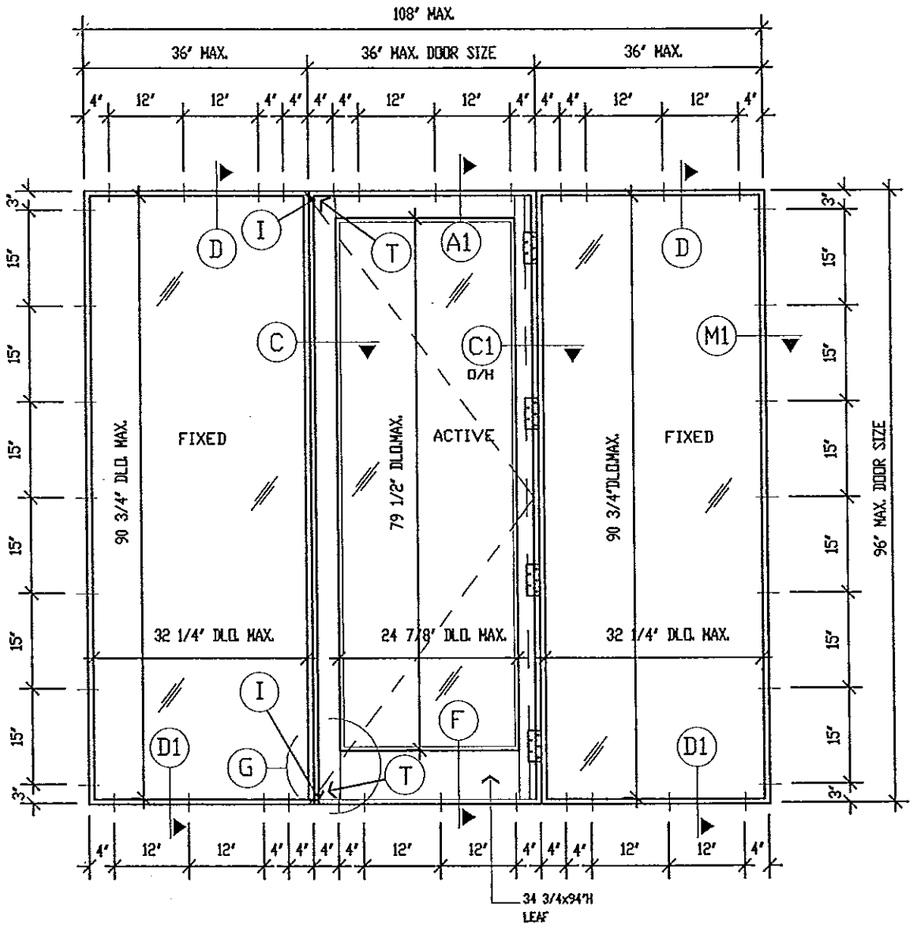

3B VERONA SERIES - OUTSWING SINGLE WOOD DOOR W/2 SIDE LITES

OXO

LOCATION	FASTENER TYPE, SPACING AND QUANTITY FOR VERONA SERIES
DOOR HEADER AND THRESHOLD	USE (4) #14 SMS WOOD SCREW WITH MINIMUN 1 1/2" EMBEDMENT INTO WOOD BUCK OR 1/4" TAPCONS BY 'ELCO' WITH 1-1/2" MIN. EMBEDMENT INTO CONCRETE AND 2 1/2" MINIMUM EDGE DISTANCE.
SIDE LITE HEADER AND SILL	USE (4) #14 SMS WOOD SCREW WITH MINIMUN 1 1/2" EMBEDMENT INTO WOOD BUCK OR 1/4" TAPCONS BY 'ELCO' WITH 1-1/2" MIN. EMBEDMENT INTO CONCRETE
JAMBS & SIDE LITE	USE (7) #14 SMS WOOD SCREW WITH MINIMUN 1 1/2" EMBEDMENT INTO WOOD BUCK

NOTES:

1- THIS DOOR SYSTEM IS IMPACT RESISTANT. HURRICANE PROTECTION IS NOT REQUIRED.
2- PROVIDE 1/4" MAXIMUM SHIM SPACE.
3- MATERIAL : MAHOGANY WOOD.
4- GLAZING: SAFETY-PLUS II® LAMINATED GLASS by GLASSLAM N.G.I., INC. (PER CURRENT NOA). 1/2" OVERALL THICKNESS CONSISTING OF: 3/16" ANNEALED GLASS + 0.10" POLYLAM POLYURETHANE LAMINATING POLYMER BY GLASSLAM + 3/16" ANNEALED GLASS.
5- O/H: OPPOSITE HAND.
6- DOOR SYSTEM CAN BE FASTENED TO 2X WOOD BUCKS PER FASTENER SCHEDULE SHOWN IN THIS DRAWING.
7- ATTACHMENT OF 2X WOOD BUCKS TO STRUCTURE SHALL BE DESIGNED BY A LICENSED ARCHITECT OR REGISTERED PROFESSIONAL ENGINEER.
8- ALL 2X WOOD BUCKS PROVIDED BY OTHERS MUST BE VISUALLY GRADED SOUTHERN PINE NO. 3 (STUD). LUMBER SPECIES AND GRADES THAT ARE BETTER OR EQUAL ARE ACCEPTABLE.
9- THIS DOOR SYSTEM HAS BEEN DESIGNED PER 2010 FLORIDA BUILDING CODE.

ALL ELEVATIONS VIEWED FROM EXTERIOR

DESIGN LOADS (PSF)
+50, -55
IMPACT RESISTANT

PRODUCT REVISED
as complying with the Florida Building Code
Acceptance No 12-1206.05
Expiration Date 02/27/18
By Cheryl Chandler
Miami Dade Product Control

MATHERS ENGINEERING CORPORATION
CIVIL STRUCTURAL ARCHITECTURE LAND PLANNING
2431 SE DIXIE HWY
STUART, FL 34996
PHONE: (772) 287-0525
FAX: (772) 220-8686
AA C002028
EB 0004456
WILLIAM S. MATHERS, PE
FL # 56698
3-20-13

PROJECT: PINECREST INDUSTRIES OF FLA., INC.
7457 COMMERCIAL CIRCLE
FORT PIERCE, FL 34951

SHEET TITLE: VERONA SERIES
OUTSWING SINGLE WOOD DOOR
W/2 SIDE LITES

DATE 02-25-2013
SCALE AS NOTED
DWN. MM CKD. BY JFV
JOB NO. 826-01
DRAWING NO. PIWC-04-2013

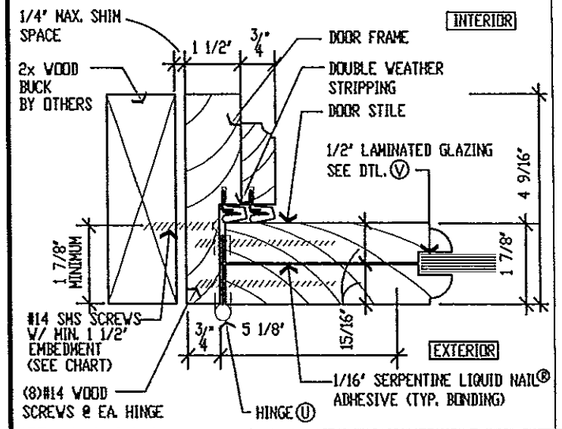

A TYP. DOOR JAMB
SCALE: 3"=1'-0"

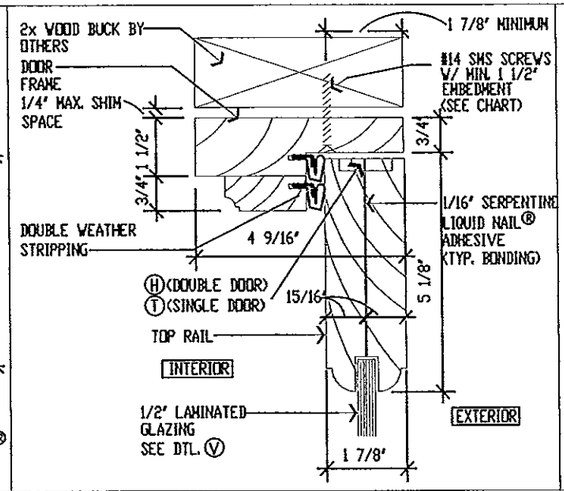

A1 TYP. DOOR HEADER
SCALE: 3"=1'-0"

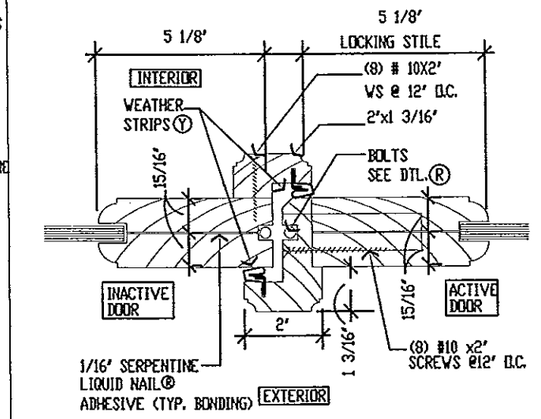

B TYP. ASTRAGAL
SCALE: 3"=1'-0"

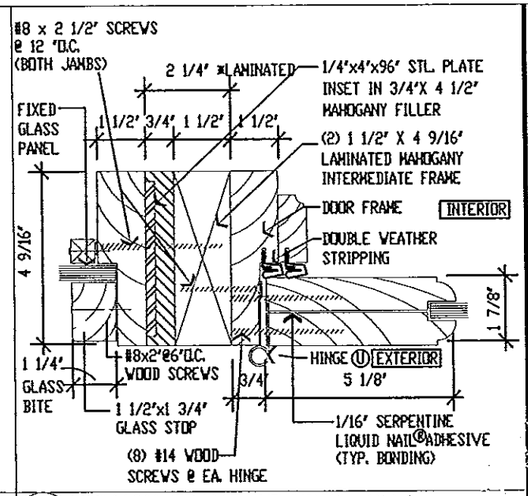

C MULLION FRAME AT HINGE SIDE
SCALE: 3"=1'-0"

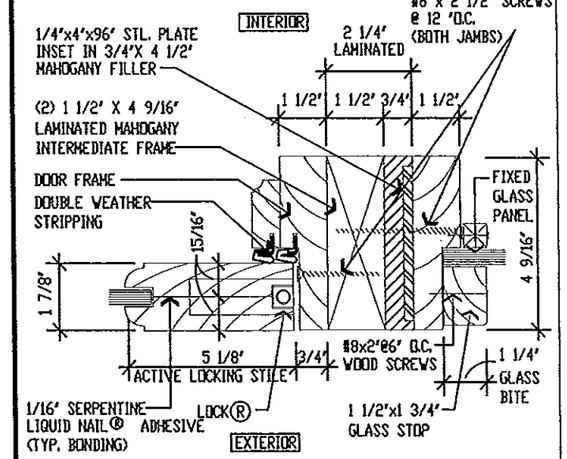

C1 MULLION FRAME AT LOCK SIDE
SCALE: 3"=1'-0"

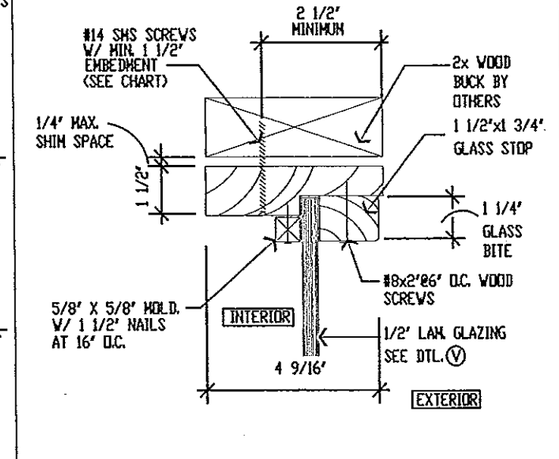

D FIXED PANEL HEAD
SCALE: 3"=1'-0"

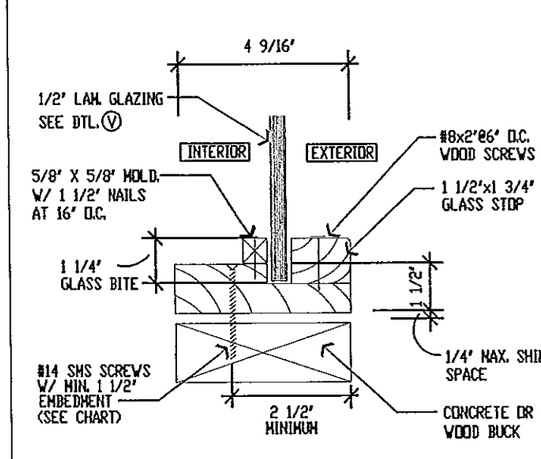

D1 FIXED PANEL SILL
SCALE: 3"=1'-0"

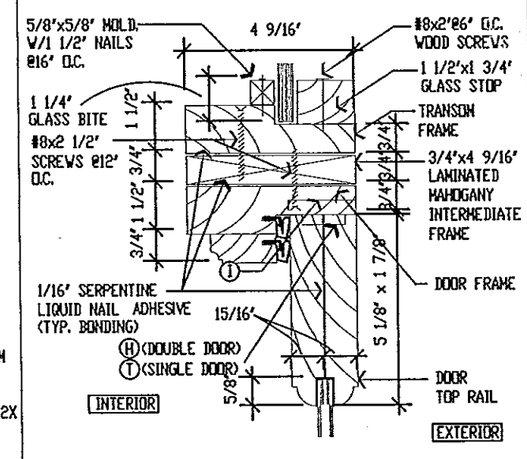

E TRANSOM FRAME
SCALE: 3"=1'-0"

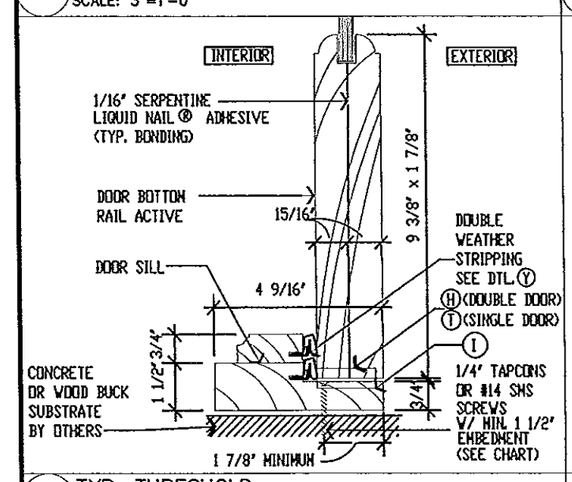

F TYP. THRESHOLD
SCALE: 3"=1'-0"

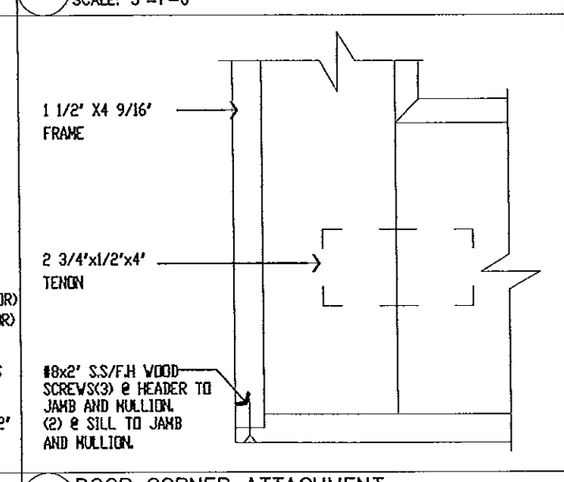

G DOOR CORNER ATTACHMENT
SCALE: 3"=1'-0"

PRODUCT REVISED
as complying with the Florida Building Code
Acceptance No. 12-1206.05
Expiration Date 02/27/2018
By
Miami-Dade Product Control

MATHERS ENGINEERING CORPORATION
CIVIL STRUCTURAL ARCHITECTURE LAND PLANNI
PHONE: (772) 287-0
FAX: (772) 220-81
2481 SE DIXIE HWY
STUART, FL 34996
AA C0002
EB 0004
3-20-13
WILLIAM S. MATHERS, PE
FL # 56698

PROJECT: PINECREST INDUSTRIES OF FLA., INC.
7457 COMMERCIAL CIRCLE
FORT PIERCE, FL 34951

SHEET TITLE: VERONA SERIES
DOOR DETAILS

DATE 02-25-2013
SCALE AS NOTED
DWN. BY MM | CKD. BY JFV
JOB NO. 826-01
DRAWING NO. PIWC-04-2013

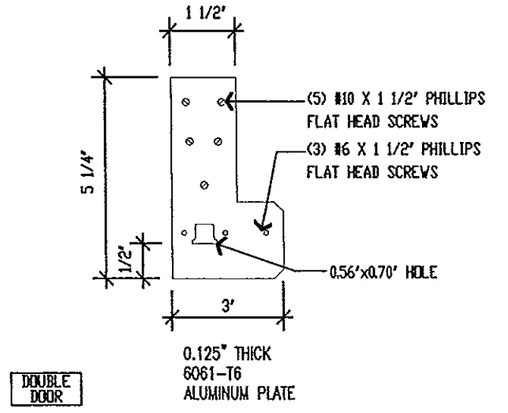

H T-ASTRAGAL TOP / BOTTOM PLATE ACTIVE
SCALE: 3"=1'-0"

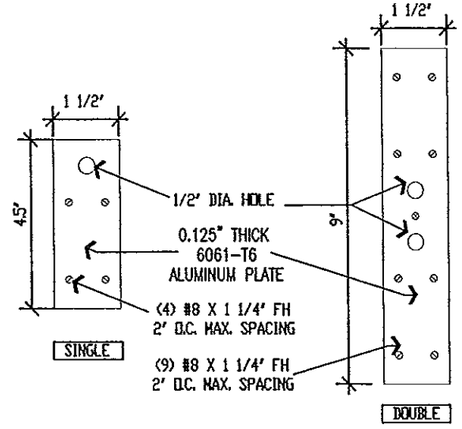

I SILL / HEADER PLATE
SCALE: 3"=1'-0"

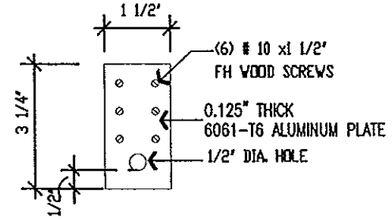

T SINGLE/INACTIVE DOOR TOP/BOTTOM PLATE
SCALE: 3"=1'-0"

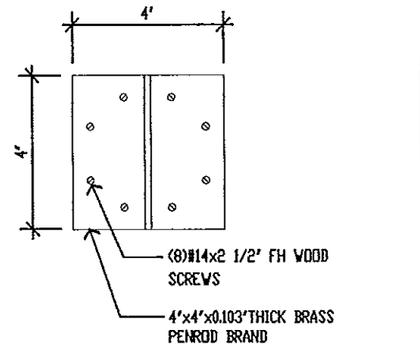

U HINGES (4 PER PANEL)
SCALE: 3"=1'-0"

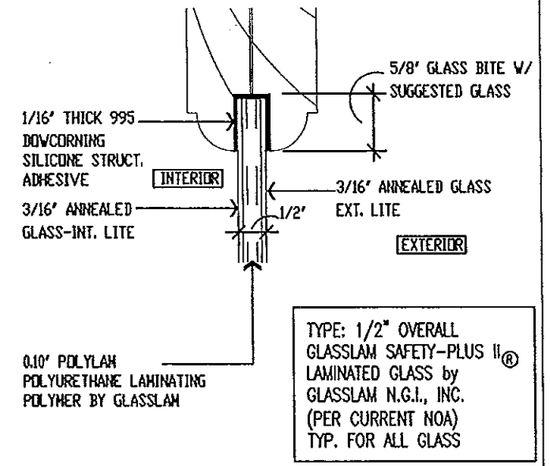

V TYP. GLAZING DETAIL
HALF SCALE

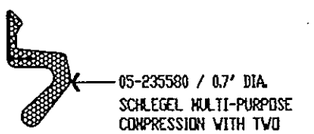

Y TYP. WEATHER STRIP
FULL SCALE

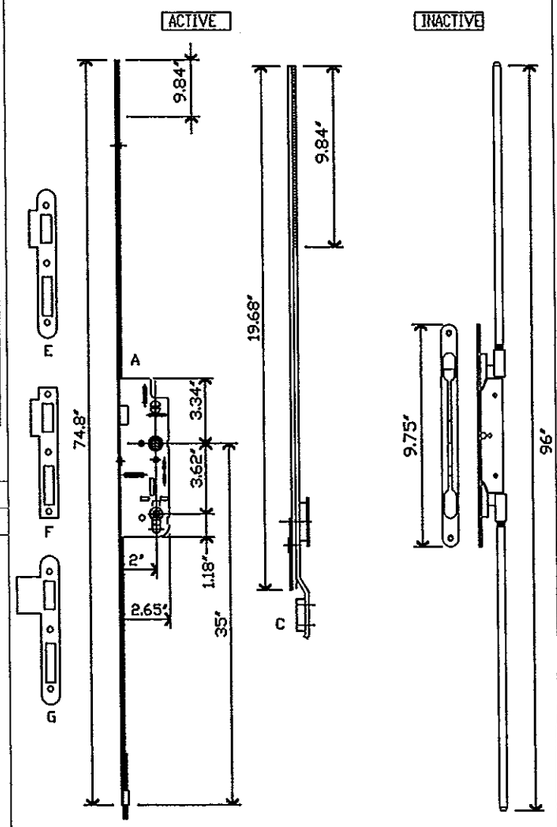

US CRENDNA G.U. HARDWARE 2" G-17567 19-0-3 AT ACTIVE

ASTRAGAL MORTISE LOCK G.U. HARDWARE K-15213-00-0-8 W/ GU1010 SERIES RODS AT INNACTIVE

R MULTIPOINT LOCK
ALL DIMENSIONS IN INCHES

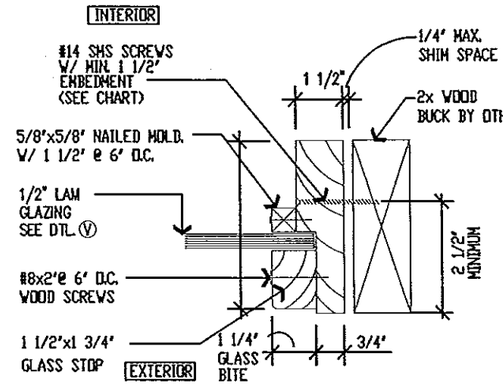

M TRANSOM JAMB
SCALE: 3"=1'-0"

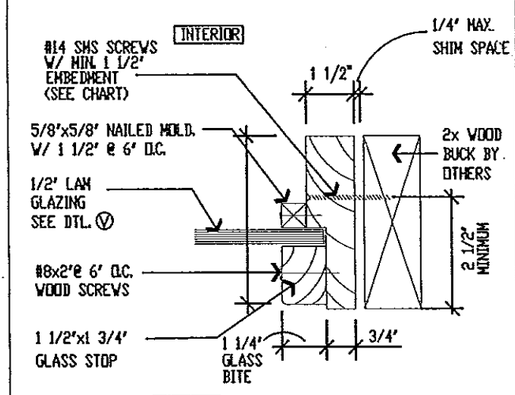

M1 FIXED PANEL JAMB
SCALE: 3"=1'-0"

PRODUCT REVISED
as complying with the Florida
Building Code
Acceptance No. 12-1206.05
Expiration Date Feb 1 2018
By [signature]
Miami-Dade/Broward Certified

PHONE: (772) 287-0525
FAX: (772) 220-8888
AA C002026
EB 0004456
2431 SE DIXIE HWY
STUART, FL 34996
MATHERS ENGINEERING CORPORATION
CIVIL STRUCTURAL ARCHITECTURE LAND PLANNING
2-20-13
WILLIAM S. MATHERS, PE
FL # 56698

PROJECT: PINECREST INDUSTRIES OF FLA., INC.
7457 COMMERCIAL CIRCLE
FORT PIERCE, FL 34951

SHEET TITLE: VERONA SERIES
DOOR DETAILS

DATE 02-25-2013
SCALE AS NOTED
DWN. BY MM | CKD. BY JFV
JOB NO. 826-01
DRAWING NO. PIWC-04-2013
14 OF 14