MIAMI-DADE COUNTY
DEPARTMENT OF REGULATORY AND ECONOMIC RESOURCES (RER)
BOARD AND CODE ADMINISTRATION DIVISION

MIAMI–DADE COUNTY, FLORIDA
PRODUCT CONTROL SECTION
11805 SW 26 Street, Room 208
T (786) 315–2590 F (786) 315–2599
www.miamidade.gov/economy

NOTICE OF ACCEPTANCE (NOA)

Titan Glass & Aluminum, LLC
450 West 27 Street
Hialeah, FL 33010

SCOPE:

This NOA is being issued under the applicable rules and regulations governing the use of construction materials. The documentation submitted has been reviewed and accepted by Miami–Dade County RER–Product Control Section to be used in Miami–Dade County and other areas where allowed by the Authority Having Jurisdiction (AHJ).

This NOA shall not be valid after the expiration date stated below. The Miami–Dade County Product Control Section (In Miami–Dade County) and/or the AHJ (in areas other than Miami–Dade County) reserve the right to have this product or material tested for quality assurance purposes. If this product or material fails to perform in the accepted manner, the manufacturer will incur the expense of such testing and the AHJ may immediately revoke, modify, or suspend the use of such product or material within their jurisdiction. RER reserves the right to revoke this acceptance, if it is determined by Miami–Dade County Product Control Section that this product or material fails to meet the requirements of the applicable building code.

This product is approved as described herein, and has been designed to comply with the Florida Building Code, including the High Velocity Hurricane Zone.

DESCRIPTION: Series "TSD–5000" Aluminum Sliding Glass Door – Dry–Glazed – L.M.I.

APPROVAL DOCUMENT: Drawing No. **W12–60**, titled "Series TSD–5000 Alum. Sliding Glass Door (L.M.I.)", sheets 01 through 08 of 08, dated 11/21/12 with revision "**A**" dated 02/28/13, prepared by Al–Farooq Corporation, signed and sealed by Javad Ahmad, P. E., bearing the Miami–Dade County Product Control Section Approval stamp with the Notice of Acceptance number and Approval date by the Miami–Dade County Product Control Section.

MISSILE IMPACT RATING: Large and Small Missile Impact Resistant

LABELING: Each unit shall bear a permanent label with the manufacturer's name or logo, city, state, model/series, and following statement: "Miami–Dade County Product Control Approved", unless otherwise noted herein.

RENEWAL of this NOA shall be considered after a renewal application has been filed and there has been no change in the applicable building code negatively affecting the performance of this product.

TERMINATION of this NOA will occur after the expiration date or if there has been a revision or change in the materials, use, and/or manufacture of the product or process. Misuse of this NOA as an endorsement of any product, for sales, advertising or any other purposes shall automatically terminate this NOA. Failure to comply with any section of this NOA shall be cause for termination and removal of NOA.

ADVERTISEMENT: The NOA number preceded by the words Miami–Dade County, Florida, and followed by the expiration date may be displayed in advertising literature. If any portion of the NOA is displayed, then it shall be done in its entirety.

INSPECTION: A copy of this entire NOA shall be provided to the user by the manufacturer or its distributors and shall be available for inspection at the job site at the request of the Building Official.

This NOA consists of this page 1 and evidence pages E–1 and E–2, as well as approval document mentioned above.

The submitted documentation was reviewed by **Jaime D. Gascon, P. E.**

MIAMI-DADE COUNTY APPROVED

J. Gascon
3/11/13

Titan Glass & Aluminum, LLC

NOTICE OF ACCEPTANCE: EVIDENCE SUBMITTED

A. DRAWINGS

1. Manufacturer's die drawings and sections.
2. Drawing No. **W12–60**, titled "Series TSD–5000 Alum. Sliding Glass Door (L.M.I.)", sheets 01 through 08 of 08, dated 11/21/12 with revision "**A**" dated 02/28/13, prepared by Al–Farooq Corporation, signed and sealed by Javad Ahmad, P. E.

B. TESTS

1. Test reports on: 1) Air Infiltration Test, per FBC, TAS 202–94
   2) Uniform Static Air Pressure Test, Loading per FBC, TAS 202–94
   3) Water Resistance Test, per FBC, TAS 202–94
   4) Forced Entry Test, per FBC 2411.3.2.1, and TAS 202–94

   along with marked–up drawings and installation diagram of sliding door, prepared by Hurricane Engineering Testing, Inc., Test Report No. **HETI–12–4066**, dated 11/14/12, signed and sealed by Rafael E. Droz–Seda, P. E.
2. Test reports on: 1) Large Missile Impact Test per FBC, TAS 201–94
   2) Cyclic Wind Pressure Loading per FBC, TAS 203–94

   along with marked–up drawings and installation diagram of sliding door, prepared by Hurricane Engineering Testing, Inc., Test Reports No.'s **HETI–12–4067** and **HETI–12–4069**, both dated 11/14/12, signed and sealed by Rafael E. Droz–Seda, P.E.

C. CALCULATIONS

1. Anchor verification calculations and structural analysis, complying with **FBC–2010**, prepared by Al–Farooq Corporation, dated 12/04/12, signed and sealed by Javad Ahmad, P. E.
2. **Glazing complies with ASTM E1300–04 and with DCA05–DEC–219 Florida Building Commission Declaratory Statement**

D. QUALITY ASSURANCE

1. Miami–Dade Department of Regulatory and Economic Resources (RER).

E. MATERIAL CERTIFICATIONS

1. Notice of Acceptance No. **11–0624.02** issued to **E.I. DuPont DeNemours & Co.**, Inc. for their "**DuPont SentryGlas® Interlayer**" dated 08/25/11, expiring on 01/14/17.

F. STATEMENTS

1. Statement letter of no financial interest, conformance and complying with **FBC–2010**, issued by Al–Farooq Corporation, dated 11/28/12, signed and sealed by Javad Ahmad, P. E.

Jaime D. Gascon, P. E.
Product Control Section Supervisor
NOA No. 12–1213.02
Expiration Date: March 14, 2018
Approval Date: March 14, 2013

F. STATEMENTS (CONTINUED)

2. Laboratory compliance letters for Test Reports No.'s **HETI–12–4066**, **HETI–12–4067** and **HETI–12–4069**, issued by Hurricane Engineering Testing, Inc., all dated 11/14/12, signed and sealed by Rafael E. Droz–Seda, P. E.

3. Proposal issued by Product Control, dated 08/09/12, signed by Jaime D. Gascon, P. E.

G. OTHERS

1. None.

Jaime D. Gascon, P. E.
Product Control Section Supervisor
NOA No. 12–1213.02
Expiration Date: March 14, 2018
Approval Date: March 14, 2013

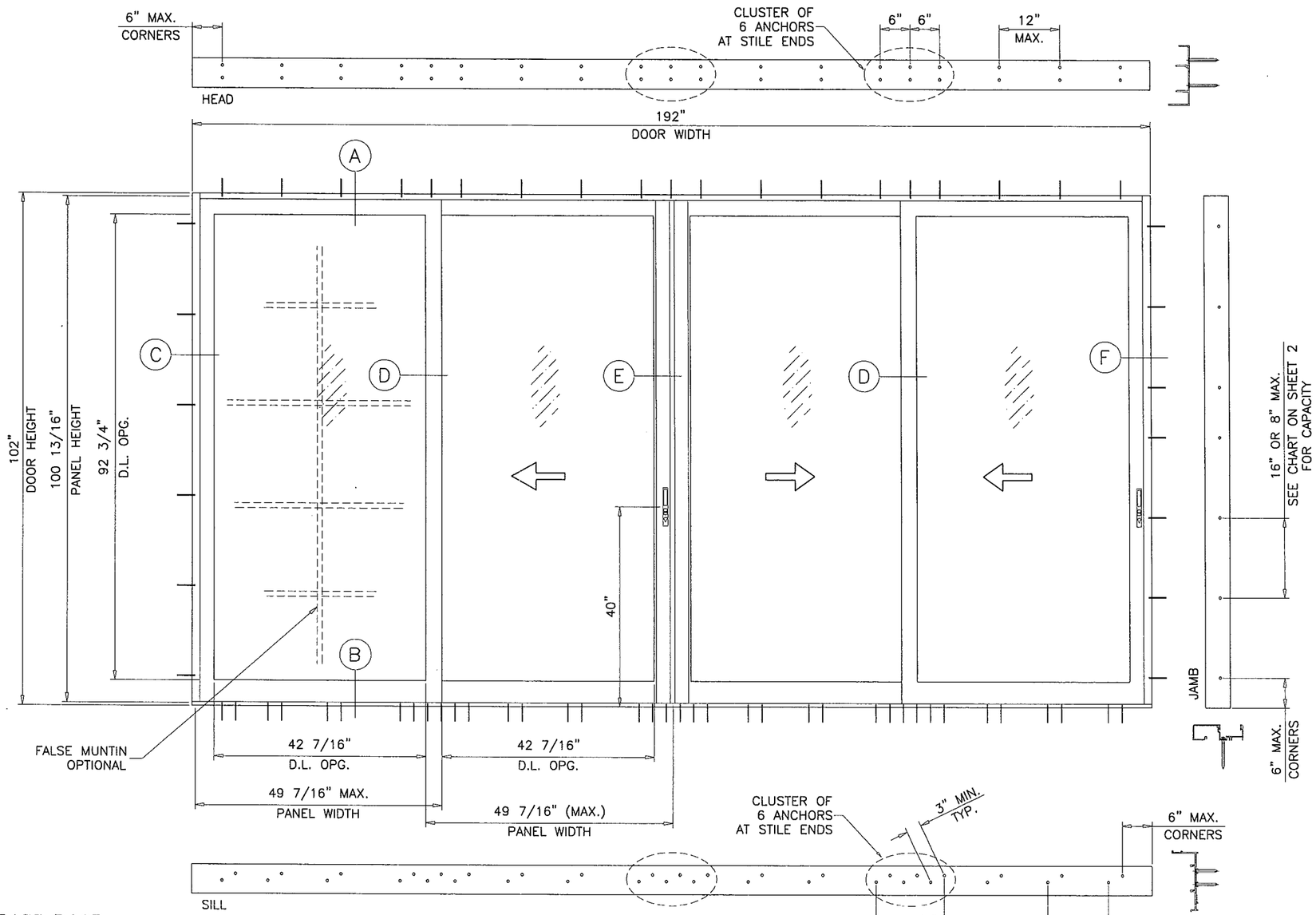

TYPICAL ELEVATION

OXXX

Approved as complying with the
Florida Building Code
Date 03/27/2013
NOA# 12-1213.02
Miami-Dade Product Control
By

SERIES 'TSD-5000' ALUMINUM SLIDING GLASS DOOR

DESIGN LOAD RATING FOR DOORS TO BE AS PER CHART SHOWN ON SHEET 2.

THIS PRODUCT HAS BEEN DESIGNED AND TESTED TO COMPLY WITH THE REQUIREMENTS OF THE FLORIDA BUILDING CODE INCLUDING HIGH VELOCITY HURRICANE ZONE (HVHZ).

WOOD BUCKS BY OTHERS, MUST BE ANCHORED PROPERLY TO TRANSFER LOADS TO THE STRUCTURE.

ANCHORS SHALL BE AS LISTED, SPACED AS SHOWN ON DETAILS, ANCHORS EMBEDMENT TO BASE MATERIAL SHALL BE BEYOND WALL DRESSING OR STUCCO.

ANCHORING OR LOADING CONDITIONS NOT SHOWN IN THESE DETAILS ARE NOT PART OF THIS APPROVAL.

A LOAD DURATION INCREASE IS USED IN DESIGN OF ANCHORS INTO WOOD ONLY.

MATERIALS INCLUDING BUT NOT LIMITED TO STEEL/METAL SCREWS, THAT COME INTO CONTACT WITH OTHER DISSIMILAR MATERIALS SHALL MEET THE REQUIREMENTS OF THE FLORIDA BLDG. CODE SECTION 2003.8.4.

DAYLITE OPENINGS:
D.L.O. HEIGHT = PANEL HEIGHT – 8.062"
D.L.O. WIDTH = PANEL WIDTH – 7" (TYP. PANEL)
D.L.O. WIDTH = PANEL WIDTH – 8.250" (PANEL W/ FEMALE ASTRAGAL)
PANEL HEIGHT = DOOR HEIGHT – 1.187"

THESE DOORS ARE RATED FOR LARGE & SMALL MISSILE IMPACT. SHUTTERS ARE NOT REQUIRED.

Engr: JAVAD AHMAD
CIVIL
FLA. PE # 70592
C.A.N. 3538

MAR 04 2013

LAMINATED GLASS
LARGE MISSILE IMPACT

AL-FAROOQ CORPORATION
ENGINEERS & PRODUCT DEVELOPMENT
1235 S.W. 87 AVE
MIAMI, FLORIDA 33174
TEL. (305) 264-8100 FAX. (305) 262-6978
COMP-ANL\W12-60TGA

SERIES 'TSD-5000' ALUM SLIDING GLASS DOOR (L.M.I.)

TITAN GLASS & ALUMINUM, LLC.
450 WEST 27 STREET
HIALEAH, FL. 33010
TEL. (305) 888-0911 FAX. (305) 671-3840

revisions:			
no	date	by	description
A	02.28.13		REV. PER RER COMMENTS

date: 11-21-12
scale: 1/2"=1'-0"
dr. by: HAMID
chk. by:

drawing no.
W12-60

DESIGN LOAD CAPACITY - PSF			
AVERAGE PANEL WIDTH INCHES	DOOR HEIGHT INCHES	9/16" LAM. GLASS	
		EXT.(+)	INT.(-)
36	80	80.0	125.0
42		80.0	125.0
48		80.0	125.0
54		71.1	111.1
60		64.0	100.0
36	96	80.0	125.0
42		80.0	125.0
48		80.0	125.0
36	102	80.0	125.0
42		80.0	125.0
48		80.0	122.3

$$\text{AVERAGE PANEL WIDTH} = \frac{\text{DOOR WIDTH}}{\text{NUMBER OF PANELS}}$$

MAX. DOOR WIDTHS.
FOR 2 PANELS = 120 IN.
FOR 3 PANELS = 180 IN.
FOR 4 PANELS = 192 IN.
(MAY BE FURTHER LIMITED BY CHART AT LEFT)

ALL EXTERIOR(+) LOADS SHOWN IN CHARTS ABOVE ARE FOR DOORS WITH 4" SILL HEIGHTS.
FOR 2-5/8" SILL HEIGHT LIMIT EXT.(+) LOADS TO 60.0 PSF
SEE SHEET 5 FOR DETAILS

DOOR HEIGHT AND WIDTH SIZE MUST COMPLY EGRESS REQUIREMENTS PER FBC AS NEEDED.

JAMB ANCHORS CAPACITY					
PANEL WIDTH INCHES	ANCHORS 'A'		ANCHORS 'B'		ANCHORS 'C'
	16" O.C.	8" O.C.	16" O.C.	8" O.C.	16" O.C.
36	118.0	125.0	125.0	125.0	125.0
42	101.1	125.0	125.0	125.0	125.0
48	88.5	125.0	110.6	125.0	125.0
54	78.6	111.0	98.3	111.0	111.0
60	70.8	100.0	88.5	100.0	100.0

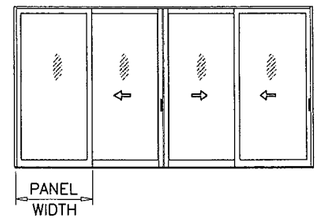

NOTE:
SEE CHART AT LEFT FOR DESIGN LOAD CAPACITY OF DESIRED GLASS SIZE.
SEE CHART ABOVE FOR JAMB ANCHORS CAPACITY.
LOWER DESIGN PRESSURES FROM GLASS OR JAMB ANCHOR CHARTS WILL APPLY TO ENTIRE SYSTEM.

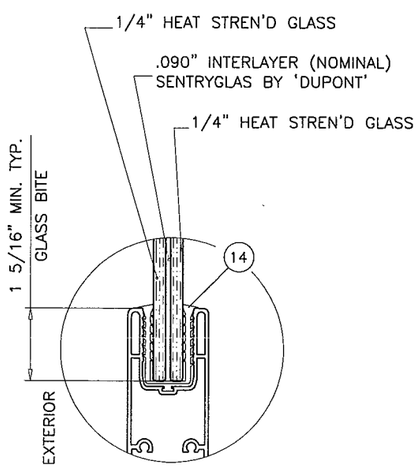

GLAZING DETAIL
9/16" OVERALL LAMINATED GLASS

NOTE:
GLASS CAPACITIES ON THIS SHEET ARE BASED ON ASTM E1300-04 (3 SEC. GUSTS) AND FLORIDA BUILDING COMMISSION DECLARATORY STATEMENT DCA05-DEC-219

Approved as complying with the Florida Building Code
Date 03/14/2013
NOA# 12-1213.02
Miami-Dade Product Control
By

Engr: JAVAD AHMAD
CIVIL
FLA. PE # 70592
C.A.N. 3538

MAR 04 2013

AL-FAROOQ CORPORATION
ENGINEERS & PRODUCT DEVELOPMENT
1235 S.W. 87 AVE
MIAMI, FLORIDA 33174
TEL. (305) 264-8100 FAX. (305) 262-6978

COMP-ANL\W12-60TGA

SERIES 'TSD-5000' ALUM SLIDING GLASS DOOR (L.M.I.)

TITAN GLASS & ALUMINUM, LLC.
450 WEST 27 STREET
HIALEAH, FL. 33010
TEL. (305) 888-0911 FAX. (305) 671-3840

revisions:

no	date	by	description
A	02.28.13		NO CHANGE THIS SHEET

date: 11-21-12
scale: 3/8" = 1"
dr. by: HAMID
chk. by:

drawing no.
W12-60

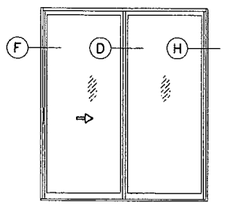

XO (SHOWN)
OX

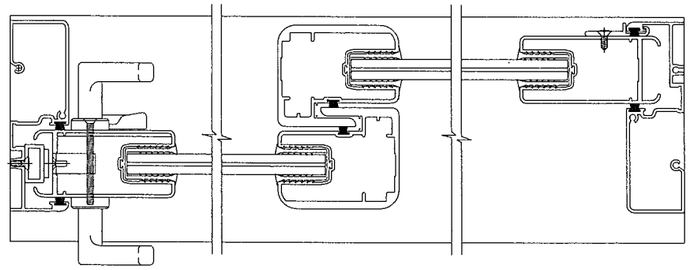

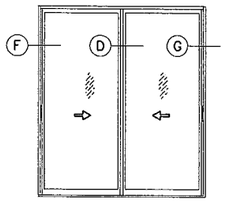

XX (SHOWN)

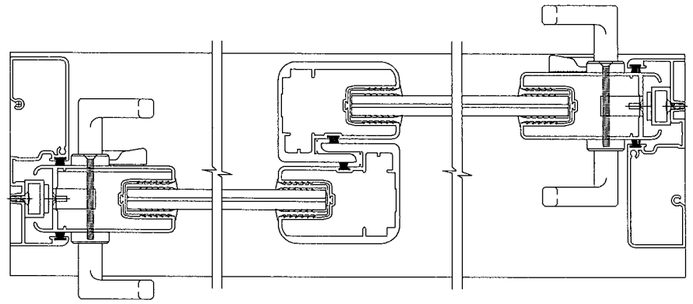

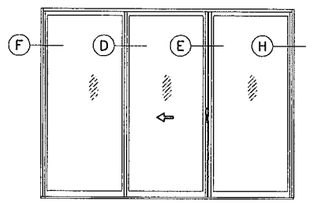

OXO (SHOWN)
OXO

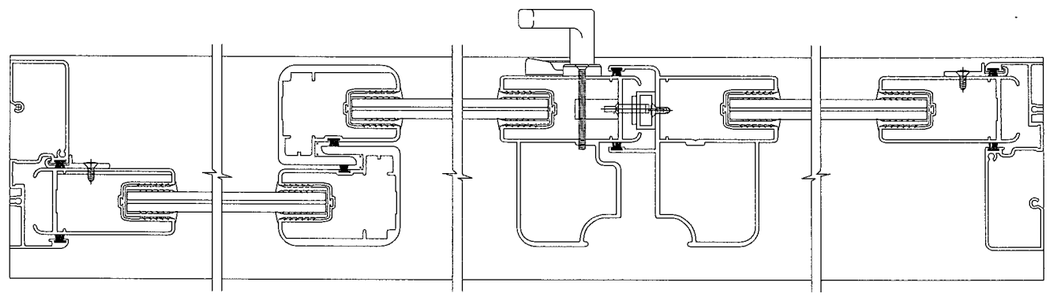

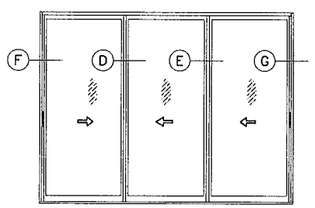

XXX (SHOWN)

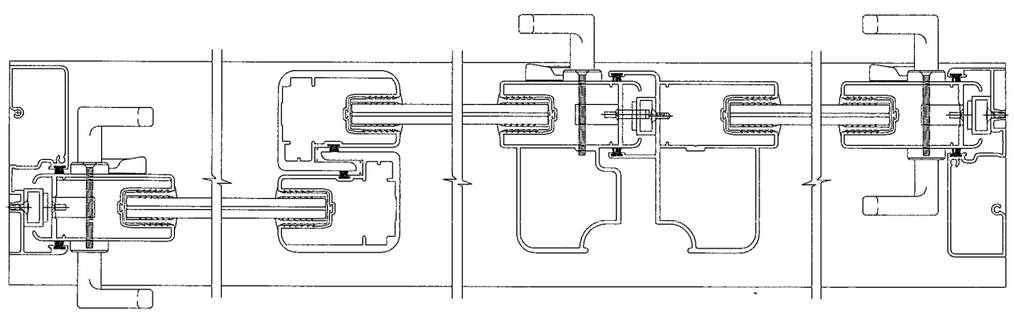

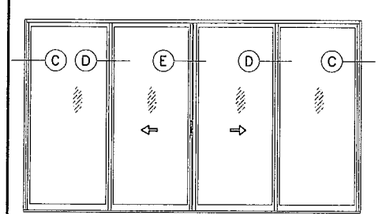

OXXO (SHOWN)
OXXX

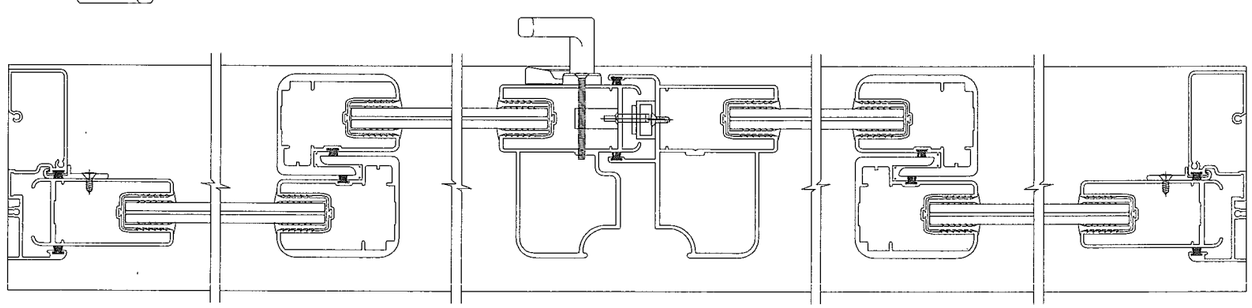

APPROVED CONFIGURATIONS

NOTE:
CONFIGURATIONS SHOWN FOR ILLUSTRATION PURPOSE ONLY
(SEE APPLICABLE ANCHOR INSTALLATIONS ON SHEET 6)

Approved as complying with the
Florida Building Code
Date 03/14/2013
NOA# 12-1213.02
Miami Dade Product Control
By

Engr: JAVAD AHMAD
CIVIL
FLA. PE # 70592
C.A.N. 3538

MAR 0 4 2013

AL-FAROOQ CORPORATION
ENGINEERS & PRODUCT DEVELOPMENT
1235 S.W. 87 AVE
MIAMI, FLORIDA 33174
TEL. (305) 264-8100 FAX. (305) 262-6978

COMP-ANL\W12-60TGA

SERIES 'TSD-5000' ALUM SLIDING GLASS DOOR (L.M.I.)

TITAN GLASS & ALUMINUM, LLC.
450 WEST 27 STREET
HIALEAH, FL. 33010
TEL. (305) 888-0911 FAX. (305) 671-3840

revisions:

no	date	by	description
A	02.28.13		NO CHANGE THIS SHEET

date: 11-21-12
scale: -
dr. by: HAMID
chk. by:

drawing no.
W12-60

1BY OR 2BY WOOD BUCKS AND METAL STRUCTURE NOT BY TITAN GLASS MUST SUSTAIN LOADS IMPOSED BY GLAZING SYSTEM AND TRANSFER THEM TO THE BUILDING STRUCTURE.

TYPICAL ANCHORS: SEE ELEV. FOR SPACING

— AT HEAD —

TYPE 'A'– 1/4" DIA. ULTRACON BY 'ELCO' (Fu=177 KSI, Fy=155 KSI)
INTO 2BY WOOD BUCKS OR WOOD STRUCTURES
1–1/2" MIN. PENETRATION INTO WOOD

THRU 1BY BUCKS INTO CONCRETE
1–1/4" MIN. EMBED INTO CONCRETE

TYPE 'B'– 1/4" DIA. ULTRACON BY 'ELCO' (Fu=177 KSI, Fy=155 KSI)
DIRECTLY INTO CONCRETE
1–1/2" MIN. EMBED

TYPE 'C'– #14 SMS OR SELF DRILLING SCREWS (GRADE 2 CRS)
INTO MIAMI–DADE COUNTY APPROVED MULLIONS (1/8" THK. MIN.)
INTO METAL STRUCTURES
STEEL : 1/8" THK. MIN. (Fy = 36 KSI MIN.)
ALUMINUM : 1/8" THK. MIN. (6063–T5 MIN.)
(STEEL IN CONTACT WITH ALUMINUM TO BE PLATED OR PAINTED)

— AT SILL —

TYPE 'B'– 1/4" DIA. ULTRACON BY 'ELCO' (Fu=177 KSI, Fy=155 KSI)
DIRECTLY INTO CONCRETE
1–1/2" MIN. EMBED

— AT JAMBS —

TYPE 'A'– 1/4" DIA. ULTRACON BY 'ELCO' (Fu=177 KSI, Fy=155 KSI)
INTO 2BY WOOD BUCKS OR WOOD STRUCTURES
1–1/2" MIN. PENETRATION INTO WOOD

THRU 1BY BUCKS INTO CONC. OR MASONRY
1–1/4" MIN. EMBED INTO CONC. OR MASONRY

TYPE 'B'– 1/4" DIA. ULTRACON BY 'ELCO' (Fu=177 KSI, Fy=155 KSI)
DIRECTLY INTO CONC. OR MASONRY
1–1/4" MIN. EMBED INTO CONC. OR MASONRY

TYPE 'C'– #14 SMS OR SELF DRILLING SCREWS (GRADE 5 CRS)
INTO MIAMI–DADE COUNTY APPROVED MULLIONS (1/8" THK. MIN.)
INTO METAL STRUCTURES
STEEL : 1/8" THK. MIN. (Fy = 36 KSI MIN.)
ALUMINUM : 1/8" THK. MIN. (6063–T5 MIN.)
(STEEL IN CONTACT WITH ALUMINUM TO BE PLATED OR PAINTED)

ANCHOR EDGE DISTANCES
INTO CONCRETE = 2–1/2" MIN.
INTO WOOD STRUCTURE = 1" MIN.
INTO METAL STRUCTURE = 3/4" MIN.

CONCRETE AT HEAD, SILL OR JAMBS f'c = 3000 PSI MIN.
C–90 HOLLOW/FILLED BLOCK AT JAMBS f'm = 2000 PSI MIN.

ITEM #	PART #	QUANTITY	DESCRIPTION	MATERIAL	MANF./SUPPLIER/REMARKS
1	TGA101	1	FRAME HEAD	6005–T5	–
2	TGA128	1	FRAME SILL	6005–T5	–
3	TGA129	AS RQD.	SILL RISER	6063–T6	–
4	TGA103	2	FRAME JAMB	6063–T6	–
5	TGA110	AS RQD.	RETAINING CLIP	6005–T5	@ MTG. STILES HEAD & SILL ENDS
6	TGA140	1/PANEL	PANEL TOP RAIL	6063–T6	–
7	TGA141	1/PANEL	PANEL BOTTOM RAIL	6063–T6	–
8	TGA143	AS REQD.	PANEL LOCK STILE	6063–T6	
9	TGA142	AS REQD.	PANEL INTERLOCK STILE	6063–T6	–
10	TGA145	AS REQD.	PANEL FEMALE ASTRAGAL	6063–T6	
11	TGA144	AS REQD.	PANEL MALE ASTRAGAL	6063–T6	
12	TGA112	2	JAMB FASTENER COVER	6063–T5	OPTIONAL (NOT SHOWN)
13	TGA146	3/FIX.PANEL	FIXED PANEL RETAINING CLIP	6063–T5	SECURE W/1 #10 FHSMS
14	TGA147	AS RQD.	GLAZING GASKET	SANTOPRENE	–
15	TGA125	2/ PANEL	PANEL TOP GUIDE, (.62" X 1.40" X .370")	NYLON	–
16	TGA148	2/ FIX. PANEL	FIXED PANEL BOTTOM GUIDE, (3" X .91" X .70")	NYLON	–
17		2/GUIDE	BOTTOM GUIDE INST. SCREWS	–	#10 x 3/4" FHSMS
18		AS REQD.	FRAME & PANEL ASSY. SCREWS	–	#10 x 1" PHSMS
19		2/CLIP	RETAINING CLIP SCREWS	–	#10 x 1/2 FHSMS
20	2815 MULTI POINT	1/MOV. PANEL	MORTISE LOCK – MULTI POINT	–	AMESBURY
22		2/LOCK	LOCK INSTALLATION SCREWS	–	#6–32 x 1/2" FHSMS
23	2470 MULTI POINT	1/LOCK	LOCK KEEPER	–	–
24	1/2" X 1" X .093	1/LOCK	LOCK KEEPER – CUSTOM FILLER TUBE	6063–T5	–
25		2/KEEPER	KEEPER MOUNTING SCREWS STD.	–	#10 x 1/2" PHSMS
26		2/KEEPER	KEEPER MOUNTING SCREWS MULTI PT.	–	#10 x 3/4" PHSMS
27	APOLLO BY AMESBURY	1/LOCK	INTERIOR & EXTERIOR PULL	–	@ STD. LOCK STILE
28	APOLLO BY AMESBURY	2/MOV. PANEL	INTERIOR PULL	–	@ MALE ASTRAGAL STILE
29	TA–88	2/MOV. PANEL	PANEL ROLLER ASSY.	–	AMESBURY
30		2/ROLLER	ROLLER INSTALLATION SCREWS	–	#8 x 1/2 FHSMS
31	W21405NK	AS RQD.	TOP RAIL W/STRIP AT INTERLOCKS	–	FIN SEAL BY ULTRAFAB
32	W21305NK	AS RQD.	VERTICAL W/STRIP AT JAMBS & ASTRAGAL	–	FIN SEAL BY ULTRAFAB
33	Q267075K	AS RQD.	BOTT. RAIL W/STRIP SQUARE BACK	–	FIN SEAL SKIRTING BY ULTRAFAB
34		1/MOV. PANEL	3 1/4" X 5/8" X 1/2" HIGH, ADHESIVE BACK PAD	–	SILL/INTERLOCK LOCATION
35		1/MOV. PANEL	3 1/4" X 1 3/16" X 1/2" HIGH, ADHESIVE BACK PAD	–	SILL/INTERLOCK LOCATION
36		1/MOV. PANEL	3 1/4" X 1" X 1/2" HIGH, ADHESIVE BACK PAD	–	HEAD/INTERLOCK/ASTRAGAL LOCATION
37		1/MOV. PANEL	3 1/4" X 2 3/16" X 1/2" HIGH, ADHESIVE BACK PAD	–	HEAD/INTERLOCK/ASTRAGAL LOCATION

Approved as complying with the Florida Building Code
Date 03/14/2013
NOA# 12-1213.02
Miami-Dade Product Control
By

Engr: JAVAD AHMAD
CIVIL
FLA. PE # 70592
C.A.N. 3538

MAR 04 2013

AL-FAROOQ CORPORATION
ENGINEERS & PROJECT DEVELOPMENT
1235 S.W. 87 AVE
MIAMI, FLORIDA 33174
TEL. (305) 264-8100 FAX. (305) 262-6978

COMP–ANL\W12–60TGA

SERIES 'TSD–5000' ALUM SLIDING GLASS DOOR (L.M.I.)

TITAN GLASS & ALUMINUM, LLC.
450 WEST 27 STREET
HIALEAH, FL. 33010
TEL. (305) 888–0911 FAX. (305) 671–3840

revisions:

no	date	by	description
A	02.28.13		REV. PER RER COMMENTS

date: 11–21–12
scale: –
dr. by: HAMID
chk. by:

drawing no. W12–60

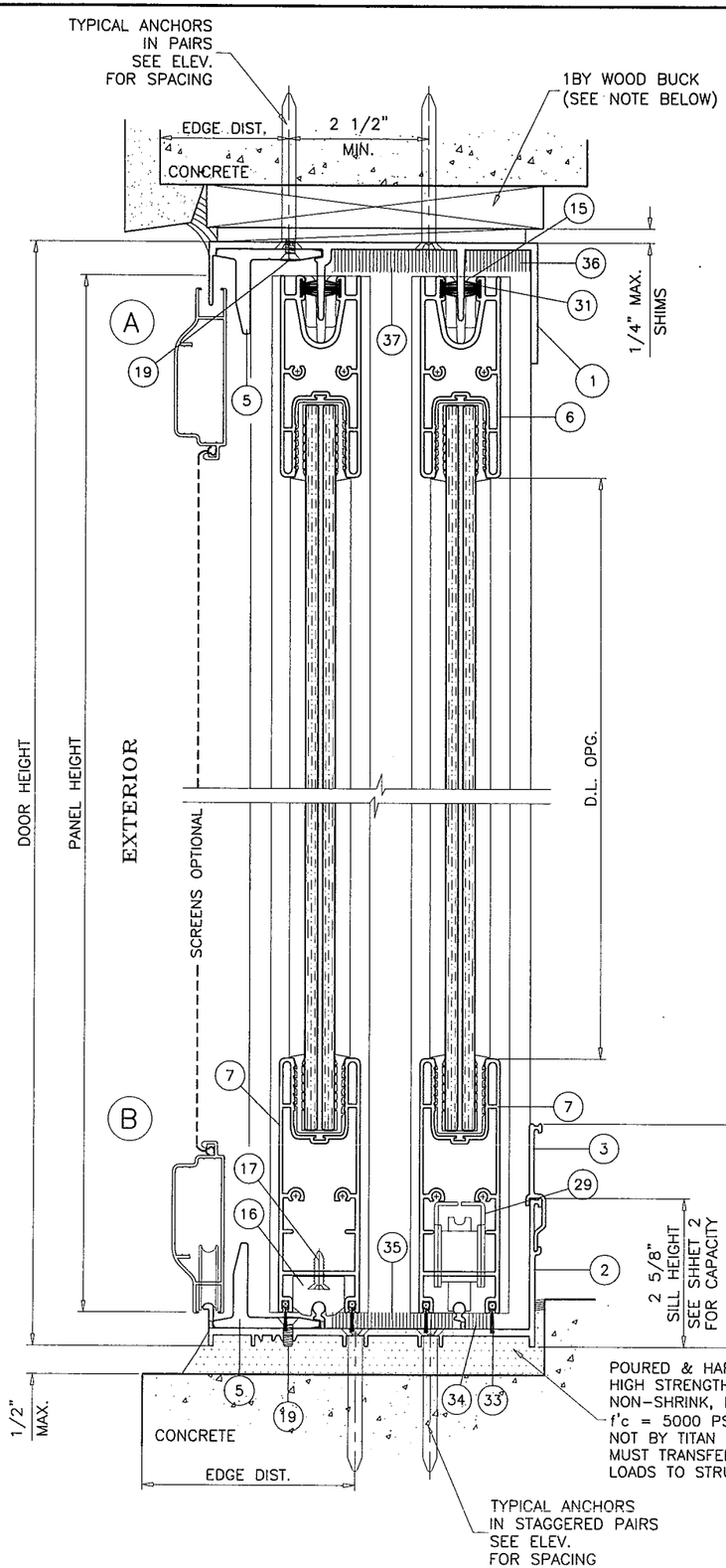

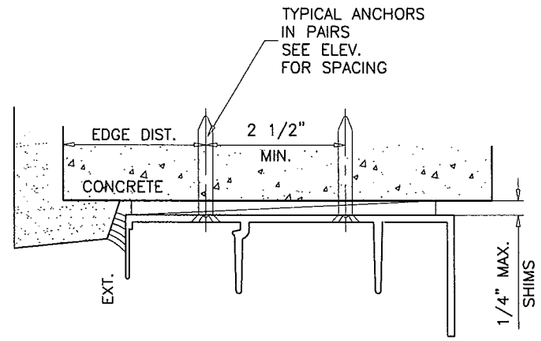

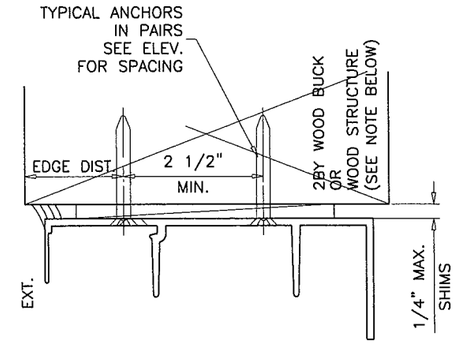

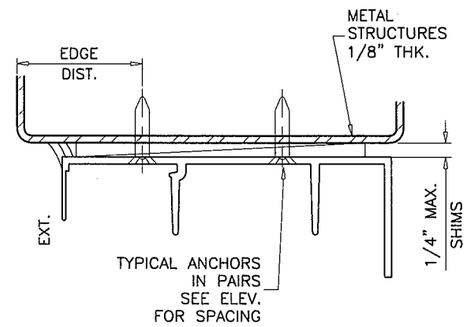

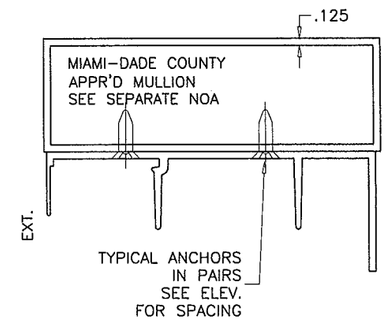

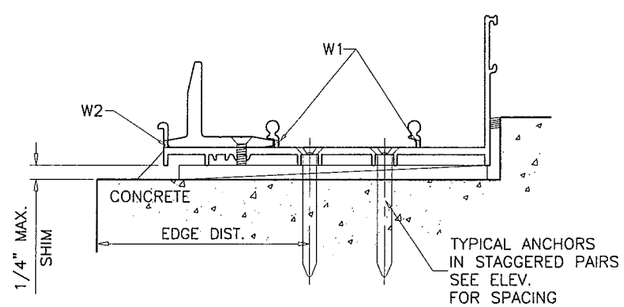

Approved as complying with the Florida Building Code
Date 03/14/2013
NOA# 12-1213.82
Miami-Dade Product Control
By

WEEPS:

W1 = 1-3/4" X 1/8" WEEP SLOTS AT MID OF CENTER PANELS
W2 = 3-1/4" X 1/8" WEEP SLOTS AT 2" FROM EACH END AND AT MID OF CENTER PANELS

Engr: JAVAD AHMAD
CIVIL
FLA. PE # 70592
C.A.N. 3538

MAR 0 4 2013

AL-FAROOQ CORPORATION
ENGINEERS & PRODUCT DEVELOPMENT
1235 S.W. 87 AVE
MIAMI, FLORIDA 33174
TEL. (305) 264-8100 FAX. (305) 262-6978
COMP-ANL\W12-60TGA

SERIES 'TSD-5000' ALUM SLIDING GLASS DOOR (L.M.I.)

TITAN GLASS & ALUMINUM, LLC.
450 WEST 27 STREET
HIALEAH, FL. 33010
TEL. (305) 888-0911 FAX. (305) 671-3840

revisions:

no	date	by	description
A	02.28.13		REV. PER RER COMMENTS

date: 11-21-12
scale: 3/8" = 1"
dr. by: HAMID
chk. by:

drawing no.
W12-60

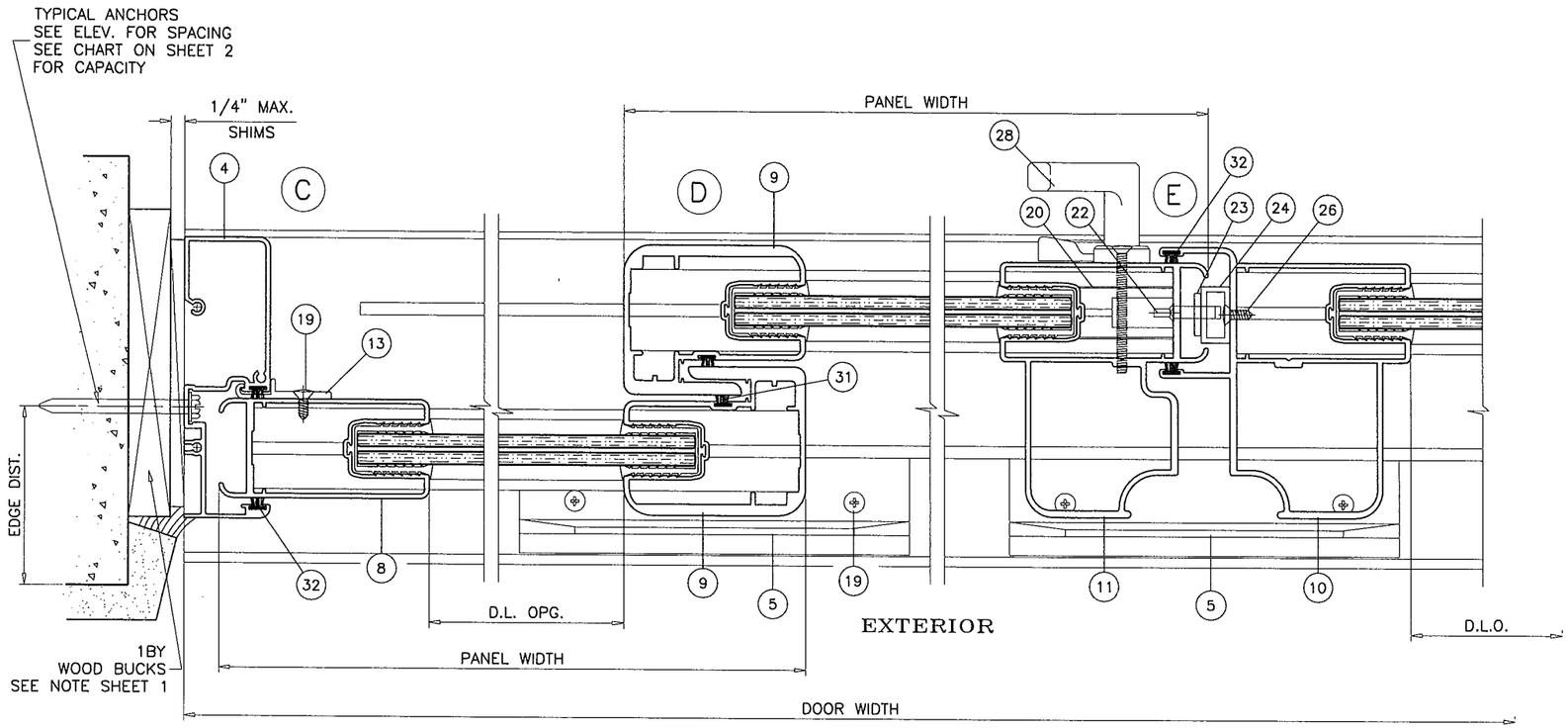

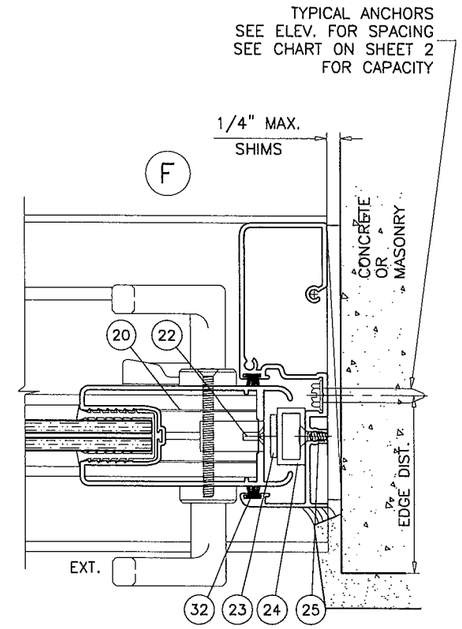

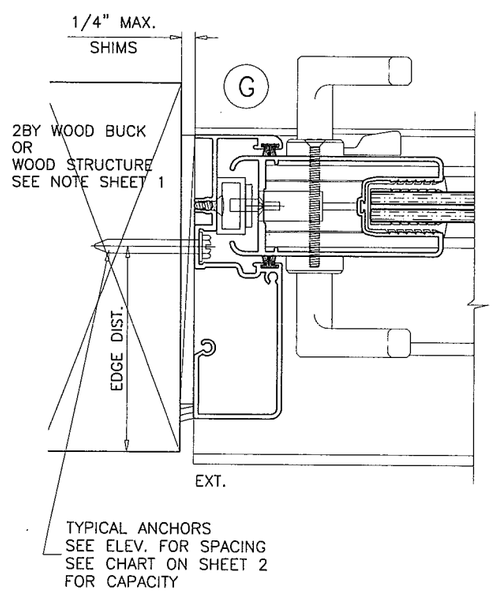

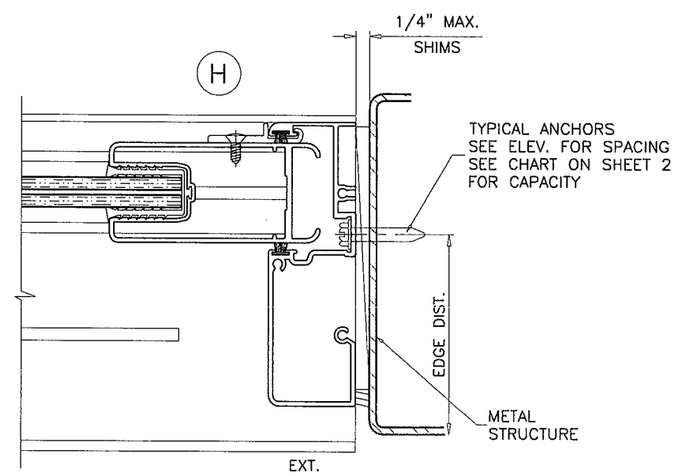

Approved as complying with the
Florida Building Code
Date 03/14/2013
NOA# 12-1213.02
Miami-Dade Product Control
By

Engr: JAVAD AHMAD
CIVIL
FLA. PE # 70592
C.A.N. 3538

MAR 04 2013

AL-FAROOQ CORPORATION
ENGINEERS & PRODUCT DEVELOPMENT
1235 S.W. 87 AVE
MIAMI, FLORIDA 33174
TEL. (305) 264-8100 FAX. (305) 262-6978

COMP-ANL\W12-60TGA

SERIES 'TSD-5000' ALUM SLIDING GLASS DOOR (L.M.I.)

TITAN GLASS & ALUMINUM, LLC.
450 WEST 27 STREET
HIALEAH, FL. 33010
TEL. (305) 888-0911 FAX. (305) 671-3840

revisions:

no	date	by	description
A	02.28.13		REV. PER RER COMMENTS

date: 11-21-12
scale: 3/8" = 1"
dr. by: HAMID
chk. by:

drawing no.
W12-60

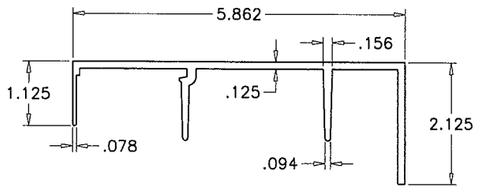

1 FRAME HEAD

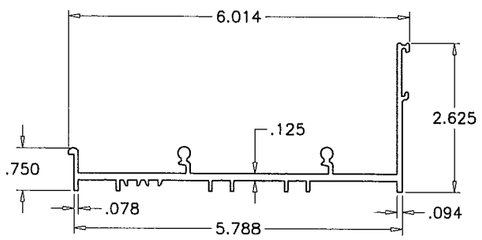

2 FRAME SILL

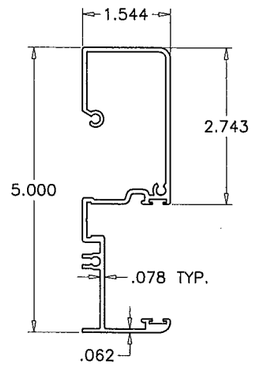

4 FRAME JAMB

HARDNESS = 70±5 SHORE A
TENSILE STRENGTH (BREAK)= 1500 PSI
ELONGATION AT BREAK = 370%
SPECIFIC GRAVITY = 1.40

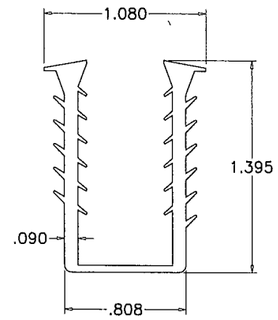

14 GLAZING GASKET
FLEXIBLE PVC
EXTRUDED BY 'CENTRAL PLASTICS'
SCALE 1:1

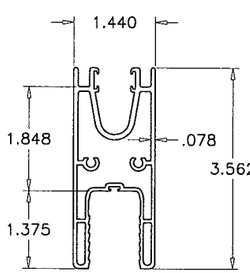

6 PANEL TOP RAIL

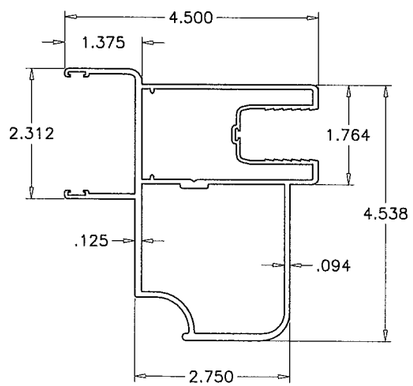

10 FEMALE ASTRAGAL STILE

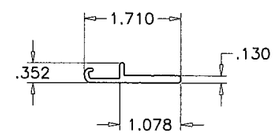

13 FIX. PANEL RETAINING CLIP

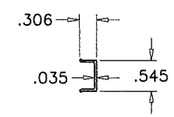

12 JAMB ANCHOR COVER

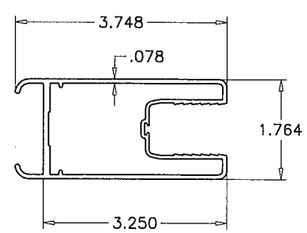

8 JAMB/LOCK STILE

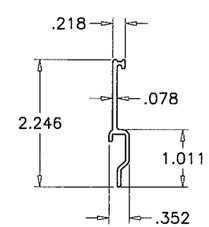

3 SILL RISER

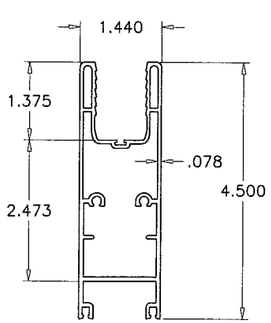

7 PANEL BOTTOM RAIL

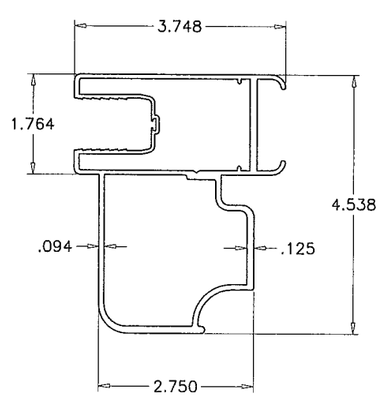

11 MALE ASTRAGAL STILE

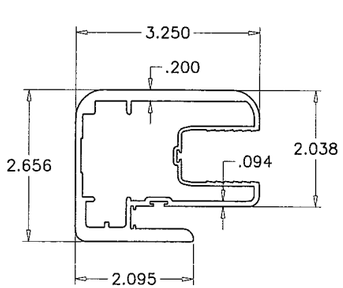

9 INTERLOCK STILE

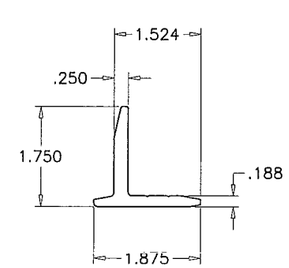

5 RETAINING CLIP

Approved as complying with the
Florida Building Code
Date 03/14/2013
NOA# 12-1213.02
Miami-Dade Product Control
By

Engr: JAVAD AHMAD
CIVIL
FLA. PE # 70592
C.A.N. 3538

MAR 04 2013

AL-FAROOQ CORPORATION
ENGINEERS & PRODUCT DEVELOPMENT
1235 S.W. 87 AVE
MIAMI, FLORIDA 33174
TEL. (305) 264-8100 FAX. (305) 262-6978

COMP-ANL\W12-60TGA

SERIES 'TSD-5000' ALUM SLIDING GLASS DOOR (L.M.I.)

TITAN GLASS & ALUMINUM, LLC.
450 WEST 27 STREET
HIALEAH, FL. 33010
TEL. (305) 888-0911 FAX. (305) 671-3840

revisions:

no	date	by	description
A	02.28.13		REV. PER RER COMMENTS

date: 11-21-12
scale: 3/8" = 1"
dr. by: HAMID
chk. by:

drawing no.
W12-60

sheet 7 of 8

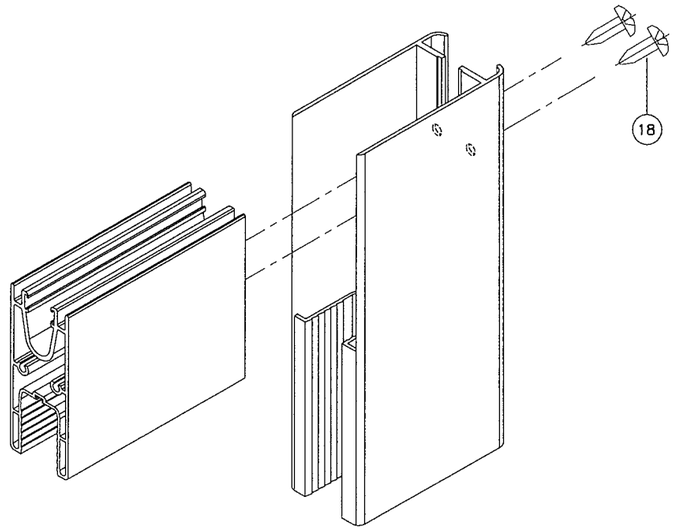

PANEL TOP CORNER

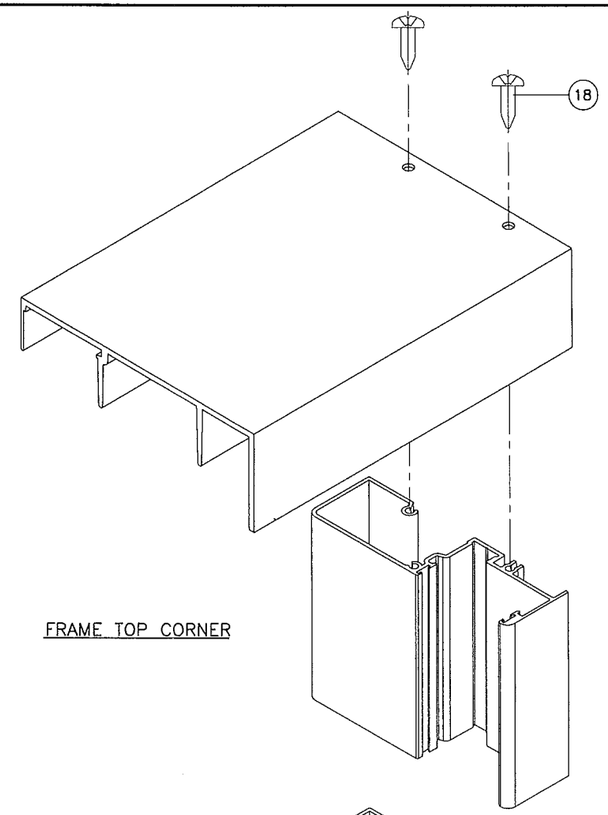

FRAME TOP CORNER

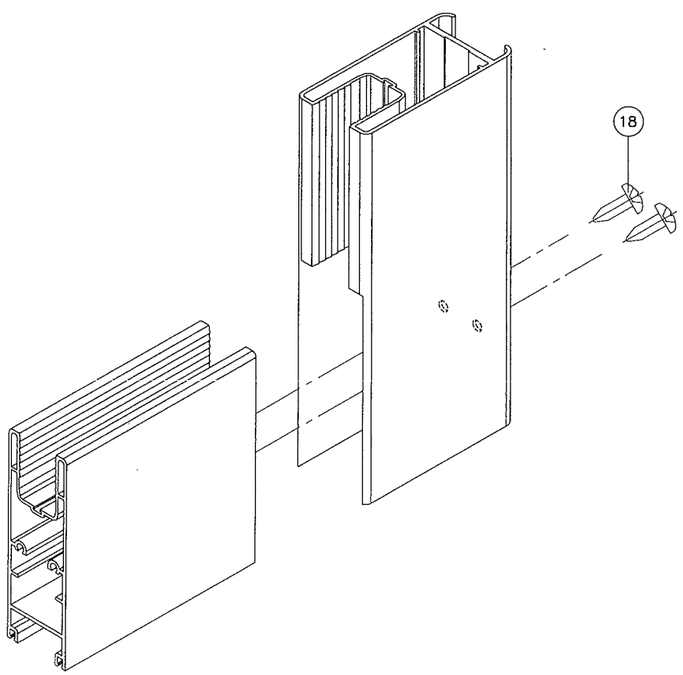

PANEL BOTTOM CORNER

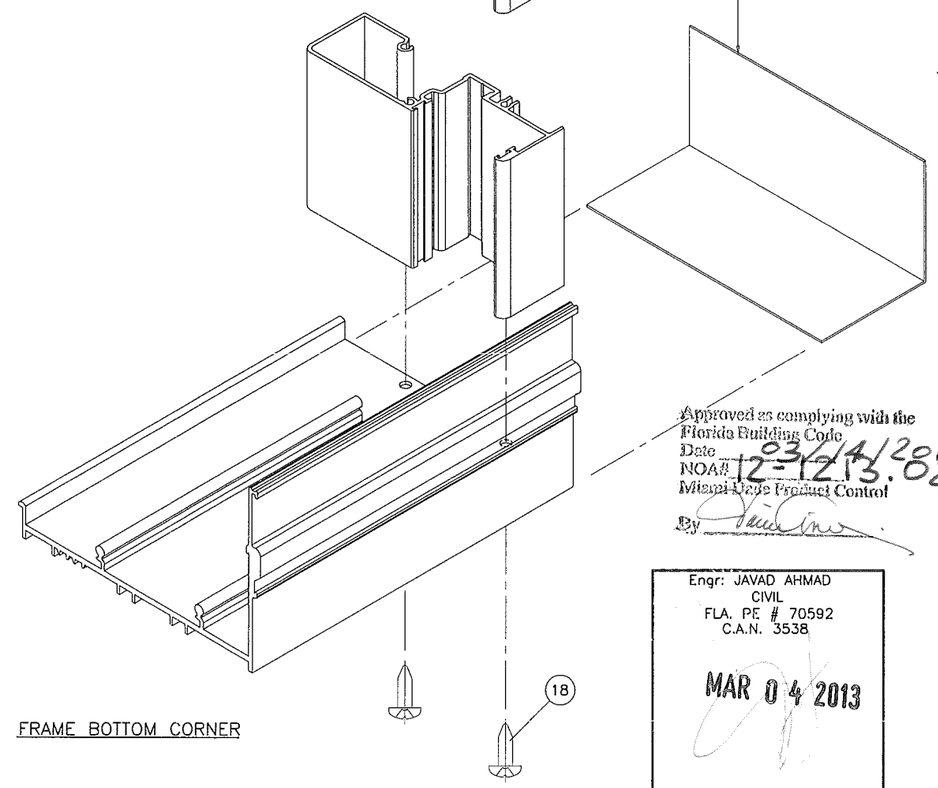

FRAME BOTTOM CORNER

Approved as complying with the
Florida Building Code
Date 03/04/2013
NOA# 12-1213.02
Miami-Dade Product Control
By

Engr: JAVAD AHMAD
CIVIL
FLA. PE # 70592
C.A.N. 3538

MAR 0 4 2013

AL-FAROOQ CORPORATION
ENGINEERS & PRODUCT DEVELOPMENT
1235 S.W. 87 AVE
MIAMI, FLORIDA 33174
TEL. (305) 264-8100 FAX. (305) 262-6978

COMP-ANL\W12-60TGA

SERIES 'TSD-5000' ALUM SLIDING GLASS DOOR (L.M.I.)

TITAN GLASS & ALUMINUM, LLC.
450 WEST 27 STREET
HIALEAH, FL. 33010
TEL. (305) 888-0911 FAX. (305) 671-3840

revisions:

no	date	by	description
A	02.28.13		REV. PER RER COMMENTS

date: 11-21-12
scale: 3/8" = 1"
dr. by: HAMID
chk. by:

drawing no.
W12-60

sheet 8 of 8