MIAMI-DADE COUNTY
DEPARTMENT OF REGULATORY AND ECONOMIC RESOURCES (RER)
BOARD AND CODE ADMINISTRATION DIVISION

MIAMI-DADE COUNTY
PRODUCT CONTROL SECTION
11805 SW 26 Street, Room 208
T (786) 315-2590 F (786) 315-2599
www.miamidade.gov/economy

NOTICE OF ACCEPTANCE (NOA)

PGT Industries
1070 Technology Drive
North Venice, FL 34275

SCOPE:

This NOA is being issued under the applicable rules and regulations governing the use of construction materials. The documentation submitted has been reviewed and accepted by Miami-Dade County RER - Product Control Section to be used in Miami Dade County and other areas where allowed by the Authority Having Jurisdiction (AHJ).

This NOA shall not be valid after the expiration date stated below. The Miami-Dade County Product Control Section (In Miami Dade County) and/or the AHJ (in areas other than Miami Dade County) reserve the right to have this product or material tested for quality assurance purposes. If this product or material fails to perform in the accepted manner, the manufacturer will incur the expense of such testing and the AHJ may immediately revoke, modify, or suspend the use of such product or material within their jurisdiction. RER reserves the right to revoke this acceptance, if it is determined by Miami-Dade County Product Control Section that this product or material fails to meet the requirements of the applicable building code.

This product is approved as described herein, and has been designed to comply with the Florida Building Code, including the High Velocity Hurricane Zone.

DESCRIPTION: Series "AW–740" Aluminum Awning Window – L.M.I.

APPROVAL DOCUMENT: Drawing No. **MD-AW740LM**, titled "Awning Window Details – LM & SM", sheets 1 through 10 of 10, dated 08/08/12, prepared by manufacturer, signed and sealed by Anthony Lynn Miller, P.E., bearing the Miami–Dade County Product Control Approval stamp with the Notice of Acceptance number and approval date by the Miami–Dade County Product Control Section.

MISSILE IMPACT RATING: Large and Small Missile Impact Resistant.

LABELING: Each unit shall bear a permanent label with the manufacturer's name or logo, city, state, model/series, and following statement: "Miami-Dade County Product Control Approved", unless otherwise noted herein.

RENEWAL of this NOA shall be considered after a renewal application has been filed and there has been no change in the applicable building code negatively affecting the performance of this product.

TERMINATION of this NOA will occur after the expiration date or if there has been a revision or change in the materials, use, and/or manufacture of the product or process. Misuse of this NOA as an endorsement of any product, for sales, advertising or any other purposes shall automatically terminate this NOA. Failure to comply with any section of this NOA shall be cause for termination and removal of NOA.

ADVERTISEMENT: The NOA number preceded by the words Miami-Dade County, Florida, and followed by the expiration date may be displayed in advertising literature. If any portion of the NOA is displayed, then it shall be done in its entirety.

INSPECTION: A copy of this entire NOA shall be provided to the user by the manufacturer or its distributors and shall be available for inspection at the job site at the request of the Building Official.

This NOA consists of this page 1 and evidence page E-1, as well as approval document mentioned above.

The submitted documentation was reviewed by **Manuel Perez, P.E.**

MIAMI-DADE COUNTY APPROVED

4/4/13

PGT Industries

NOTICE OF ACCEPTANCE: EVIDENCE SUBMITTED

A. DRAWINGS

1. Manufacturer's die drawings and sections.
2. Drawing No. **MD-AW740LM**, titled "Awning Window Details – LM & SM", sheets 1 through 10 of 10, dated 08/08/12, signed and sealed by Anthony Lynn Miller, P.E.

B. TESTS

1. Test reports on: 1) Air Infiltration Test, per FBC, TAS 202-94
   2) Uniform Static Air Pressure Test, Loading per FBC TAS 202-94
   3) Water Resistance Test, per FBC, TAS 202-94
   4) Large Missile Impact Test per FBC, TAS 201-94
   5) Cyclic Wind Pressure Loading per FBC, TAS 203-94
   6) Forced Entry Test, per FBC 2411 3.2.1, TAS 202-94

   along with marked-up drawings and installation diagram of a series CA740P alum. projected (awning) window, prepared by Fenestration Testing Laboratory, Inc. Test Report No. **FTL-7061**, dated 10/03/12, signed and sealed by Marlin D. Brinson, P.E.

C. CALCULATIONS

1. Anchor verification calculations and structural analysis, complying with FBC-2010, dated 12/07/12, prepared by manufacturer, signed and sealed by Anthony Lynn Miller, P.E.
2. Glazing complies with ASTM E1300-04

D. QUALITY ASSURANCE

1. Miami-Dade Department of Regulatory and Economic Resources (RER)

E. MATERIAL CERTIFICATIONS

1. Notice of Acceptance No. **11–0624.01** issued to **E.I. DuPont DeNemours & Co., Inc.** for their **"DuPont Butacite® PVB Interlayer"** dated 09/08/11, expiring on 12/11/16.
2. Notice of Acceptance No. **11–0624.02** issued to **E.I. DuPont DeNemours & Co.**, Inc. for their **"DuPont SentryGlas® Interlayer"** dated 08/25/11, expiring on 01/14/17.

F. STATEMENTS

1. Statement letter of conformance, complying with **FBC–2010**, dated December 10, 2012, issued by manufacturer, signed and sealed by Anthony Lynn Miller, P.E.
2. Statement letter of no financial interest, dated December 10, 2012, issued by manufacturer, signed and sealed by Anthony Lynn Miller, P.E.
3. Proposal No. **12–1499** issued by Product Control, dated July 31, 2012, signed by Manuel Perez, P.E.

G. OTHER

1. None.

Manuel Perez

Manuel Perez, P.E.
Product Control Examiner
NOA No. 12-1218.07
Expiration Date: April 11, 2018
Approval Date: April 11, 2013

GENERAL NOTES: SERIES 740
IMPACT-RESISTANT AWNING WINDOW

1) THIS PRODUCT HAS BEEN DESIGNED & TESTED TO COMPLY WITH THE REQUIREMENTS OF THE FLORIDA BUILDING CODE, INCLUDING THE HIGH VELOCITY HURRICANE ZONE (HVHZ). FOR INSULATED GLASS INSTALLATIONS ABOVE 30' IN THE HVHZ, THE OUTBOARD LITE (CAP) MUST TEMPERED.

2) SHUTTERS ARE NOT REQUIRED WHEN USED IN WIND-BORNE DEBRIS REGIONS.

3) FOR MASONRY APPLICATIONS IN MIAMI-DADE COUNTY, USE ONLY MIAMI-DADE COUNTY APPROVED MASONRY ANCHORS. MATERIALS USED FOR ANCHOR EVALUATIONS WERE SOUTHERN PINE, ASTM C90 CONCRETE MASONRY UNITS AND CONCRETE WITH MIN. KSI PER ANCHOR TYPE, SEE TABLE 3, SHEET 4.

4) ALL WOOD BUCKS LESS THAN 1-1/2" THICK ARE TO BE CONSIDERED 1X INSTALLATIONS. 1X WOOD BUCKS ARE OPTIONAL IF UNIT IS INSTALLED DIRECTLY TO SUBSTRATE. WOOD BUCKS DEPICTED AS 2X ARE 1-1/2" THICK OR GREATER. 1X AND 2X BUCKS (WHEN USED) SHALL BE DESIGNED TO PROPERLY TRANSFER LOADS TO THE STRUCTURE. WOOD BUCK DESIGN AND INSTALLATION IS THE RESPONSIBILITY OF THE ENGINEER OR ARCHITECT OF RECORD.

5) ANCHOR EMBEDMENT TO BASE MATERIAL SHALL BE BEYOND WALL DRESSING OR STUCCO. USE ANCHORS OF SUFFICIENT EMBEDMENT AS SPECIFIED ON TABLE 3, SHEET 4. NARROW JOINT SEALANT IS USED ON ALL FOUR CORNERS OF THE FRAME. INSTALLATION ANCHORS SHOULD BE SEALED. OVERALL SEALING/FLASHING STRATEGY FOR WATER RESISTANCE OF INSTALLATION SHALL BE DONE BY OTHERS AND IS BEYOND THE SCOPE OF THESE INSTRUCTIONS.

6) SHIMS ARE REQUIRED AT EACH ANCHOR LOCATION WHERE THE PRODUCT IS NOT FLUSH TO THE SUBSTRATE. USE SHIMS CAPABLE OF TRANSFERRING APPLIED LOADS. WOOD BUCKS, BY OTHERS, MUST BE SUFFICIENTLY ANCHORED TO RESIST LOADS IMPOSED ON THEM BY THE WINDOW.

7) DESIGN PRESSURES:
A. NEGATIVE DESIGN LOADS BASED ON STRUCTURAL TEST PRESSURE, FRAME ANALYSIS AND GLASS PER ASTM E1300.
B. POSITIVE DESIGN LOADS BASED ON WATER TEST PRESSURE, STRUCTURAL TEST PRESSURE, FRAME ANALYSIS AND GLASS PER ASTM E1300.

8) THE ANCHORAGE METHODS SHOWN HAVE BEEN DESIGNED TO RESIST THE WINDLOADS CORRESPONDING TO THE REQUIRED DESIGN PRESSURE. THE 33-1/3% STRESS INCREASE HAS NOT BEEN USED IN THE DESIGN OF THIS PRODUCT. THE 1.6 LOAD DURATION FACTOR WAS USED FOR THE EVALUATION OF ANCHORS INTO WOOD. ANCHORS THAT COME INTO CONTACT WITH OTHER DISSIMILAR MATERIALS SHALL MEET THE REQUIREMENTS OF THE FLORIDA BUILDING CODE FOR CORROSION RESISTANCE.

9) REFERENCES: TEST REPORTS FTL-7061, 3579, 3580, 3724; ELCO ULTRACON NOA; ELCO CRETEFLEX NOA; ANSI/AF&PA NDS FOR WOOD CONSTRUCTION AND ADM ALUMINUM DESIGN MANUAL.

DESIGN PRESSURE RATING	IMPACT RATING
VARIES, SEE SHEETS 5-9	RATED FOR LARGE & SMALL MISSILE IMPACT RESISTANCE

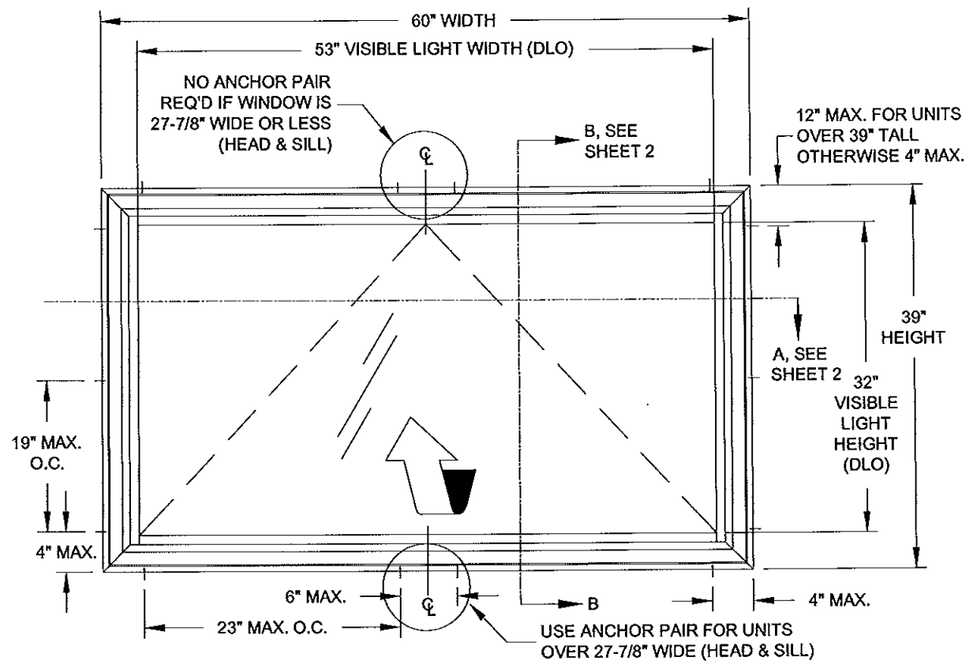

TYP. ELEVATION OF AWNING WINDOW

TABLE 1:

	Glass Types	Sheet #
1	5/16" Lami (1/8" An - .090" PVB - 1/8" An)	5
2	7/16" Lami (3/16" An - .090" SGP - 3/16" An)	6
3	7/8" Lami. IG (1/8" An - 7/16" Air - 1/8" An - .090" PVB - 1/8" An)	7
4	7/8" Lami. IG (1/8" T - 7/16" Air - 1/8" An - .090" PVB - 1/8" An)	8
5	7/8" Lami. IG (3/16" An - 1/4" Air - 3/16" An - .090" SGP - 3/16" An)	9
6	7/8" Lami. IG (3/16" T - 1/4" Air - 3/16" An - .090" SGP - 3/16" An)	9

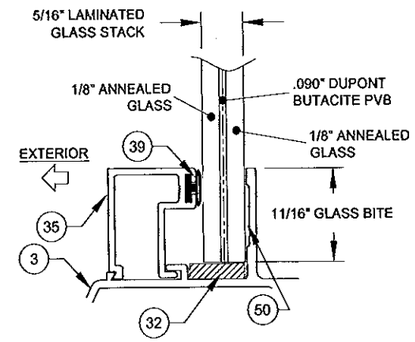

GLASS TYPE 1

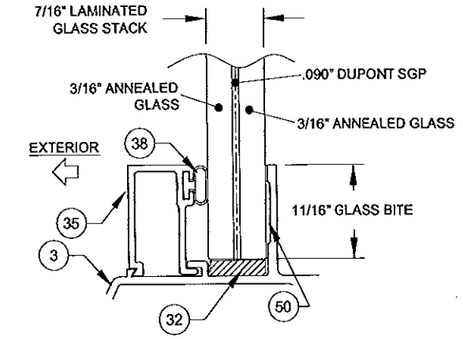

GLASS TYPES 2

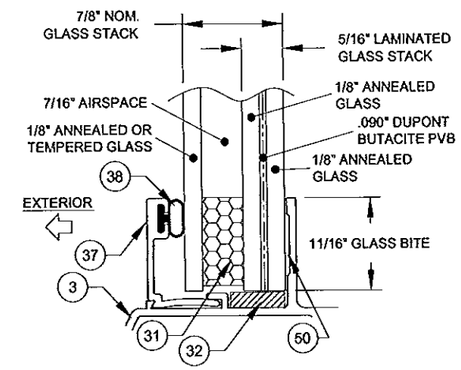

GLASS TYPES 3 & 4

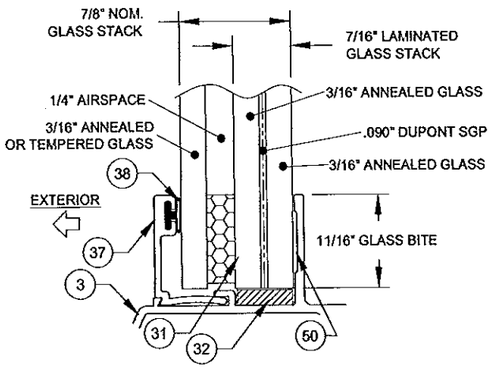

GLASS TYPES 5 & 6

GENERAL NOTES.....1
ELEVATION.....1
GLAZING DETAILS.....1
INSTALLATION.....2
ASSEMBLY TUBE DETAILS.....3
ANCHOR SPECIFICATIONS.....4
ANCHOR QUANTITIES.....4
DESIGN PRESSURES.....5-9
ASSEMBLY DETAILS/BOM.....10

ANTHONY LYNN MILLER
LICENSE
No. 58705
3/18/13
STATE OF FLORIDA
PROFESSIONAL ENGINEER
A. LYNN MILLER, P.E.
P.E.# 58705

PGT®
1070 TECHNOLOGY DRIVE
N. VENICE, FL 34275
P.O. BOX 1529
NOKOMIS, FL 34274
CERT. OF AUTH. #29296

Approved as complying with the Florida Building Code
Date April 11 2013
NOA# 12-1218.04
Miami Dade Product Control
By Manuel Perez

Revised By:	Date:	Revision:
Revised By:	Date:	Revision:

Description:	Drawn By:
GENERAL NOTES & ELEVATION	J ROSOWSKI
Title: AWNING WINDOW DETAILS - LM & SM	Date: 08/08/12

Series/Model:	Scale:	Sheet:	Drawing No.	Rev:
AW-740	NTS	1 OF 10	MD-AW740LM	

INSTALLATION OPTION 1

INSTALLATION ANCHORS INTO 2X WOOD.

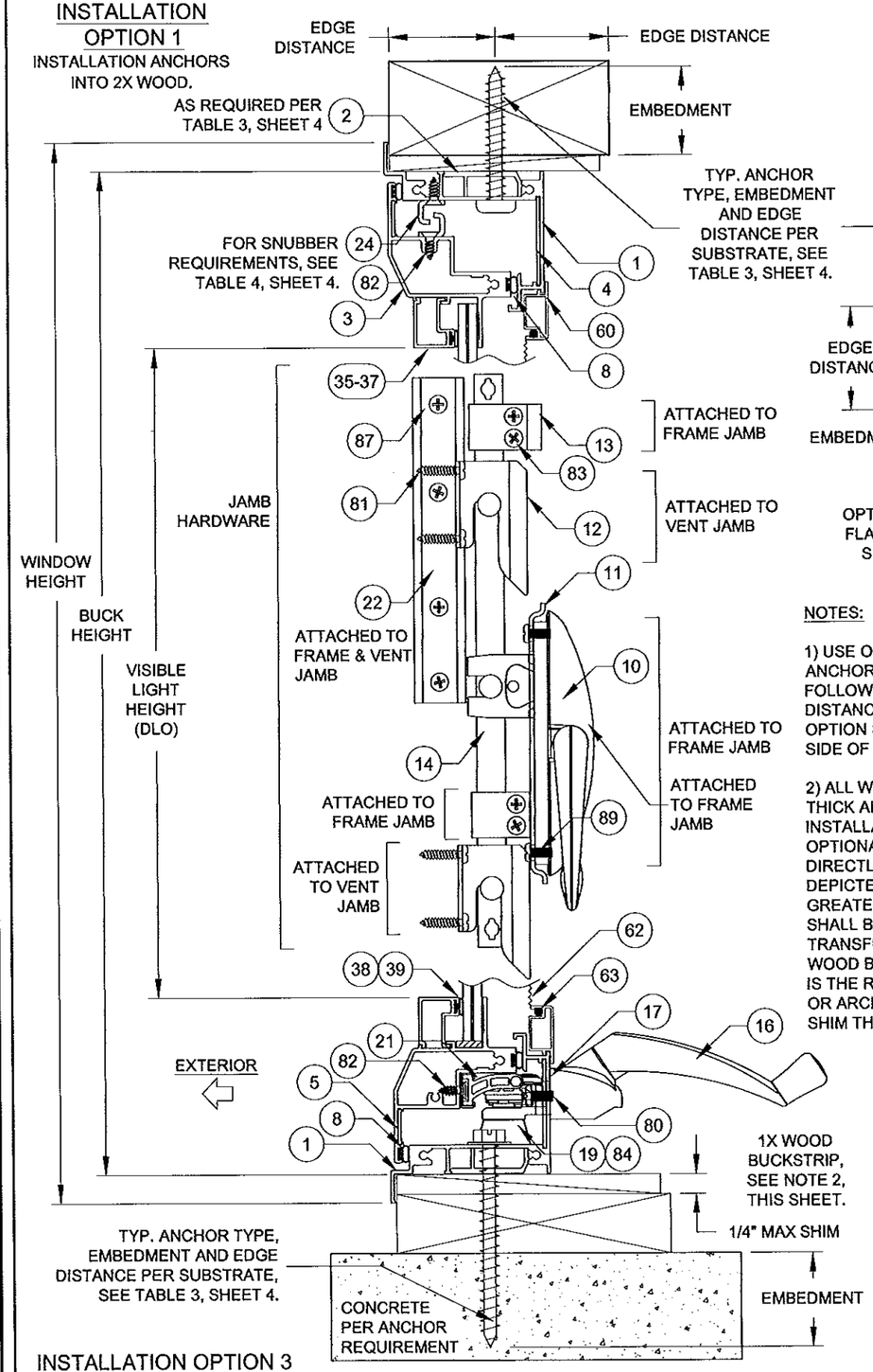

INSTALLATION OPTION 3

INSTALLATION ANCHORS THROUGH 1X BUCKSTRIP INTO MASONRY.

VERTICAL SECTION B-B

INSTALLATION OPTION 2

INSTALLATION ANCHORS DIRECTLY INTO MASONRY.

INSTALLATION OPTION 4

INSTALLATION ANCHORS DIRECTLY INTO METAL.

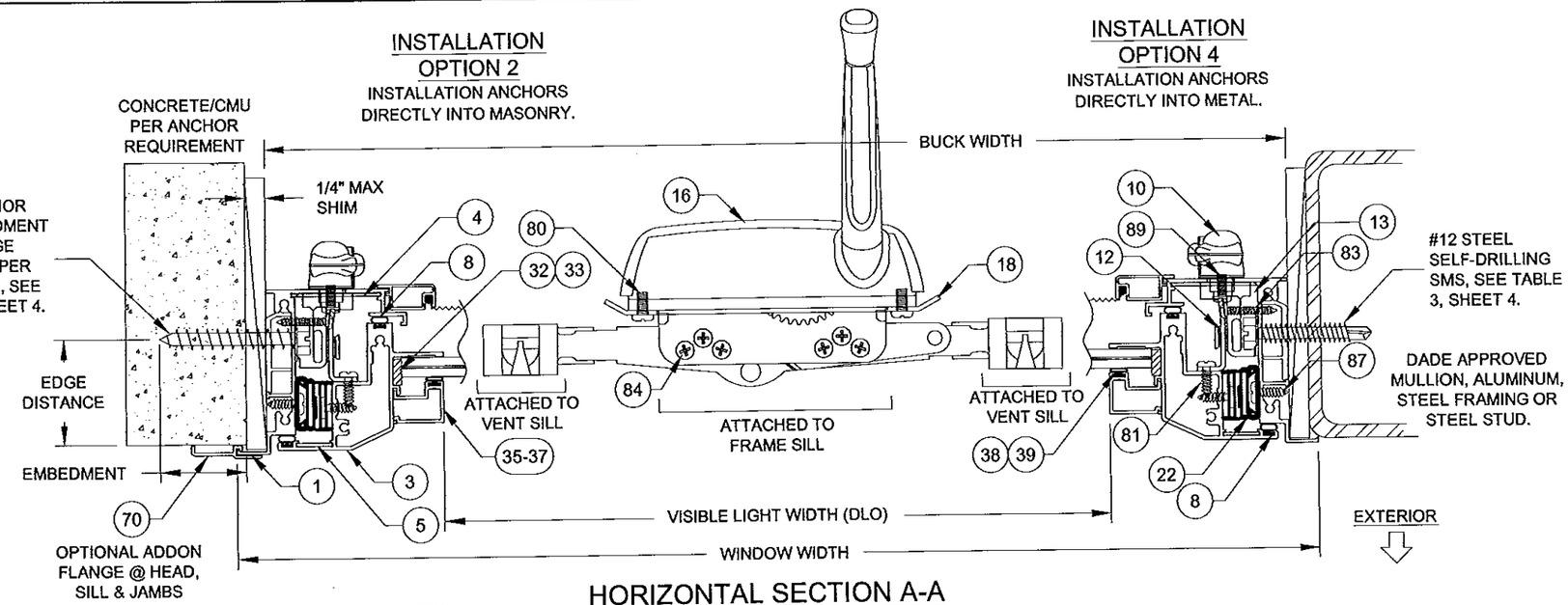

HORIZONTAL SECTION A-A

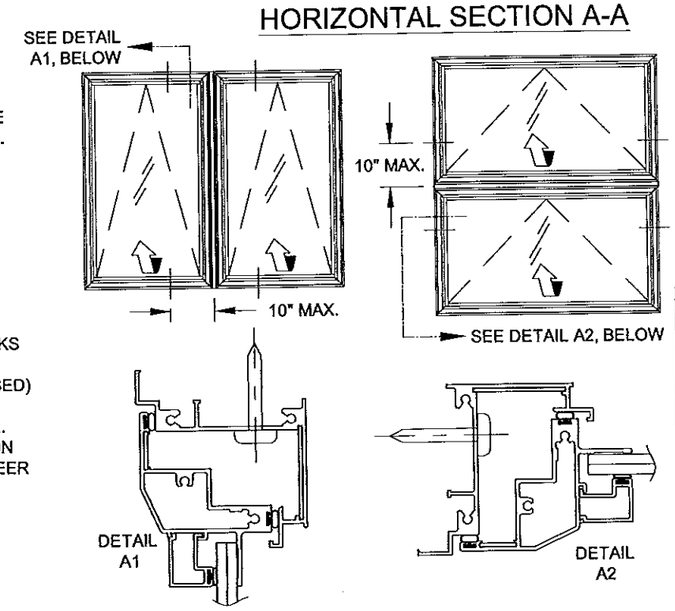

NOTES:

1) USE ONLY SUBSTRATE-APPROPRIATE ANCHORS LISTED ON TABLE 3, SHEET 4. FOLLOW EMBEDMENT AND EDGE DISTANCE LIMITS. ANY INSTALLATION OPTION SHOWN MAY BE USED ON ANY SIDE OF THE WINDOW.

2) ALL WOOD BUCKS LESS THAN 1-1/2" THICK ARE TO BE CONSIDERED 1X INSTALLATIONS. 1X WOOD BUCKS ARE OPTIONAL. UNIT MAY BE INSTALLED DIRECTLY TO SUBSTRATE. WOOD BUCKS DEPICTED AS 2X ARE 1-1/2" THICK OR GREATER. 1X AND 2X BUCKS (WHEN USED) SHALL BE DESIGNED TO PROPERLY TRANSFER LOADS TO THE STRUCTURE. WOOD BUCK DESIGN AND INSTALLATION IS THE RESPONSIBILITY OF THE ENGINEER OR ARCHITECT OF RECORD. MAXIMUM SHIM THICKNESS TO BE 1/4".

NOTES:

1) WHEN INSTALLING COMBINATION UNITS, ADDITIONAL INSTALLATION ANCHORS MAY NEED TO BE INSTALLED THROUGH THE WINDOW FRAMES AT 10" MAX. FROM EACH SIDE OF THE FRAME ASSEMBLY TUBE CENTERLINE. SEE TABLE BELOW:

Additional Anchors Required on each Side of the Frame Assembly Tube (FAT)

	Window Width	Anchor Type A	Anchor Type B, C & D
Vertical FAT	17" - 22.9"	0	0
	23" - 25.9"	0	1
	26"+	1	1
	Window Height	**Anchor Type A**	**Anchor Type B, C & D**
Horizontal FAT	17" - 22.9"	0	0
	23" - 25.9"	0	1
	26"+	1	1

VISIBLE LIGHT FORMULAS

WIDTH: WINDOW WIDTH - 7
HEIGHT: WINDOW HEIGHT - 7

Approved as complying with the Florida Building Code
Date April 11, 2013
NOA# 12.1218.07
Miami Dade Product Control
By Manuel Sua

ANTHONY LYNN MILLER
LICENSE
No. 58705
3/18/13
STATE OF FLORIDA
PROFESSIONAL ENGINEER
A. LYNN MILLER, P.E.
P.E.# 58705

PGT®

1070 TECHNOLOGY DRIVE
N. VENICE, FL 34275
P.O. BOX 1529
NOKOMIS, FL 34274

CERT. OF AUTH. #29296

Revised By:	Date:	Revision:
Revised By:	Date:	Revision:

Description: GENERAL NOTES & ELEVATION			Drawn By: J ROSOWSKI	
Title: AWNING WINDOW DETAILS - LM & SM				Date: 08/08/12
Series/Model: AW-740	Scale: NTS	Sheet: 2 OF 10	Drawing No. MD-AW740LM	Rev:

AWNING (X)

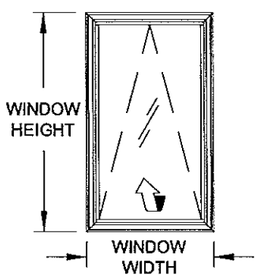

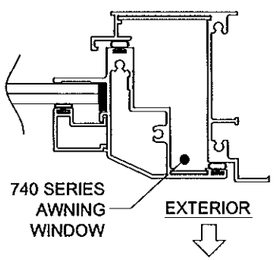

FOR SINGLE UNITS:

1) DETERMINE YOUR WINDOW SIZE AND GLASS.

2) KNOWING YOUR ANCHOR TYPE AND SUBSTRATE, DETERMINE YOUR ANCHOR GROUP FROM TABLE 3, SHEET 4.

3) FROM SHEETS 5-9, FIND THE SHEET FOR YOUR GLASS TYPE. FIND THE PRODUCT'S DESIGN PRESSURE FROM THE TABLE LABELED *"DESIGN PRESSURE (PSF) FOR SINGLE WINDOWS, ALL ANCHOR GROUPS"*.

4) DIMENSIONS SHOWN ARE WINDOW. FOR SIZES NOT SHOWN, ROUND UP TO THE NEXT AVAILABLE WIDTH OR HEIGHT DIMENSION SHOWN ON THE TABLES.

5) USING THE TABLE LABELED *"WINDOW ANCHORS REQUIRED"* (TABLE 2, SHEET 4), DETERMINE THE NUMBER OF ANCHORS NEEDED IN THE HEAD, SILL AND JAMBS OF YOUR WINDOW.

6) INSTALL AS PER THE INSTRUCTIONS ON SHEET 2.

AWNING / AWNING (XX)

FIGURE 1:

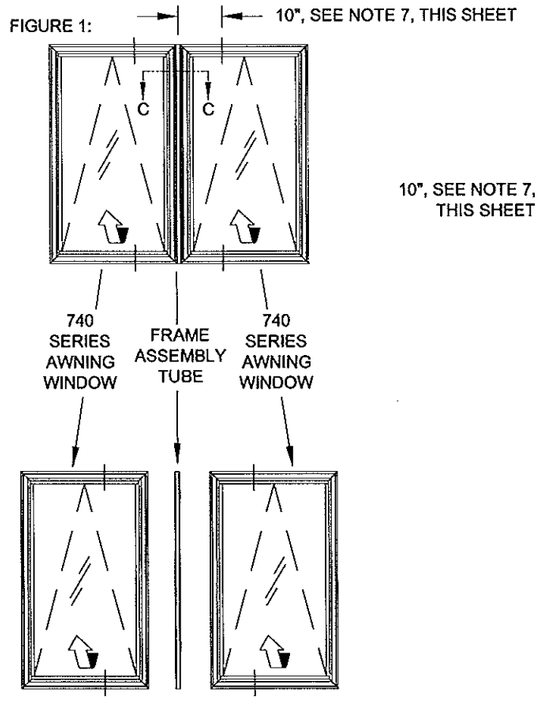

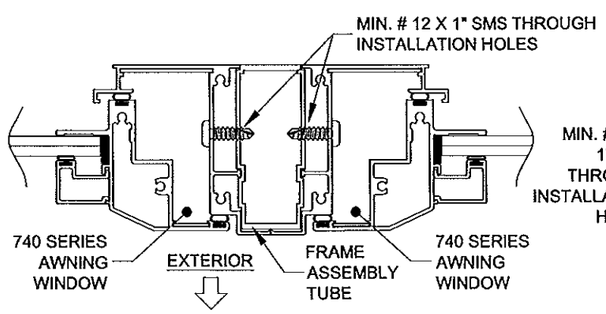

HORIZONTAL SECTION C-C

AWNING / CASEMENT / FIXED CASEMENT (XXO)

FIGURE 2:

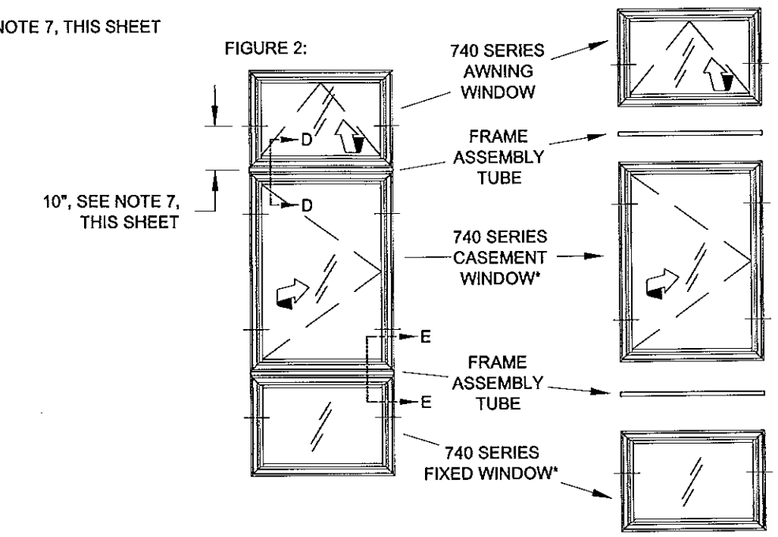

*SEE PRODUCT'S NOA FOR INSTALLATION SPECS

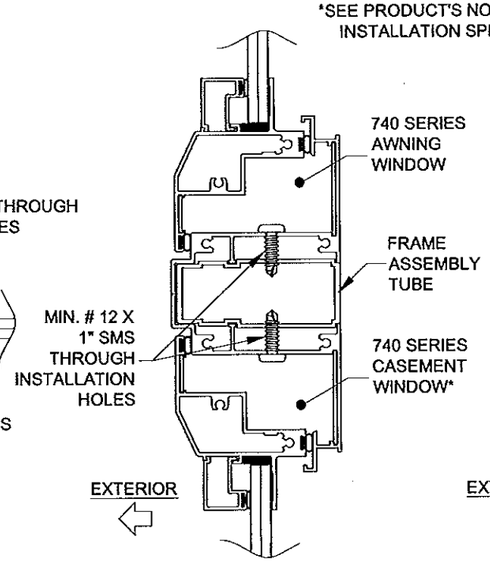

VERTICAL SECTION D-D

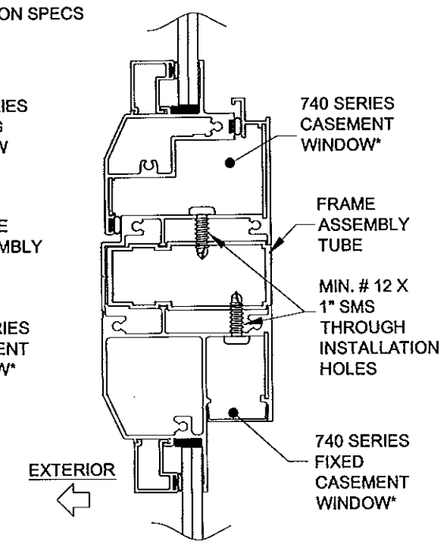

VERTICAL SECTION E-E

FOR EACH WINDOW IN A VERTICALLY OR HORIZONTALLY COMBINED ASSEMBLY:

1) DETERMINE EACH INDIVIDUAL WINDOW TYPE, SIZE AND GLASS MAKEUP, SEE FIGURES 1 & 2, THIS SHEET. DETERMINE YOUR ANCHOR GROUP FROM TABLE 3, SHEET 4.

2) FROM SHEETS 5-9, FIND THE SHEET FOR YOUR GLASS TYPE.

3) FIND THE DESIGN PRESSURE FROM THE TABLES LABELED *"DESIGN PRESSURE (PSF) FOR WINDOWS ATTACHED TO A VERTICAL FRAME ASSEMBLY TUBE"* OR *"DESIGN PRESSURE (PSF) FOR WINDOWS ATTACHED TO A HORIZONTAL FRAME ASSEMBLY TUBE"*, DEPENDING ON WHICH WAY THE FRAME ASSEMBLY TUBE IS ORIENTATED. THIS MUST BE DONE FOR EACH WINDOW IN THE ASSEMBLY, AND THE LOWEST DESIGN PRESSURE APPLIES TO THE ENTIRE ASSEMBLY. DIMENSIONS SHOWN ARE WINDOW. FOR SIZES NOT SHOWN, ROUND UP TO THE NEXT AVAILABLE WIDTH OR HEIGHT DIMENSION SHOWN ON THE TABLES.

4) USING THE TABLE LABELED *"WINDOW ANCHORS REQUIRED"* (TABLE 2, SHEET 4), DETERMINE THE NUMBER OF ANCHORS NEEDED IN THE HEAD, SILL AND JAMBS OF YOUR WINDOW.

5) INSTALL AS PER THE INSTRUCTIONS ON SHEETS 2-3. NOTE THAT ADDITIONAL ANCHORS THROUGH THE WINDOW FRAME INTO THE SUBSTRATE MAY BE REQUIRED (SEE SHEET 2), AND THAT MIN. # 12 X 1" ANCHORS ARE TO BE USED THROUGH THE FRAME INTO THE FRAME ASSEMBLY TUBE (SEE DETAILS ON THIS SHEET).

Approved as complying with the Florida Building Code
Date April 11, 2013
NOA# 12-1218.07
Miami Dade Product Control
By Manuel Perez

FRAME ASSEMBLY TUBE NOTES:

1) DIMENSIONS SHOWN ARE WINDOW DIMENSIONS FOR EACH INDIVIDUAL WINDOW. FOR SIZES NOT SHOWN, ROUND UP TO THE NEXT AVAILABLE WIDTH OR HEIGHT DIMENSION SHOWN ON THE TABLES.

2) ANY 740-SERIES PRODUCT (CASEMENT, AWNING OR FIXED CASEMENT) MAY BE ATTACHED TO THE FRAME ASSEMBLY TUBE. FOR ALL WINDOWS, USE THE WINDOW'S NOA FOR ANCHORAGE, SIZE AND DESIGN PRESSURE LIMITATIONS.

3) ALL WINDOWS IN THE COMBINATION UNIT MUST BE ABLE TO INDIVIDUALLY COMPLY WITH THE REQUIREMENTS OF THEIR RESPECTIVE NOA.

4) FRAME ASSEMBLY TUBE TO BE FASTENED TO WINDOW, AS SHOW IN DETAILS, WITH MIN. #12 X 1" SHEET METAL SCREWS. USE THE SAME SPACING AND QUANTITY AS THE OPPOSITE FRAME MEMBER.

5) THE FRAME ASSEMBLY TUBE MAY NOT EXCEED 62" IN LENGTH (AS USED IN A 63" FLANGED WINDOW) OR BE USED IN TEE OR CROSS CONFIGURATIONS.

6) THE FRAME ASSEMBLY TUBE IS NOT REQUIRED TO BE CLIPPED TO THE SUBSTRATE. ALL EXTERIOR JOINTS TO BE SEALED BY INSTALLER.

7) FOR ALL COMBINATION UNITS, ADDITIONAL INSTALLATION ANCHORS MAY NEED TO BE INSTALLED THROUGH THE WINDOW FRAMES AT 10" MAX. FROM EACH SIDE OF THE FRAME ASSEMBLY TUBE CENTERLINE. SEE TABLE BELOW:

Additional Anchors Required on each Side of the Frame Assembly Tube (FAT)

	Window Width	Anchor Type A	Anchor Type B, C & D
Vertical FAT	17" - 22.9"	0	0
	23" - 25.9"	0	1
	26"+	1	1
	Window Height	**Anchor Type A**	**Anchor Type B, C & D**
Horizontal FAT	17" - 22.9"	0	0
	23" - 25.9"	0	1
	26"+	1	1

Revised By: | Revision: | Rev.:
Drawn By: J ROSOWSKI | Date: 08/08/12 | Date:
Description: FRAME ASSEMBLY TUBE DETAILS
Title: AWNING WINDOW DETAILS - LM & SM
Series/Model: AW-740 | Scale: NTS | Sheet: 3 OF 10 | Drawing No. MD-AW740LM

PGT®
1070 TECHNOLOGY DRIVE
N. VENICE, FL 34275
P.O. BOX 1529
NOKOMIS, FL 34274
CERT. OF AUTH. #29296

ANTHONY LYNN MILLER
LICENSE
No. 58705
3/18/13
STATE OF FLORIDA
PROFESSIONAL ENGINEER
A. LYNN MILLER, P.E.
P.E.# 58705

TABLE 2:

Window Anchors Required

Window Height (in)		Window Width (in)	under 23"			25-15/16"			27-7/8"			30-3/4"			32"			34"			37"			46"			53-1/8"			60"		
			Anchor Group			Anchor Group			Anchor Group			Anchor Group			Anchor Group			Anchor Group			Anchor Group			Anchor Group			Anchor Group			Anchor Group		
			A	B	C & D	A	B	C & D	A	B	C & D	A	B	C & D	A	B	C & D	A	B	C & D	A	B	C & D	A	B	C & D	A	B	C & D	A	B	C & D
	under 23"	Jamb	2	2	2	2	2	2	2	2	2	2	2	2	2	2	2	2	2	2	2	2	2	2	2	2	2	2	2	2	2	2
		Head/Sill	2	2	2	2	2	2	2	2	2	4	4	4	4	4	4	4	4	4	4	4	4	4	4	4	4	6	4	6	6	4
	25-15/16"	Jamb	2	2	2	2	2	2	2	2	2	2	2	2	2	2	2	2	2	2	2	2	2	2	2	2	2	2	2	2	2	2
		Head/Sill	2	2	2	2	2	2	2	2	2	4	4	4	4	4	4	4	4	4	4	4	4	4	6	4	4	6	4	6	6	4
	39"	Jamb	3	3	2	3	4	2	3	4	2	3	4	2	3	4	2	3	4	2	3	4	2	3	4	2	3	4	2	3	4	2
		Head/Sill	2	2	2	2	2	2	2	2	2	4	4	4	4	4	4	4	4	4	4	4	4	4	6	4	6	6	4	6	8	4
	50-5/8"	Jamb	4	5	4	4	5	4	4	5	4	4	6	4	5	6	4	5	6	4	5	6	4	5	6	4						
		Head/Sill	2	2	2	2	2	2	2	2	2	4	4	4	4	4	4	4	4	4	4	4	4	4	6	4						
	60"	Jamb	5	6	4	5	6	4	5	7	4	6	7	4	6	7	4	6	7	4	6	7	4									
		Head/Sill	2	2	2	2	2	2	2	2	2	4	4	4	4	4	4	4	4	4	4	4	4									
	63"	Jamb	5	6	4	5	7	4	6	7	4	6	7	4	6	7	4	6	7	4	6	7	4									
		Head/Sill	2	2	2	2	2	2	2	2	2	4	4	4	4	4	4	4	4	4	4	4	4									
	67"	Jamb	5	7	4	6	7	4	6	7	4	6	8	4	6	8	4	6	8	4												
		Head/Sill	2	2	2	2	2	2	2	2	2	4	4	4	4	4	4	4	4	4												
	72"	Jamb	6	7	5	6	8	5	6	8	5	7	8	5	7	8	5															
		Head/Sill	2	2	2	2	2	2	2	2	2	4	4	4	4	4	4															
	76"	Jamb	6	7	5	7	8	5	7	9	5	7	9	5																		
		Head/Sill	2	2	2	2	2	2	2	2	2	4	4	4																		
	84"	Jamb	7	8	5	7	9	5	8	10	5																					
		Head/Sill	2	2	2	2	2	2	2	2	2																					

USE THIS TABLE FOR ALL WINDOWS PER THE ELEVATIONS ON SHEET 1. DIMENSIONS SHOWN ARE WINDOW TIP-TO-TIP. FOR SIZES NOT SHOWN, ROUND UP TO THE NEXT AVAILABLE WIDTH OR HEIGHT DIMENSION SHOWN ON THE TABLE.

TABLE 3:

Group	Anchor	Substrate	Min. Edge Distance	Min. O.C. Distance	Min. Embedment	Anchor Plate Required?
A	1/4" steel Ultracon	Hollow Block	1"	6"	1-1/4"	No
	#14, steel SMS (G5) or #14, 410 SS SMS	S. Pine	5/8"	1"	1-3/8"	No
		6063-T5 Alum.	3/8"	5/8"	0.050	No
		A36 Steel	3/8"	5/8"	0.050	No
		A653 Stud, Gr. 33	3/8"	5/8"	.035", 20 Ga.	No
B	#12, steel SMS (G5) or #12, 410 SS SMS	S. Pine	5/8"	1"	1-3/8"	No
		6063-T5 Alum.	3/8"	5/8"	.050"	No
		A36 Steel	3/8"	5/8"	.050"	No
		A653 Stud, Gr. 33	3/8"	5/8"	.035", 20 Ga.	No
C	1/4" steel Ultracon	2.85k Concrete	2-1/2"	4"	1-3/8"	No
		2.85k Concrete	1"	4"	1-3/4"	No
		Hollow Block	2-1/2"	5"	1-1/4"	No
	#12, steel SMS (G5) or #12, 410 SS SMS	S. Pine	5/8"	1"	1-3/8"	Yes
		6063-T5 Alum.	3/8"	5/8"	1/16"	Yes
		A36 Steel	3/8"	5/8"	.050"	Yes
		A653 Stud, Gr. 33	3/8"	5/8"	.045", 18 Ga.	Yes
D	#14, steel SMS (G5) or #14, 410 SS SMS	S. Pine	5/8"	1"	1-3/8"	Yes
		6063-T5 Alum.	3/8"	5/8"	1/16"	Yes
		A36 Steel	3/8"	5/8"	.050"	Yes
		A653 Stud, Gr. 33	3/8"	5/8"	.045", 18 Ga.	Yes
	1/4" steel Ultracon	2.85k Concrete	1"	4"	1-3/4"	Yes
		2.85k Concrete	2-1/2"	4"	1-3/8"	Yes
		Hollow Block	2-1/2"	5"	1-1/4"	Yes
		Filled Block	2-1/2"	4"	1-3/4"	Yes
	1/4" 410 SS CreteFlex	3.35k Concrete	1"	5"	1-3/4"	No
		Hollow Block	2-1/2"	5"	1-1/4"	No
	5/16" steel Ultracon	3.5k Concrete	1-1/4"	5"	1-3/4"	No
		Hollow Block	3-1/8"	5"	1-1/4"	No
		Filled Block	2-1/2"	5"	1-3/4"	No

NOTES:
1) ANCHOR MUST EXTEND A MIMIMUM OF 3 THREADS BEYOND ANY METAL SUBSTRATE.
2) ANCHORS MAY BE HEXHEAD, PANHEAD OR FLATHEAD.

EXAMPLE 1: FOR WINDOW COMBINATION SHOWN BELOW; 7/16" ANNEALED SGP LAMI. GLASS, 1/4" MASONRY ANCHORS INTO CONCRETE, +70/-80 PSF DP REQUIRED, NO ANCHOR PLATE

AWNING ANCHORS:
A) FROM TABLE 9, ANCHORS C & D ALLOW A DP OF +70/-90.

B) FOR THE JAMB, FROM TABLE 3, ANCHOR TYPE C HAS THE ANCHOR AND SUBSTRATE DESIRED AND DOES NOT REQUIRE THE ANCHOR PLATE.

C) FROM TABLE 2, 4 ANCHORS ARE REQUIRED IN EACH JAMB.

C) SIMILARLY, 2 ANCHORS ARE REQUIRED IN THE HEAD & SILL.

D) DISTRIBUTE ANCHORS FOLLOWING GUIDELINES FROM ELEVATION ON SHEET 1.

E) PER RULES ON SHEETS 2 & 3, INSTALL 1 ADDITIONAL ANCHOR ON THE FRAME ASSEMBLY TUBE SIDE OF THE AWNING (HEAD & SILL).

FIXED CASEMENT ANCHORS (**SEE SEPERATE NOA**):
A) FROM TABLE 9, ANCHORS C & D ALLOW A DP OF +70/-83.1.

B) FOR THE JAMB, FROM TABLE 3, ANCHOR TYPE C HAS THE ANCHOR AND SUBSTRATE DESIRED AND DOES NOT REQUIRE THE ANCHOR PLATE.

C) FROM TABLE 2B, 5 ANCHORS ARE REQUIRED IN EACH JAMB.

C) SIMILARLY, 3 ANCHORS ARE REQUIRED IN THE HEAD & SILL.

D) DISTRIBUTE ANCHORS FOLLOWING GUIDELINES FROM ELEVATION ON SHEET 1.

E) PER RULES ON SHEET 2, INSTALL 1 ADDITIONAL ANCHOR ON THE FRAME ASSEMBLY TUBE SIDE OF THE FIXED CASEMENT (HEAD & SILL).

TABLE 4:

Head Snubber Locations

Glass Type:	
PVB (Types 1, 3 & 4)	SGP (Types 2, 5 & 6)
None Required	20" max. from each end & 20" max O.C.

SAMPLE CONFIGURATIONS:

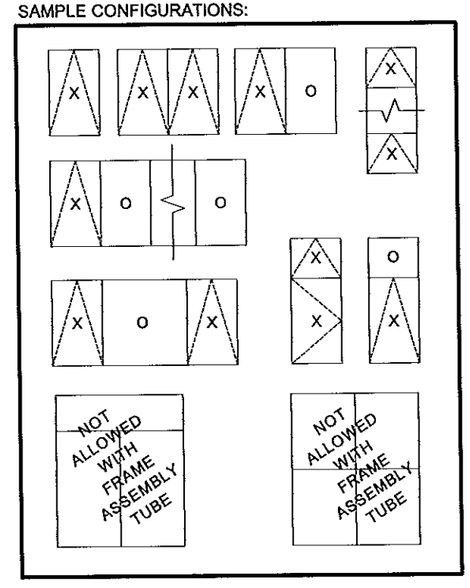

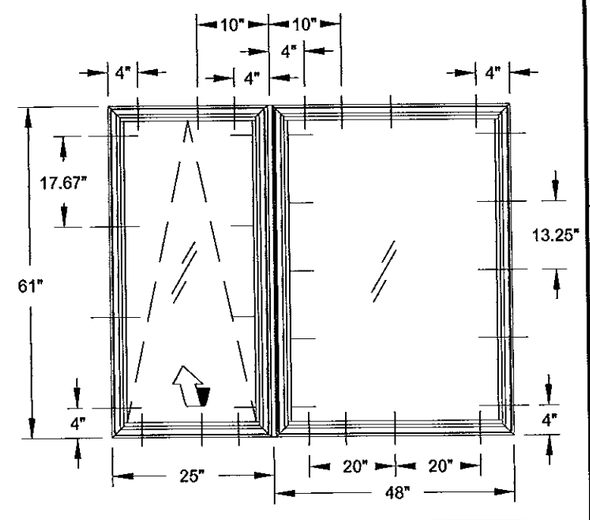

Approved as complying with the Florida Building Code
Date April 11, 2013
NOA# 12-1212.04
Miami Dade Product Control
By

Revised By:
Revision:
Rev:

Drawn By: J ROSOWSKI
Date: 08/08/12
Description: ANCHOR TYPE AND QUANTITY
Title: AWNING WINDOW DETAILS - LM & SM
Drawing No. MD-AW740LM
Series/Model: AW-740
Scale: NTS
Sheet: 4 OF 10

1070 TECHNOLOGY DRIVE
N. VENICE, FL 34275
P.O. BOX 1529
NOKOMIS, FL 34274
CERT. OF AUTH. #29296

ANTHONY LYNN MILLER
LICENSE
No. 58705
3/18/13
STATE OF FLORIDA
PROFESSIONAL ENGINEER
A. LYNN MILLER, P.E.
P.E.# 58705

FOR GLASS TYPES:

1) 5/16" LAMI (1/8 AN - .090" PVB - 1/8 AN)

TABLE 5:

Window Height	Design Pressure (psf) for Single Windows, All Anchor Groups									
	Window Width									
	under 23"	25-15/16"	27-7/8"	30-3/4"	32"	34"	37"	46"	53-1/8"	60"
under 23"	+70/- 90	+70/- 90	+70/- 90	+70/- 90	+70/- 90	+70/- 90	+70/- 90	+70/- 90	+70/- 90	+70/- 90
25-15/16"	+70/- 90	+70/- 90	+70/- 90	+70/- 90	+70/- 90	+70/- 90	+70/- 90	+70/- 90	+70/- 90	+70/- 90
39"	+70/- 90	+70/- 90	+70/- 90	+70/- 90	+70/- 90	+70/- 90	+70/- 90	+70/- 90	+70/-81.1	+70/-71.2
50-5/8"	+70/- 90	+70/- 90	+70/- 90	+70/- 90	+70/- 90	+70/- 90	+70/-89.2	+70/-77.9		
60"	+70/- 90	+70/- 90	+70/- 90	+70/-86.5	+70/-83.7	+70/-79.6	+70/-74.3			
63"	+70/- 90	+70/- 90	+70/- 90	+70/-82.3	+70/-79.4	+70/-75.6	+70/- 70.1			
67"	+70/- 90	+70/- 90	+70/- 83.5	+70/- 76.3	+70/- 73.4	+/- 69.4				
72"	+70/- 90	+70/-87.2	+70/- 77.4	+/- 69.3	+/- 65.4					
76"	+70/- 90	+70/- 84.6	+70/- 75.2	+/- 65						
84"	+70/- 90	+70/- 80.4	+70/- 70.8							

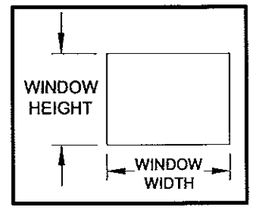

SEE SHEETS 1 & 4 FOR WINDOW ANCHOR LOCATIONS AND QUANTITIES.

TABLE 6:

Window Height	Design Pressure (psf) for Windows Attached to a Vertical Frame Assembly Tube															
	Window Width															
	under 23"				25-15/16"			27-7/8"		30-3/4"	32"	34"	37"	46"	53-1/8"	60"
	Anchor Group				Anchor Group			Anchor Group		Anchor Group	Anchor Group	Anchor Group	Anchor Group	Anchor Group	Anchor Group	Anchor Group
	A	B	C	D	A	B	C & D	A, C & D	B	All	All	All	All	All	All	All
under 23"	+70/-90	+70/-90	+70/-90	+70/-90	+70/-90	+70/-90	+70/-90	+70/-90	+70/-90	+70/-90	+70/-90	+70/-90	+70/-90	+70/-90	+70/-90	+70/-90
25-15/16"	+70/-90	+70/-90	+70/-90	+70/-90	+70/-90	+70/-90	+70/-90	+70/-90	+70/-90	+70/-90	+70/-90	+70/-90	+70/-90	+70/-90	+70/-90	+70/-90
39"	+70/-89.9	+70/-70.5	+70/-90	+70/-90	+70/-79.7	+70/-90	+70/-90	+70/-90	+70/-90	+70/-90	+70/-90	+70/-90	+70/-90	+70/-90	+70/-81.1	+70/-71.2
50-5/8"	+/-69.3	+/-54.3	+70/-90	+70/-90	+/-61.4	+70/-90	+70/-90	+70/-90	+70/-89.6	+70/-90	+70/-90	+70/-90	+70/-89.2	+70/-77.9		
60"	+/-58.5	+/-45.8	+70/-84.7	+70/-90	+/-51.8	+70/-81.2	+70/-90	+70/-90	+70/-75.6	+70/-86.5	+70/-83.7	+70/-79.6	+70/-74.3			
63"	+/-55.7	+/-43.6	+70/-80.7	+70/-89.5	+/-49.3	+70/-77.3	+70/-90	+70/-90	+70/-72	+70/-82.3	+70/-79.4	+70/-75.6	+70/-70.1			

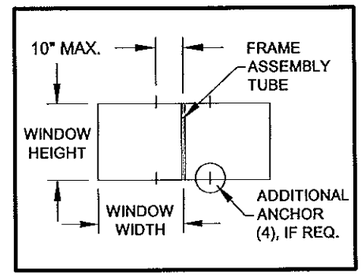

SEE SHEETS 1 & 4 FOR WINDOW ANCHOR LOCATIONS AND QUANTITIES. SEE SHEET 3 FOR ANY ADDITIONAL ANCHORS REQUIRED FOR THE FRAME ASSEMBLY TUBE.

TABLE 7:

Window Height	Design Pressure (psf) for Windows Attached to a Horizontal Frame Assembly Tube																					
	Window Width																					
	under 23"	25-15/16"	27-7/8"	30-3/4"		32"		34"		37"			46"			53-1/8"			60"			
	Anchor Group	Anchor Group	Anchor Group	Anchor Group		Anchor Group		Anchor Group		Anchor Group			Anchor Group			Anchor Group			Anchor Group			
	All	All	All	A, C & D	B	A, C & D	B	A, C & D	B	A	B	C & D	A	B	C & D	A	B	C & D	A	B	C	D
under 23"	+70/-90	+70/-90	+70/-90	+70/-90	+70/-89.4	+70/-90	+70/-85.9	+70/-90	+70/-80.8	+70/-90	+70/-74.3	+70/-90	+70/-76.3	+/-59.7	+70/-90	+/-66	+/-51.7	+70/-90	+/-58.5	+/-45.8	+70/-84.7	+70/-90
25-15/16"	+70/-90	+70/-90	+70/-90	+70/-90	+70/-90	+70/-90	+70/-90	+70/-90	+70/-90	+70/-84	+70/-90	+70/-90	+/-67.6	+70/-90	+70/-90	+/-58.5	+70/-90	+70/-90	+/-51.8	+70/-81.2	+70/-90	+70/-90
39"	+70/-90	+70/-90	+70/-90	+70/-90	+70/-90	+70/-90	+70/-90	+70/-90	+70/-90	+70/-90	+70/-90	+70/-90	+70/-89.9	+70/-88.1	+70/-90	+70/-77.8	+/-61	+70/-81.1	+/-68.9	+/-54	+70/-71.2	+70/-71.2
50-5/8"	+70/-90	+70/-90	+70/-90	+70/-90	+70/-90	+70/-90	+70/-90	+70/-90	+70/-90	+70/-89.2	+70/-89.2	+70/-89.2	+70/-77.9	+70/-77.9	+70/-77.9							
60"	+70/-90	+70/-90	+70/-90	+70/-86.5	+70/-86.5	+70/-83.7	+70/-83.7	+70/-79.6	+70/-79.6	+70/-74.3	+70/-74.3	+70/-74.3										
63"	+70/-90	+70/-90	+70/-90	+70/-82.3	+70/-82.3	+70/-79.4	+70/-79.4	+70/-75.6	+70/-75.6	+70/-70.1	+70/-70.1	+70/-70.1										
67"	+70/-90	+70/-90	+70/-83.5	+70/-76.3	+70/-76.3	+70/-73.4	+70/-73.4	+/-69.4	+/-69.4													
72"	+70/-90	+70/-87.2	+70/-77.4	+/-69.3	+/-69.3	+/-65.4	+/-65.4															
76"	+70/-90	+70/-84.6	+70/-75.2	+/-65	+/-65																	
84"	+70/-90	+70/-80.4	+70/-70.8																			

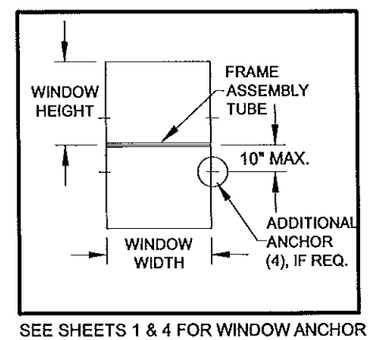

SEE SHEETS 1 & 4 FOR WINDOW ANCHOR LOCATIONS AND QUANTITIES. SEE SHEET 3 FOR ANY ADDITIONAL ANCHORS REQUIRED FOR THE FRAME ASSEMBLY TUBE.

NOTES:
1) SEE SHEET 4 FOR ADDITIONAL SAMPLE CONFIGURATIONS.
2) SEE SHEET 4 FOR SNUBBER REQUIREMENTS.

Approved as complying with the Florida Building Code
Date APRIL 11, 2013
MOA# 12-1218.07
Miami Dade Product Control
By Manuel Perez

Revision:
Revised By:
Date: Date: 08/08/12
Drawn By: J ROSOWSKI
Description: DESIGN PRESSURES PER GLAZING TYPE
Title: AWNING WINDOW DETAILS - LM & SM
Series/Model: AW-740
Scale: NTS
Sheet: 5 OF 10
Drawing No. MD-AW740LM
Rev:

1070 TECHNOLOGY DRIVE
N. VENICE, FL 34275
P.O. BOX 1529
NOKOMIS, FL 34274
CERT. OF AUTH. #29296

ANTHONY LYNN MILLER
LICENSE
No. 58705
3/18/13
STATE OF FLORIDA
PROFESSIONAL ENGINEER

A. LYNN MILLER, P.E.
P.E.# 58705

FOR GLASS TYPES:

2) 7/16" LAMI (3/16" AN - .090" SGP - 3/16" AN)

TABLE 8:

Window Height	Design Pressure (psf) for Single Windows, All Anchor Groups — Window Width: under 23"	25-15/16"	27-7/8"	30-3/4"	32"	34"	37"	46"	53-1/8"	60"
under 23"	+90/-130	+90/-130	+90/-130	+90/-130	+90/-130	+90/-130	+90/-130	+90/-130	+90/-130	+90/-130
25-15/16"	+90/-130	+90/-130	+90/-130	+90/-130	+90/-130	+90/-130	+90/-130	+90/-130	+90/-130	+90/-130
39"	+90/-130	+90/-130	+90/-130	+90/-130	+90/-130	+90/-130	+90/-130	+90/-130	+90/-130	+90/-128.8
50-5/8"	+90/-130	+90/-130	+90/-130	+90/-130	+90/-130	+90/-130	+90/-130	+90/-130		
60"	+90/-130	+90/-130	+90/-130	+90/-130	+90/-130	+90/-130	+90/-130			
63"	+90/-130	+90/-130	+90/-130	+90/-130	+90/-130	+90/-130	+90/-129.6			
67"	+90/-130	+90/-130	+90/-130	+90/-130	+90/-130	+90/-130				
72"	+90/-130	+90/-130	+90/-130	+90/-130	+90/-130					
76"	+90/-130	+90/-130	+90/-130	+90/-130						
84"	+90/-130	+90/-130	+90/-130							

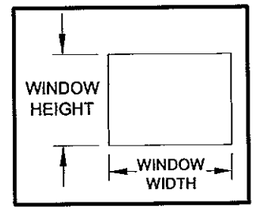

SEE SHEETS 1 & 4 FOR WINDOW ANCHOR LOCATIONS AND QUANTITIES.

TABLE 9:

Window Height	Design Pressure (psf) for Windows Attached to a Vertical Frame Assembly Tube — Window Width: under 23" Anchor Group A	under 23" Anchor Group B	under 23" Anchor Group C	under 23" Anchor Group D	25-15/16" Anchor Group A	25-15/16" Anchor Group B	25-15/16" Anchor Group C & D	27-7/8" Anchor Group A, C & D	27-7/8" Anchor Group B	30-3/4" Anchor Group All	32" Anchor Group All	34" Anchor Group A, C & D	34" Anchor Group B	37" Anchor Group A, C & D	37" Anchor Group B	46" Anchor Group All	53-1/8" Anchor Group All	60" Anchor Group All
under 23"	+70/-90	+70/-90	+70/-90	+70/-90	+70/-90	+70/-90	+70/-90	+70/-90	+70/-90	+70/-90	+70/-90	+70/-90	+70/-90	+70/-90	+70/-90	+70/-90	+70/-90	+70/-90
25-15/16"	+70/-90	+70/-90	+70/-90	+70/-90	+70/-90	+70/-90	+70/-90	+70/-90	+70/-90	+70/-90	+70/-90	+70/-90	+70/-90	+70/-90	+70/-90	+70/-90	+70/-90	+70/-90
39"	+70/-89.9	+70/-70.5	+70/-90	+70/-90	+70/-79.7	+70/-90	+70/-90	+70/-90	+70/-90	+70/-90	+70/-90	+70/-90	+70/-90	+70/-90	+70/-90	+70/-90	+70/-90	+70/-90
50-5/8"	+/-69.3	+/-54.3	+70/-90	+70/-90	+/-61.4	+70/-90	+70/-90	+70/-90	+70/-89.6	+70/-90	+70/-90	+70/-90	+70/-90	+70/-90	+70/-90	+70/-90		
60"	+/-58.5	+/-45.8	+70/-84.7	+70/-90	+/-51.8	+70/-81.2	+70/-90	+70/-90	+70/-75.6	+70/-90	+70/-90	+70/-90	+70/-90	+70/-90	+70/-85.4			
63"	+/-55.7	+/-43.6	+70/-80.7	+70/-89.5	+/-49.3	+70/-77.3	+70/-90	+70/-90	+70/-72	+70/-90	+70/-90	+70/-90	+70/-88.5	+70/-90	+70/-81.3			

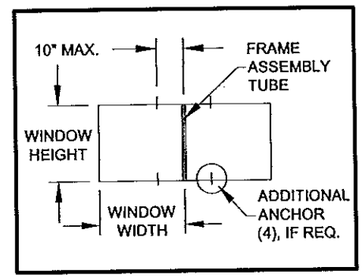

SEE SHEETS 1 & 4 FOR WINDOW ANCHOR LOCATIONS AND QUANTITIES. SEE SHEET 3 FOR ANY ADDITIONAL ANCHORS REQUIRED FOR THE FRAME ASSEMBLY TUBE.

TABLE 10:

Window Height	Design Pressure (psf) for Windows Attached to a Horizontal Frame Assembly Tube — Window Width: under 23" Anchor Group All	25-15/16" Anchor Group All	27-7/8" Anchor Group All	30-3/4" Anchor Group A, C & D	30-3/4" Anchor Group B	32" Anchor Group A, C & D	32" Anchor Group B	34" Anchor Group A, C & D	34" Anchor Group B	37" Anchor Group A	37" Anchor Group B	37" Anchor Group C & D	46" Anchor Group A	46" Anchor Group B	46" Anchor Group C & D	53-1/8" Anchor Group A	53-1/8" Anchor Group B	53-1/8" Anchor Group C & D	60" Anchor Group A	60" Anchor Group B	60" Anchor Group C	60" Anchor Group D
under 23"	+70/-90	+70/-90	+70/-90	+70/-90	+70/-89.4	+70/-90	+70/-85.9	+70/-90	+70/-80.8	+70/-90	+70/-74.3	+70/-90	+70/-76.3	+/-59.7	+70/-90	+/-66	+/-51.7	+70/-90	+/-58.5	+/-45.8	+70/-84.7	+70/-90
25-15/16"	+70/-90	+70/-90	+70/-90	+70/-90	+70/-90	+70/-90	+70/-90	+70/-90	+70/-90	+70/-84	+70/-90	+70/-90	+/-67.6	+70/-90	+70/-90	+/-58.5	+70/-90	+70/-90	+/-51.8	+70/-81.2	+70/-90	+70/-90
39"	+70/-90	+70/-90	+70/-90	+70/-90	+70/-90	+70/-90	+70/-90	+70/-90	+70/-90	+70/-90	+70/-90	+70/-90	+70/-90	+70/-90	+70/-90	+70/-90	+70/-90	+70/-90	+70/-86.2	+70/-81	+70/-90	+70/-90
50-5/8"	+70/-90	+70/-90	+70/-90	+70/-90	+70/-90	+70/-90	+70/-90	+70/-90	+70/-90	+70/-90	+70/-90	+70/-90	+70/-90	+70/-90	+70/-90							
60"	+70/-90	+70/-90	+70/-90	+70/-90	+70/-90	+70/-90	+70/-90	+70/-90	+70/-90	+70/-90	+70/-90	+70/-90										
63"	+70/-90	+70/-90	+70/-90	+70/-90	+70/-90	+70/-90	+70/-90	+70/-90	+70/-90	+70/-90	+70/-90	+70/-90										
67"	+70/-90	+70/-90	+70/-90	+70/-90	+70/-90	+70/-90	+70/-90	+70/-90	+70/-90													
72"	+70/-90	+70/-90	+70/-90	+70/-90	+70/-90	+70/-90	+70/-90															
76"	+70/-90	+70/-90	+70/-90	+70/-90	+70/-90																	
84"	+70/-90	+70/-90	+70/-90																			

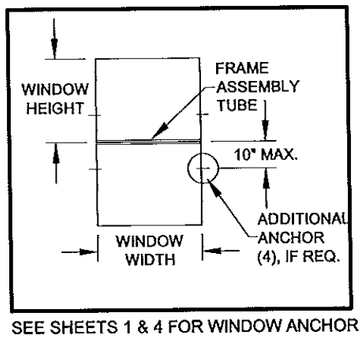

SEE SHEETS 1 & 4 FOR WINDOW ANCHOR LOCATIONS AND QUANTITIES. SEE SHEET 3 FOR ANY ADDITIONAL ANCHORS REQUIRED FOR THE FRAME ASSEMBLY TUBE.

NOTES:
1) SEE SHEET 4 FOR ADDITIONAL SAMPLE CONFIGURATIONS.
2) SEE SHEET 4 FOR SNUBBER REQUIREMENTS.

Approved as complying with the Florida Building Code
Date April 11, 2013
NOA# 12-1218.07
Miami Dade Product Control
By Manuel Zero

Revised By:
Revision:
Date:
Drawn By: J ROSOWSKI
Date: 08/08/12
Description: DESIGN PRESSURES PER GLAZING TYPE
Title: AWNING WINDOW DETAILS - LM & SM
Series/Model: AW-740
Scale: NTS
Sheet: 6 OF 10
Drawing No. MD-AW740LM
Rev:

1070 TECHNOLOGY DRIVE
N. VENICE, FL 34275
P.O. BOX 1529
NOKOMIS, FL 34274
CERT. OF AUTH. #29296

ANTHONY LYNN MILLER
LICENSE
No. 58705
3/18/13
STATE OF FLORIDA
PROFESSIONAL ENGINEER
A. LYNN MILLER, P.E.
P.E.# 58705

FOR GLASS TYPES:

3) 7/8" LAMI. IG: (1/8" AN - 7/16" AIR - 1/8" AN - .090" PVB - 1/8" AN)

TABLE 11:

Window Height	Design Pressure (psf) for Single Windows, All Anchor Groups — Window Width: under 23"	25-15/16"	27-7/8"	30-3/4"	32"	34"	37"	46"	53-1/8"	60"
under 23"	+70/- 90	+70/- 90	+70/- 90	+70/- 90	+70/- 90	+70/- 90	+70/- 90	+70/- 90	+70/- 90	+70/- 90
25-15/16"	+70/- 90	+70/- 90	+70/- 90	+70/- 90	+70/- 90	+70/- 90	+70/- 90	+70/- 90	+70/- 90	+70/- 90
39"	+70/- 90	+70/- 90	+70/- 90	+70/- 90	+70/- 90	+70/- 90	+70/- 90	+70/- 90	+70/-83.2	+70/-73.1
50-5/8"	+70/- 90	+70/- 90	+70/- 90	+70/- 90	+70/- 90	+70/- 90	+70/- 90	+70/-80		
60"	+70/- 90	+70/- 90	+70/- 90	+70/-88.8	+70/-85.8	+70/-81.7	+70/-76.2			
63"	+70/- 90	+70/- 90	+70/- 90	+70/-84.4	+70/-81.5	+70/-77.5	+70/-71.9			
67"	+70/- 90	+70/- 90	+70/-85.6	+70/-78.3	+70/- 75.3	+70/- 71.2				
72"	+70/- 90	+70/-89.5	+70/- 79.4	+70/- 71.1	+/- 67.1					
76"	+70/- 90	+70/-86.8	+70/- 77.2	+/- 66.6						
84"	+70/- 90	+70/- 82.5	+70/- 72.7							

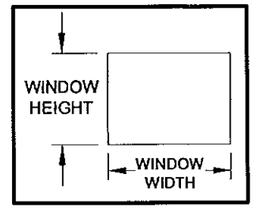

SEE SHEETS 1 & 4 FOR WINDOW ANCHOR LOCATIONS AND QUANTITIES.

TABLE 12:

Window Height	Design Pressure (psf) for Windows Attached to a Vertical Frame Assembly Tube — Window Width: under 23" Anchor Group A	under 23" Anchor Group B	under 23" Anchor Group C	under 23" Anchor Group D	25-15/16" Anchor Group A	25-15/16" Anchor Group B	25-15/16" Anchor Group C & D	27-7/8" Anchor Group A, C & D	27-7/8" Anchor Group B	30-3/4" Anchor Group All	32" Anchor Group All	34" Anchor Group All	37" Anchor Group All	46" Anchor Group All	53-1/8" Anchor Group All	60" Anchor Group All
under 23"	+70/-90	+70/-90	+70/-90	+70/-90	+70/-90	+70/-90	+70/-90	+70/-90	+70/-90	+70/-90	+70/-90	+70/-90	+70/-90	+70/-90	+70/-90	+70/-90
25-15/16"	+70/-90	+70/-90	+70/-90	+70/-90	+70/-90	+70/-90	+70/-90	+70/-90	+70/-90	+70/-90	+70/-90	+70/-90	+70/-90	+70/-90	+70/-90	+70/-90
39"	+70/-89.9	+70/-70.5	+70/-90	+70/-90	+70/-79.7	+70/-90	+70/-90	+70/-90	+70/-90	+70/-90	+70/-90	+70/-90	+70/-90	+70/-90	+70/-83.2	+70/-73.1
50-5/8"	+/-69.3	+/-54.3	+70/-90	+70/-90	+/-61.4	+70/-90	+70/-90	+70/-90	+70/-89.6	+70/-90	+70/-90	+70/-90	+70/-90	+70/-80		
60"	+/-58.5	+/-45.8	+70/-84.7	+70/-90	+/-51.8	+70/-81.2	+70/-90	+70/-90	+70/-75.6	+70/-88.8	+70/-85.8	+70/-81.7	+70/-76.2			
63"	+/-55.7	+/-43.6	+70/-80.7	+70/-89.5	+/-49.3	+70/-77.3	+70/-90	+70/-90	+70/-72	+70/-84.4	+70/-81.5	+70/-77.5	+70/-71.9			

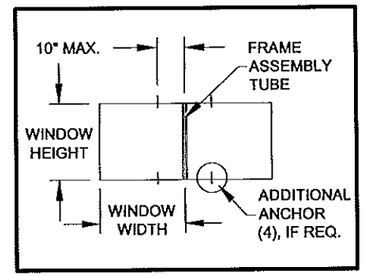

SEE SHEETS 1 & 4 FOR WINDOW ANCHOR LOCATIONS AND QUANTITIES. SEE SHEET 3 FOR ANY ADDITIONAL ANCHORS REQUIRED FOR THE FRAME ASSEMBLY TUBE.

TABLE 13:

Window Height	Design Pressure (psf) for Windows Attached to a Horizontal Frame Assembly Tube — Window Width: under 23" Anchor Group All	25-15/16" Anchor Group All	27-7/8" Anchor Group All	30-3/4" Anchor Group A, C & D	30-3/4" Anchor Group B	32" Anchor Group A, C & D	32" Anchor Group B	34" Anchor Group A, C & D	34" Anchor Group B	37" Anchor Group A	37" Anchor Group B	37" Anchor Group C & D	46" Anchor Group A	46" Anchor Group B	46" Anchor Group C & D	53-1/8" Anchor Group A	53-1/8" Anchor Group B	53-1/8" Anchor Group C & D	60" Anchor Group A	60" Anchor Group B	60" Anchor Group C	60" Anchor Group D
under 23"	+70/-90	+70/-90	+70/-90	+70/-90	+70/-89.4	+70/-90	+70/-85.9	+70/-90	+70/-80.8	+70/-90	+70/-74.3	+70/-90	+70/-76.3	+/-59.7	+70/-90	+/-66	+/-51.7	+70/-90	+/-58.5	+/-45.8	+70/-84.7	+70/-90
25-15/16"	+70/-90	+70/-90	+70/-90	+70/-90	+70/-90	+70/-90	+70/-90	+70/-90	+70/-90	+70/-84	+70/-90	+70/-90	+/-67.6	+70/-90	+70/-90	+/-58.5	+70/-90	+70/-90	+/-51.8	+70/-81.2	+70/-90	+70/-90
39"	+70/-90	+70/-90	+70/-90	+70/-90	+70/-90	+70/-90	+70/-90	+70/-90	+70/-90	+70/-90	+70/-90	+70/-90	+70/-89.9	+70/-88.1	+70/-90	+70/-77.8	+/-61	+70/-83.2	+/-68.9	+/-54	+70/-73.1	+70/-73.1
50-5/8"	+70/-90	+70/-90	+70/-90	+70/-90	+70/-90	+70/-90	+70/-90	+70/-90	+70/-90	+70/-90	+70/-90	+70/-90	+70/-80	+70/-80	+70/-80							
60"	+70/-90	+70/-90	+70/-90	+70/-88.8	+70/-88.8	+70/-85.8	+70/-85.8	+70/-81.7	+70/-81.7	+70/-76.2	+70/-76.2	+70/-76.2										
63"	+70/-90	+70/-90	+70/-90	+70/-84.4	+70/-84.4	+70/-81.5	+70/-81.5	+70/-77.5	+70/-77.5	+70/-71.9	+70/-71.9	+70/-71.9										
67"	+70/-90	+70/-90	+70/-85.6	+70/-78.3	+70/-78.3	+70/-75.3	+70/-75.3	+70/-71.2	+70/-71.2													
72"	+70/-90	+70/-89.5	+70/-79.4	+70/-71.1	+70/-71.1	+/-67.1	+/-67.1															
76"	+70/-90	+70/-86.8	+70/-77.2	+/-66.6	+/-66.6																	
84"	+70/-90	+70/-82.5	+70/-72.7																			

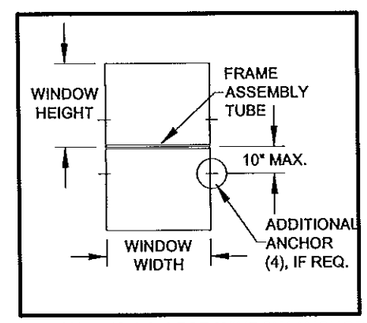

SEE SHEETS 1 & 4 FOR WINDOW ANCHOR LOCATIONS AND QUANTITIES. SEE SHEET 3 FOR ANY ADDITIONAL ANCHORS REQUIRED FOR THE FRAME ASSEMBLY TUBE.

NOTES:
1) SEE SHEET 4 FOR ADDITIONAL SAMPLE CONFIGURATIONS.
2) SEE SHEET 4 FOR SNUBBER REQUIREMENTS.

Approved as complying with the Florida Building Code
Date 4-8-11 2013
NOA# 12-1215.04
Miami Dade Product Control
By Manuel Perez

Revision:
Revised By:
Date:
Drawn By: J ROSOWSKI
Date: 08/08/12
Description: DESIGN PRESSURES PER GLAZING TYPE
Title: AWNING WINDOW DETAILS - LM & SM
Series/Model: AW-740
Rev:
Drawing No. MD-AW740LM
Sheet: 7 OF 10
Scale: NTS

1070 TECHNOLOGY DRIVE
N. VENICE, FL 34275
P.O. BOX 1529
NOKOMIS, FL 34274
CERT. OF AUTH. #29296

ANTHONY LYNN MILLER
LICENSE
No. 58705
3/18/13
STATE OF FLORIDA
PROFESSIONAL ENGINEER
A. LYNN MILLER, P.E.
P.E.# 58705

FOR GLASS TYPES:

4) 7/8" LAMI. IG: (1/8" T - 7/16" AIR - 1/8" AN - .090" PVB - 1/8" AN)

TABLE 14:

Window Height	Design Pressure (psf) for Single Windows, All Anchor Groups									
	Window Width									
	under 23"	25-15/16"	27-7/8"	30-3/4"	32"	34"	37"	46"	53-1/8"	60"
under 23"	+70/-90	+70/-90	+70/-90	+70/-90	+70/-90	+70/-90	+70/-90	+70/-90	+70/-90	+70/-90
25-15/16"	+70/-90	+70/-90	+70/-90	+70/-90	+70/-90	+70/-90	+70/-90	+70/-90	+70/-90	+70/-90
39"	+70/-90	+70/-90	+70/-90	+70/-90	+70/-90	+70/-90	+70/-90	+70/-90	+70/-90	+70/-81.2
50-5/8"	+70/-90	+70/-90	+70/-90	+70/-90	+70/-90	+70/-90	+70/-90	+70/-88.8		
60"	+70/-90	+70/-90	+70/-90	+70/-90	+70/-90	+70/-90	+70/-84.6			
63"	+70/-90	+70/-90	+70/-90	+70/-90	+70/-90	+70/-86.1	+70/-79.9			
67"	+70/-90	+70/-90	+70/-90	+70/-87	+70/-83.6	+70/-79.1				
72"	+70/-90	+70/-90	+70/-88.2	+70/-79	+70/-74.6					
76"	+70/-90	+70/-90	+70/-85.8	+70/- 74						
84"	+70/-90	+70/-90	+70/-80.8							

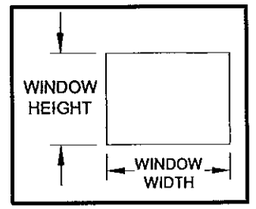

SEE SHEETS 1 & 4 FOR WINDOW ANCHOR LOCATIONS AND QUANTITIES.

TABLE 15:

Window Height	Design Pressure (psf) for Windows Attached to a Vertical Frame Assembly Tube																	
	Window Width																	
	under 23"				25-15/16"			27-7/8"		30-3/4"	32"	34"	37"	46"		53-1/8"	60"
	Anchor Group				Anchor Group			Anchor Group		Anchor Group	Anchor Group	Anchor Group	Anchor Group	Anchor Group		Anchor Group	Anchor Group
	A	B	C	D	A	B	C & D	A, C & D	B	All	All	All	All	A, C & D	B	All	All
under 23"	+70/-90	+70/-90	+70/-90	+70/-90	+70/-90	+70/-90	+70/-90	+70/-90	+70/-90	+70/-90	+70/-90	+70/-90	+70/-90	+70/-90	+70/-90	+70/-90	+70/-90
25-15/16"	+70/-90	+70/-90	+70/-90	+70/-90	+70/-90	+70/-90	+70/-90	+70/-90	+70/-90	+70/-90	+70/-90	+70/-90	+70/-90	+70/-90	+70/-90	+70/-90	+70/-90
39"	+70/-89.9	+70/-70.5	+70/-90	+70/-90	+70/-79.7	+70/-90	+70/-90	+70/-90	+70/-90	+70/-90	+70/-90	+70/-90	+70/-90	+70/-90	+70/-90	+70/-90	+70/-81.2
50-5/8"	+/-69.3	+/-54.3	+70/-90	+70/-90	+/-61.4	+70/-90	+70/-90	+70/-90	+70/-89.6	+70/-90	+70/-90	+70/-90	+70/-90	+70/-88.8	+70/-81.4		
60"	+/-58.5	+/-45.8	+70/-84.7	+70/-90	+/-51.8	+70/-81.2	+70/-90	+70/-90	+70/-75.6	+70/-90	+70/-90	+70/-90	+70/-84.6				
63"	+/-55.7	+/-43.6	+70/-80.7	+70/-89.5	+/-49.3	+70/-77.3	+70/-90	+70/-90	+70/-72	+70/-90	+70/-90	+70/-86.1	+70/-79.9				

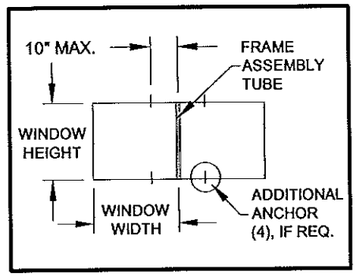

SEE SHEETS 1 & 4 FOR WINDOW ANCHOR LOCATIONS AND QUANTITIES. SEE SHEET 3 FOR ANY ADDITIONAL ANCHORS REQUIRED FOR THE FRAME ASSEMBLY TUBE.

TABLE 16:

Window Height	Design Pressure (psf) for Windows Attached to a Horizontal Frame Assembly Tube																				
	Window Width																				
	under 23"	25-15/16"	27-7/8"	30-3/4"		32"		34"		37"			46"			53-1/8"			60"		
	Anchor Group	Anchor Group	Anchor Group	Anchor Group		Anchor Group		Anchor Group		Anchor Group			Anchor Group			Anchor Group			Anchor Group		
	All	All	All	A, C & D	B	A, C & D	B	A, C & D	B	A	B	C & D	A	B	C & D	A	B	C & D	A	B	C & D
under 23"	+70/-90	+70/-90	+70/-90	+70/-90	+70/-89.4	+70/-90	+70/-85.9	+70/-90	+70/-80.8	+70/-90	+70/-74.3	+70/-90	+70/-76.3	+/-59.7	+70/-90	+/-66	+/-51.7	+70/-90	+/-58.5	+/-45.8	+70/-84.7
25-15/16"	+70/-90	+70/-90	+70/-90	+70/-90	+70/-90	+70/-90	+70/-90	+70/-90	+70/-90	+70/-84	+70/-90	+70/-90	+/-67.6	+70/-90	+70/-90	+/-58.5	+70/-90	+70/-90	+/-51.8	+70/-81.2	+70/-90
39"	+70/-90	+70/-90	+70/-90	+70/-90	+70/-90	+70/-90	+70/-90	+70/-90	+70/-90	+70/-90	+70/-90	+70/-90	+70/-89.9	+70/-88.1	+70/-90	+70/-77.8	+70/-76.2	+70/-90	+/-68.9	+/-54	+70/-81.2
50-5/8"	+70/-90	+70/-90	+70/-90	+70/-90	+70/-90	+70/-90	+70/-90	+70/-90	+70/-90	+70/-90	+70/-90	+70/-90	+70/-88.8	+70/-81.4	+70/-88.8						
60"	+70/-90	+70/-90	+70/-90	+70/-90	+70/-90	+70/-90	+70/-90	+70/-90	+70/-90	+70/-84.6	+70/-84.6	+70/-84.6									
63"	+70/-90	+70/-90	+70/-90	+70/-90	+70/-90	+70/-90	+70/-90	+70/-86.1	+70/-86.1	+70/-79.9	+70/-79.9	+70/-79.9									
67"	+70/-90	+70/-90	+70/-90	+70/-87	+70/-87	+70/-83.6	+70/-83.6	+70/-79.1	+70/-79.1												
72"	+70/-90	+70/-90	+70/-88.2	+70/-79	+70/-79	+70/-74.6	+70/-74.6														
76"	+70/-90	+70/-90	+70/-85.8	+70/-74	+70/-74																
84"	+70/-90	+70/-90	+70/-80.8																		

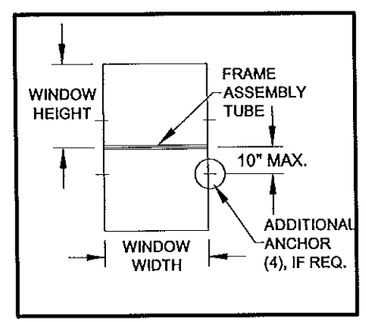

SEE SHEETS 1 & 4 FOR WINDOW ANCHOR LOCATIONS AND QUANTITIES. SEE SHEET 3 FOR ANY ADDITIONAL ANCHORS REQUIRED FOR THE FRAME ASSEMBLY TUBE.

NOTES:
1) SEE SHEET 4 FOR ADDITIONAL SAMPLE CONFIGURATIONS.
2) SEE SHEET 4 FOR SNUBBER REQUIREMENTS.

Approved as complying with the Florida Building Code
Date APRIL 11, 2013
NOA# 12-1218.07
Miami Dade Product Control
By Manuel Perez

Revision:
Revised By:
Date:
Drawn By: J ROSOWSKI
Date: 08/08/12
Description: DESIGN PRESSURES PER GLAZING TYPE
Title: AWNING WINDOW DETAILS - LM & SM
Series/Model: AW-740
Scale: NTS
Sheet: 8 OF 10
Drawing No. MD-AW740LM
Rev:

1070 TECHNOLOGY DRIVE
N. VENICE, FL 34275
P.O. BOX 1529
NOKOMIS, FL 34274
CERT. OF AUTH. #29296

ANTHONY LYNN MILLER
LICENSE
No. 58705
3/18/13
STATE OF FLORIDA
PROFESSIONAL ENGINEER

A. LYNN MILLER, P.E.
P.E.# 58705

13,15,16

FOR GLASS TYPES:

5) 7/8" LAMI. IG: (3/16" AN - 1/4" AIR - 3/16" AN - .090" SGP - 3/16" AN)
6) 7/8" LAMI. IG: (3/16" T - 1/4" AIR - 3/16" AN - .090" SGP - 3/16" AN)

Approved as complying with the Florida Building Code
Date Apr. 11, 2013
NOA# 12-1218.01
Miami Dade Product Control
By Manuel Perez

TABLE 17:

Window Height	Design Pressure (psf) for Single Windows, All Anchor Groups — Window Width: under 23"	25-15/16"	27-7/8"	30-3/4"	32"	34"	37"	46"	53-1/8"	60"
under 23"	+90/-130	+90/-130	+90/-130	+90/-130	+90/-130	+90/-130	+90/-130	+90/-130	+90/-130	+90/-130
25-15/16"	+90/-130	+90/-130	+90/-130	+90/-130	+90/-130	+90/-130	+90/-130	+90/-130	+90/-130	+90/-130
39"	+90/-130	+90/-130	+90/-130	+90/-130	+90/-130	+90/-130	+90/-130	+90/-130	+90/-130	+90/-130
50-5/8"	+90/-130	+90/-130	+90/-130	+90/-130	+90/-130	+90/-130	+90/-130	+90/-130		
60"	+90/-130	+90/-130	+90/-130	+90/-130	+90/-130	+90/-130	+90/-130			
63"	+90/-130	+90/-130	+90/-130	+90/-130	+90/-130	+90/-130	+90/-130			
67"	+90/-130	+90/-130	+90/-130	+90/-130	+90/-130	+90/-130				
72"	+90/-130	+90/-130	+90/-130	+90/-130	+90/-130					
76"	+90/-130	+90/-130	+90/-130	+90/-130						
84"	+90/-130	+90/-130	+90/-130							

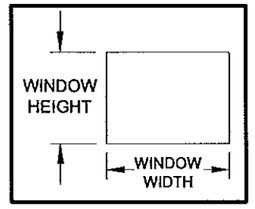

SEE SHEETS 1 & 4 FOR WINDOW ANCHOR LOCATIONS AND QUANTITIES.

TABLE 18:

Window Height	Design Pressure (psf) for Windows Attached to a Vertical Frame Assembly Tube — Window Width: under 23" Anchor Group A	under 23" Anchor Group B	under 23" Anchor Group C	under 23" Anchor Group D	25-15/16" Anchor Group A	25-15/16" Anchor Group B	25-15/16" Anchor Group C & D	27-7/8" Anchor Group A, C & D	27-7/8" Anchor Group B	30-3/4" Anchor Group All	32" Anchor Group All	34" Anchor Group A, C & D	34" Anchor Group B	37" Anchor Group A, C & D	37" Anchor Group B	46" Anchor Group All	53-1/8" Anchor Group All	60" Anchor Group All
under 23"	+70/-90	+70/-90	+70/-90	+70/-90	+70/-90	+70/-90	+70/-90	+70/-90	+70/-90	+70/-90	+70/-90	+70/-90	+70/-90	+70/-90	+70/-90	+70/-90	+70/-90	+70/-90
25-15/16"	+70/-90	+70/-90	+70/-90	+70/-90	+70/-90	+70/-90	+70/-90	+70/-90	+70/-90	+70/-90	+70/-90	+70/-90	+70/-90	+70/-90	+70/-90	+70/-90	+70/-90	+70/-90
39"	+70/-89.9	+70/-70.5	+70/-90	+70/-90	+70/-79.7	+70/-90	+70/-90	+70/-90	+70/-90	+70/-90	+70/-90	+70/-90	+70/-90	+70/-90	+70/-90	+70/-90	+70/-90	+70/-90
50-5/8"	+/-69.3	+/-54.3	+70/-90	+70/-90	+/-61.4	+70/-90	+70/-90	+70/-90	+70/-89.6	+70/-90	+70/-90	+70/-90	+70/-90	+70/-90	+70/-90	+70/-90		
60"	+/-58.5	+/-45.8	+70/-84.7	+70/-90	+/-51.8	+70/-81.2	+70/-90	+70/-90	+70/-75.6	+70/-90	+70/-90	+70/-90	+70/-90	+70/-90	+70/-85.4			
63"	+/-55.7	+/-43.6	+70/-80.7	+70/-89.5	+/-49.3	+70/-77.3	+70/-90	+70/-90	+70/-72	+70/-90	+70/-90	+70/-90	+70/-88.5	+70/-90	+70/-81.3			

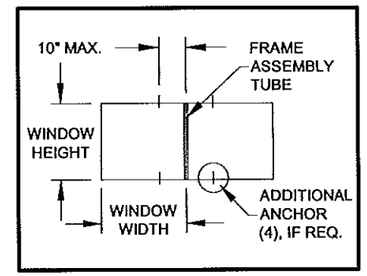

SEE SHEETS 1 & 4 FOR WINDOW ANCHOR LOCATIONS AND QUANTITIES. SEE SHEET 3 FOR ANY ADDITIONAL ANCHORS REQUIRED FOR THE FRAME ASSEMBLY TUBE.

TABLE 19:

Window Height	Design Pressure (psf) for Windows Attached to a Horizontal Frame Assembly Tube — Window Width: under 23" Anchor Group All	25-15/16" Anchor Group All	27-7/8" Anchor Group All	30-3/4" Anchor Group A, C & D	30-3/4" Anchor Group B	32" Anchor Group A, C & D	32" Anchor Group B	34" Anchor Group A, C & D	34" Anchor Group B	37" Anchor Group A	37" Anchor Group B	37" Anchor Group C & D	46" Anchor Group A	46" Anchor Group B	46" Anchor Group C & D	53-1/8" Anchor Group A	53-1/8" Anchor Group B	53-1/8" Anchor Group C & D	60" Anchor Group A	60" Anchor Group B	60" Anchor Group C	60" Anchor Group D
under 23"	+70/-90	+70/-90	+70/-90	+70/-90	+70/-89.4	+70/-90	+70/-85.9	+70/-90	+70/-80.8	+70/-90	+70/-74.3	+70/-90	+70/-76.3	+/-59.7	+70/-90	+/-66	+/-51.7	+70/-90	+/-58.5	+/-45.8	+70/-84.7	+70/-90
25-15/16"	+70/-90	+70/-90	+70/-90	+70/-90	+70/-90	+70/-90	+70/-90	+70/-90	+70/-90	+70/-84	+70/-90	+70/-90	+/-67.6	+70/-90	+70/-90	+/-58.5	+70/-90	+70/-90	+/-51.8	+70/-81.2	+70/-90	+70/-90
39"	+70/-90	+70/-90	+70/-90	+70/-90	+70/-90	+70/-90	+70/-90	+70/-90	+70/-90	+70/-90	+70/-90	+70/-90	+70/-90	+70/-90	+70/-90	+70/-90	+70/-90	+70/-90	+70/-86.2	+70/-81	+70/-90	+70/-90
50-5/8"	+70/-90	+70/-90	+70/-90	+70/-90	+70/-90	+70/-90	+70/-90	+70/-90	+70/-90	+70/-90	+70/-90	+70/-90	+70/-90	+70/-90	+70/-90							
60"	+70/-90	+70/-90	+70/-90	+70/-90	+70/-90	+70/-90	+70/-90	+70/-90	+70/-90	+70/-90	+70/-90	+70/-90										
63"	+70/-90	+70/-90	+70/-90	+70/-90	+70/-90	+70/-90	+70/-90	+70/-90	+70/-90	+70/-90	+70/-90	+70/-90										
67"	+70/-90	+70/-90	+70/-90	+70/-90	+70/-90	+70/-90	+70/-90	+70/-90	+70/-90													
72"	+70/-90	+70/-90	+70/-90	+70/-90	+70/-90	+70/-90	+70/-90															
76"	+70/-90	+70/-90	+70/-90	+70/-90	+70/-90																	
84"	+70/-90	+70/-90	+70/-90																			

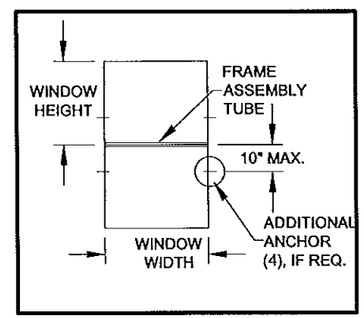

SEE SHEETS 1 & 4 FOR WINDOW ANCHOR LOCATIONS AND QUANTITIES. SEE SHEET 3 FOR ANY ADDITIONAL ANCHORS REQUIRED FOR THE FRAME ASSEMBLY TUBE.

NOTES:
1) SEE SHEET 4 FOR ADDITIONAL SAMPLE CONFIGURATIONS.
2) SEE SHEET 4 FOR SNUBBER REQUIREMENTS.

Revised By: | Revision: | Date:

Drawn By: J ROSOWSKI | Date: 08/08/12

Description: DESIGN PRESSURES PER GLAZING TYPE

Title: AWNING WINDOW DETAILS - LM & SM

Series/Model: AW-740 | Scale: NTS | Sheet: 9 OF 10 | Drawing No. MD-AW740LM | Rev.

1070 TECHNOLOGY DRIVE
N. VENICE, FL 34275
P.O. BOX 1529
NOKOMIS, FL 34274
CERT. OF AUTH. #29296

ANTHONY LYNN MILLER
LICENSE
No. 58705
3/18/13
STATE OF FLORIDA
PROFESSIONAL ENGINEER

A. LYNN MILLER, P.E.
P.E.# 58705

TABLE 20:

Item	Dwg. #	Description	Mat.
1	7002	Main Frame Head, Sill & Jamb	6063-T6 Alum.
2	7071	Anchor Plate	6063-T6 Alum.
3	7003	Sash Top, Bottom & Side Rail	6063-T6 Alum.
4	7008	Frame Corner Key	Steel
5	7009	Sash Corner Key	Steel
6	7078	Frame Gasket	Vinyl Foam
7	7072	Sash Corner Gasket	Vinyl Foam
8	7070	Bulb Weatherstrip .187" x .275"	Flex PVC 70
10	7024	Maxim Multi-Point Lock	Steel
11	7026	Lock Support Plate	Steel
12	7014	Multi-Lock Keeper	Steel
13	7013	Tie Bar Guide	Nylon
14	7015	Tie Bar Assembly	Steel or SS
16	7029	Maxim Projected Operator	Steel
17	7030	Operator Gasket	Vinyl Foam
18	7031	Operator Backing Plate	Steel
19	7051	Operator Spacer Block	Nylon
21	7034	Operator Track & Slider	Steel
22	7023	Projected Hinge, Manuf. by Truth	Steel
24		Snubber, Anti-blowout Clip	Steel
31		Dura Seal Spacer	
32	1713	Setting Block 5/32" x 3/16" x 1-1/4"	EPDM
33	1714	Setting Block 5/32" x 7/16" x 1-1/4"	EPDM
35	7036	Bead B	6063-T6 Alum.
36	7042	Bead C	6063-T6 Alum.
37	7059	Bead D	6063-T6 Alum.
38	1224	Vinyl Bulb Wstp (Thick)	Flex PVC 70
39	1225	Vinyl Bulb Wstp (Thin)	Flex PVC 70
50		Dow 899 Silicon Backbedding	
60	7006	Screen Frame	3105-H14 Alum.
61	7040	Screen Corner Key	Polypropolene
62		Screen Cloth	Fiberglass
63	1635	Screen Spline	EM. PVC
64	320	Casement Screen Spring	Stainless Steel
70	134	Add-on Flange	6063-T6 Alum.
71	7004	Frame Assy Tube	6063-T6 Alum.
72		Maxim Pivot Slider Assembly	Steel
80		#8-32 x 1/2" Ph. Pn. Mach. Scr TYPE B	Stainless Steel
81	1157	#8 x 1/2" Ph. Pn. SMS	Stainless Steel
82		#8 x 5/8" Fl. Ph. SMS	Stainless Steel
83		#8 x 7/8" F.H. Ph. SMS	Stainless Steel
84		#8 x 1" Fl. Ph. TEK	Stainless Steel
85		#8 x 1" Quad Pn SMS	Stainless Steel
86		#8 X 1-1/2" Quad Pn SMS	Stainless Steel
87		#10 x 1/2" Ph. Pn./ TEK	Stainless Steel
89		#10-24 x 9/16" Ph. Pn. TYPE F	Stainless Steel
90		#12 x 1" Ph. Pn. TEK	Stainless Steel

ALL DETAILS SHOWN FROM THE INTERIOR

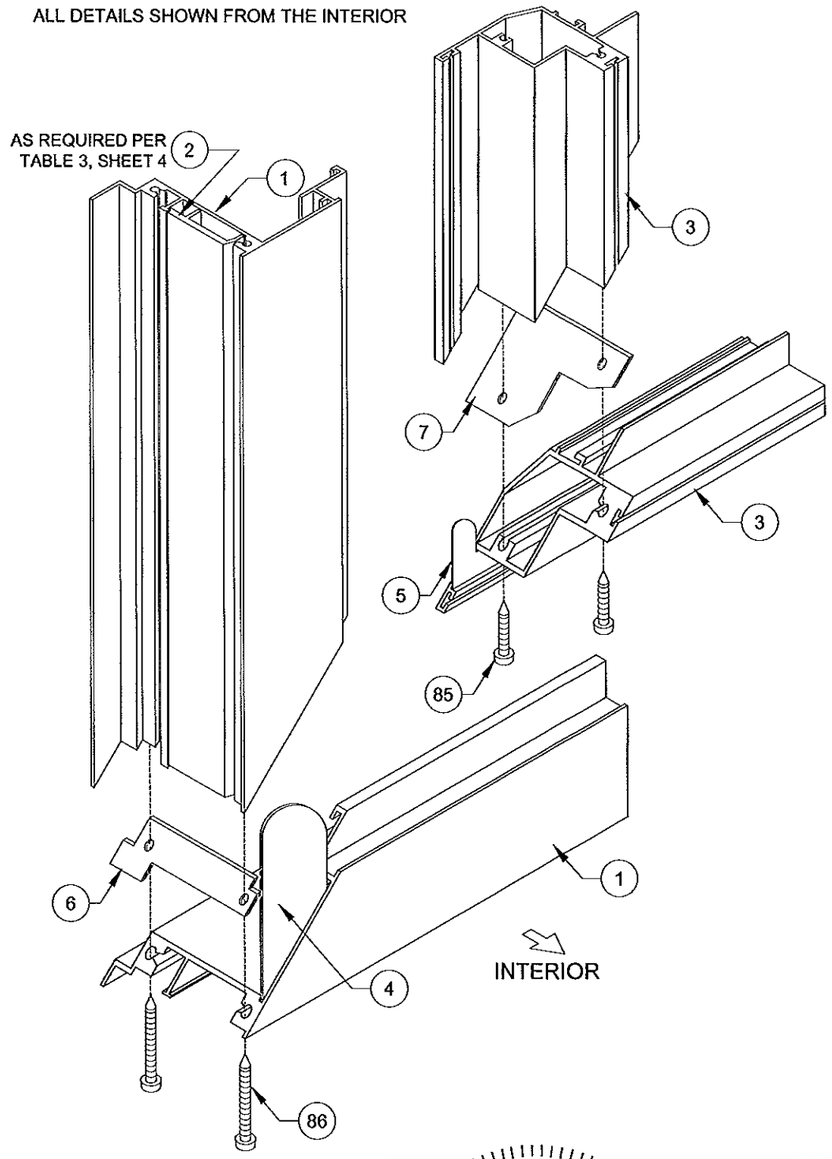

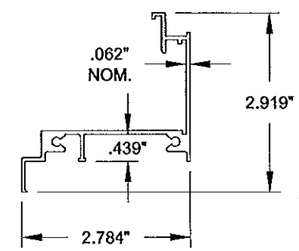

1 FRAME HEAD, SILL & JAMB
#7002, 6063-T6

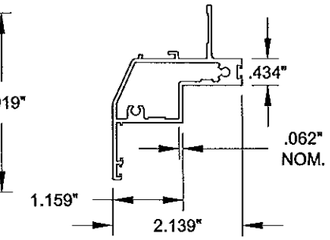

3 SASH TOP, BOTTOM & SIDE
#7003, 6063-T6

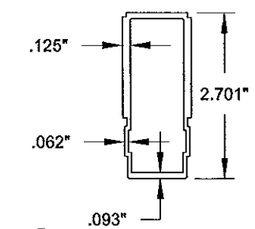

71 FRAME ASSEMBLY TUBE
#7004, 6063-T6

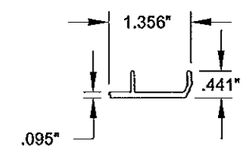

2 ANCHOR PLATE
#7071, 6063-T6

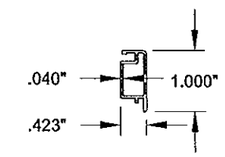

60 FIXED SCREEN FRAME
#7006, 6063-T6

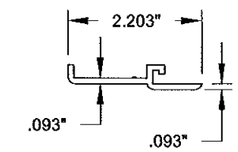

70 ADDON FLANGE
#134, 6063-T6

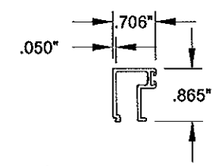

35 BEAD B
#7036, 6063-T6

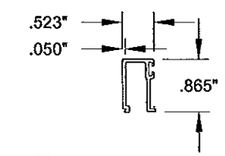

36 BEAD C
#7042, 6063-T6

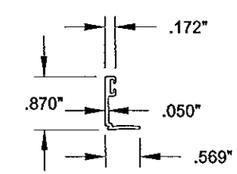

37 BEAD D
#7059, 6063-T6

ANTHONY LYNN MILLER
LICENSE
No. 58705
3/18/13
STATE OF FLORIDA
PROFESSIONAL ENGINEER
A. LYNN MILLER, P.E.
P.E.# 58705

PGT®

1070 TECHNOLOGY DRIVE
N. VENICE, FL 34275
P.O. BOX 1529
NOKOMIS, FL 34274

CERT. OF AUTH. #29296

Approved as complying with the Florida Building Code
Date April 11, 2013
NOA# 12-1218.07
Miami Dade Product Control
By Manuel Sanz

Revised By:	Date:	Revision:
Revised By:	Date:	Revision:

Description: BOM AND EXTRUSIONS

Drawn By: J ROSOWSKI

Title: AWNING WINDOW DETAILS - LM & SM

Date: 08/08/12

Series/Model:	Scale:	Sheet:	Drawing No.	Rev:
AW-740	NTS	10 OF 10	MD-AW740LM	