MIAMI-DADE COUNTY
PRODUCT CONTROL SECTION
11805 SW 26 Street, Room 208
Miami, Florida 33175-2474
T (786) 315-2590 F (786) 315-2599
www.miamidade.gov/economy

DEPARTMENT OF REGULATORY AND ECONOMIC RESOURCES (RER)
BOARD AND CODE ADMINISTRATION DIVISION

NOTICE OF ACCEPTANCE (NOA)

Korus USA, Inc.
8615 N. W. 64th Street Bay #1
Miami, FL 33166

SCOPE:

This NOA is being issued under the applicable rules and regulations governing the use of construction materials. The documentation submitted has been reviewed and accepted by Miami-Dade County RER - Product Control Section to be used in Miami Dade County and other areas where allowed by the Authority Having Jurisdiction (AHJ).

This NOA shall not be valid after the expiration date stated below. The Miami-Dade County Product Control Section (In Miami Dade County) and/or the AHJ (in areas other than Miami Dade County) reserve the right to have this product or material tested for quality assurance purposes. If this product or material fails to perform in the accepted manner, the manufacturer will incur the expense of such testing and the AHJ may immediately revoke, modify, or suspend the use of such product or material within their jurisdiction. RER reserves the right to revoke this acceptance, if it is determined by Miami-Dade County Product Control Section that this product or material fails to meet the requirements of the applicable building code.

This product is approved as described herein, and has been designed to comply with the Florida Building Code, including the High Velocity Hurricane Zone.

DESCRIPTION: Series "KA" Aluminum Outswing French Door-LMI

APPROVAL DOCUMENT: Drawing **No. W08-31 Rev E,** titled "Series KA Aluminum Outswing French Door", sheets 1 through 8 of 8, inclusive 2.1, dated 03/25/08 and last revised on JUL 15, 2013, prepared by Al-Farooq Corporation, signed and sealed by Javad Ahmad, P.E., bearing the Miami-Dade County Product Control Revision stamp with the Notice of Acceptance number and expiration date by the Miami-Dade County Product Control Section

MISSILE IMPACT RATING: Large and Small Missile Impact

Limitations:

1. Single or double doors may be mulled with approved impacted clipped mullion (under separate approvals), lower design rating shall apply and such installation to be reviewed & approved by AHJ.

LABELING: Each unit shall bear a permanent label with the manufacturer's name or logo, **Latina, Italy** and series and following statement: "Miami-Dade County Product Control Approved", noted herein.

RENEWAL of this NOA shall be considered after a renewal application has been filed and there has been no change in the applicable building code negatively affecting the performance of this product.

TERMINATION of this NOA will occur after the expiration date or if there has been a revision or change in the materials, use, and/or manufacture of the product or process. Misuse of this NOA as an endorsement of any product, for sales, advertising or any other purposes shall automatically terminate this NOA. Failure to comply with any section of this NOA shall be cause for termination and removal of NOA.

ADVERTISEMENT: The NOA number preceded by the words Miami-Dade County, Florida, and followed by the expiration date may be displayed in advertising literature. If any portion of the NOA is displayed, then it shall be done in its entirety.

INSPECTION: A copy of this entire NOA shall be provided to the user by the manufacturer or its distributors and shall be available for inspection at the job site at the request of the Building Official.

This NOA **revises & renews NOA # 09-0128.13** and consists of this page 1 and evidence pages E-1 & E-2, as well as approval document mentioned above.

The submitted documentation was reviewed by **Ishaq I. Chanda, P.E.**

MIAMI-DADE COUNTY APPROVED

7/16/13

NOA No. 12-1231.06
Expiration Date: July 03, 2018
Approval Date: July 25, 2013

NOTICE OF ACCEPTANCE: EVIDENCE SUBMITTED

A. DRAWINGS

1. Manufacturer's die drawings and sections.
2. Drawing **No. W08-31 Rev E,** titled "Series KA Aluminum Outswing French Door", sheets 1 through 8 of 8, dated 03/25/08 and last revised on JUL 15, 2013, prepared by Al-Farooq Corporation, signed and sealed by Javad Ahmad, P. E.

B. TESTS

1. Test reports on 1) Air Infiltration Test, per FBC, TAS 202-94
   2) Uniform Static Air Pressure Test, Loading per FBC, TAS 202-94
   3) Water Resistance Test per FBC, TAS 202-94
   4) Forced Entry Test, per FBC 2411 3.2.1 and TAS 202-94
   5) Large Missile Impact Test per FBC, TAS 201-94
   6) Cyclic Wind Pressure Loading per FBC, TAS 203-94

   along with installation diagram of aluminum outswing door w/ 1-3/16" flange and without flange, prepared by Fenestration Testing Lab., Test Report No(s). **FTL-6531,** dated 11/12/12 and last revised on 07/02/13, signed and sealed by Jorge A. Naya, P.E.
   Note: This test report has addendum letter dated July 02, 2013 and impacted sample D-1 photograph (sent via e-mail dated 07/12/13) issued by Fenestration Testing Lab.
2. Test reports on 1) Air Infiltration Test, per FBC, TAS 202-94
   2) Uniform Static Air Pressure Test, Loading per FBC, TAS 202-94
   3) Water Resistance Test per FBC, TAS 202-94
   4) Forced Entry Test, per FBC 2411 3.2.1 and TAS 202-94
   5) Large Missile Impact Test per FBC, TAS 201-94
   6) Cyclic Wind Pressure Loading per FBC, TAS 203-94

   along with installation diagram of aluminum outswing door, prepared by Hurricane Testing Lab., Test Report No(s). **HTL- 0458-0606-07,** dated 04/25/08, signed and sealed by Vinu J. Abraham, P.E. (Submitted under file # **09-0128.13**).
3. Additional Referenced fixed Windows test report # **FTL-7101,** dated 04/01/13 per TAS 201, 202 & 203-94, issued by Fenestration Testing Lab., signed & sealed by Marlin D. Brinson, P.E.

C. CALCULATIONS

1. Anchor verification calculations and structural analysis, complying with FBC-2010, prepared by Al Farooq Corporation, dated 04/04/13, signed and sealed by Javad Ahmad, P.E.
2. Glazing complies w/ ASTME-1300-02 & -04

D. QUALITY ASSURANCE

1. Miami Dade Department of Regulatory and Economic Resources (RER).

Ishaq I. Chanda

Ishaq I. Chanda, P.E.
Product Control Examiner
NOA No. 12-1231.06
Expiration Date: July 03, 2018
Approval Date: July 25, 2013

NOTICE OF ACCEPTANCE: EVIDENCE SUBMITTED

E. MATERIAL CERTIFICATIONS

1. Notice of Acceptance No. **11-0624.02** issued to E.I. DuPont DeNemours & Co., Inc. for their "**DuPont Sentry Glass Interlayer**", expiring on 01/14/17.
2. Notice of Acceptance No. **11-0624.01** issued to E.I. DuPont DeNemours & Co., Inc. for their "**DuPont Butacite PVB Interlayer**", expiring on 121/11/16.
3. Notice of Acceptance No. **12-1231.08** issued to Eastman Chemical Company (MA), Inc. (Former Solutia Inc.) for their "**Saflex CP:** Saflex and saflex HP composite interlayer w/ PET core", expiring on 12/11/18.

F. STATEMENTS

1. Statement letter of conformance and letter of no financial interest, prepared by Al Farooq Corporation, dated 03/15/13, signed and sealed by Javad Ahmad, P.E.
2. Lab compliance as part of the above referenced test reports.
3. Distribution agreement dated 06/02/13 between manufacturer, Korus spa, Italy and Korus, USA (distributor), signed by Guiseppe AndiNacci and Gianfranco Ippoliti on behalf of respective companies.

G. OTHER

1. This NOA **revises** & **renews** NOA # **09-0128.13**, expired on July 03, 2013.
2. Test proposal, dated 02/02/12 approved by RER and Test proposal # **04-0210**, dated May 17, 2004, approved by BCCO.
3. Previous NOA(s) related to the files are # 08-0512.17

Ishaq I. Chanda

Ishaq I. Chanda, P.E.
Product Control Examiner
NOA No. 12-1231.06
Expiration Date: July 03, 2018
Approval Date: July 25, 2013

DOOR LEAF HEIGHT = INTERIOR OPNG. HEIGHT – 1.50"
DOOR LEAF WIDTH (X DOORS) = INT. OPNG. WIDTH – 2.375"
DOOR LEAF WIDTH (XX DOORS) = (INT. OPNG. WIDTH – 2.50")/2
D.L.O. HEIGHT = INTERIOR OPNG. HEIGHT – 9.875"
D.L.O. WIDTH (X DOORS) = INT. OPNG. WIDTH – 10.875"
D.L.O. WIDTH (XX DOORS) = (INT. OPNG. WIDTH – 19.50")/2

THESE DOORS ARE RATED FOR LARGE & SMALL MISSILE IMPACT. SHUTTERS ARE NOT REQUIRED.

SERIES KA
ALUMINUM OUTSWING FRENCH DOOR

APPROVAL APPLIES TO SINGLE (X) AND DOUBLE (XX) LEAF DOORS. ALSO COMBINATION OF DOOR/DOOR OR DOOR WITH MIAMI–DADE COUNTY APPROVED SIDELITES & TRANSOMS BY USING MIAMI–DADE COUNTY APPROVED LARGE MISSILE IMPACT RESISTANT CLIPPED MULLIONS IN BETWEEN.
LOWER DESIGN PRESSURES FROM DOOR, SIDELITE, TRANSOM OR MULLION APPROVAL WILL APPLY TO ENTIRE SYSTEM.

THIS PRODUCT HAS BEEN DESIGNED AND TESTED TO COMPLY WITH THE REQUIREMENTS OF THE FLORIDA BUILDING CODE INCLUDING HIGH VELOCITY HURRICANE ZONE (HVHZ).

1BY OR 2BY WOOD BUCKS BY OTHERS, MUST BE ANCHORED PROPERLY TO TRANSFER LOADS TO THE STRUCTURE.

ANCHORS SHALL BE AS LISTED, SPACED AS SHOWN ON DETAILS, ANCHORS EMBEDMENT TO BASE MATERIAL SHALL BE BEYOND WALL DRESSING OR STUCCO.

ANCHORING OR LOADING CONDITIONS NOT SHOWN IN THESE DETAILS ARE NOT PART OF THIS APPROVAL.

A LOAD DURATION INCREASE IS USED IN DESIGN OF ANCHORS INTO WOOD ONLY.

MATERIALS INCLUDING BUT NOT LIMITED TO STEEL/METAL SCREWS, THAT COME INTO CONTACT WITH OTHER DISSIMILAR MATERIALS SHALL MEET THE REQUIREMENTS OF THE FLORIDA BLDG. CODE SECTION 2003.8.4.

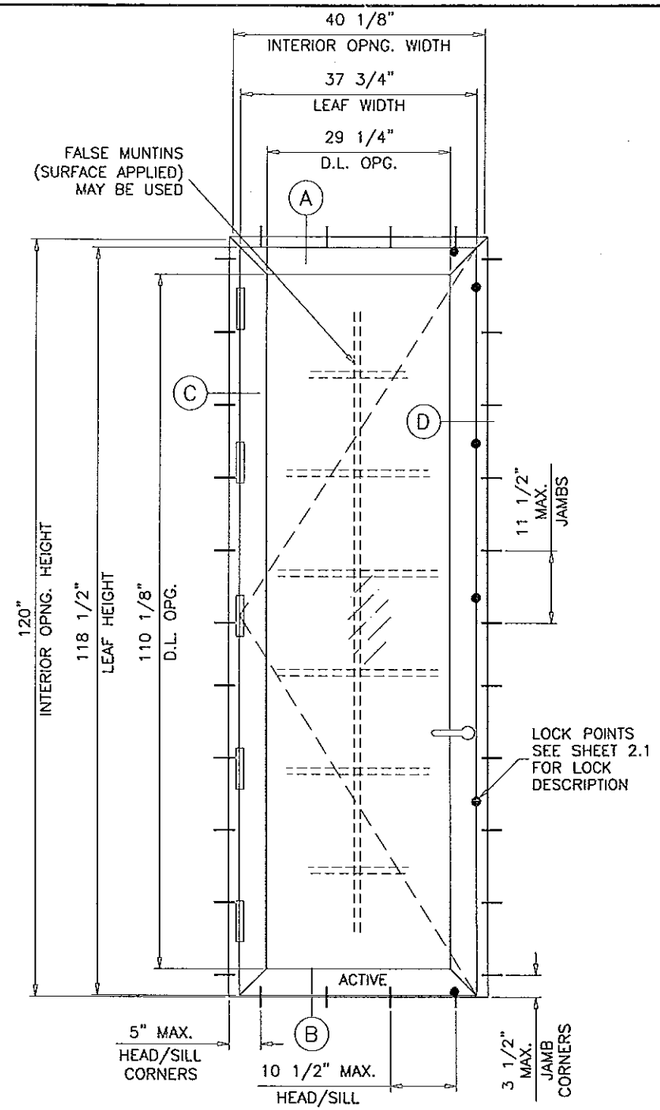

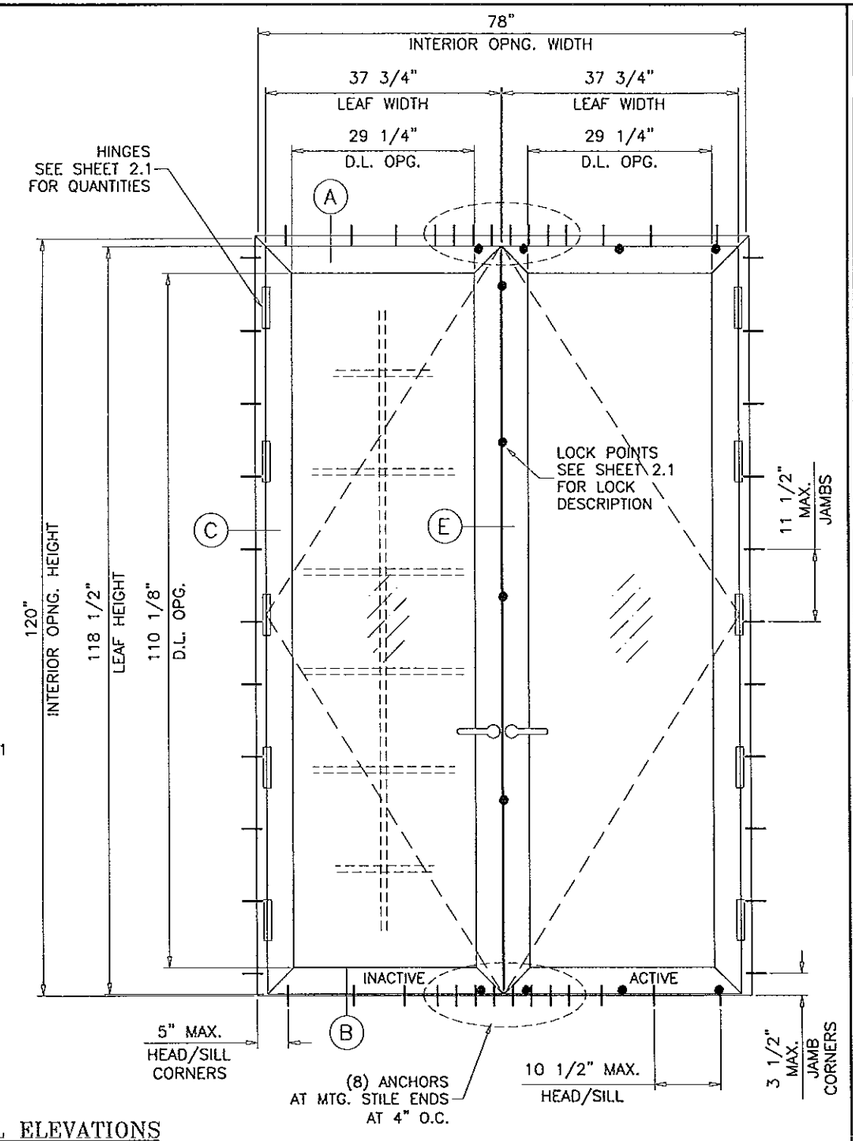

TYPICAL ELEVATIONS

DOORS LOAD CAPACITY – PSF
SINGLE DOORS (X)

DOOR DIMS.			GLASS TYPE 'A'		GLASS TYPE 'B'		GLASS TYPE 'C'	
INT. OPNG. WIDTH	INT. OPNG. HEIGHT	LEAF WIDTH	EXT.(+)	INT.(–)	EXT.(+)	INT.(–)	EXT.(+)	INT.(–)
36"	94–7/8"	33–1/2"	75.0	75.0	75.0	75.0	60.0	60.0
40–1/8"	98"	37–3/4"	66.0	66.0	66.0	66.0	60.0	60.0
40–1/8"	120"	37–3/4"	53.3	53.3	66.0	66.0	60.0	60.0

DOORS LOAD CAPACITY – PSF
DOUBLE DOORS (XX)

DOOR DIMS.			GLASS TYPE 'A'		GLASS TYPE 'B'		GLASS TYPE 'C'	
INT. OPNG. WIDTH	INT. OPNG. HEIGHT	LEAF WIDTH	EXT.(+)	INT.(–)	EXT.(+)	INT.(–)	EXT.(+)	INT.(–)
69–5/8"	94–7/8"	33–1/2"	75.0	75.0	75.0	75.0	60.0	60.0
78"	98"	37–3/4"	66.0	66.0	66.0	66.0	60.0	60.0
78"	120"	37–3/4"	53.3	53.3	66.0	66.0	60.0	60.0

NOTE:
GLASS CAPACITIES ON THIS SHEET ARE BASED ON ASTM E1300–04 (3 SEC. GUSTS) AND FLORIDA BUILDING COMMISSION DECLARATORY STATEMENT DCA05–DEC–219

Engr: JAVAD AHMAD
CIVIL
FLA. PE # 70592
C.A.N. 3538
JUL 15 2013

PRODUCT REVISED
as complying with the Florida Building Code
Acceptance No. 12-1231.06
Expiration Date July 03, 2018
By [signature]
Miami Dade Product Control

AL-FAROOQ CORPORATION
ENGINEERS & PRODUCT DEVELOPMENT
1235 S.W. 87 AVE
MIAMI, FLORIDA 33174
TEL. (305) 264-8100 FAX. (305) 262-6978
COMP–ANL\W08–31KUI

SERIES KA ALUMINUM OUTSWING FRENCH DOOR (L.M.I.)

KORUS USA, INC.
8615 N.W. 64 STREET BAY #1
MIAMI, FL. 33166
TEL. (954) 874–7040 FAX. (954) 874–7049

revisions:

no	date	by	description
A	11.10.08		INTERIOR WOOD COVERS ADDED
B	10.30.12		GENERAL REVISION
C	03.04.13		NEW SIZED ADDED
D	06.04.13		REV. PER RER COMMENTS
E	07.12.13		REV. PER RER COMMENTS

date: 03–25–08
scale: 1/2"=1'–0"
dr. by: HAMID
chk. by:

drawing no.
W08–31

sheet 1 of 8

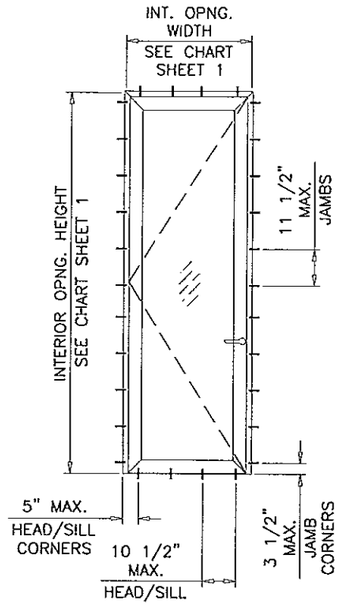

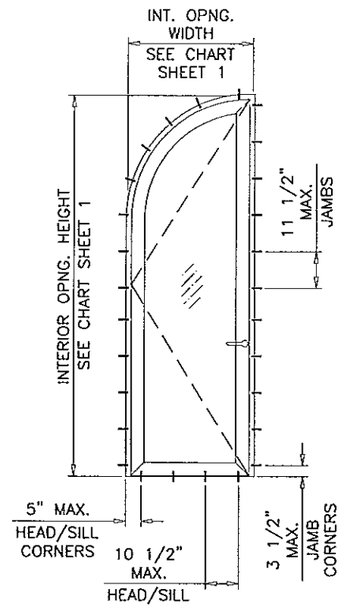

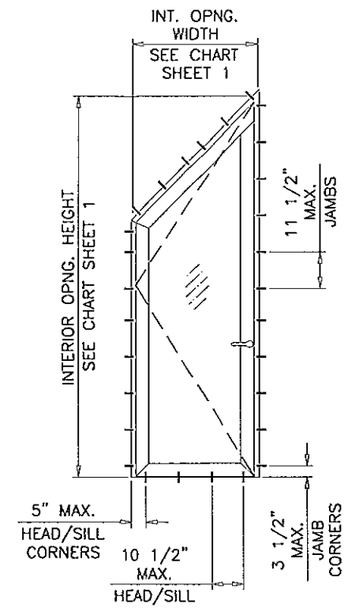

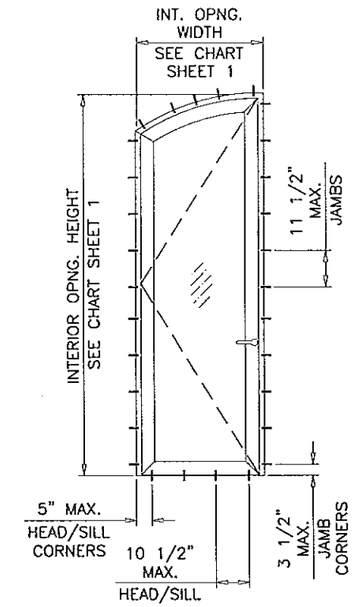

PRODUCT REVISED
as complying with the Florida
Building Code
Acceptance No. 12-1231.06
Expiration Date 7/3/15
By Ishen I. Chowdhury
Miami-Dade Product Control

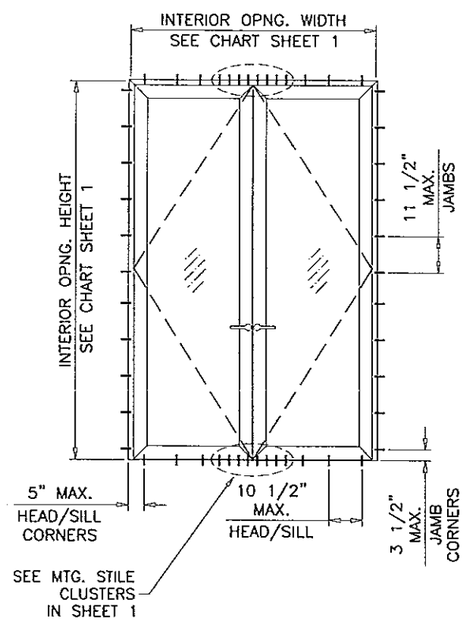

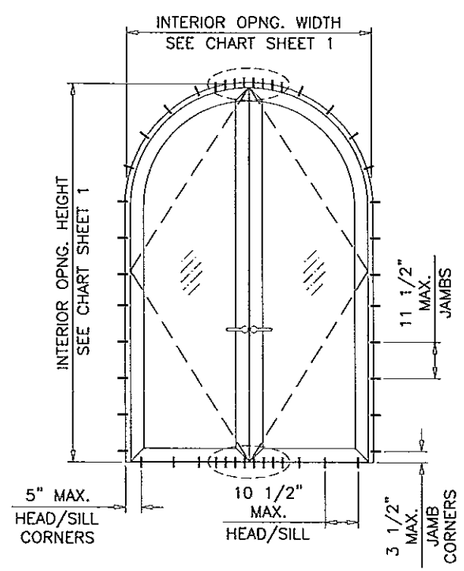

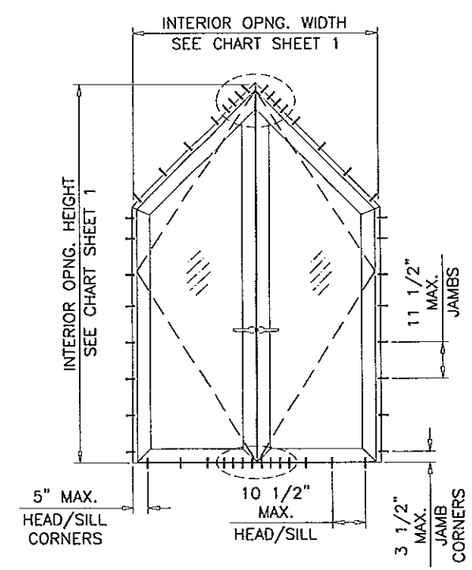

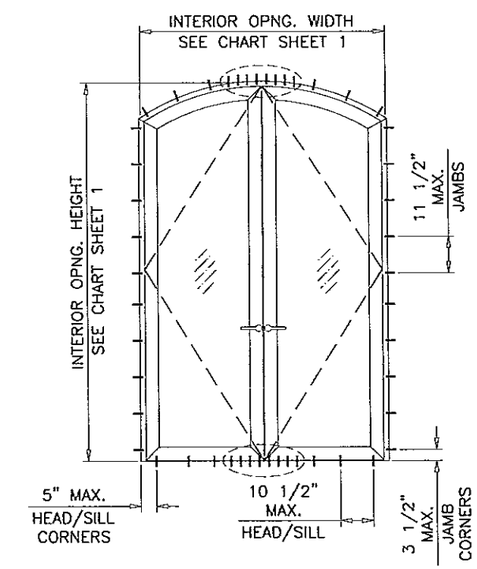

ALLOWABLE LOADS FOR ALTERNATE SHAPES AS SHOWN ABOVE OR SIMILAR CAN BE VERIFIED BY INSCRIBING DOOR SHAPE WITHIN RECTANGLE AS SHOWN IN DOTTED LINES AND OBTAINING ALLOWABLE LOADS FROM THOSE SHAPES.

APPROVED CONFIGURATIONS

Engr: JAVAD AHMAD
CIVIL
FLA. PE # 70592
C.A.N. 3538

JUL 15 2013

AL-FAROOQ CORPORATION
ENGINEERS & PRODUCT DEVELOPMENT
1235 S.W. 87 AVE
MIAMI, FLORIDA 33174
TEL. (305) 264-8100 FAX. (305) 262-6978

COMP-ANL\W08-31KUI

SERIES KA ALUMINUM OUTSWING FRENCH DOOR (L.M.I.)

KORUS USA, INC.
8615 N.W. 64 STREET BAY #1
MIAMI, FL. 33166
TEL. (954) 874-7040 FAX. (954) 874-7049

revisions:

no	date	by	description
A	11.10.08		INTERIOR WOOD COVERS ADDED
B	10.30.12		GENERAL REVISION
C	03.04.13		NEW SIZED ADDED
D	06.04.13		REV. PER RER COMMENTS
E	07.12.13		REV. PER RER COMMENTS

date: 03-25-08
scale: 1/2" = 1"
dr. by: HAMID
chk. by:

drawing no.
W08-31

SEALANTS:

LEAF CORNERS SEALED WITH DOW CORNING 899 SEALANT.

HINGES:

(3) PER LEAF FOR INTERIOR OPNG. HEIGHTS UPTO 94-7/8"
AT 12" FROM TOP & BOTTOM AND 36" O.C. MAX.
(5) PER LEAF FOR INTERIOR OPNG HEIGHTS ABOVE 94-7/8"
AT 5" FROM TOP & BOTTOM AND 27" O.C. MAX.
EACH HASP FASTENED TO LEAF AND FRAME WITH (2) #1/4-20 X 5/8" OH MS

HINGE SPACING SHOWN ABOVE IS FOR RECTANGULAR SHAPED DOORS,
FOR ARCH TOP DOORS REDUCE HINGE SPACING AS REQD. TO MAINTAIN TOTAL QUANTITY.

ANTI-BLOW OUT CLIPS:

28" LONG SLIDE IN METALLIC BLOW-OUT CLIPS AT EACH FRAME JAMB
AND HINGE STILE AT 18" FROM TOP AND BOTTOM AND 30" O.C. MAX.
BLOW OUT CLIPS NOT REQUIRED FOR DOOR OPNG HEIGHTS UPTO 96 INCHES.

LOCKS:

ACTIVE LEAF:

MULTI POINT LOCK SYSTEM BY 'SIEGENIA' AT 41"
FROM BOTTOM
HANDLE ACTIVATES DEAD BOLT AND SHOOT BOLTS
ENGAGING AT HEAD, SILL AND LOCK STILES
KEY OPERATED ON EXTERIOR AND THUMB TURN ON
INTERIOR
FASTENED TO ACTIVE LEAF LOCK STILE WITH
(3) #12-28 X 3-1/8" FH MS
(12) #8 X 1-3/4" FH SMS
(2) #8 X 3/4" FH SDS

INACTIVE LEAF:

TWO POINT LOCK SYSTEM BY 'SIEGENIA' AT 41"
FROM BOTTOM
HANDLE ACTIVATES SHOOT BOLTS ENGAGING AT
HEAD AND SILL
FASTENED TO INACTIVE LEAF LOCK STILE WITH
(3) #12-28 X 3-1/8" FH MS
(15) #10 X 1-3/4" FH SMS
(4) #8 X 7/8" FH SDS

KEEPERS:

SURFACE MOUNT KEEPERS FACING LOCK POINTS
EACH KEEPER FASTENED TO FRAME AND STILE WITH
(3) #8 X 5/8" OH SDS

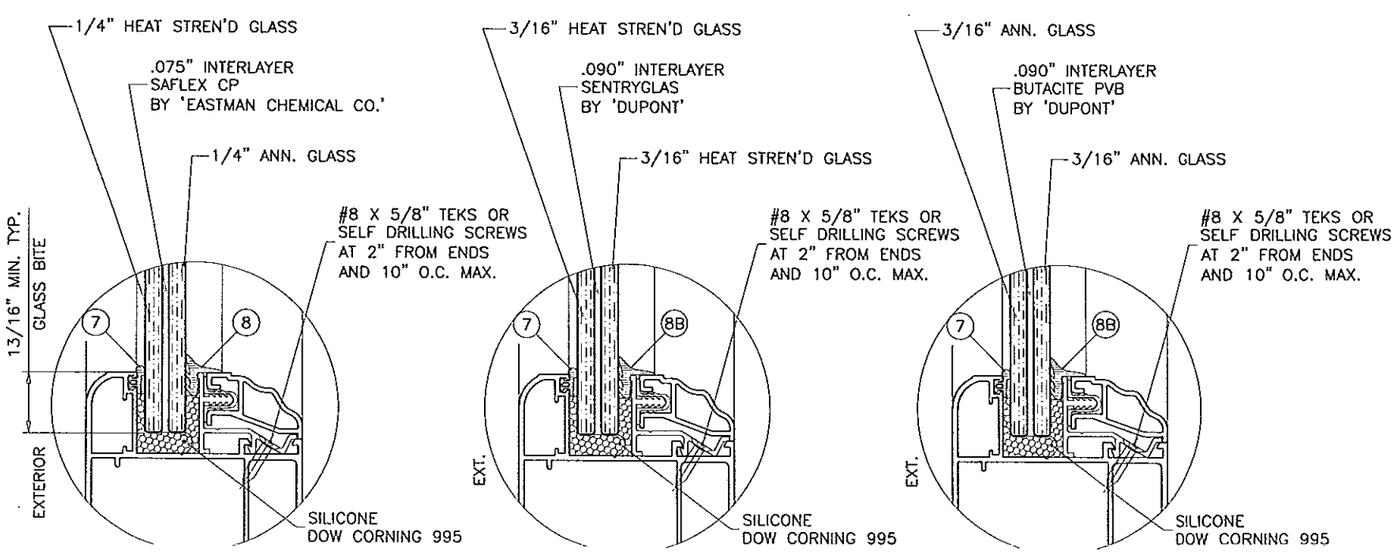

GLASS TYPE 'A' GLASS TYPE 'B' GLASS TYPE 'C'

GLAZING OPTIONS

PRODUCT REVISED
as complying with the Florida
Building Code
Acceptance No. 12-1231.06
Expiration Date 7/15/13
By
Miami-Dade Product Control

Engr: JAVAD AHMAD
CIVIL
FLA. PE # 70592
C.A.N. 3538

JUL 15 2013

AL-FAROOQ CORPORATION
ENGINEERS & PRODUCT DEVELOPMENT
1235 S.W. 87 AVE
MIAMI, FLORIDA 33174
TEL. (305) 264-8100 FAX. (305) 262-6978

COMP-ANL\W08-31KU

SERIES KA ALUMINUM OUTSWING FRENCH DOOR (L.M.I.)

KORUS USA, INC.
8615 N.W. 64 STREET BAY #1
MIAMI, FL. 33166
TEL. (954) 874-7040 FAX. (954) 874-7049

revisions:

no	date	by	description
A	11.10.08		INTERIOR WOOD COVERS ADDED
B	10.30.12		GENERAL REVISION
C	03.04.13		NEW SIZED ADDED
D	06.04.13		REV. PER RER COMMENTS
E	07.12.13		REV. PER RER COMMENTS

date: 03-25-08
scale: 1/2" = 1"
dr. by: HAMID
chk. by:

drawing no.
W08-31

sheet 2.1 of 8

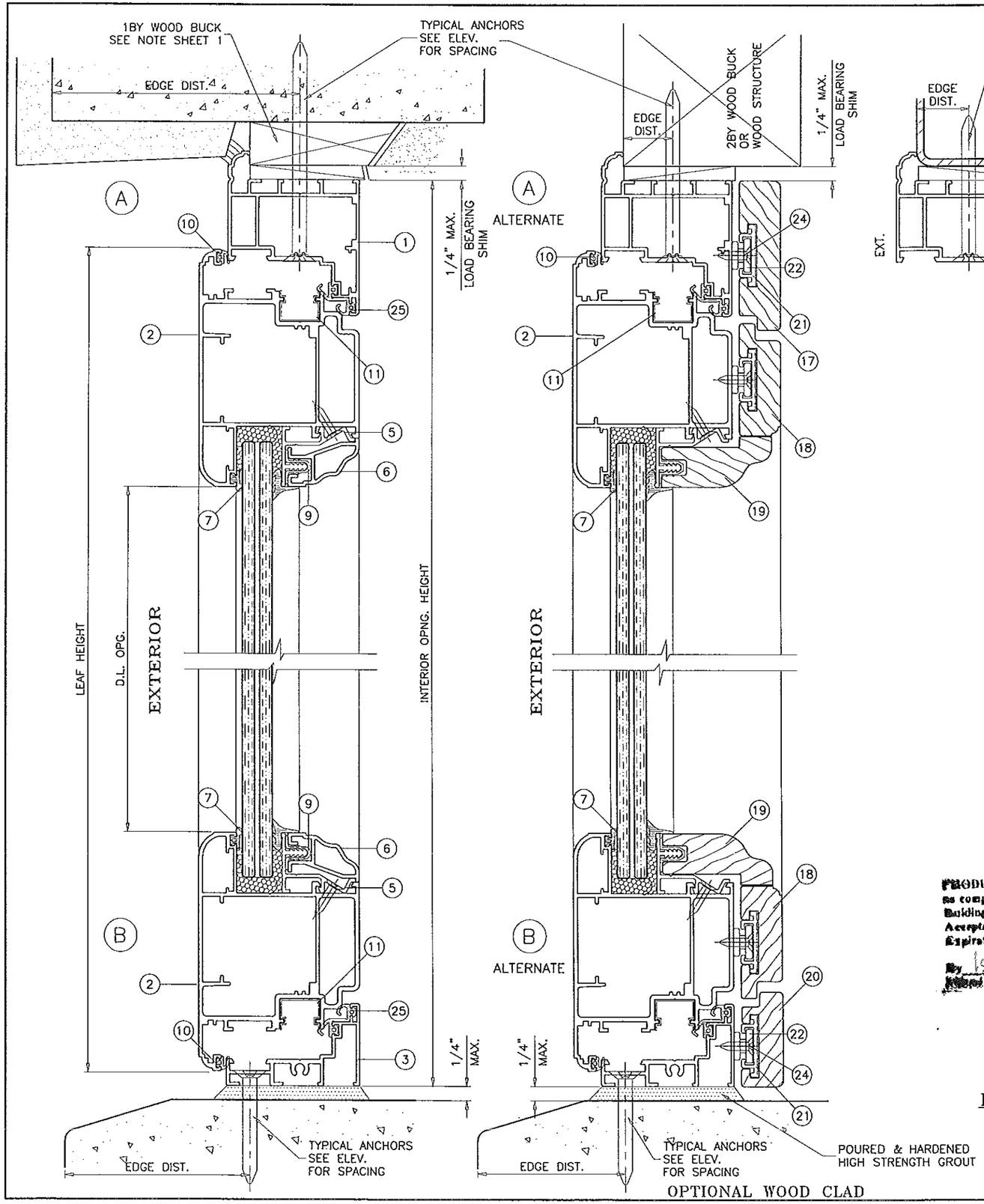

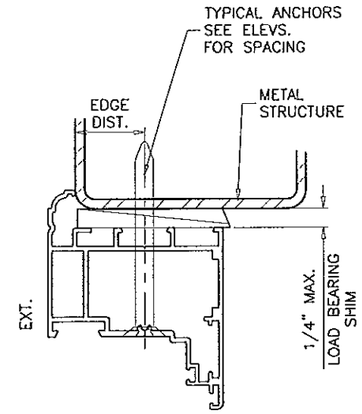

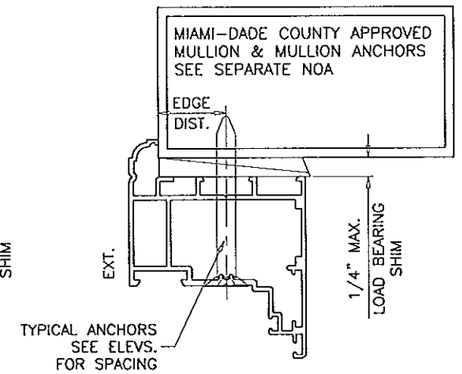

1BY OR 2BY WOOD BUCKS AND METAL STRUCTURE NOT BY KORUS MUST SUSTAIN LOADS IMPOSED BY GLAZING SYSTEM AND TRANSFER THEM TO THE BUILDING STRUCTURE.

TYPICAL ANCHORS: SEE ELEV. FOR SPACING

1/4" DIA. ULTRACON BY 'ELCO' (Fu=177 KSI, Fy=155 KSI)

INTO 2BY WOOD BUCKS OR WOOD STRUCTURES
1-1/2" MIN. PENETRATION INTO WOOD

THRU 1BY BUCKS INTO CONC. OR MASONRY
1-1/4" MIN. EMBED INTO CONCRETE (HEAD/SILL)
1-1/4" MIN. EMBED INTO CONC. OR MASONRY (JAMBS)

DIRECTLY INTO CONC. OR MASONRY
1-1/4" MIN. EMBED INTO CONCRETE (HEAD/SILL)
1-1/4" MIN. EMBED INTO CONC. OR MASONRY (JAMBS)

1/4" DIA. TEKS OR SELF DRILLING SCREWS (GRADE 5 CRS)

INTO MIAMI-DADE COUNTY APPROVED MULLIONS (MIN. THK. = 1/8")

INTO METAL STRUCTURES
STEEL : 12 GA. MIN. (Fy = 36 KSI MIN.)
ALUMINUM : 1/8" THK. MIN. (6063-T5 MIN.)
(STEEL IN CONTACT WITH ALUMINUM TO BE PLATED OR PAINTED)

TYPICAL EDGE DISTANCE

INTO CONCRETE AND MASONRY = 2-1/2" MIN.
INTO WOOD STRUCTURE = 1" MIN.
INTO METAL STRUCTURE = 3/4" MIN.

CONCRETE AT HEAD, SILL OR JAMBS f'c = 3000 PSI MIN.
C-90 HOLLOW/FILLED BLOCK AT JAMBS f'm = 2000 PSI MIN.

SEALANTS:

PANEL CORNERS SEALED WITH DOW CORNING 899 SEALANT.

PRODUCT REVISED
as complying with the Florida Building Code
Acceptance No. 12-1231.06
Expiration Date 7/31/18
By Ishwar N. Chawla
Miami-Dade Product Control

INSTALLATION DETAILS
FRAMES WITH 1/2" FLANGE

Engr: JAVAD AHMAD
CIVIL
FLA. PE # 70592
C.A.N. 3538

JUL 15 2013

AL-FAROOQ CORPORATION
ENGINEERS & PRODUCT DEVELOPMENT
1235 S.W. 87 AVE
MIAMI, FLORIDA 33174
TEL. (305) 264-8100 FAX. (305) 262-6978
COMP-ANL\W08-31KUI

SERIES KA ALUMINUM OUTSWING FRENCH DOOR (L.M.I.)

KORUS USA, INC.
8615 N.W. 64 STREET BAY #1
MIAMI, FL. 33166
TEL. (954) 874-7040 FAX. (954) 874-7049

revisions:

no	date	by	description
A	11.10.08		INTERIOR WOOD COVERS ADDED
B	10.30.12		GENERAL REVISION
C	03.04.13		NO CHANGE THIS SHEET
D	06.04.13		REV. PER RER COMMENTS
E	07.12.13		NO CHANGE THIS SHEET

date: 03-25-08
scale: 1/2" = 1"
dr. by: HAMID
chk. by:

drawing no.
W08-31

sheet 3 of 8

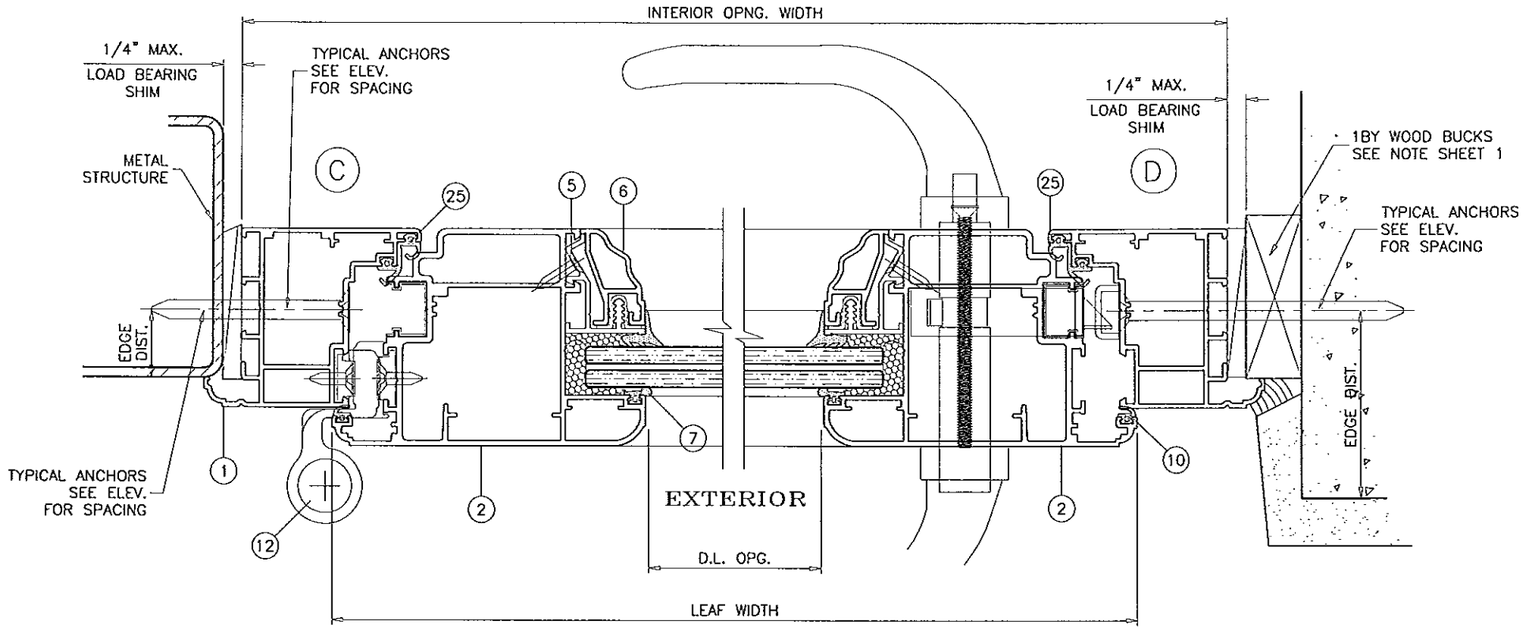

SINGLE (X)

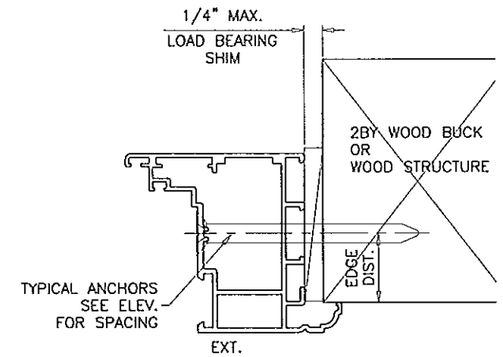

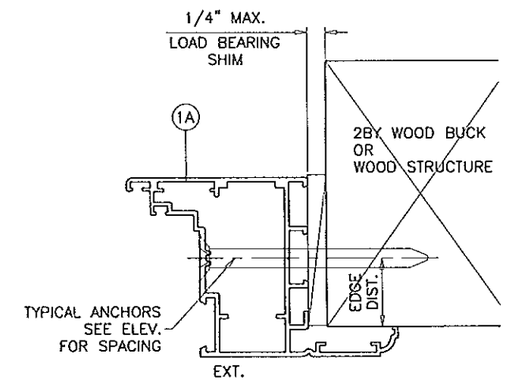

FRAME WITH 1 3/16" FLANGE OPTIONAL

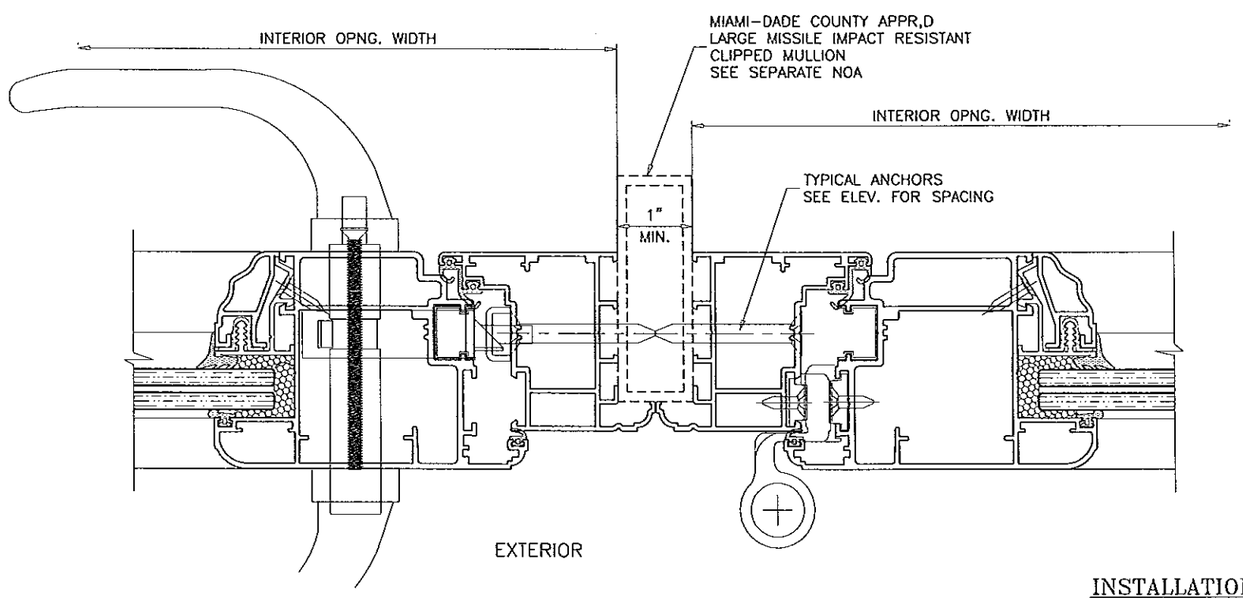

INSTALLATION DETAILS
FRAMES WITH 1/2" FLANGE

PRODUCT REVISED
as complying with the Florida Building Code
Acceptance No. 12-1231.06
Expiration Date 7/3/18
By Ishaq I. Chanl
Miami Dade Product Control

Engr: JAVAD AHMAD
CIVIL
FLA. PE # 70592
C.A.N. 3538

JUL 15 2013

AL-FAROOQ CORPORATION
ENGINEERS & PRODUCT DEVELOPMENT
1235 S.W. 87 AVE
MIAMI, FLORIDA 33174
TEL. (305) 264-8100 FAX. (305) 262-6978

COMP-ANL\W08-31KUI

SERIES KA ALUMINUM OUTSWING FRENCH DOOR (L.M.I.)

KORUS USA, INC.
8615 N.W. 64 STREET BAY #1
MIAMI, FL. 33166
TEL. (954) 874-7040 FAX. (954) 874-7049

revisions:

no	date	by	description
A	11.10.08		INTERIOR WOOD COVERS ADDED
B	10.30.12		GENERAL REVISION
C	03.04.13		NO CHANGE THIS SHEET
D	06.04.13		REV. PER RER COMMENTS
E	07.12.13		REV. PER RER COMMENTS

date: 03-25-08
scale: 1/2" = 1"
dr. by: HAMID
chk. by:

drawing no.
W08-31

sheet 4 of 8

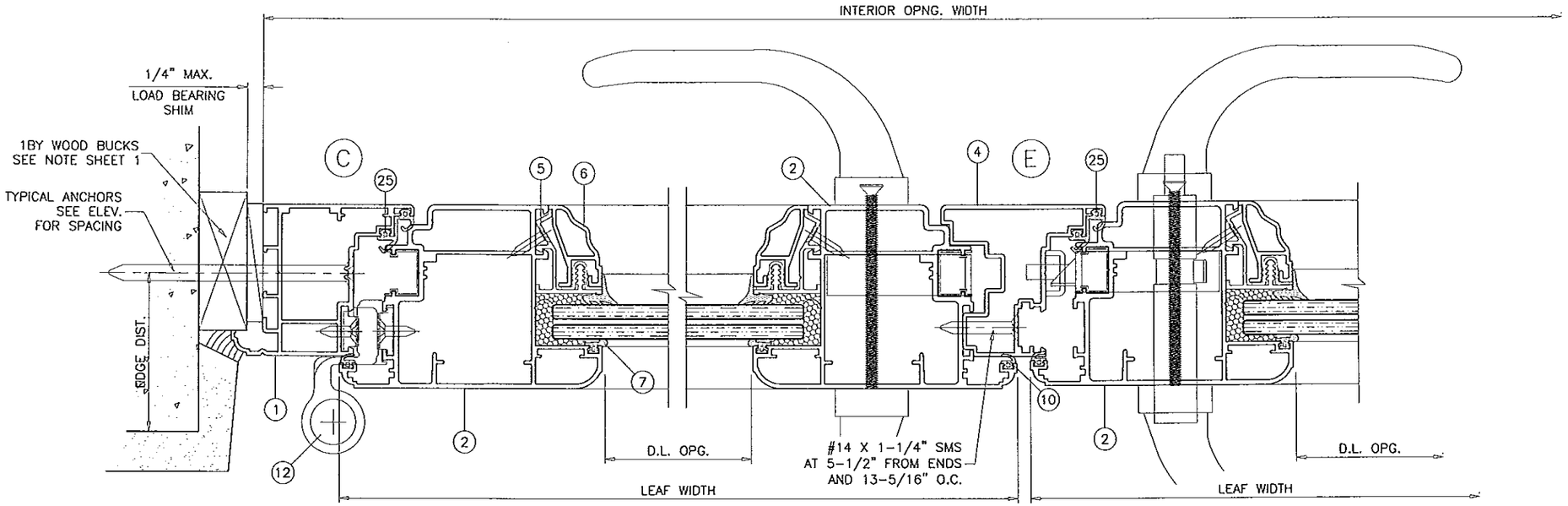

DOUBLE (XX)

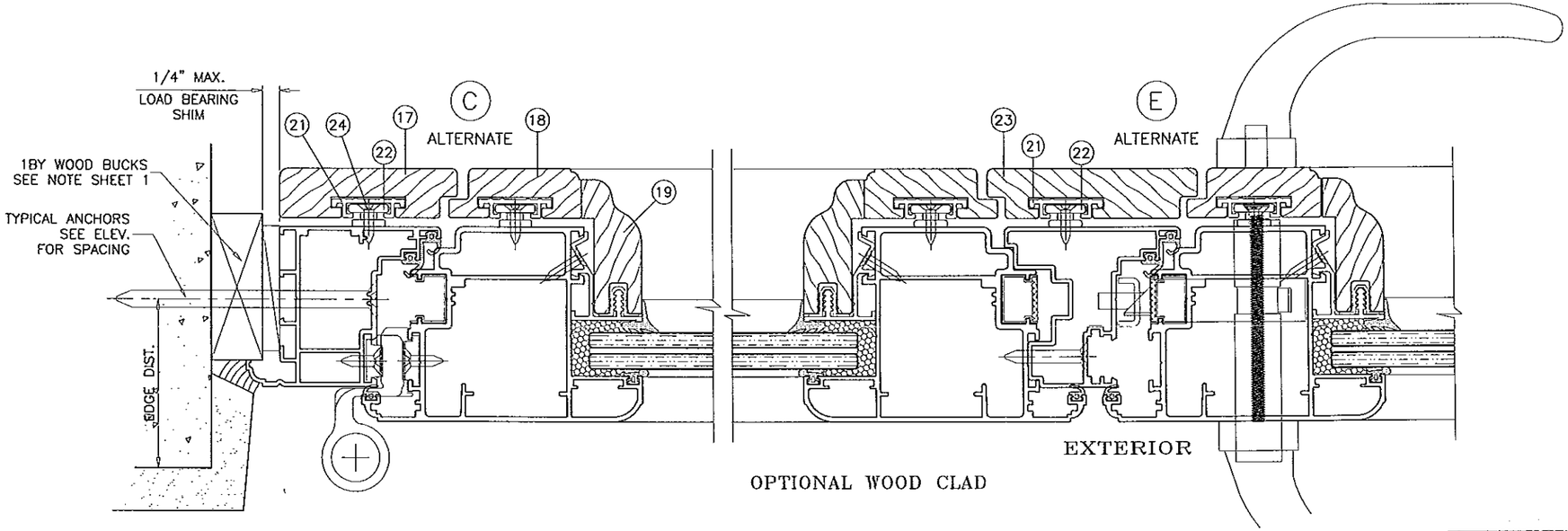

OPTIONAL WOOD CLAD

INSTALLATION DETAILS
FRAMES WITH 1/2" FLANGE

PRODUCT REVISED
as complying with the Florida Building Code
Acceptance No. 12-1231.06
Expiration Date 7/3/13
By Miami Dade Product Control

Engr: JAVAD AHMAD
CIVIL
FLA. PE # 70592
C.A.N. 3538

JUL 15 2013

AL-FAROOQ CORPORATION
ENGINEERS & PRODUCT DEVELOPMENT
1235 S.W. 87 AVE
MIAMI, FLORIDA 33174
TEL. (305) 264-8100 FAX. (305) 262-6978
COMP-ANL\W08-31KUI

SERIES KA ALUMINUM OUTSWING FRENCH DOOR (L.M.I.)

KORUS USA, INC.
8615 N.W. 64 STREET BAY #1
MIAMI, FL. 33166
TEL. (954) 874-7040 FAX. (954) 874-7049

revisions:

no	date	by	description
A	11.10.08		INTERIOR WOOD COVERS ADDED
B	10.30.12		GENERAL REVISION
C	03.04.13		NO CHANGE THIS SHEET
D	06.04.13		REV. PER RER COMMENTS
E	07.12.13		REV. PER RER COMMENTS

date: 03-25-08
scale: 1/2" = 1"
dr. by: HAMID
chk. by:

drawing no.
W08-31

sheet 5 of 8

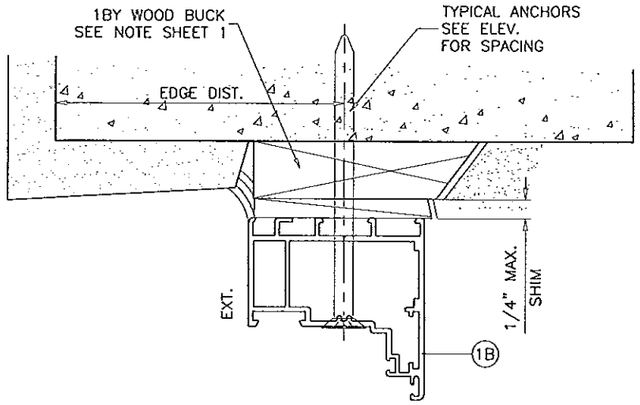

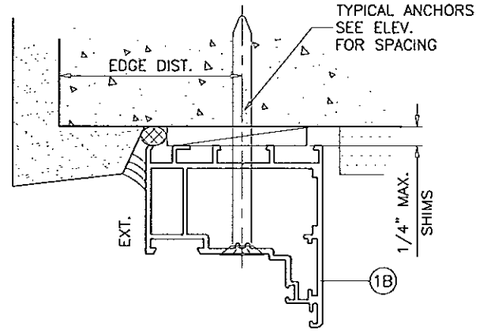

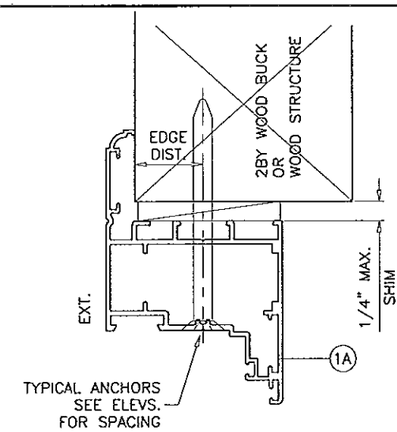

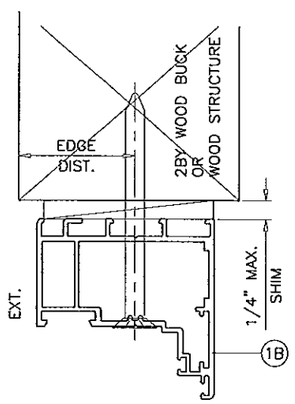

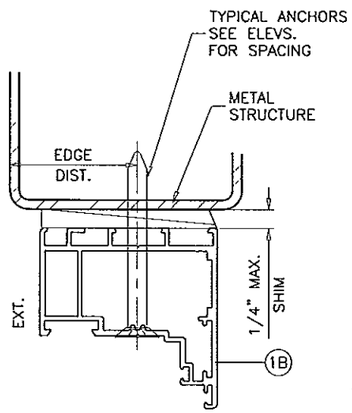

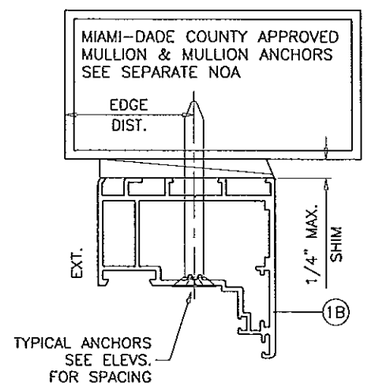

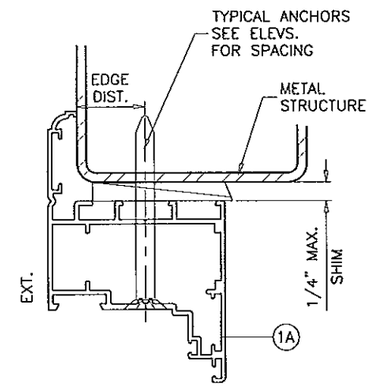

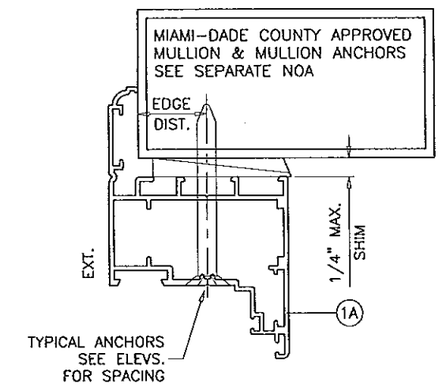

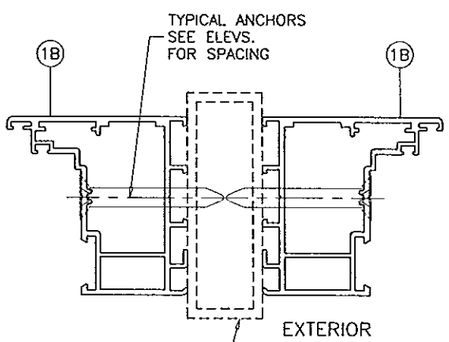

MIAMI-DADE COUNTY APPR,D
LARGE MISSILE IMPACT RESISTANT
CLIPPED MULLION
SEE SEPARATE NOA

INSTALLATION DETAILS
FRAMES WITHOUT FLANGE

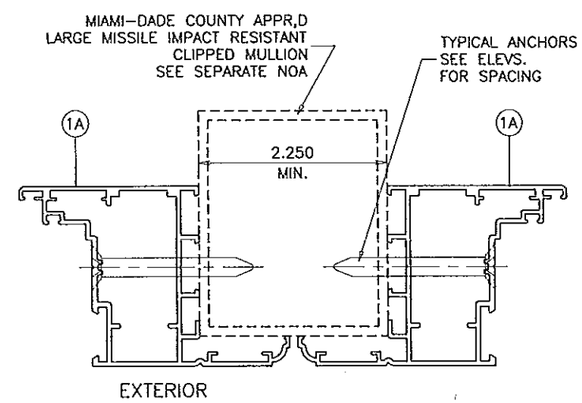

INSTALLATION DETAILS
FRAMES WITH 1-3/16" FLANGE

PRODUCT REVISED
as complying with the Florida
Building Code
Acceptance No 12-1231.06
Expiration Date 7/3/18
By Ishaq I. Chanda
Miami Dade Product Control

Engr: JAVAD AHMAD
CIVIL
FLA. PE # 70592
C.A.N. 3538

JUL 15 2013

AL-FAROOQ CORPORATION
ENGINEERS & PRODUCT DEVELOPMENT
1235 S.W. 87 AVE
MIAMI, FLORIDA 33174
TEL. (305) 264-8100 FAX. (305) 262-6978

COMP-ANL\W08-31KUI

SERIES KA ALUMINUM OUTSWING FRENCH DOOR (L.M.I.)

KORUS USA, INC.
8615 N.W. 64 STREET BAY #1
MIAMI, FL. 33166
TEL. (954) 874-7040 FAX. (954) 874-7049

revisions:

no	date	by	description
B	10.30.12		GENERAL REVISION
C	03.04.13		NO CHANGE THIS SHEET
D	06.04.13		REV. PER RER COMMENTS
E	07.12.13		REV. PER RER COMMENTS

date: 03-25-08
scale: 1/2" = 1"
dr. by: HAMID
chk. by:

drawing no.
W08-31

sheet 6 of 8

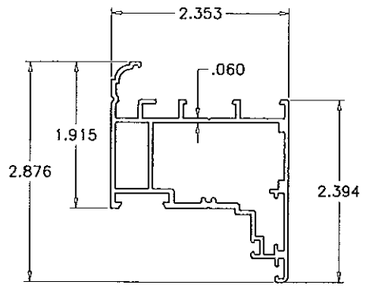

1 DOOR FRAME (1/2" FLANGE)

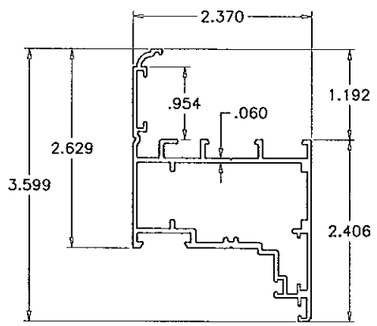

1A DOOR FRAME (1-3/16" FLANGE)

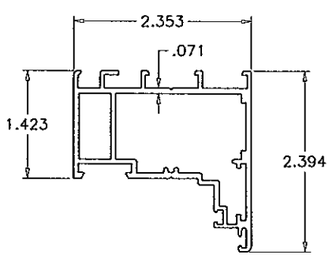

1B DOOR FRAME (WITHOUT FLANGE)

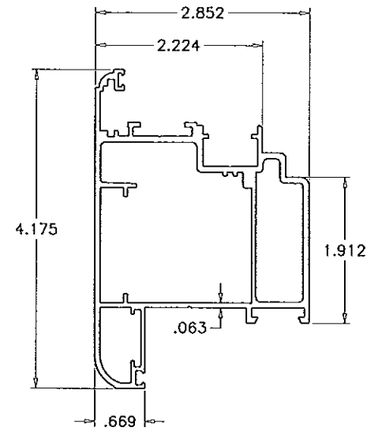

2 LEAF FRAME

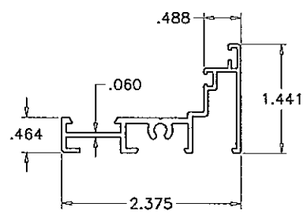

3 THRESHOLD

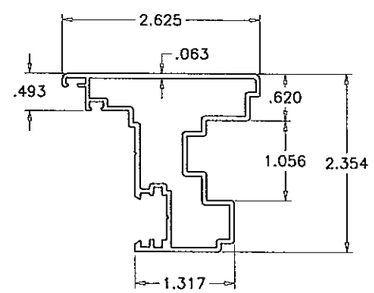

4 ASTRAGAL

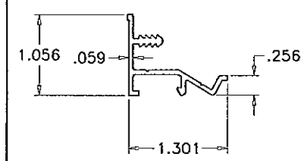

5 GLASS STOP

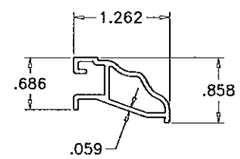

6 GLASS STOP COVER

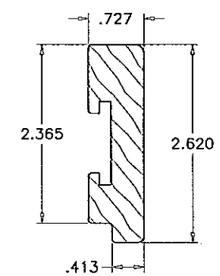

17 INTERIOR FRAME COVER

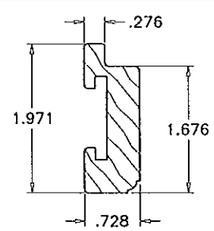

18 INTERIOR LEAF COVER

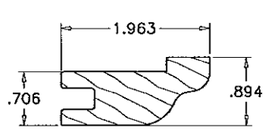

19 INTERIOR GLASS STOP COVER

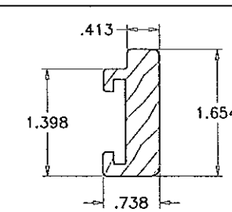

20 INTERIOR SILL COVER

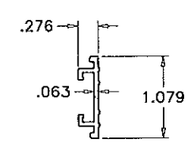

21 COVER RECEIVER CHANNEL

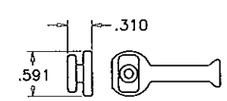

22 COVER LATCH

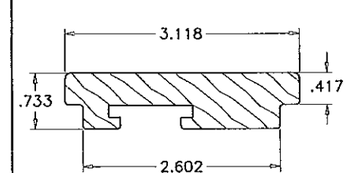

23 INTERIOR ASTRAGAL COVER

ITEM	PART #	QUANTITY	DESCRIPTION	MATERIAL	MANF./SUPPLIER/REMARKS
1	KA025	4/ DOOR	DOOR FRAME (1/2" FLANGE)	6060-T5	KORUS
1A	KA016	4/ DOOR	DOOR FRAME (1-3/16" FLANGE)	6060-T5	KORUS
1B	KA012	4/ DOOR	DOOR FRAME (WITHOUT FLANGE)	6060-T5	KORUS
2	KA015	4/ LEAF	LEAF FRAME	6060-T5	KORUS
3	KA008	1	THRESHOLD	6060-T5	KORUS
4	KA003	1	ASTRAGAL	6060-T5	KORUS
5	KA006	4/ LEAF	GLASS STOP	6060-T5	KORUS
6	KA007	AS REQD.	GLASS STOP COVER	6060-T5	KORUS
7	COP8069	4/ LEAF	EXTERIOR GLAZING GASKET	EPDM	COMPLASTEX
8	COPOUP4W	4/ LEAF	INTERIOR GLAZING GASKET	EPDM	COMPLASTEX
8A	COPOUP5W	4/ LEAF	INTERIOR GLAZING GASKET	EPDM	COMPLASTEX
8B	COPOUP6W	4/ LEAF	INTERIOR GLAZING GASKET	EPDM	COMPLASTEX
9	COP2217	AS REQD.	GLASS STOP HOOK GASKET	EPDM	COMPLASTEX
10	COP02666	AS REQD.	EXTERIOR FRAME GASKET	EPDM	COMPLASTEX
11	ALF7340	AS REQD.	INTERNAL GASKET	EPDM	ALFASOLARE
12	FAP5603A	3/ LEAF	HINGE	CAST ALUM	FAPIM
13	MON5007	AS REQD.	LEAF JOINING BRACKET	CAST ALUM	MONTICELLI
14	MON5002	AS REQD.	FRAME JOINING BRACKET	CAST ALUM	MONTICELLI
15	SIG896068	AS REQD.	CORNER JOINT	STEEL	SIEGENIA
16	PONK20	AS REQD.	ALIGNING BRACKET	PA6	PONTINA STAMPI
17	–	AS REQD.	INTERIOR FRAME COVER	–	–
18	–	AS REQD.	INTERIOR LEAF COVER	–	–
19	–	AS REQD.	INTERIOR GLASS STOP COVER	–	–
20	–	AS REQD.	INTERIOR SILL COVER	–	–
21	C71808	AS REQD.	COVER RECEIVER CHANNEL (CONT.)	6060-T5	KORUS
22	PS002	AS REQD.	COVER LATCH AT 12" O.C.	CAST ALUM	MONTICELLI
23	–	AS REQD.	INTERIOR ASTRAGAL COVER	–	–
24	#6 X 3/4"	1/ LATCH	LATCH INSTALLATION SCREWS	–	FH SMS
25	COP020250	AS REQD.	FRAME W'STRIPPING GASKET	EPDM	COMPLASTEX
26	–	1	MULTI POINT LOCK, SEE SHEET 2.1	–	SIEGENIA

PRODUCT REVISED
as complying with the Florida
Building Code
Acceptance No 12-1231.06
Expiration Date 7/3/18
By [illegible]
Miami Dade Product Control

Engr: JAVAD AHMAD
CIVIL
FLA. PE # 70592
C.A.N. 3538

JUL 15 2013

AL-FAROOQ CORPORATION
ENGINEERS & PRODUCT DEVELOPMENT
1235 S.W. 87 AVE
MIAMI, FLORIDA 33174
TEL. (305) 264-8100 FAX. (305) 262-6978
COMP-ANL\W08-31KUI

SERIES KA ALUMINUM OUTSWING FRENCH DOOR (L.M.I.)

KORUS USA, INC.
8615 N.W. 64 STREET BAY #1
MIAMI, FL. 33166
TEL. (954) 874-7040 FAX. (954) 874-7049

revisions:

no	date	by	description
A	11.10.08		INTERIOR WOOD COVERS ADDED
B	10.30.12		GENERAL REVISION
C	03.04.13		NO CHANGE THIS SHEET
D	06.04.13		REV. PER RER COMMENTS
E	07.12.13		REV. PER RER COMMENTS

date: 03-25-08
scale: 1/2" = 1"
dr. by: HAMID
chk. by:

drawing no.
W08-31

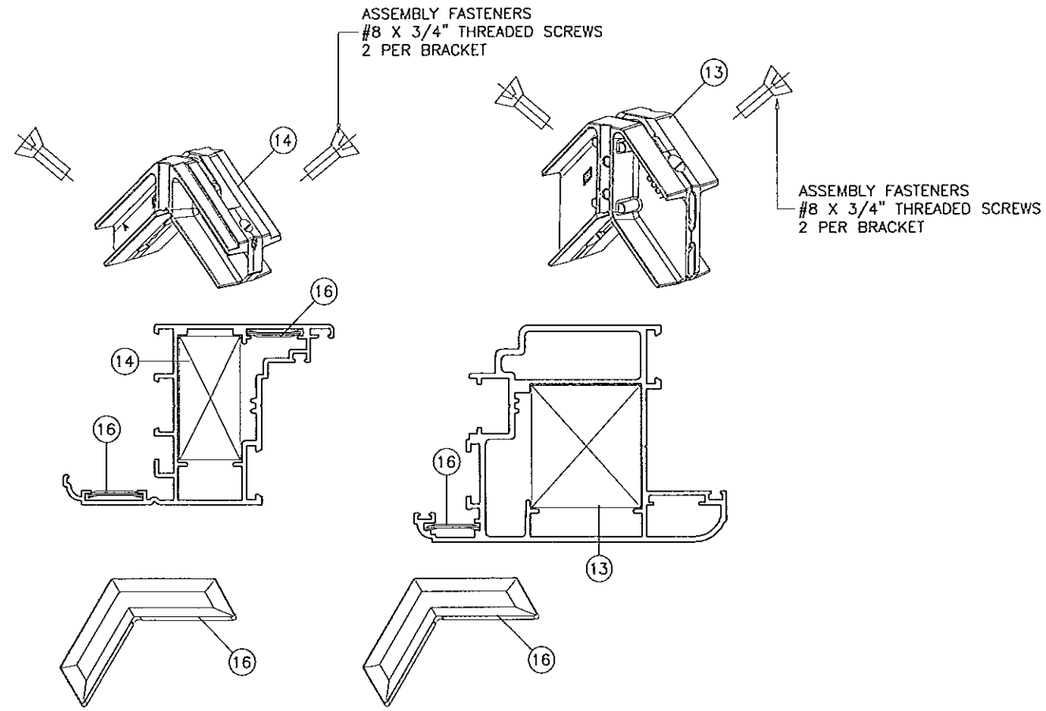

FRAME CORNER

LEAF CORNER

MITER CUT FRAME AND LEAF CORNERS

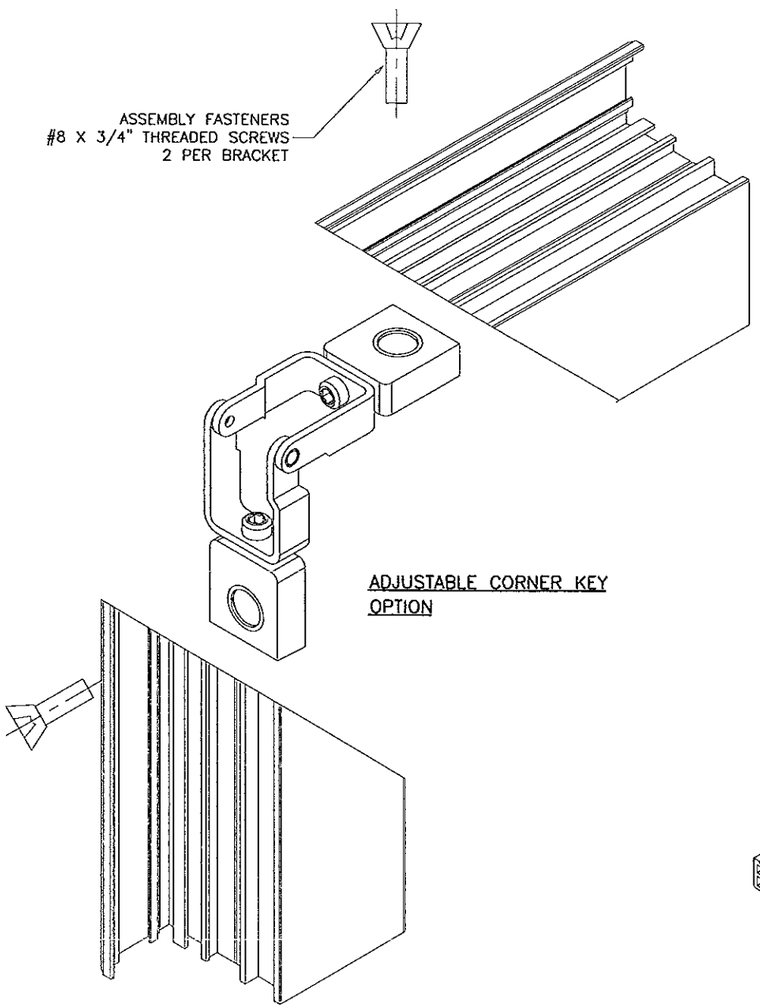

ADJUSTABLE CORNER KEY OPTION

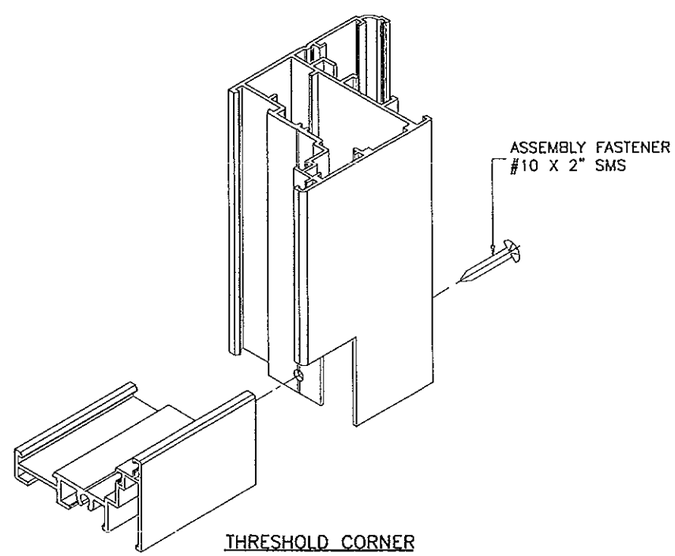

THRESHOLD CORNER

PRODUCT REVISED
as complying with the Florida Building Code
Acceptance No. 12-1231.06
Expiration Date July 03, 2018
By Ishaq I. Chand
Miami Dade Product Control

Engr: JAVAD AHMAD
CIVIL
FLA. PE # 70592
C.A.N. 3538

JUL 15 2013

AL-FAROOQ CORPORATION
ENGINEERS & PRODUCT DEVELOPMENT
1235 S.W. 87 AVE
MIAMI, FLORIDA 33174
TEL. (305) 264-8100 FAX. (305) 262-6978

COMP-ANL\W08-31KU

SERIES KA ALUMINUM OUTSWING FRENCH DOOR (L.M.I.)

KORUS USA, INC.
8615 N.W. 64 STREET BAY #1
MIAMI, FL. 33166
TEL. (954) 874-7040 FAX. (954) 874-7049

revisions:

no	date	by	description
A	11.10.08		INTERIOR WOOD COVERS ADDED
B	10.30.12		GENERAL REVISION
C	03.04.13		NO CHANGE THIS SHEET
D	06.04.13		REV. PER RER COMMENTS
E	07.12.13		NO CHANGE THIS SHEET

date: 03-25-08
scale: 1/2" = 1"
dr. by: HAMID
chk. by:

drawing no.
W08-31

sheet 8 of 8