MIAMI-DADE COUNTY
DEPARTMENT OF REGULATORY AND ECONOMIC RESOURCES (RER)
BOARD AND CODE ADMINISTRATION DIVISION

MIAMI-DADE COUNTY
PRODUCT CONTROL SECTION
11805 SW 26 Street, Room 208
Miami, Florida 33175-2474
T (786) 315-2590 F (786) 315-2599
www.miamidade.gov/economy

NOTICE OF ACCEPTANCE (NOA)

Spray Rock Building Systems, LLC
701 W. Cypress Creek Road, Ste. 102
Ft. Lauderdale, Florida 33309

SCOPE:
This NOA is being issued under the applicable rules and regulations governing the use of construction materials. The documentation submitted has been reviewed and accepted by Miami-Dade County RER- Product Control Section to be used in Miami Dade County and other areas where allowed by the Authority Having Jurisdiction (AHJ).

This NOA shall not be valid after the expiration date stated below. The Miami-Dade County Product Control Section (In Miami Dade County) and/or the AHJ (in areas other than Miami Dade County) reserve the right to have this product or material tested for quality assurance purposes. If this product or material fails to perform in the accepted manner, the manufacturer will incur the expense of such testing and the AHJ may immediately revoke, modify, or suspend the use of such product or material within their jurisdiction. RER reserves the right to revoke this acceptance, if it is determined by Miami-Dade County Product Control Section that this product or material fails to meet the requirements of the applicable building code.

This product is approved as described herein, and has been designed to comply with the High Velocity Hurricane Zone of the Florida Building Code.

DESCRIPTION: "Stand Up Wall System"

APPROVAL DOCUMENT: Drawing No. 12-146, titled "Stand Up Wall System ", sheets 1 through 16 of 16, prepared by Tilteco, Inc., dated December 19, 2012, last revision #2 dated March 14, 2013, signed and sealed by Walter A. Tillit Jr., P.E., on March 15, 2013, bearing the Miami-Dade County Product Control Approval stamp with the Notice of Acceptance number and the approval date by Miami-Dade County Product Control Section.

MISSILE IMPACT RATING: Large and Small Missile Impact Resistant

LABELING: Each panel shall bear a permanent label with the manufacturer's name or logo, Stuart, Florida and the following statement: "Miami-Dade County Product Control Approved", unless otherwise noted herein.

RENEWAL of this NOA shall be considered after a renewal application has been filed and there has been no change in the applicable building code negatively affecting the performance of this product.

TERMINATION of this NOA will occur after the expiration date or if there has been a revision or change in the materials, use, and/or manufacture of the product or process. Misuse of this NOA as an endorsement of any product, for sales, advertising or any other purposes shall automatically terminate this NOA. Failure to comply with any section of this NOA shall be cause for termination and removal of NOA.

ADVERTISEMENT: The NOA number preceded by the words Miami-Dade County, Florida, and followed by the expiration date may be displayed in advertising literature. If any portion of the NOA is displayed, then it shall be done in its entirety.

INSPECTION: A copy of this entire NOA shall be provided to the user by the manufacturer or its distributors and shall be available for inspection at the job site at the request of the Building Official.

This NOA consists of this page 1, evidence submitted page E-1 as well as approval document mentioned above. The submitted documentation was reviewed by **Helmy A. Makar, P.E., M.S.**

MIAMI-DADE COUNTY APPROVED

03/28/2013

NOA No. 13-0107.04
Expiration Date: 03/28/2018
Approval Date: 03/28/2013

NOTICE OF ACCEPTANCE: EVIDENCE SUBMITTED

A. DRAWINGS

1. *Drawing No. 12-146, titled "Stand Up Wall System", sheets 1 through 16 of 16, prepared by Tilteco, Inc., dated December 19, 2012, last revision #2 dated March 14, 2013, signed and sealed by Walter A. Tillit, Jr., P.E., on March 15, 2013.*

B. TESTS

1. *Test reports on Uniform Static Air Pressure Test, per TAS- 202-94, Cyclic Test Pressure per TAS-203, and Impact Test per TAS-201, Racking Load Test per ASTM E-72, along with marked-up drawings and installation diagram of wall panel, prepared by Blackwater Testing, Inc., Test Report No. BT-SR-12-001, dated December 05, 2012, signed and sealed by Yamil G. Kuri, P.E., on December 12, 2012.*

C. CALCULATIONS

1. *Calculation titled "Stand Up Wall System", 13 pages, prepared by Tilteco. Inc., dated December 21, 2012, signed and sealed by Walter A. Tillit Jr., P.E.*

D. QUALITY ASSURANCE

1. *By Miami-Dade County Department of Regulatory and Economic Resources.*

E. MATERIAL CERTIFICATIONS

1. *None.*

F. OTHERS

1. *Compliance letter by Tilteco, Inc., dated December 20, 2012, signed and sealed by Walter A. Tillit, Jr., P.E., certifying that this product complies with the 2010 Florida Building Code.*

Hemy A. Makar, P.E., M.S.
Product Control Unit Supervisor
NOA No. 13-0107.04
Expiration Date: 03/28/2018
Approval Date: 03/28/2013

GENERAL NOTES:

1. THIS PRODUCT APPROVAL DOCUMENT (P.A.D.) APPLIES ONLY TO THE STRUCTURAL WALL PANELS INDICATED AND SPECIFIED ON THIS DRAWING, WHICH HAVE BEEN VERIFIED FOR COMPLIANCE IN ACCORDANCE WITH THE 2010 EDITION OF THE FLORIDA BUILDING CODE.

   DESIGN WIND LOADS SHALL BE DETERMINED AS PER SECTION **1620** OF THE ABOVE MENTIONED CODE, USING ASCE 7-10 FOR INSTALLATIONS AND SHALL NOT EXCEED THE MAXIMUM (A.S.D.) DESIGN PRESSURE RATINGS & LOAD CAPACITIES INDICATED ON THIS SHEET.

   IN ORDER TO VERIFY THE ABOVE CONDITION, ULTIMATE DESIGN WIND LOADS DETERMINED PER ASCE 7-10 SHALL BE FIRST REDUCED TO A.S.D. DESIGN WIND LOADS BY MULTIPLYING THEM BY 0.6 IN ORDER TO COMPARE THESE W/ MAX. (A.S.D.) DESIGN PRESSURE RATINGS & LOAD CAPACITIES INDICATED ON THIS SHEET.

   DESIGN DEAD AND LIVE LOADS SHALL BE DETERMINED IN ACCORDANCE WITH SECTIONS **1612**, **1615** AND **1616** OF THE FLORIDA BUILDING CODE.

2. BUILDING DIMENSIONS, DETAILS, UPLIFT, OVERTURNING, FOUNDATION, ROOF AND OTHER ELEMENTS WHERE WALL PANELS WILL BE INSTALLED SHALL BE DESIGNED BY A FLORIDA REGISTERED PROFESSIONAL ENGINEER OR ARCHITECT AND REVIEWED BY THE STRUCTURAL PLANS EXAMINER OF THE CORRESPONDING BUILDING DEPARTMENT IN ORDER TO ISSUE A PERMIT FOR CONSTRUCTION.

3. ALL ELECTRICAL, MECHANICAL DETAILS AND PARTS AND FIRE RATING PROVISIONS ARE NOT PART OF THIS APPROVAL AND SHALL BE PREPARED BY A FLORIDA REGISTERED PROFESSIONAL ENGINEER AND REVIEWED BY THE CORRESPONDING BUILDING DEPARTMENT IN ORDER TO ISSUE A PERMIT FOR CONSTRUCTION.

4. ALL COMPONENTS FOR THIS PRODUCT SHALL BE AS INDICATED ON COMPONENTS ON SHEET 3 AND AT BILL OF MATERIALS ON SHEET 2.

5. ALL SCREWS AT COMPONENT # 4 SHALL BE CORROSION RESISTANT AS PER DIN 50018 AND SHALL COMPLY W/ FLORIDA BUILDING CODE SECTION 2411.3.3.4.

6. WALL PANEL SYSTEM IS DESIGNED TO BE INSTALLED AS AN EXTERIOR BEARING OR NON BEARING WALL:

6.1 WHEN INSTALLED AS A BEARING WALL, PANEL SHALL BE LATERALLY SUPPORTED BY A CONCRETE SLAB AND FOUNDATION AT THE BOTTOM, AND ROOF TRUSSES OR RAFTERS WITH SHEATHING AT TOP, AT A SPACINGS NOT TO EXCEED 24" ON CENTERS. WALL CONNECTION TO ROOF SYSTEM SHALL BE PERFORMED BY A FLORIDA REGISTERED PROFESSIONAL ENGINEER OR ARCHITECT AND REVIEWED BY THE STRUCTURAL PLANS EXAMINER OF THE CORRESPONDING BUILDING DEPARTMENT IN ORDER TO ISSUE A PERMIT FOR CONSTRUCTION. STRUCTURAL DESIGN SHALL INCLUDE PROVISIONS FOR ALL LOADS DEVELOPED AT THE JOINT BETWEEN WALL PANELS AND ROOF SYSTEM.

6.2 WHEN INSTALLED AS A NON BEARING WALL, PANEL SHALL BE LATERALLY SUPPORTED BY CONCRETE SLABS/BEAMS, WOOD OR STEEL STRUCTURAL BEAMS. SPACING BETWEEN LATERAL SUPPORT SHALL NOT TO EXCEED 24" ON CENTERS ON BUILDINGS WITHOUT A CONCRETE SLAB. FOR BUILDINGS WITH CONCRETE SLABS OR CONTINUOS CONCRETE BEAMS, INSTALLATION SHALL BE AS PER SECTION X-X, SHEET 4. STRUCTURAL ADEQUACY OF EXISTING BUILDING SHALL BE VERIFIED BY THE PERMIT HOLDER.

6.3 MAXIMUM A.S.D. ALLOWABLES: OBTAINED THRU TESTING PERFORMED AS PER TAS 201, 202, 203 AND ASTM E-72, AS PER BLACKWATER TESTING INC REPORT # BT-SR-12-001:
LARGE MISSILE IMPACT RESISTANT: 50 FT/SEC. MISSILE SPEED.
MAXIMUM PANEL HEIGHT: 144"
MAXIMUM PANEL WIDTH: 96" @ SOLID PANELS & 144" @ PANELS W/ OPENINGS.
MAXIMUM A.S.D. COMPRESSION LOAD PER PANEL W/ OPENINGS : 10000 Lb (833 Lb/FT)
MAXIMUM A.S.D. COMPRESSION LOAD PER SOLID PANEL : 9360 Lb (1170 Lb/FT)
MAXIMUM A.S.D. TENSION LOAD PER PANEL W/ OPENINGS : 10000 Lb (833 Lb/FT)
MAXIMUM A.S.D. TENSION LOAD PER SOLID PANEL : 8800 Lb (1100 Lb/FT)
MAXIMUM A.S.D. RACKING LOAD PER PANEL: 2730 Lb (340 Lb/FT)
MAXIMUM LATERAL A.S.D. DESIGN PRESSURE RATING FOR PANELS WITH OR W/O OPENINGS : ±100.0 psf

6.4 ONLY SOLID PANELS (WITH NO OPENINGS) SHALL BE CONSIDERED TO RESIST THE RACKING FORCES.

7. COMPONENT 9 SHALL COMPLY W/ ACI 506 & 318-08 STANDARDS & SECTIONS 1920, 1922, 1924, 1926 & 1929 OF THE FLORIDA BUILDING CODE.

8. (a) THIS P.A.D. PREPARED BY THIS ENGINEER IS GENERIC AND DOES NOT PROVIDE INFORMATION FOR A SITE SPECIFIC PROJECT; i.e. WHERE THE SITE CONDITIONS DEVIATE FROM THE P.A.D.

   (b) CONTRACTOR TO BE RESPONSIBLE FOR THE SELECTION, PURCHASE AND INSTALLATION INCLUDING LIFE SAFETY OF THIS PRODUCT BASED ON THIS P.A.D. PROVIDED HE/SHE DOES NOT DEVIATE FROM THE CONDITIONS DETAILED ON THIS DOCUMENT. CONSTRUCTION SAFETY AT SITE IS THE CONTRACTOR'S RESPONSIBILITY.

   (c) THIS P.A.D. WILL BE CONSIDERED INVALID IF MODIFIED.

   (d) SITE SPECIFIC PROJECTS SHALL BE PREPARED BY A FLORIDA REGISTERED ENGINEER OR ARCHITECT WHICH WILL BECOME THE PROFESSIONAL OF RECORD (P.O.R.) FOR THE PROJECT AND WHO WILL BE RESPONSIBLE FOR THE PROPER USE OF THE P.A.D. PROFESSIONAL OF RECORD, ACTING AS A DELEGATED ENGINEER TO THE P.A.D. ENGINEER SHALL SUBMIT TO THIS LATTER THE SITE SPECIFIC DRAWINGS FOR REVIEW.

   (e) ORIGINAL P.A.D. SHALL BEAR THE DATE AND ORIGINAL SEAL AND SIGNATURE OF THE PROFESSIONAL ENGINEER THAT PREPARED IT.

9. A PERMANENT PANEL MANUFACTURER'S LABEL SHALL BE PLACED ON THE EXPOSED SURFACE OF THE PANEL. ONE LABEL SHALL BE PLACED FOR EVERY PANEL. LABEL SHALL READ AS FOLLOWS:
"STAND UP WALL SYSTEM"
SPRAY ROCK BUILDING SYSTEMS, LLC.
FOR LAUDERDALE, FLORIDA
MIAMI-DADE COUNTY PRODUCT CONTROL APPROVED.

FLORIDA BUILDING CODE (High Velocity Hurricane Zone)

Approved as complying with the Florida Building Code
Date 03/28/2013
NOA# 13-0107.04
Miami Dade Product Control
By
MIAMI DADE COUNTY

WALTER A. TILLIT JR. LICENSE No. 44167 STATE OF FLORIDA PROFESSIONAL ENGINEER
P.E. SEAL/SIGNATURE/DATE

©2012 TILTECO, INC.

TILTECO INC.
TILLIT TESTING & ENGINEERING COMPANY
8355 N.W. 36th. St., Ste. 305 - VIRGINIA GARDENS, FL 33166
Phone : (305)871-1530 . Fax : (305)871-1531
e-mail: tilteco@aol.com
EB-0006719
WALTER A. TILLIT Jr., P.E.
FLORIDA Lic. # 44167

SprayRock BUILDING SYSTEMS™
SPRAYROCK.COM

STAND UP WALL SYSTEM

SPRAY ROCK BUILDING SYSTEMS, LLC.
701 W. CYPRESS CREEK ROAD SUITE 102
FORT LAUDERDALE, FL 33309
PH: (954) 707-5000 FAX: (954) 707-5001

REV. No	DESCRIPTION	DATE	REV. No	DESCRIPTION	DATE
1	GENERAL	02/15/13	5	-	-
2	FINAL	03/14/13	6	-	-
3	-	-	7	-	-
4	-	-	8	-	-

A.G.
DRAWN BY:

12/19/12
DATE

12-146
DRAWING No

SHEET 1 OF 16

BILL OF MATERIALS

ITEM #	DESCRIPTION	REMARKS
1	STUD : 16 GAGE ASTM A-653 SQ GRADE 50, G 60 GALVANIZED COLD FORMED STEEL	USE AT ALL FRAME MEMBERS
2	5/16"x2 1/4" NUT EYE BOLT: HOT DIP GALVANIZED STEEL W/ 800 # WORKING TENSION CAPACITY	INCLUDES DOUBLE NUT, LOCATED AT 4 CORNERS /PANEL AT ENDS AND MID LENGTH OF TOP, BOTT. & INTERMEDIATE HORIZONTAL (20 PER PANEL)
3	1 LB/FT³ EXPANDED POLYSTYRENE BOARD	SEE DETAIL FOR MIN. DIMENSIONS, MANUFACTURED BY DYPLAST PRODUCTS LLC W/ MIAMI DADE COUNTY PRODUCT APPROVAL.
4	FRAME FASTENER: # 10 x 3/4" ZINC PLATED SELF DRILLING SHEET METAL STEEL SCREW	AS MANUFACTURED BY GRABBER CONCORD CA 94520 MODEL # F.P. 101875 LYZ
5	DEFORMED WIRE D-4.5 (0.239" Ø) W/ 85 ksi TENSILE STRENGTH & W/ 75 ksi YIELD STRENGTH, PER ASTM A-496.	MANUFACTURED BY WIRE PRODUCTS INC OF FLORIDA. INSTALLED IN PLACE USING (20) 2 FOR EACH 8' x 12' WALL PANEL. SEE TYPICAL PANEL ELEVATION ON SHEETS 6, 7, 12 & 13.
6	EXTERIOR WIRE MESH: 14 GAGE (0.075" Ø) ASTM A-641 2"x2" G-25 GALVANIZED CARBON STEEL WIRE W/ 60ksi TENSILE STRENGTH	MANUFACTURED BY WIRE PRODUCTS INC OF FLORIDA. TIED TO 5 AT LOCATIONS SHOWN ON TYPICAL PANEL ELEVATION ON SHEETS 7, 10 & 13.
7	FILLER SILL ANCHORS: 5/8" Ø x 6" LDT HARDENED CARBON STEEL GRADES ZINC PLATED SELF THREADING CONCRETE SCREW	MANUFACTURED BY RED HEAD, SPACED 24" O.C MAX . W/ 6 3/4" MIN. EDGE DISTANCE FROM LONG EDGE OF SLAB & AT 4" FROM EDGE OF PANEL AND 4 1/2" MIN. EMBEDMENT.
9	REINFORCED SHOTCRETE COVER, 3" THICK	f'c= 3500 psi @ 7 DAYS & 7000 psi @ 28 DAYS. REINFORCED W/ 5 & 6 SEE COMPONENT 9 ON SHEET 2
11	WATER PROOFING SELF-ADHERED MEMBRANE W/ MODEL GRACE ICE & WATER SHIELD	LOCATE @ SILL JOINT W/ SLAB, MANUFACTURED BY GRACE, USE ADHESIVE SIDE TO CONCRETE SLAB, USE 7" MIN. WIDE MEMBRANE. SEE DETAIL "Z" ON SHEET 4.

FLORIDA BUILDING CODE (High Velocity Hurricane Zone)

Approved as complying with the Florida Building Code
Date 03/28/2013
NOA# 13-0107.04
Miami Dade Product Control
By
MIAMI DADE COUNTY

WALTER A. TILLIT JR. LICENSE No. 44167 STATE OF FLORIDA PROFESSIONAL ENGINEER
P.E. SEAL/SIGNATURE/DATE

©2012 TILTECO, INC.

TILTECO INC.
TILLIT TESTING & ENGINEERING COMPANY
6355 N.W. 36th. St., Ste. 305 – WRONSA GARDENS, FL 33166
Phone : (305)871-1530 . Fax : (305)871-1531
e-mail: tilteco@aol.com
EB-0006719
WALTER A. TILLIT Jr., P.E.
FLORIDA Lic. # 44167

SprayRock BUILDING SYSTEMS™
SPRAYROCK.COM

STAND UP WALL SYSTEM

SPRAY ROCK BUILDING SYSTEMS, LLC.
701 W. CYPRESS CREEK ROAD SUITE 102
FORT LAUDERDALE, FL 33309
PH: (954) 707-5000 FAX: (954) 707-5001

REV. No	DESCRIPTION	DATE	REV. No	DESCRIPTION	DATE
1	GENERAL	02/15/13	5	–	–
2	FINAL	03/14/13	6	–	–
3	–	–	7	–	–
4	–	–	8	–	–

A.G.
DRAWN BY:

12/19/12
DATE

12-146
DRAWING No

SHEET 2 OF 18

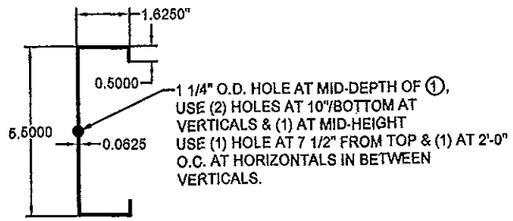

1 STUD
N.T.S

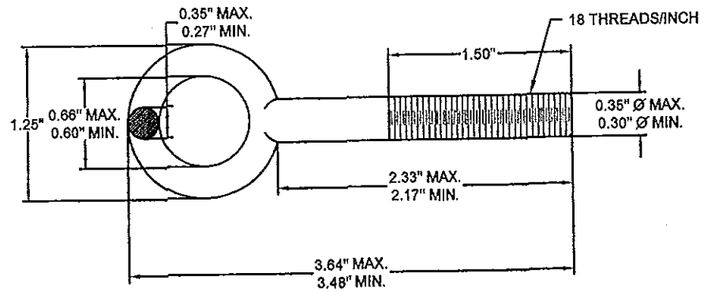

2 5/16"x 2 1/4" NUT EYE BOLT
N.T.S

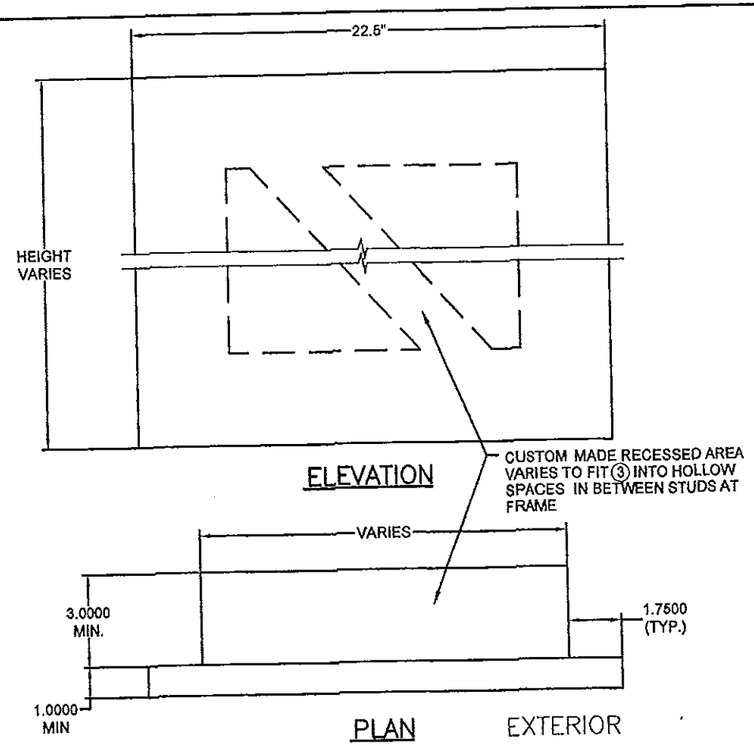

3 EXPANDED POLYSTYRENE BOARD
N.T.S

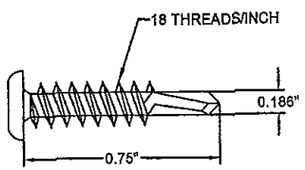

4 FRAME FASTENER
N.T.S

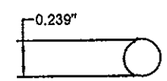

5 DEFORMED WIRE D-4.5
N.T.S.

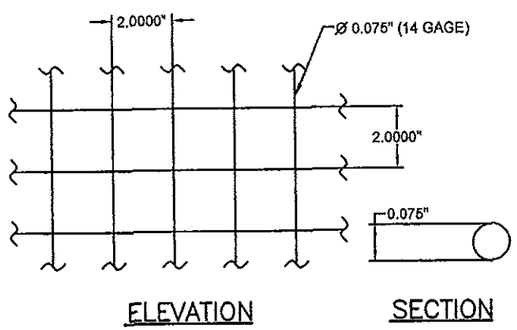

6 EXTERIOR WIRE MESH
N.T.S.

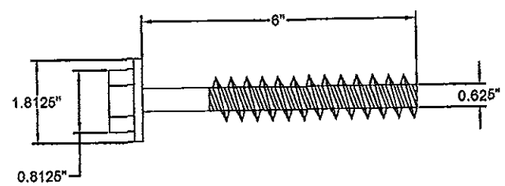

7 FILLER SILL ANCHOR
N.T.S.

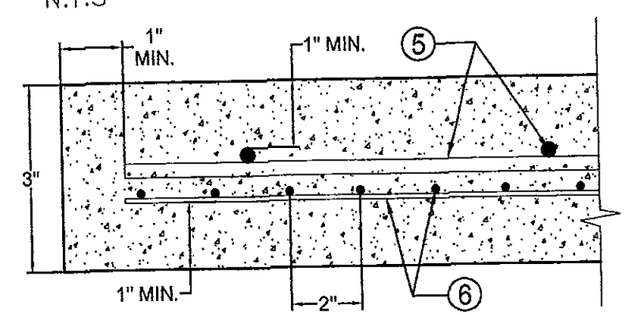

9 REINFORCED CONCRETE COVER
N.T.S.

COMPONENTS

FLORIDA BUILDING CODE (High Velocity Hurricane Zone)

Approved as complying with the Florida Building Code
Date 03/28/2013
NOA# 13-0107.04
Miami Dade Product Control
By
MIAMI DADE COUNTY

WALTER A. TILLIT JR. LICENSE No. 44167 STATE OF FLORIDA PROFESSIONAL ENGINEER
P.E. SEAL/SIGNATURE/DATE

©2012 TILTECO, INC.

TILTECO INC.
TILLIT TESTING & ENGINEERING COMPANY
6355 N.W. 36th. St., Ste. 305 - VIRGINIA GARDENS, FL 33166
Phone : (305)871-1530 . Fax : (305)871-1531
e-mail: tilteco@aol.com
EB-0006719
WALTER A. TILLIT Jr., P.E.
FLORIDA Lic. # 44167

SprayRock BUILDING SYSTEMS™
SPRAYROCK.COM

STAND UP WALL SYSTEM

SPRAY ROCK BUILDING SYSTEMS, LLC.
701 W. CYPRESS CREEK ROAD SUITE 102
FORT LAUDERDALE, FL 33309
PH: (954) 707-5000 FAX: (954) 707-5001

REV. No	DESCRIPTION	DATE	REV. No	DESCRIPTION	DATE
1	GENERAL	02/15/13	5	--	--
2	FINAL	03/14/13	6	--	--
3	--	--	7	--	--
4	--	--	8	--	--

A.G.
DRAWN BY:
12/19/12
DATE
12-146
DRAWING No
SHEET 3 OF 16

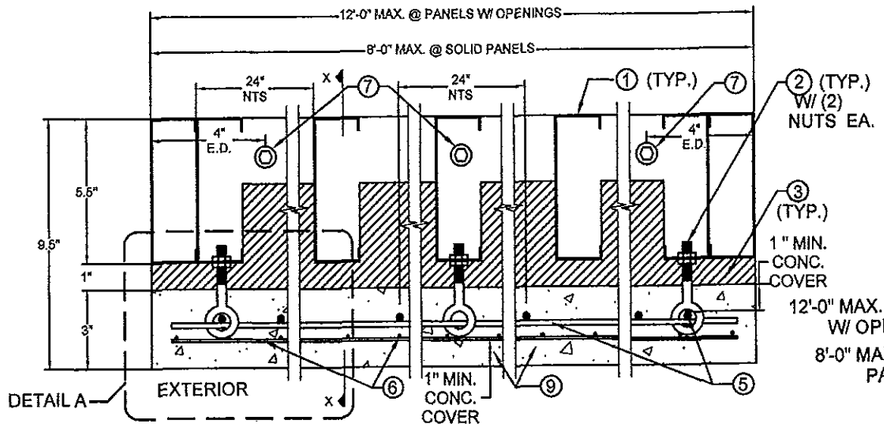

TYPICAL HORIZONTAL SECTION Y–Y AT PANEL

N.T.S.

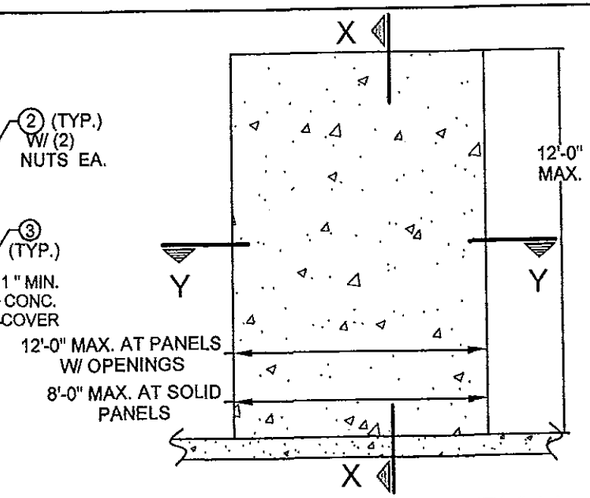

TYPICAL PANEL ELEVATION (EXTERIOR)

N.T.S.

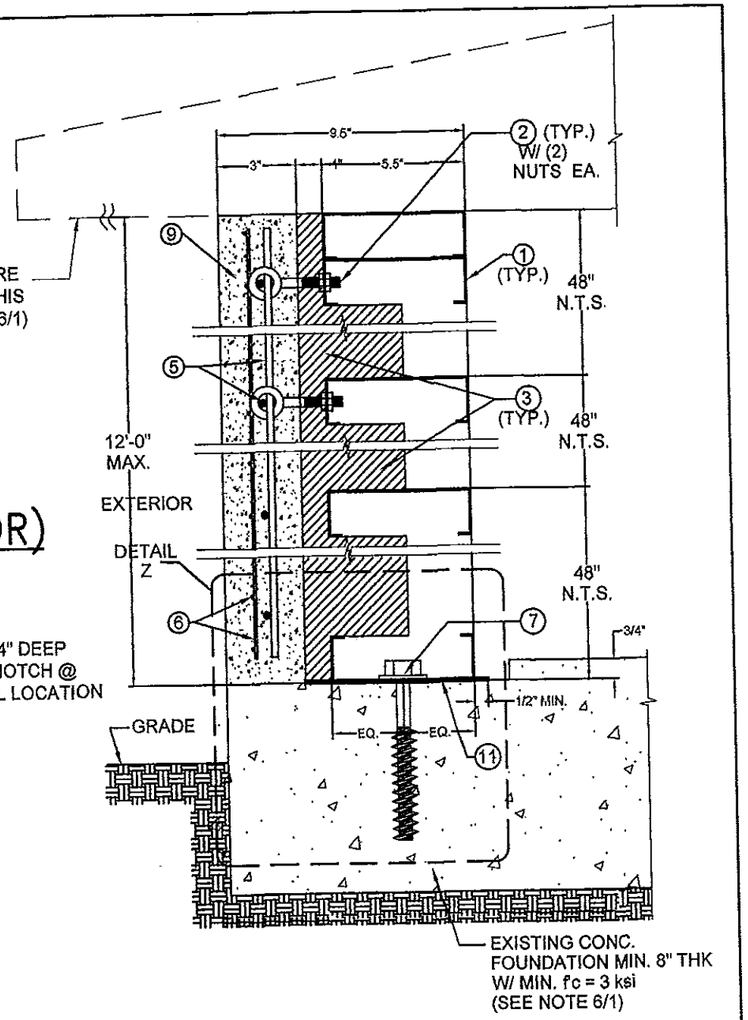

TYPICAL VERTICAL SECTION X–X AT PANEL

N.T.S.

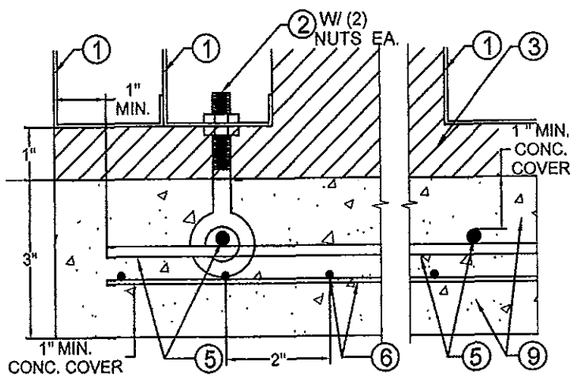

DETAIL "A"

N.T.S.

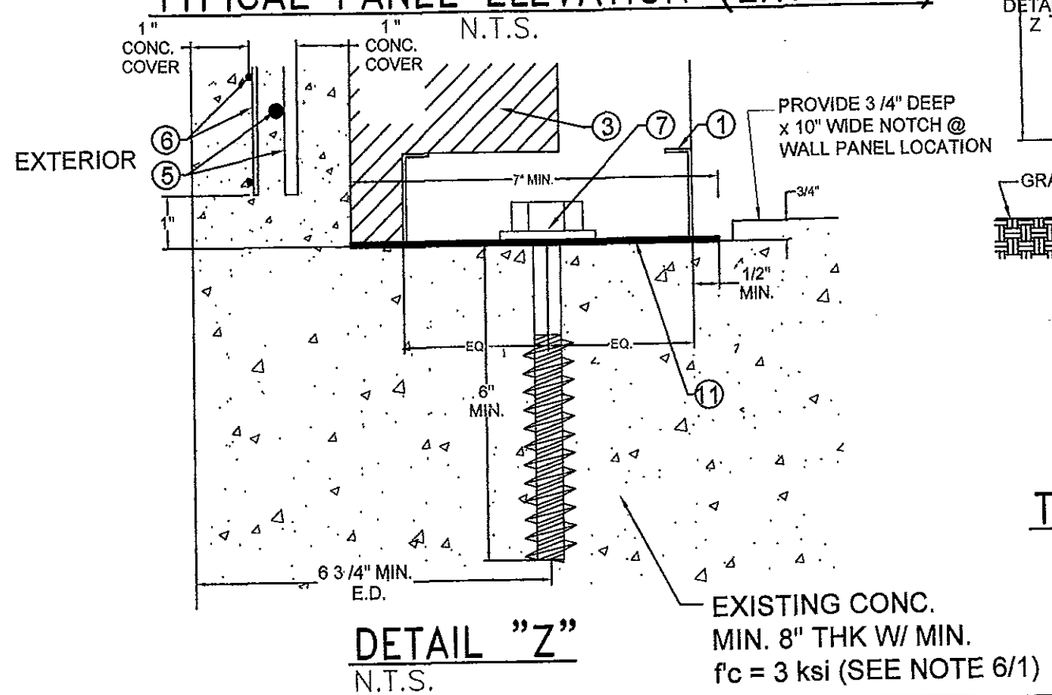

DETAIL "Z"

N.T.S.

FLORIDA BUILDING CODE (High Velocity Hurricane Zone)

Approved as complying with the Florida Building Code
Date 03/28/2013
NOA# 13-0107.04
Miami Dade Product Control
By

MIAMI DADE COUNTY

WALTER A. TILLIT JR. LICENSE No. 44167 STATE OF FLORIDA PROFESSIONAL ENGINEER

P.E. SEAL/SIGNATURE/DATE

©2012 TILTECO, INC.

TILTECO INC.
TILLIT TESTING & ENGINEERING COMPANY
6355 N.W. 36th. St., Ste. 305 – VIRGINIA GARDENS, FL 33166
Phone : (305)871-1530 . Fax : (305)871-1531
e-mail: titeco@aol.com
EB-0006719
WALTER A. TILLIT Jr., P.E.
FLORIDA Lic. # 44167

SprayRock BUILDING SYSTEMS™
SPRAYROCK.COM

STAND UP WALL SYSTEM

SPRAY ROCK BUILDING SYSTEMS, LLC.
701 W. CYPRESS CREEK ROAD SUITE 102
FORT LAUDERDALE, FL 33309
PH: (954) 707-5000 FAX: (954) 707-5001

REV. No	DESCRIPTION	DATE	REV. No	DESCRIPTION	DATE
1	GENERAL	02/15/13	5	–	–
2	FINAL	03/14/13	6	–	–
3	–	–	7	–	–
4	–	–	8	–	–

A.G. DRAWN BY:	
12/19/12 DATE	
12-146 DRAWING No	
SHEET 4 OF 16	

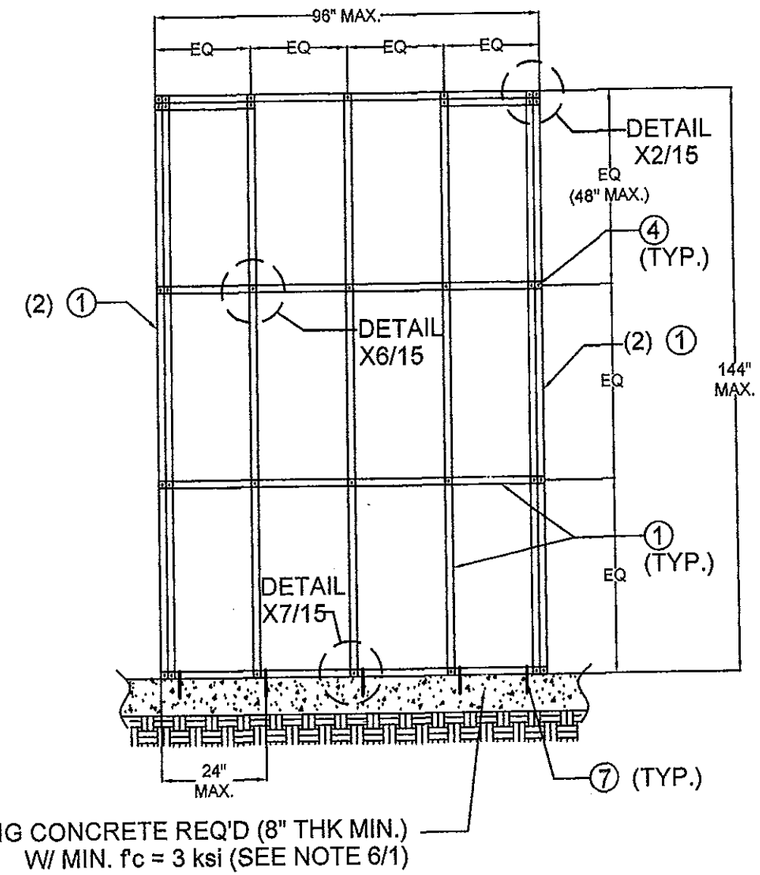

TYPICAL SINGLE SOLID PANEL FRAMING ELEVATION W/ 1

N.T.S.

FLORIDA BUILDING CODE (High Velocity Hurricane Zone)

Approved as complying with the Florida Building Code
Date 03/28/2013
NOA# 13-0107.04
Miami Dade Product Control
By
MIAMI DADE COUNTY

WALTER A. TILLIT JR. LICENSE No. 44167 STATE OF FLORIDA PROFESSIONAL ENGINEER

P.E. SEAL/SIGNATURE/DATE

©2012 TILTECO, INC.

TILTECO INC.
TILLIT TESTING & ENGINEERING COMPANY
6355 N.W. 36th. St., Ste. 305 – VIRGINIA GARDENS, FL 33166
Phone : (305)871-1530 . Fax : (305)871-1531
e-mail: tilteco@aol.com
EB-0006719
WALTER A. TILLIT Jr., P.E.
FLORIDA Lic. # 44167

SprayRock BUILDING SYSTEMS™
SPRAYROCK.COM

STAND UP WALL SYSTEM

SPRAY ROCK BUILDING SYSTEMS, LLC.
701 W. CYPRESS CREEK ROAD SUITE 102
FORT LAUDERDALE, FL 33309
PH: (954) 707-5000 FAX: (954) 707-5001

REV. No	DESCRIPTION	DATE	REV. No	DESCRIPTION	DATE
1	GENERAL	02/15/13	5	–	–
2	FINAL	03/14/13	6	–	–
3	–	–	7	–	–
4	–	–	8	–	–

A.G.
DRAWN BY:

12/19/12
DATE

12-146
DRAWING No

SHEET 5 OF 16

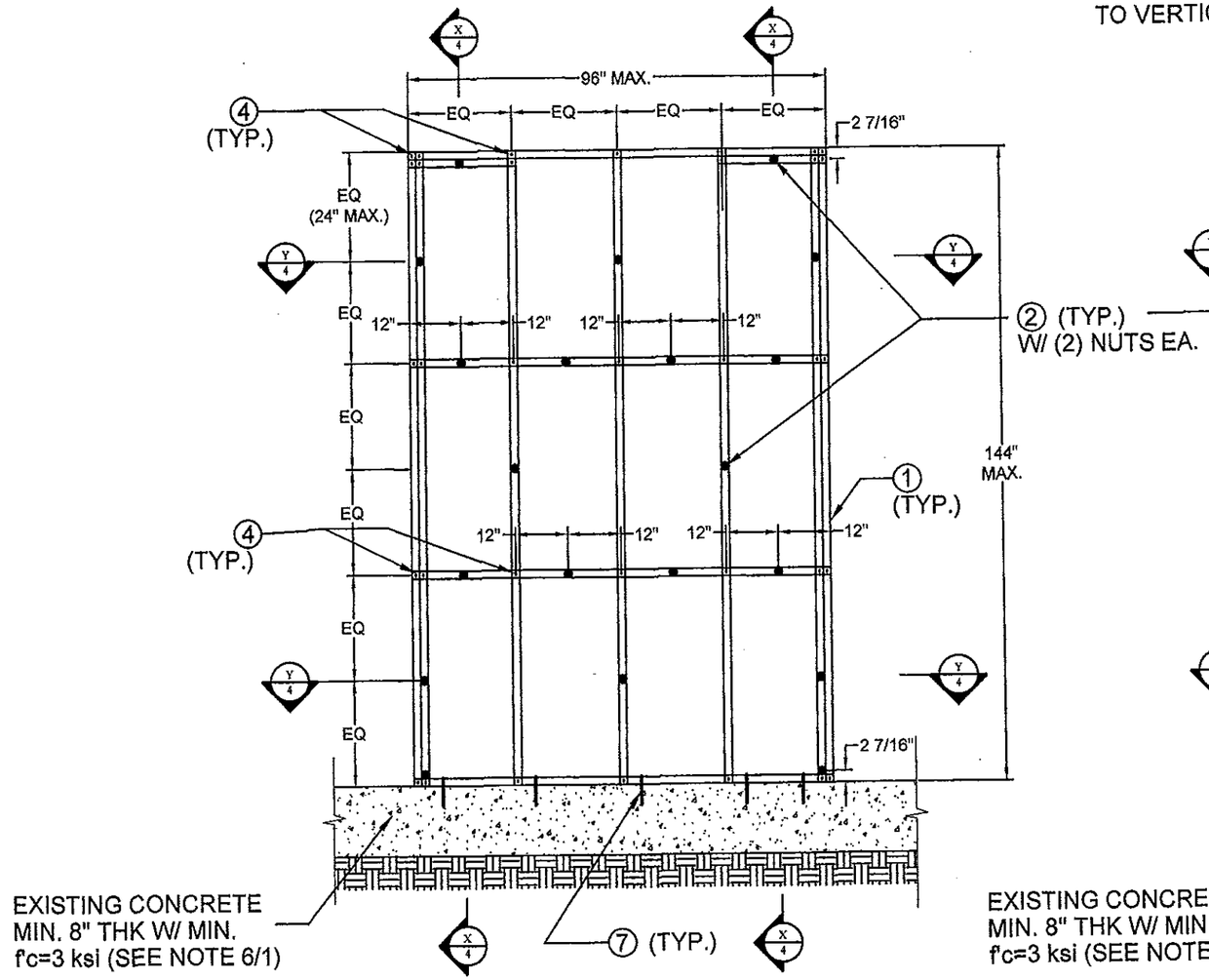

TYPICAL SINGLE SOLID PANEL ELEVATION W/ ② LAYOUT OVER ① (EXTERIOR)

N.T.S.

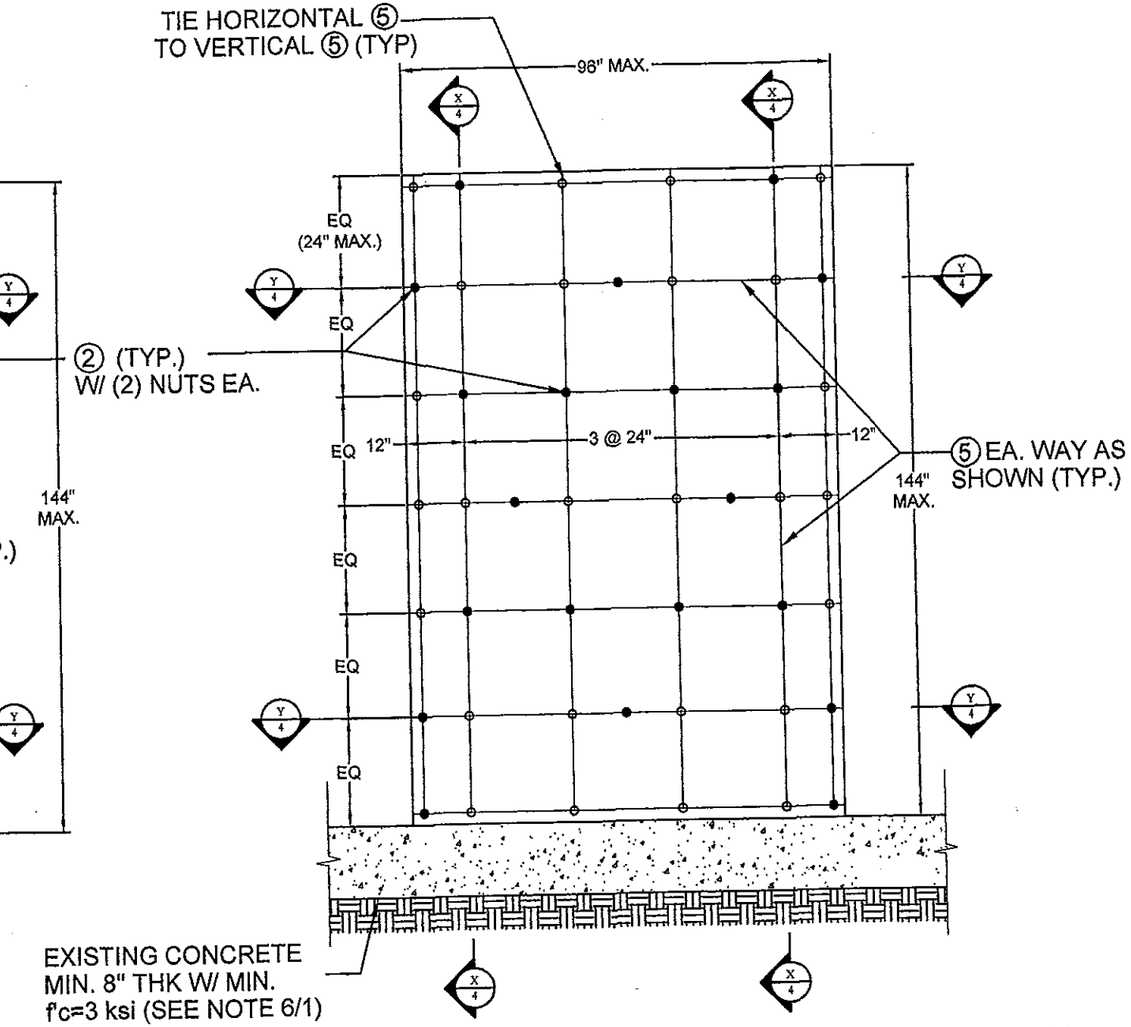

TYPICAL SINGLE SOLID PANEL ELEVATION W/ ⑤ LAYOUT OVER ③ & ② (EXTERIOR)

N.T.S.

FLORIDA BUILDING CODE (High Velocity Hurricane Zone)

Approved as complying with the Florida Building Code
Date 03/28/2013
NOA# 13-0107.04
Miami Dade Product Control
By

MIAMI DADE COUNTY

WALTER A. TILLIT JR. LICENSE No. 44167 STATE OF FLORIDA PROFESSIONAL ENGINEER

SIGNATURE/DATE

©2012 TILTECO, INC.

TILTECO INC.
TILLIT TESTING & ENGINEERING COMPANY
6355 N.W. 36th. St., Ste. 305 – VIRGINIA GARDENS, FL 33166
Phone : (305)871-1530 . Fax : (305)871-1531
e-mail: tilteco@aol.com
EB-0006719
WALTER A. TILLIT Jr., P.E.
FLORIDA Lic. # 44167

SprayRock BUILDING SYSTEMS™
SPRAYROCK.COM

STAND UP WALL SYSTEM

SPRAY ROCK BUILDING SYSTEMS, LLC.
701 W. CYPRESS CREEK ROAD SUITE 102
FORT LAUDERDALE, FL 33309
PH: (954) 707-5000 FAX: (954) 707-5001

REV. No	DESCRIPTION	DATE	REV. No	DESCRIPTION	DATE
1	GENERAL	02/15/13	5	–	–
2	FINAL	03/14/13	6	–	–
3	–	–	7	–	–
4	–	–	8	–	–

A.G.
DRAWN BY:

12/19/12
DATE

12-146
DRAWING No

SHEET 6 OF 16

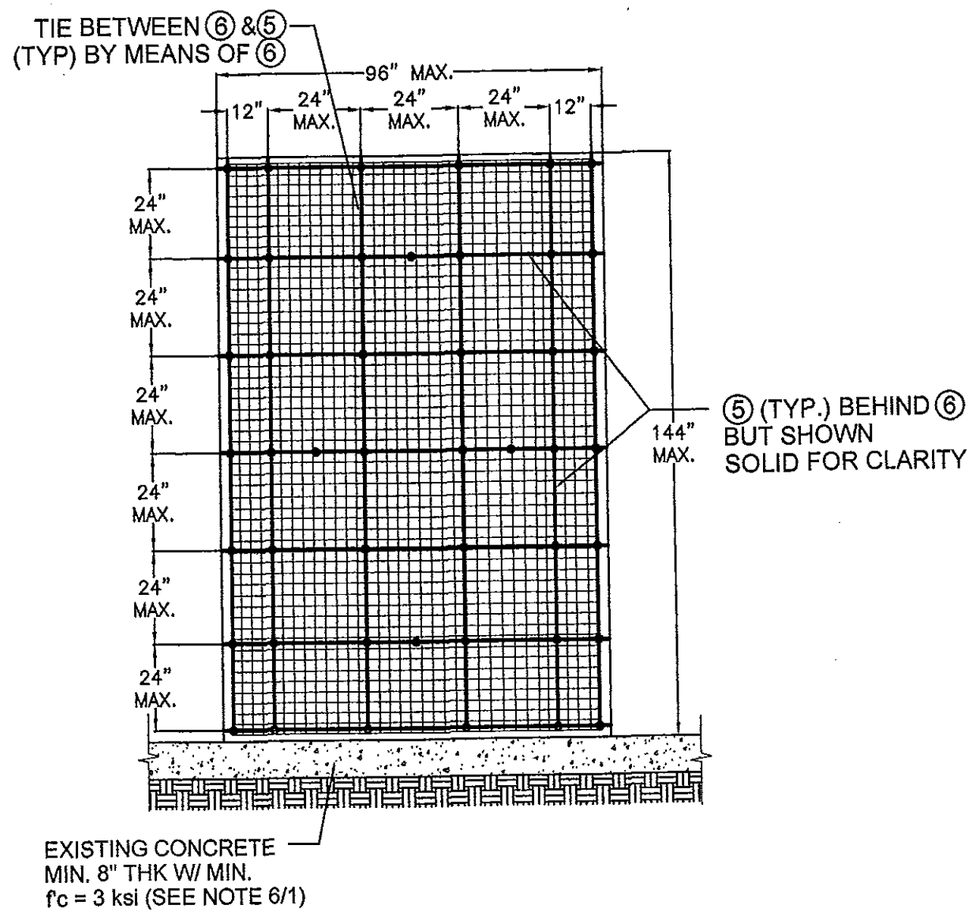

TYPICAL SINGLE SOLID PANEL ELEVATION W/ ⑥ LAYOUT OVER ⑤ (EXTERIOR)

N.T.S.

FLORIDA BUILDING CODE (High Velocity Hurricane Zone)

Approved as complying with the Florida Building Code
Date 03/28/2013
NOA# 13-0107.04
Miami Dade Product Control
By

MIAMI DADE COUNTY

WALTER A. TILLIT JR. LICENSE No. 44167 STATE OF FLORIDA PROFESSIONAL ENGINEER

P.E. SEAL/SIGNATURE/DATE

©2012 TILTECO, INC.

TILTECO INC.
TILLIT TESTING & ENGINEERING COMPANY
6355 N.W. 36th. St., Ste. 305 - VIRGINIA GARDENS, FL 33166
Phone : (305)871-1530 . Fax : (305)871-1531
e-mail: tilteco@aol.com
EB-0008719
WALTER A. TILLIT Jr., P.E.
FLORIDA Lic. # 44167

SprayRock BUILDING SYSTEMS™
SPRAYROCK.COM

STAND UP WALL SYSTEM

SPRAY ROCK BUILDING SYSTEMS, LLC.
701 W. CYPRESS CREEK ROAD SUITE 102
FORT LAUDERDALE, FL 33309
PH: (954) 707-5000 FAX: (954) 707-5001

REV. No	DESCRIPTION	DATE	REV. No	DESCRIPTION	DATE
1	GENERAL	02/15/13	5	–	–
2	FINAL	03/14/13	6	–	–
3	–	–	7	–	–
4	–	–	8	–	–

A.G.
DRAWN BY:

12/19/12
DATE

12-146
DRAWING No

SHEET 7 OF 16

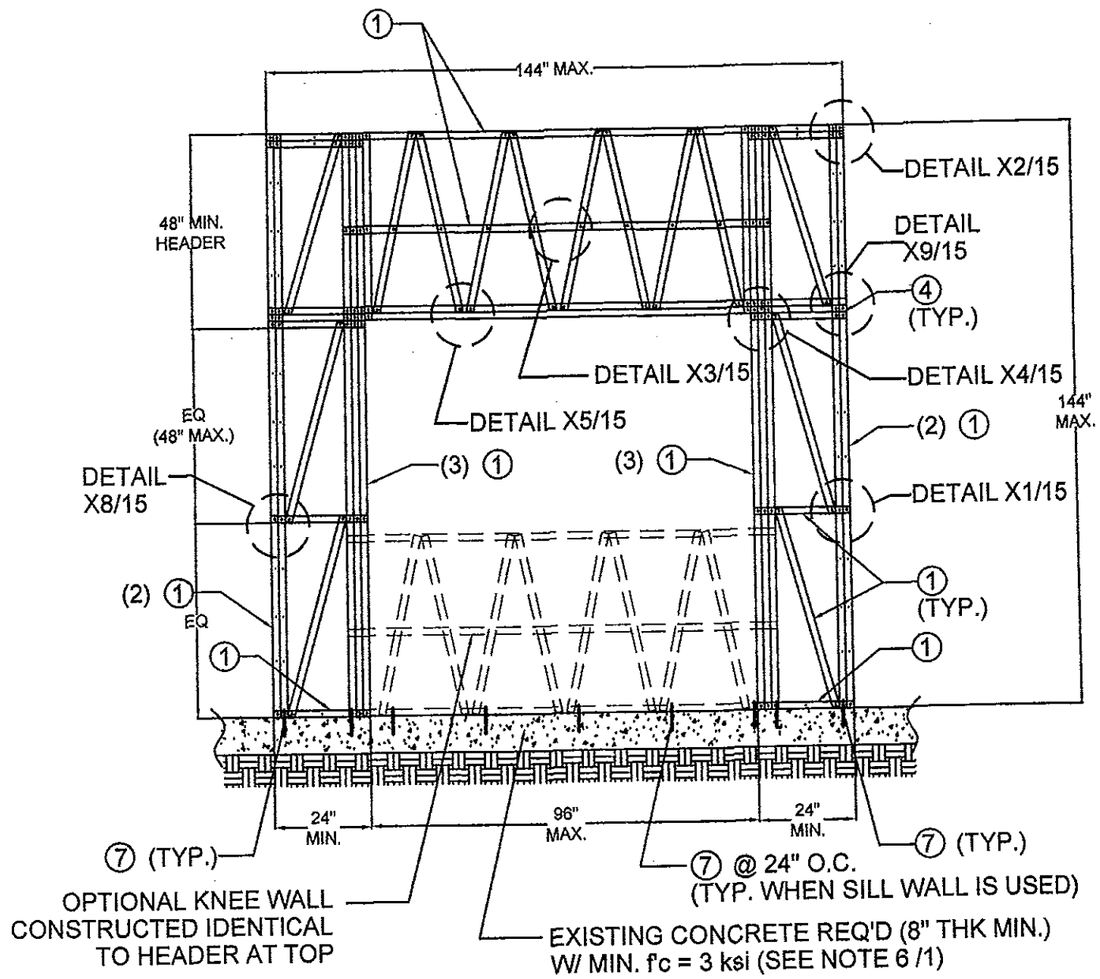

TYPICAL ELEVATION FOR SINGLE PANEL W/ OPENING W/ 1

FLORIDA BUILDING CODE (High Velocity Hurricane Zone)

Approved as complying with the
Florida Building Code
Date 03/28/2013
NOA# 13-0107.04
Miami Dade Product Control
By

MIAMI DADE COUNTY

WALTER A. TILLIT JR.
LICENSE
No. 44167
STATE OF
FLORIDA
PROFESSIONAL ENGINEER

P.E. SEAL/SIGNATURE/DATE

©2012 TILTECO, INC.

TILTECO INC.
TILLIT TESTING & ENGINEERING COMPANY
6355 N.W. 36th. St., Ste. 305 - VIRGINIA GARDENS, FL 33166
Phone : (305)871-1530 . Fax : (305)871-1531
e-mail: tilteco@aol.com
EB-0006719
WALTER A. TILLIT Jr., P.E.
FLORIDA Lic. # 44167

SprayRock BUILDING SYSTEMS™
SPRAYROCK.COM

STAND UP WALL SYSTEM

SPRAY ROCK BUILDING SYSTEMS, LLC.
701 W. CYPRESS CREEK ROAD SUITE 102
FORT LAUDERDALE, FL 33309
PH: (954) 707-5000 FAX: (954) 707-5001

REV. No	DESCRIPTION	DATE	REV. No	DESCRIPTION	DATE
1	GENERAL	02/18/13	5	–	–
2	FINAL	03/14/13	6	–	–
3	–	–	7	–	–
4	–	–	8	–	–

A.G.
DRAWN BY:

12/19/12
DATE

12-146
DRAWING No

SHEET 8 OF 16

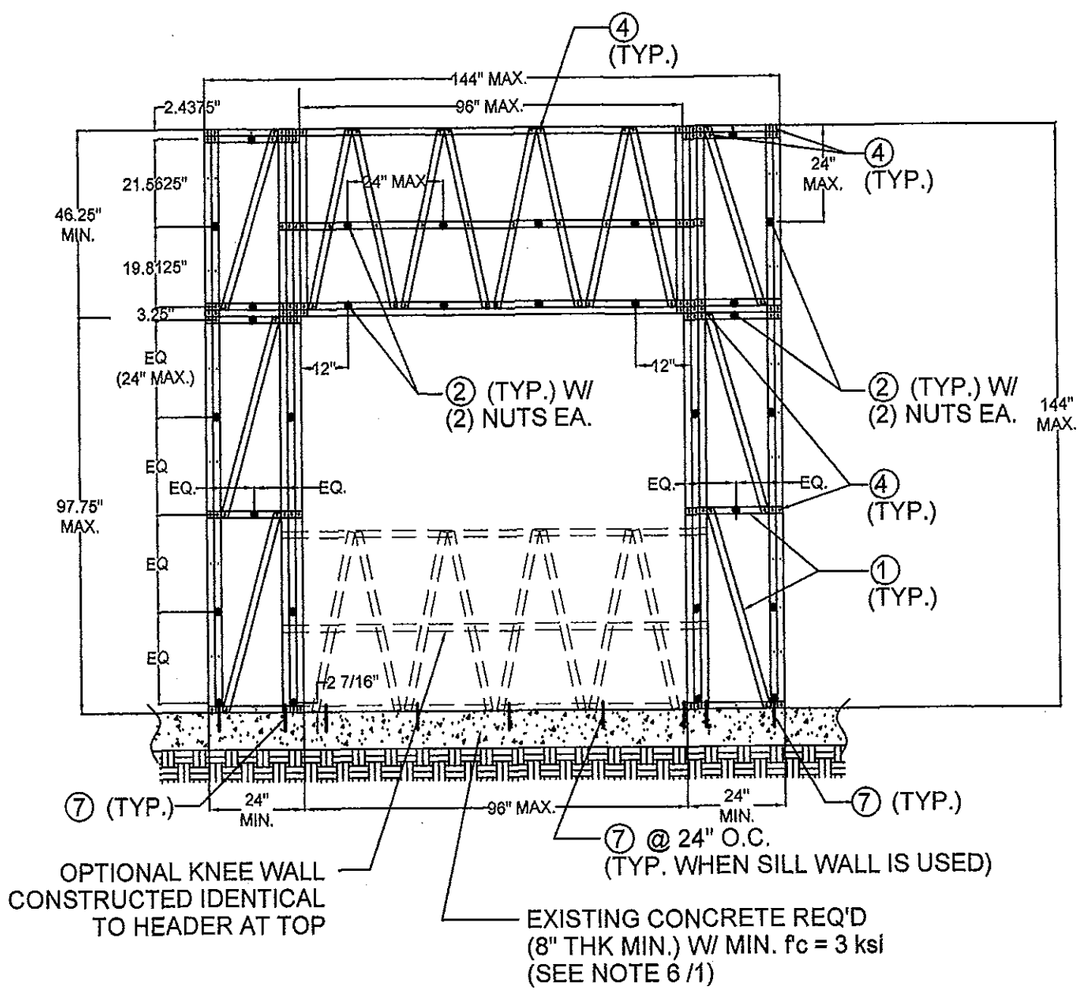

TYPICAL ELEVATION FOR SINGLE PANEL W/ OPENING W/ ② LAYOUT OVER ① (EXTERIOR)

N.T.S.

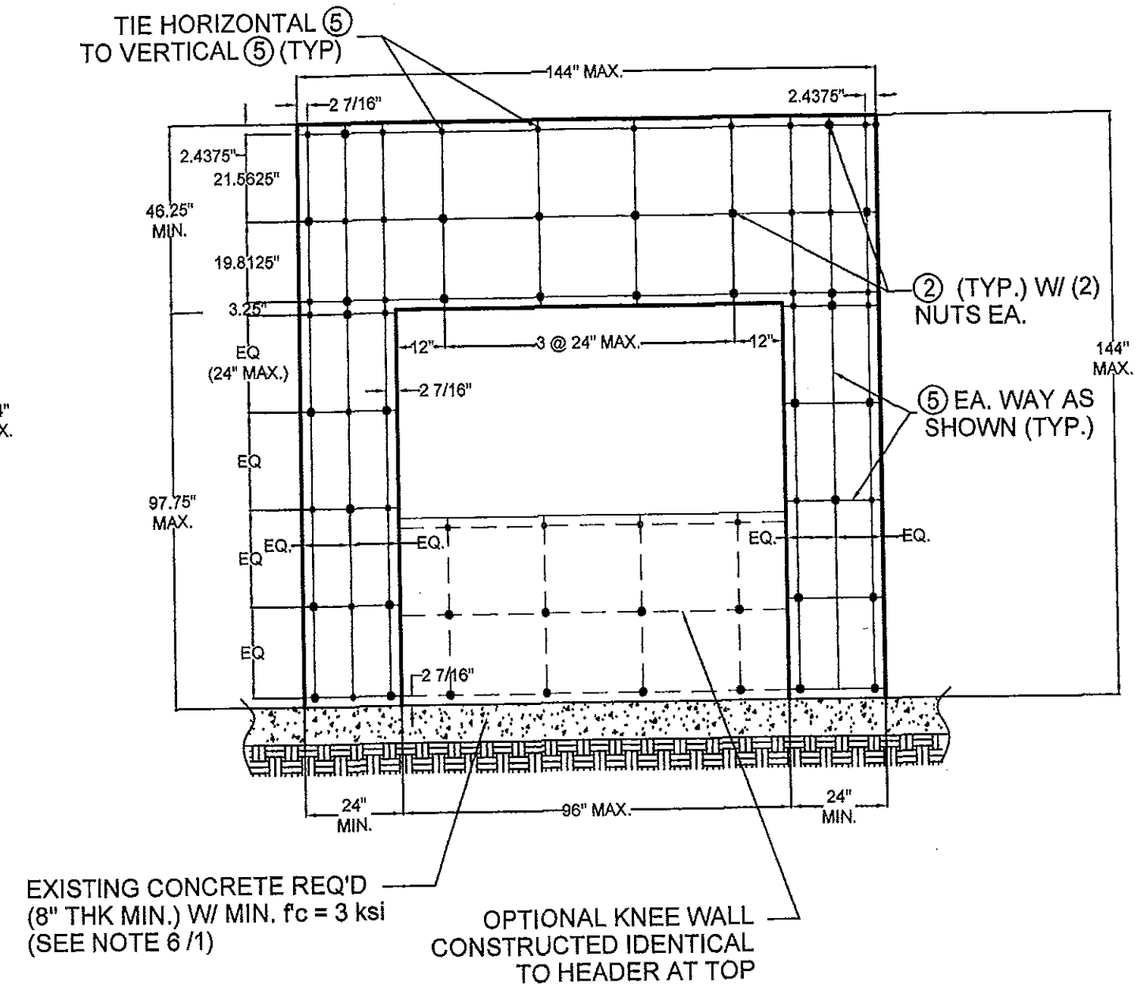

TYPICAL ELEVATION FOR SINGLE PANEL W/OPENING W/ ⑤ LAYOUT OVER ③ & ② (EXTERIOR)

N.T.S.

FLORIDA BUILDING CODE (High Velocity Hurricane Zone)

Approved as complying with the Florida Building Code
Date 03/28/2013
NOA# 13-0107.04
Miami Dade Product Control
By

MIAMI DADE COUNTY

WALTER A. TILLIT JR. LICENSE No. 44167 STATE OF FLORIDA PROFESSIONAL ENGINEER

P.E. SEAL SIGNATURE DATE

©2012 TILTECO, INC.

TILTECO INC.
TILLIT TESTING & ENGINEERING COMPANY
6355 N.W. 36th. St., Ste. 305 – VIRGINIA GARDENS, FL 33166
Phone : (305)871-1530 . Fax : (305)871-1531
e-mail: tilteco@aol.com
EB-0006719
WALTER A. TILLIT Jr., P.E.
FLORIDA Lic. # 44167

SprayRock BUILDING SYSTEMS™
SPRAYROCK.COM

STAND UP WALL SYSTEM

SPRAY ROCK BUILDING SYSTEMS, LLC.
701 W. CYPRESS CREEK ROAD SUITE 102
FORT LAUDERDALE, FL 33309
PH: (954) 707-5000 FAX: (954) 707-5001

REV. No	DESCRIPTION	DATE	REV. No	DESCRIPTION	DATE
1	GENERAL	02/15/13	5	–	–
2	FINAL	03/14/13	6	–	–
3	–	–	7	–	–
4	–	–	8	–	–

A.G.
DRAWN BY:

12/19/12
DATE

12-146
DRAWING No

SHEET 9 OF 16

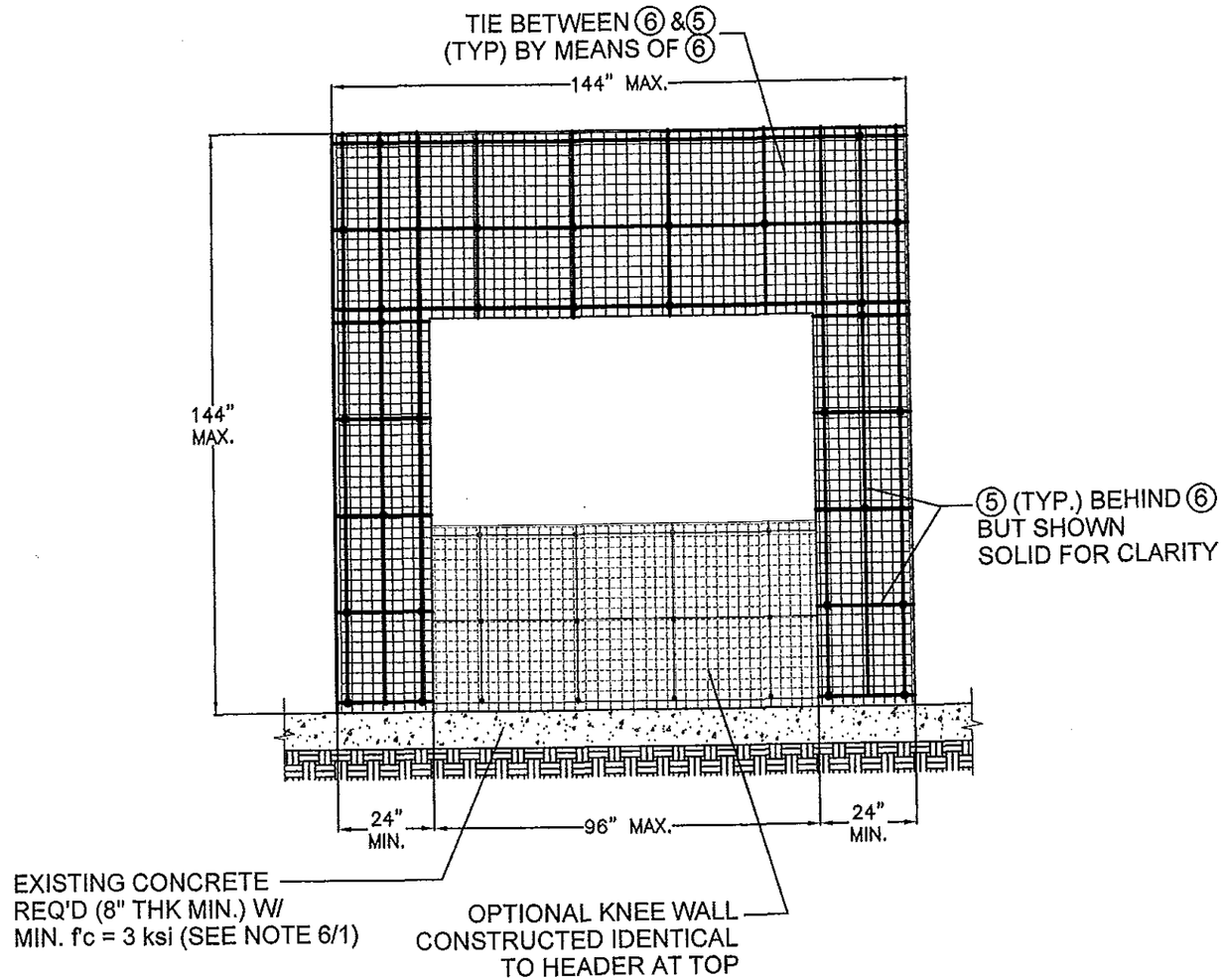

TYPICAL ELEVATION FOR SINGLE PANEL W/ OPENING W/ ⑥ LAYOUT OVER ⑤ (EXTERIOR)

N.T.S.

FLORIDA BUILDING CODE (High Velocity Hurricane Zone)

Approved as complying with the
Florida Building Code
Date 03/28/2013
NOA# 13-0107.04
Miami Dade Product Control
By

MIAMI DADE COUNTY

WALTER A. TILLIT JR.
LICENSE
No. 44167
STATE OF FLORIDA
PROFESSIONAL ENGINEER

P.E. SEAL/SIGNATURE/DATE

©2012 TILTECO, INC.

TILTECO INC.
TILLIT TESTING & ENGINEERING COMPANY
6355 N.W. 36th. St., Ste. 305 – VIRGINIA GARDENS, FL 33166
Phone : (305)871-1530 . Fax : (305)871-1531
e-mail: tilteco@aol.com
EB-0006719
WALTER A. TILLIT Jr., P.E.
FLORIDA Lic. # 44167

SprayRock BUILDING SYSTEMS™
SPRAYROCK.COM

STAND UP WALL SYSTEM

SPRAY ROCK BUILDING SYSTEMS, LLC.
701 W. CYPRESS CREEK ROAD SUITE 102
FORT LAUDERDALE, FL 33309
PH: (954) 707-5000 FAX: (954) 707-5001

REV. No	DESCRIPTION	DATE	REV. No	DESCRIPTION	DATE
1	GENERAL	02/15/13	5	–	–
2	FINAL	03/14/13	6	–	–
3	–	–	7	–	–
4	–	–	8	–	–

A.G.
DRAWN BY:

12/19/12
DATE

12-146
DRAWING No

SHEET 10 OF 16

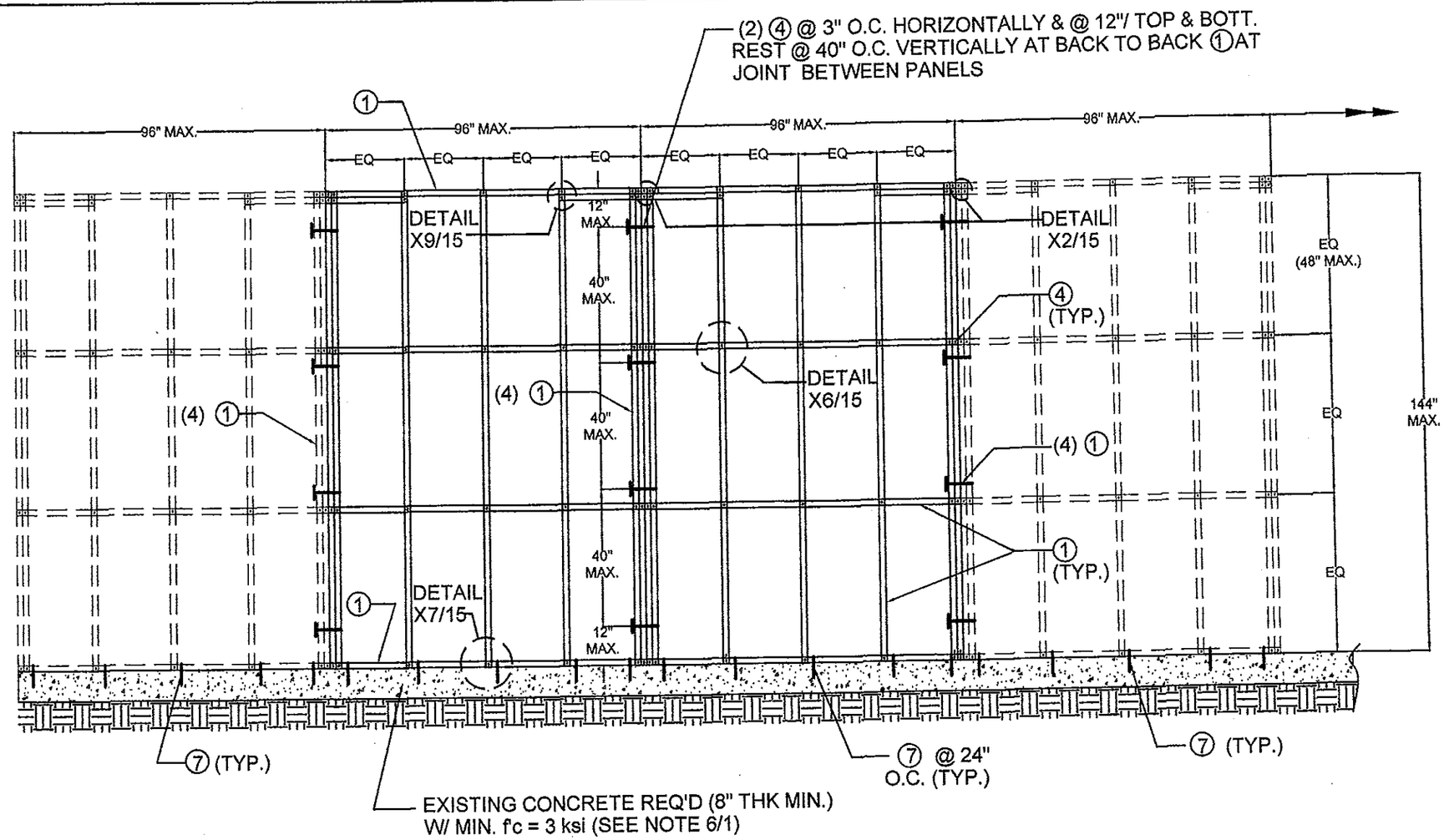

TYPICAL MULTIPLE SOLID PANELS FRAMING ELEVATION W/ ①

N.T.S.

FLORIDA BUILDING CODE (High Velocity Hurricane Zone)

Approved as complying with the Florida Building Code
Date 03/28/2013
NOA# 13-0107.04
Miami Dade Product Control
By

MIAMI DADE COUNTY

WALTER A. TILLIT JR. LICENSE No. 44167 STATE OF FLORIDA PROFESSIONAL ENGINEER

P.E. SEAL/SIGNATURE/DATE

©2012 TILTECO, INC.

TILTECO INC.
TILLIT TESTING & ENGINEERING COMPANY
6355 N.W. 36th. St., Ste. 305 – VIRGINIA GARDENS, FL 33166
Phone : (305)871-1530 . Fax : (305)871-1531
e-mail: tilteco@aol.com
EB-0006719
WALTER A. TILLIT Jr., P.E.
FLORIDA Lic. # 44167

SprayRock BUILDING SYSTEMS™
SPRAYROCK.COM

STAND UP WALL SYSTEM

SPRAY ROCK BUILDING SYSTEMS, LLC.
701 W. CYPRESS CREEK ROAD SUITE 102
FORT LAUDERDALE, FL 33309
PH: (954) 707-5000 FAX: (954) 707-5001

REV. No	DESCRIPTION	DATE	REV. No	DESCRIPTION	DATE
1	GENERAL	02/15/13	5	–	–
2	FINAL	03/14/13	6	–	–
3	–	–	7	–	–
4	–	–	8	–	–

A.G.
DRAWN BY:

12/19/12
DATE

12-146
DRAWING No

SHEET 11 OF 16

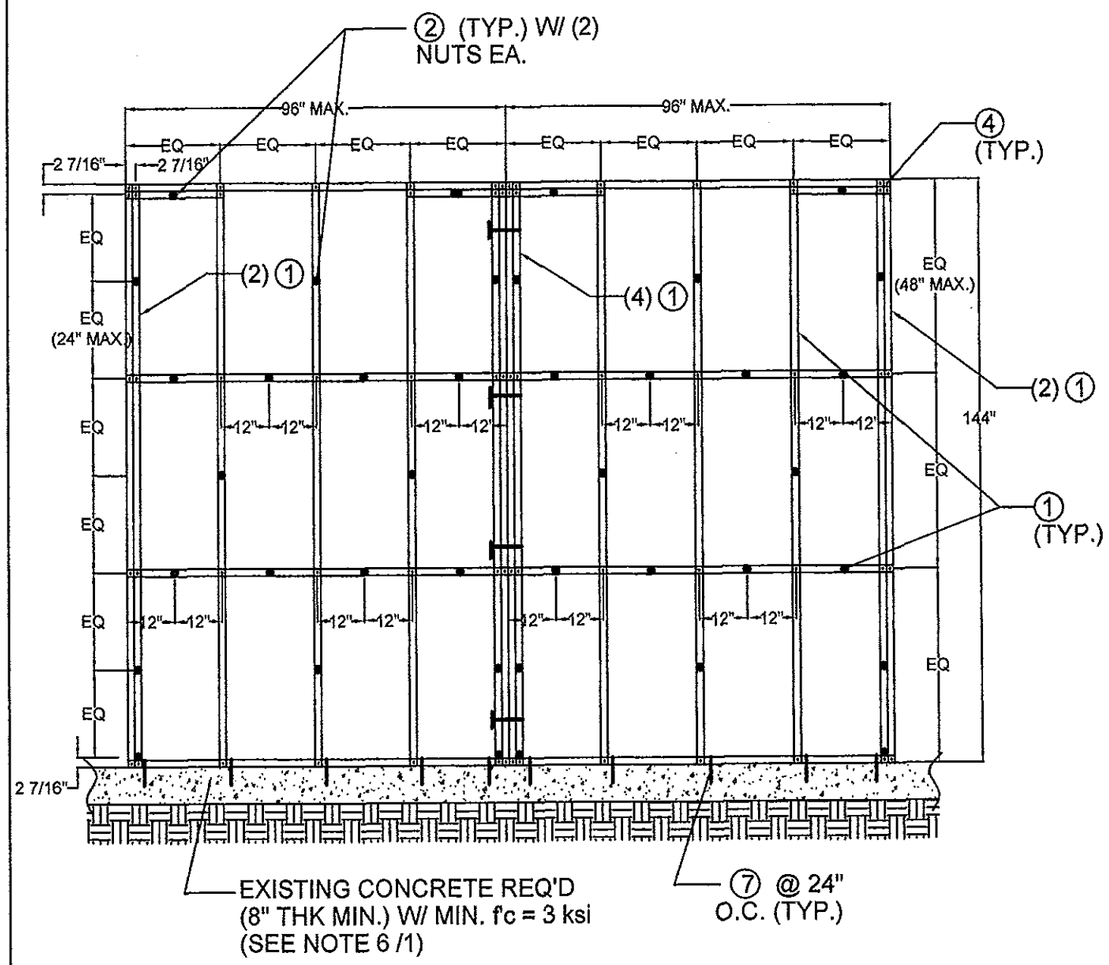

TYPICAL MULTIPLE SOLID PANEL ELEVATION W/ ② LAYOUT OVER ① (EXTERIOR)

N.T.S.

(SHOWN FOR DOUBLE PANELS, MULTIPLE PANELS SIMILAR)

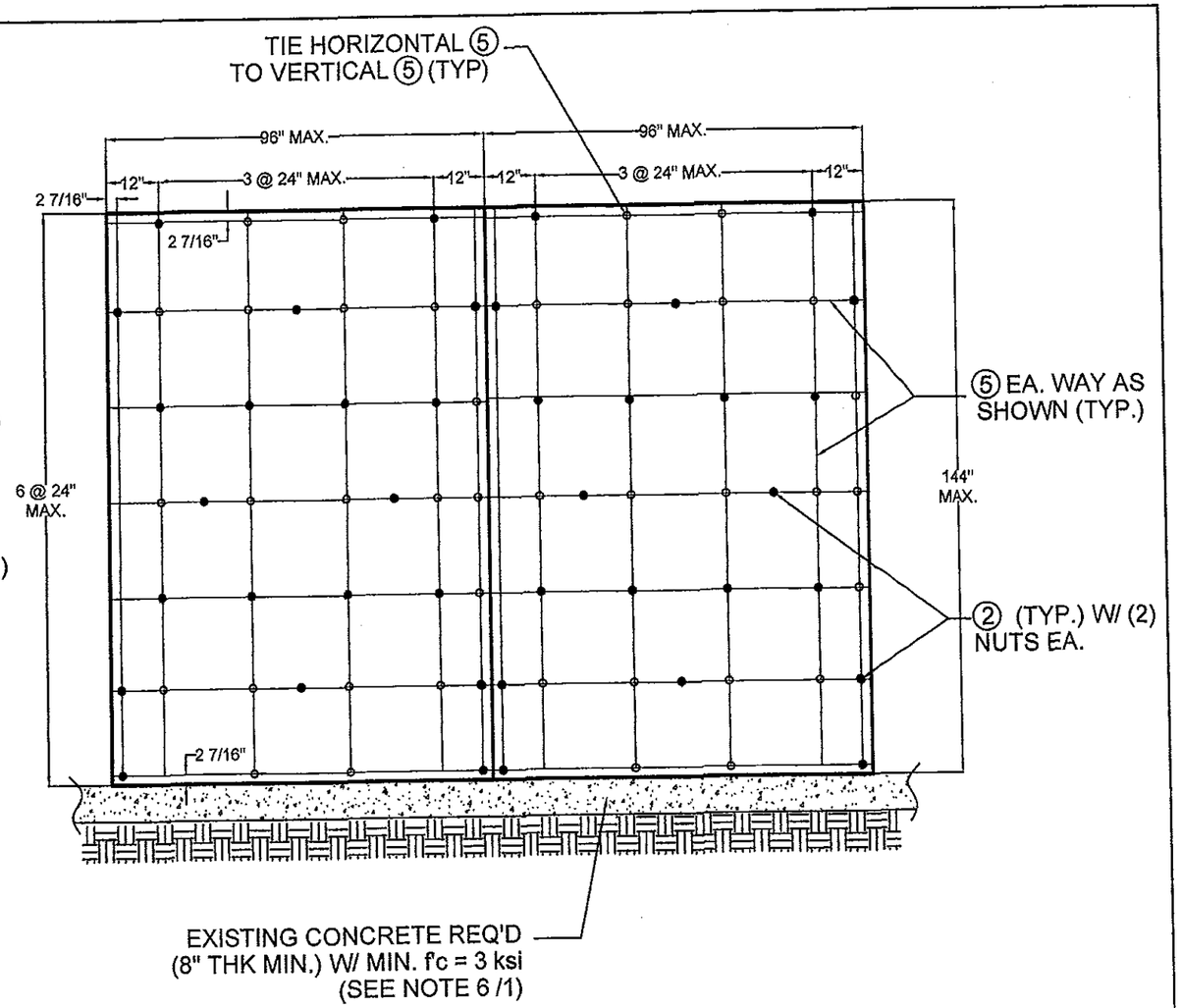

TYPICAL MULTIPLE SOLID PANEL ELEVATION W/ ⑤ LAYOUT OVER ③ & ② (EXTERIOR)

N.T.S.

(SHOWN FOR DOUBLE PANELS, MULTIPLE PANELS SIMILAR)

FLORIDA BUILDING CODE (High Velocity Hurricane Zone)

Approved as complying with the Florida Building Code
Date 03/28/2013
NOA# 13-0107.04
Miami Dade Product Control
By

MIAMI DADE COUNTY

WALTER A. TILLIT JR. LICENSE No. 44167 STATE OF FLORIDA PROFESSIONAL ENGINEER

P.E. SEAL/SIGNATURE/DATE

©2012 TILTECO, INC.

TILTECO INC.
TILLIT TESTING & ENGINEERING COMPANY
6355 N.W. 36th. St., Ste. 305 - VIRGINIA GARDENS, FL 33166
Phone : (305)871-1530 . Fax : (305)871-1531
e-mail: tilteco@aol.com
EB-0006719
WALTER A. TILLIT Jr., P.E.
FLORIDA Lic. # 44167

SprayRock BUILDING SYSTEMS™
SPRAYROCK.COM

STAND UP WALL SYSTEM

SPRAY ROCK BUILDING SYSTEMS, LLC.
701 W. CYPRESS CREEK ROAD SUITE 102
FORT LAUDERDALE, FL 33309
PH: (954) 707-5000 FAX: (954) 707-5001

REV. No	DESCRIPTION	DATE	REV. No	DESCRIPTION	DATE
1	GENERAL	02/15/13	5	–	–
2	FINAL	03/14/13	6	–	–
3	–	–	7	–	–
4	–	–	8	–	–

A.G.
DRAWN BY:

12/19/12
DATE

12-146
DRAWING No

SHEET 12 OF 16

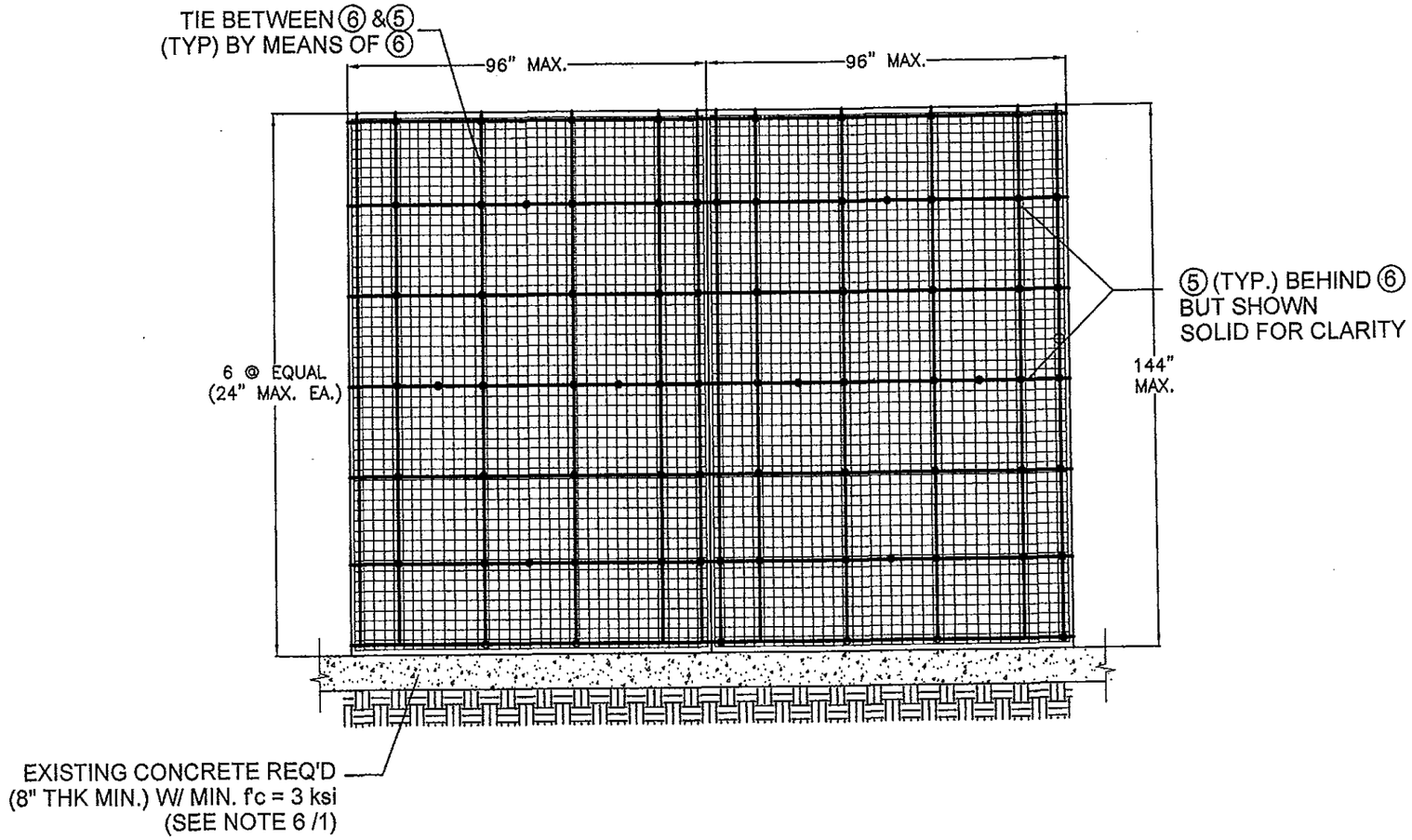

TYPICAL MULTIPLE SOLID PANEL ELEVATION W/ ⑥ LAYOUT OVER ⑤ (EXTERIOR)

N.T.S.

(SHOWN FOR DOUBLE PANELS, MULTIPLE PANELS SIMILAR)

FLORIDA BUILDING CODE (High Velocity Hurricane Zone)

Approved as complying with the Florida Building Code
Date 03/28/2013
NOA# 13-0107.14
Miami Dade Product Control
By

MIAMI DADE COUNTY

WALTER A. TILLIT JR. LICENSE No. 44167 STATE OF FLORIDA PROFESSIONAL ENGINEER

P.E. SEAL & SIGNATURE DATE

©2012 TILTECO, INC.

TILTECO INC.
TILLIT TESTING & ENGINEERING COMPANY
6355 N.W. 36th. St., Ste. 305 – VIRGINIA GARDENS, FL 33166
Phone : (305)871-1530 . Fax : (305)871-1531
e-mail: tilteco@aol.com
EB-0006719
WALTER A. TILLIT Jr., P.E.
FLORIDA Lic. # 44167

SprayRock BUILDING SYSTEMS™
SPRAYROCK.COM

STAND UP WALL SYSTEM

SPRAY ROCK BUILDING SYSTEMS, LLC.
701 W. CYPRESS CREEK ROAD SUITE 102
FORT LAUDERDALE, FL 33309
PH: (954) 707-5000 FAX: (954) 707-5001

REV. No	DESCRIPTION	DATE	REV. No	DESCRIPTION	DATE
1	GENERAL	02/15/13	5	–	–
2	FINAL	03/14/13	6	–	–
3	–	–	7	–	–
4	–	–	8	–	–

A.G.
DRAWN BY:

12/19/12
DATE

12-146
DRAWING No

SHEET 13 OF 16

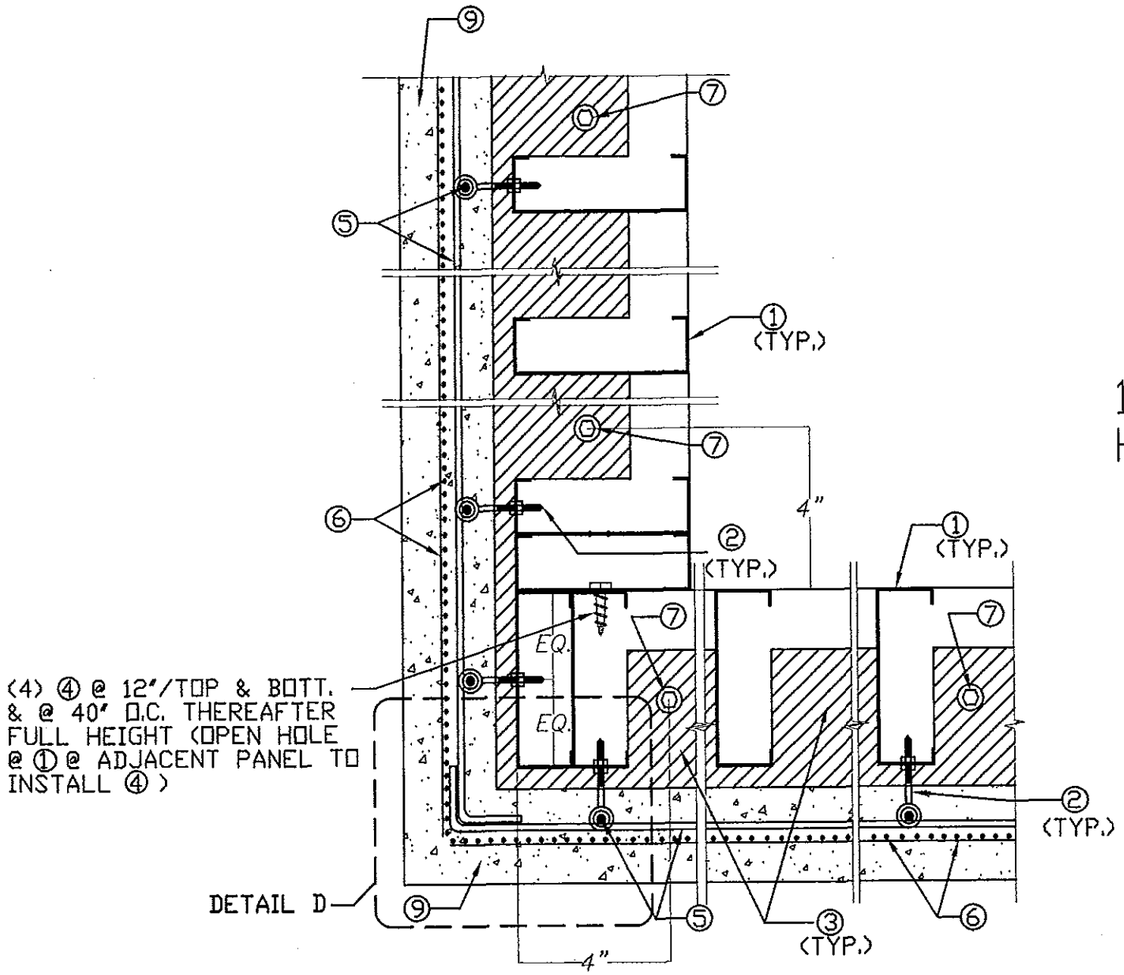

TYPICAL CORNER DETAIL (PLAN)

N.T.S.

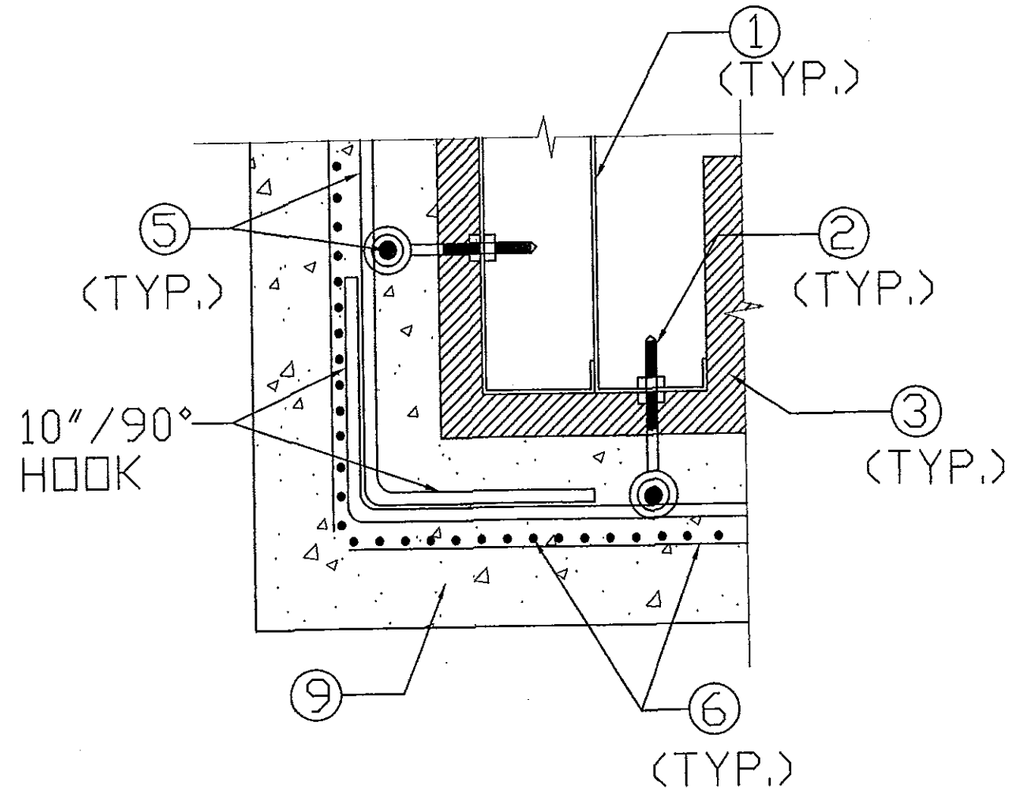

DETAIL "D" (PLAN)

N.T.S.

FLORIDA BUILDING CODE (High Velocity Hurricane Zone)

Approved as complying with the Florida Building Code
Date 03/28/2013
NOA# 13-0107.04
Miami Dade Product Control
By

MIAMI DADE COUNTY

WALTER A. TILLIT JR. LICENSE No. 44167 STATE OF FLORIDA PROFESSIONAL ENGINEER

P.E. SEAL/SIGNATURE, DATE

©2012 TILTECO, INC.

TILTECO INC.
TILLIT TESTING & ENGINEERING COMPANY
6355 N.W. 36th. St., Ste. 305 – VIRGINIA GARDENS, FL 33166
Phone : (305)871-1530 . Fax : (305)871-1531
e-mail: tilteco@aol.com
EB-0006719
WALTER A. TILLIT Jr., P.E.
FLORIDA Lic. # 44167

SprayRock BUILDING SYSTEMS™
SPRAYROCK.COM

STAND UP WALL SYSTEM

SPRAY ROCK BUILDING SYSTEMS, LLC.
701 W. CYPRESS CREEK ROAD SUITE 102
FORT LAUDERDALE, FL 33309
PH: (954) 707-5000 FAX: (954) 707-5001

REV. No	DESCRIPTION	DATE	REV. No	DESCRIPTION	DATE
1	GENERAL	02/15/13	5	–	–
2	FINAL	03/14/13	6	–	–
3	–	–	7	–	–
4	–	–	8	–	–

A.G.
DRAWN BY:

12/19/12
DATE

12-146
DRAWING No

SHEET 14 OF 16

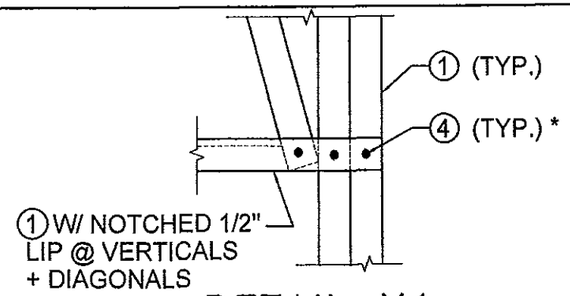

DETAIL X1
N.T.S

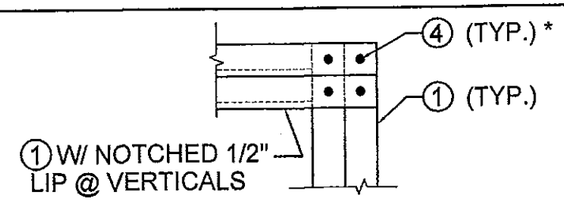

DETAIL X2
N.T.S

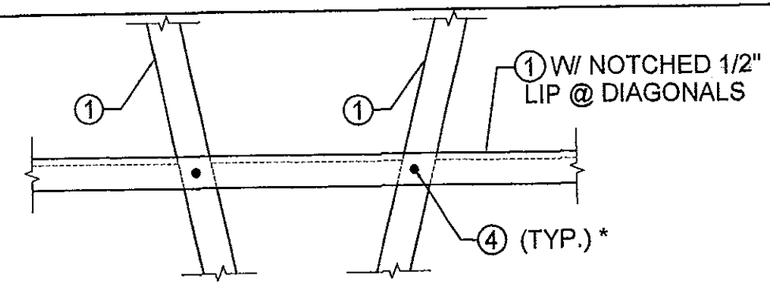

DETAIL X3
N.T.S

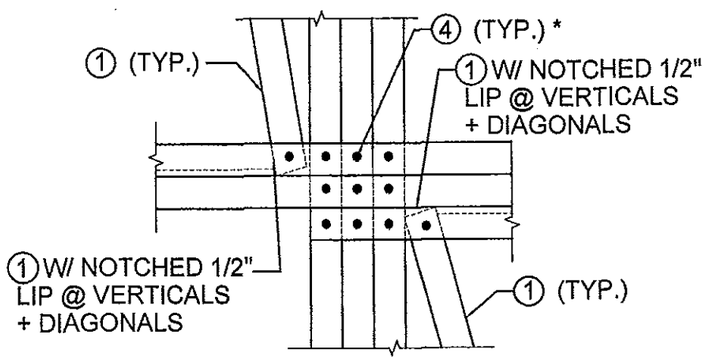

DETAIL X4
N.T.S

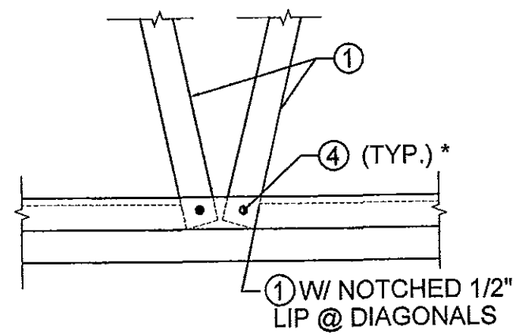

DETAIL X5
N.T.S

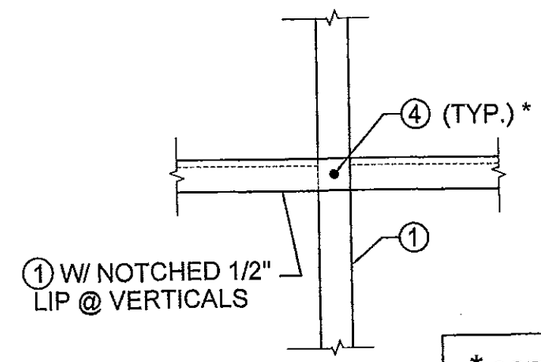

DETAIL X6
N.T.S

* SCREW REQUIRED FRONT & BACK OF 1

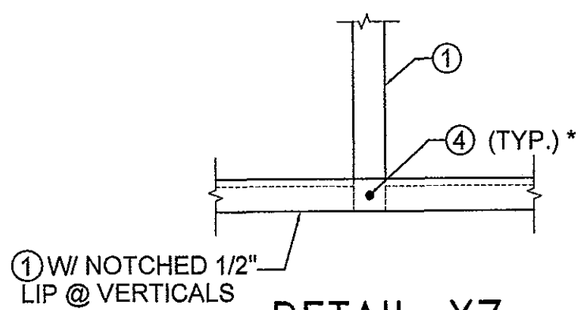

DETAIL X7
N.T.S

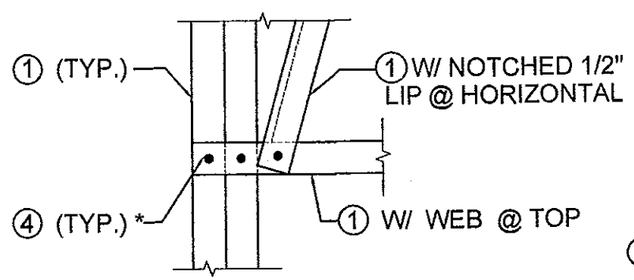

DETAIL X8
N.T.S

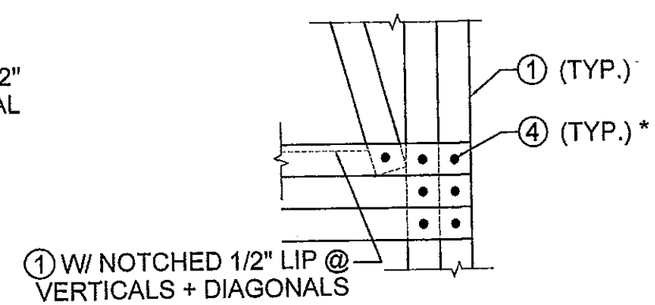

DETAIL X9
N.T.S

FLORIDA BUILDING CODE (High Velocity Hurricane Zone)

Approved as complying with the Florida Building Code
Date 03/28/2013
NOA# 13-0107.04
Miami Dade Product Control
By

MIAMI DADE COUNTY

WALTER A. TILLIT JR. LICENSE No. 44167 STATE OF FLORIDA PROFESSIONAL ENGINEER 3/15/13

P.E. SEAL SIGNATURE DATE

©2012 TILTECO, INC.

TILTECO INC.
TILLIT TESTING & ENGINEERING COMPANY
6335 N.W. 36th. St., Ste. 305 – VIRGINIA GARDENS, FL 33166
Phone : (305)871-1530 . Fax : (305)871-1531
e-mail: tilteco@aol.com
EB-0006719
WALTER A. TILLIT Jr., P.E.
FLORIDA Lic. # 44167

SprayRock BUILDING SYSTEMS™
SPRAYROCK.COM

STAND UP WALL SYSTEM

SPRAY ROCK BUILDING SYSTEMS, LLC.
701 W. CYPRESS CREEK ROAD SUITE 102
FORT LAUDERDALE, FL 33309
PH: (954) 707-5000 FAX: (954) 707-5001

REV. No	DESCRIPTION	DATE	REV. No	DESCRIPTION	DATE
1	GENERAL	02/15/13	5	–	–
2	FINAL	03/14/13	6	–	–
3	–	–	7	–	–
4	–	–	8	–	–

A.G.
DRAWN BY:

12/19/12
DATE

12-146
DRAWING No

SHEET 15 OF 16

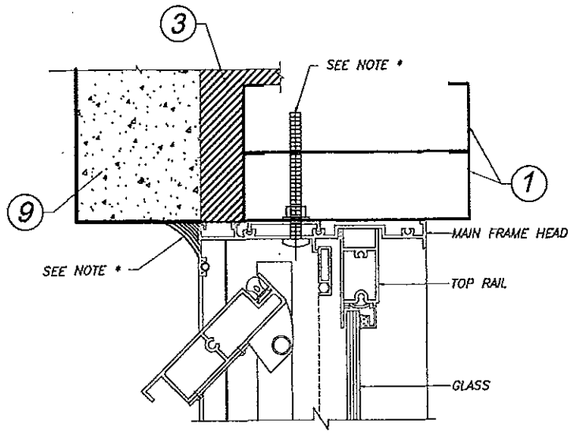

WINDOW HEAD CONNECTION TO PANEL
SCALE : 3/8" = 1"

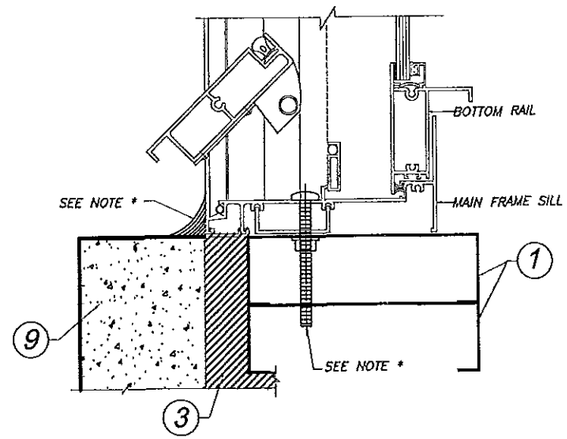

WINDOW SILL CONNECTION TO PANEL
SCALE : 3/8" = 1"

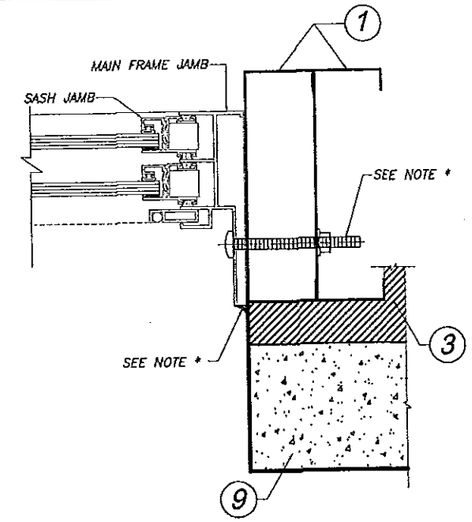

WINDOW JAMB CONNECTION TO PANEL
SCALE : 3/8" = 1"

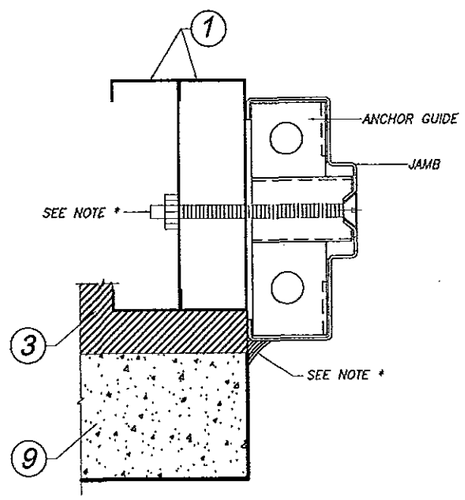

DOOR JAMB CONNECTION TO PANEL
SCALE : 3/8" = 1"

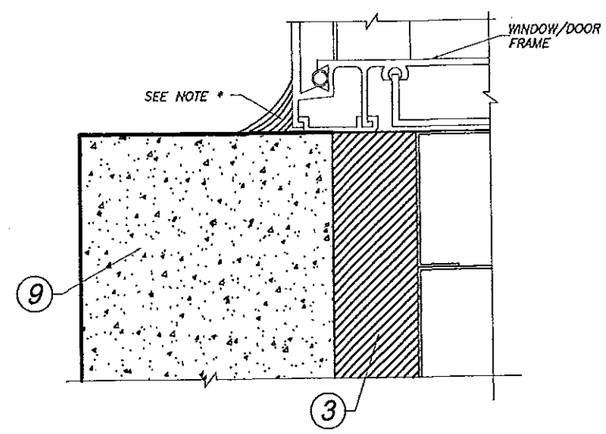

TYPICAL SEALING DETAIL
N.T.S.

* SEALING DETAIL & SEALANT TYPE & CONNECTION TYPE SHALL STRICTLY COMPLY W/ SEPARATE NOA FOR WINDOWS OR DOOR TO BE INSTALLED.

TYPICAL DOOR & WINDOW CONNECTION TO WALL PANEL

FLORIDA BUILDING CODE (High Velocity Hurricane Zone)

Approved as complying with the Florida Building Code
Date 03/28/2013
NOA# 13-0107.04
Miami Dade Product Control
By

MIAMI DADE COUNTY

WALTER A. TILLIT JR. LICENSE No. 44167 STATE OF FLORIDA PROFESSIONAL ENGINEER

PROJECT SEAL/SIGNATURE DATE

©2012 TILTECO, INC.

TILTECO INC.
TILLIT TESTING & ENGINEERING COMPANY
6355 N.W. 36th. St., Ste. 305 - VIRGINIA GARDENS, FL 33166
Phone : (305)871-1530 . Fax : (305)871-1531
e-mail: tilteco@aol.com
EB-0008719
WALTER A. TILLIT Jr., P.E.
FLORIDA Lic. # 44167

SprayRock BUILDING SYSTEMS™
SPRAYROCK.COM

STAND UP WALL SYSTEM

SPRAY ROCK BUILDING SYSTEMS, LLC.
701 W. CYPRESS CREEK ROAD SUITE 102
FORT LAUDERDALE, FL 33309
PH: (954) 707-5000 FAX: (954) 707-5001

REV. No	DESCRIPTION	DATE	REV. No	DESCRIPTION	DATE
1	GENERAL	02/13/13	5	–	–
2	FINAL	03/14/13	6	–	–
3	–	–	7	–	–
4	–	–	8	–	–

A.G.
DRAWN BY:

12/19/12
DATE

12-146
DRAWING No

SHEET 16 OF 16