MIAMI-DADE COUNTY
DEPARTMENT OF REGULATORY AND ECONOMIC RESOURCES (RER)
BOARD AND CODE ADMINISTRATION DIVISION

MIAMI–DADE COUNTY, FLORIDA
PRODUCT CONTROL SECTION
11805 SW 26 Street, Room 208
T (786) 315–2590 F (786) 315–2599
www.miamidade.gov/economy

NOTICE OF ACCEPTANCE (NOA)

Oldcastle Building Envelope, Inc. (TX)
803 Airport Road
Terrell, TX 75160

SCOPE:

This NOA is being issued under the applicable rules and regulations governing the use of construction materials. The documentation submitted has been reviewed and accepted by Miami–Dade County RER–Product Control Section to be used in Miami–Dade County and other areas where allowed by the Authority Having Jurisdiction (AHJ).

This NOA shall not be valid after the expiration date stated below. The Miami–Dade County Product Control Section (In Miami–Dade County) and/or the AHJ (in areas other than Miami–Dade County) reserve the right to have this product or material tested for quality assurance purposes. If this product or material fails to perform in the accepted manner, the manufacturer will incur the expense of such testing and the AHJ may immediately revoke, modify, or suspend the use of such product or material within their jurisdiction. RER reserves the right to revoke this acceptance, if it is determined by Miami–Dade County Product Control Section that this product or material fails to meet the requirements of the applicable building code.

This product is approved as described herein, and has been designed to comply with the Florida Building Code, including the High Velocity Hurricane Zone.

DESCRIPTION: Series "Reliance StormMax Captured Insulated Laminated Glass (Dry Glazed)" Aluminum Curtain Wall System Single and Twin Span – L.M.I.

APPROVAL DOCUMENT: Drawing No. **12–154**, Series titled "Reliance StormMax Captured Curtain Wall System – Large Missile Impact Insulated Laminated Glass (Dry Glazed)", sheets 01 through 40 of 43, including 9A, 10A and 11A, dated 10/12/12 with the latest revision dated 05/14/13, prepared by Tilteco, Inc., signed and sealed by Walter A. Tillit, Jr., P. E., bearing the Miami–Dade County Product Control Section Approval stamp with the Notice of Acceptance number and Approval date by the Miami–Dade County Product Control Section.

MISSILE IMPACT RATING: Large and Small Missile Impact Resistant

LABELING: Each unit shall bear a permanent label with the manufacturer's name or logo, Tampa, FL. and Newnan, GA., series, and following statement: "Miami–Dade County Product Control Approved", unless otherwise noted herein.

RENEWAL of this NOA shall be considered after a renewal application has been filed and there has been no change in the applicable building code negatively affecting the performance of this product.

TERMINATION of this NOA will occur after the expiration date or if there has been a revision or change in the materials, use, and/or manufacture of the product or process. Misuse of this NOA as an endorsement of any product, for sales, advertising or any other purposes shall automatically terminate this NOA. Failure to comply with any section of this NOA shall be cause for termination and removal of NOA.

ADVERTISEMENT: The NOA number preceded by the words Miami–Dade County, Florida, and followed by the expiration date may be displayed in advertising literature. If any portion of the NOA is displayed, then it shall be done in its entirety.

INSPECTION: A copy of this entire NOA shall be provided to the user by the manufacturer or its distributors and shall be available for inspection at the job site at the request of the Building Official.

This NOA consists of this page 1 and evidence pages E–1, E–2 and E–3, as well as approval document mentioned above.

The submitted documentation was reviewed by **Jaime D. Gascon, P. E.**

MIAMI-DADE COUNTY APPROVED

J. Gascon
5/24/13

B. TESTS (CONTINUED)

4. Test reports on:
1) Air Infiltration Test, per FBC, TAS 202–94
2) Uniform Static Air Pressure Test, Loading per FBC, TAS 202–94
3) Water Resistance Test, per FBC, TAS 202–94
4) Large Missile Impact Test per FBC, TAS 201–94
5) Small Missile Impact Test per FBC, TAS 201–94
6) Cyclic Wind Pressure Loading per FBC, TAS 203–94

along with marked–up drawings and installation diagram of a structural Aluminum curtain wall system, prepared by Construction Consulting Laboratory, Inc., Test Report No. **CCLI–11–230**, dated 12/12/11, signed & sealed by Abdolhossein Rezadad, P. E.

C. CALCULATIONS

1. Anchor calculations and structural analysis, complying with **FBC–2010**, prepared by Tilteco, Inc., dated 01/09/13, signed and sealed by Walter A. Tillit, Jr., P. E.

2. Glazing complies with ASTM E1300–04

D. QUALITY ASSURANCE

1. Miami–Dade Department of Regulatory and Economic Resources (RER).

E. MATERIAL CERTIFICATIONS

1. Notice of Acceptance No. **11–0624.02** issued to **E.I. DuPont DeNemours & Co.**, Inc. for their "**DuPont SentryGlas® Interlayer**" dated 08/25/11, expiring on 01/14/17.

2. BOM–P/N: GP–1015; EPG Part No. **RM270555** EPDM exterior glazing gasket by Sealing Profiles U.S., Inc. complying with ASTM C1166 Option II, ASTM D412 1410 PSI, ASTM D395B 22 HRS 212°F, ASTM D2240 71 shore A, ASTM 1149 14.5 Ksi, 100hrs @ 104°F, 20%, ASTM D573 70 HRS 212°F +8% increase –21% elongation, ASTM D624 Die C 126.2 lbf/in., ASTM D746 3 minutes @–40°F, ASTM D925 No migratory stain.

3. BOM–P/N: GP–1015; EPG Part No. **RM200510** Closed Cell EPDM sponge by Sealing Profiles U.S., Inc. complying with ASTM C1166 Option II, ASTM D395B 22 HRS 212°F, ASTM D1056 22.9 psi, ASTM 1149 43.5 Ksi, 100hrs @ 104°F, 40%, ASTM C 1083 1%, ASTM D925 No migratory stain.

4. BOM–P/N: GP–117; EPG Part No. **RM260555** EPDM exterior glazing gasket by Sealing Profiles U.S., Inc. complying with ASTM C1166 Option II, ASTM D412 1300 PSI, ASTM D395B 22 HRS 212°F 25.4%, ASTM D2240 59 shore A, ASTM 1149 14.5 Ksi, 100hrs @ 104°F, 20%, ASTM D573 70 HRS 212°F 0% increase –38% elongation, ASTM D624 Die C 164.5 lbf/in., ASTM D746 3 minutes @–40°F, ASTM D925 No migratory stain.

Jaime D. Gascon, P. E.
Product Control Section Supervisor
NOA No. 13–0110.05
Expiration Date: May 30, 2018
Approval Date: May 30, 2013

F. STATEMENTS

1. Statement letter of conformance and complying with **FBC–2010**, issued by Tilteco, Inc., dated 12/18/12, signed and sealed by Walter A. Tillit, Jr., P. E.
2. Statement letter of no financial interest, issued by Tilteco, Inc., dated 12/18/12, signed and sealed by Walter A. Tillit, Jr., P.E.
3. Laboratory compliance letter for Test Reports No.'s **ATI–A8744.01–801–18** and **ATI–A8744.03–801–18**, both issued by Architectural Testing, Inc., dated 08/05/11, signed and sealed by Shawn G. Collins, P. E.
4. Laboratory compliance letter for Test Reports No.'s **CCLI–11–201** & **CCLI–11–230**, both issued by Construction Consulting Laboratory, Inc., dated 12/12/11, signed and sealed by Abdolhossein Rezadad, P. E.

G. OTHERS

1. None.

Jaime D. Gascon, P. E.
Product Control Section Supervisor
NOA No. 13–0110.05
Expiration Date: May 30, 2018
Approval Date: May 30, 2013

PRODUCT APPROVAL FOR RELIANCE STORMMAX IMPACT-RESISTANT CAPTURED CURTAIN WALL SYSTEM FOR USE IN HURRICANE ZONES REQUIRING LARGE MISSILE IMPACT PROTECTION.

GENERAL NOTES:

1. RELIANCE STORMMAX IMPACT RESISTANT CAPTURED CURTAIN WALL SYSTEM LARGE MISSILE INSULATED LAMINATED GLASS (DRYGLAZED), SHOWN ON THIS PRODUCT APPROVAL DOCUMENT (P.A.D.) HAS BEEN VERIFIED FOR COMPLIANCE IN ACCORDANCE WITH 2010 EDITION OF THE FLORIDA BUILDING CODE. CURTAIN WALL MAY BE INSTALLED WITHIN HIGH VELOCITY HURRICANE ZONES.

   DESIGN WIND LOADS SHALL BE DETERMINED AS PER SECTION **1620** OF THE ABOVE MENTIONED CODE, USING ASCE 7-10 AND SHALL NOT EXCEED THE MAXIMUM (A.S.D.) DESIGN PRESSURE RATINGS INDICATED ON NOTE 2. IN ORDER TO VERIFY THE ABOVE CONDITION, ULTIMATE DESIGN WIND LOADS DETERMINED PER ASCE 7-10 SHALL BE FIRST REDUCED TO A.S.D. DESING WIND LOADS BY MULTIPLYING THEM BY 0.6 IN ORDER TO COMPARE THESE W/ MAX. (A.S.D.) DESING PRESSURE RATINGS INDICATED ON NOTE 2.

   IN ORDER TO VERIFY THAT ANCHORS ON THIS P.A.D., AS TESTED, WERE NOT OVERSTRESSED, A 33% INCREASE IN ALLOWABLE STRESS FOR WIND LOADS WAS **NOT** USED IN THEIR ANALYSIS.
   THIS PRODUCT'S ADEQUACY FOR IMPACT AND CYCLIC RESISTANCE HAS BEEN VERIFIED IN ACCORDANCE WITH SECTION **1626** OF THE ABOVE MENTIONED CODE AS PER PROTOCOLS TAS-201, TAS-202, TAS-203, **PER ARCHITECTURAL TESTING LAB REPORTS # A8744.01-801-18, # A8744.03-801-18 & CONSTRUCTION CONSULTING LAB REPORT # CCLI-11-201** AND AS PER SUBMITTED STRUCTURAL CALCULATIONS, PERFORMED AS PER SECTION **1615** OF THE FLORIDA BUILDING CODE.

2. MAXIMUM A.S.D. DESIGN PRESSURE RATING FOR THIS CURTAIN WALL SHALL BE AS SHOWN ON SHEETS 8, 9A, 10A, 12 AND 13.

3. THIS PRODUCT WILL NOT REQUIRE A HURRICANE PROTECTION DEVICE FOR INSTALLATIONS UP TO 30 FEET ABOVE GRADE.

4. THIS PRODUCT IS APPROVED FOR AIR/WATER INFILTRATION (15.0 PSF WATER PRESSURE).

5. RELIANCE STORMMAX IMPACT RESISTANT CAPTURED CURTAIN WALL SYSTEM LARGE MISSILE INSULATED LAMINATED GLASS (DRYGLAZED), SHALL COMPLY WITH SECTIONS 2406.1, 2411.4.1 AND 2411.4.2 OF THE FLORIDA BUILDING CODE.

6. ALL STEEL FRAMING SHALL BE WELDED IN ACCORDANCE WITH THE AMERICAN WELDING SOCIETY A.W.S. D.1.1 REGULATIONS. USE CERTIFIED WELDERS. USE E-70XX ELECTRODES. ALL JOINT WELDING BETWEEN ANGLES AND STEEL STRUCTURE SHALL BE 3/16" FILLET WELD TYPE.

7. PROVIDE 1/2" MAX. LOAD BEARING SHIM (TYP.), WHEN ALLOWED BY THIS P.A.D.

8. SEE ANCHOR SCHEDULES ON SHEETS 12 AND 13 FOR ANCHOR TYPE IDENTIFICATION AND SPACING.

9. REMAINING COMPONENTS FOR THIS CURTAIN WALL SYSTEM SHALL BE AS INDICATED ON BILL OF MATERIALS, SHEETS 4 AND 5 OF THIS DRAWING.

10. ALL ALUMINUM EXTRUSIONS IN CONTACT WITH STEEL AND CONCRETE SHALL COMPLY WITH SECTIONS 2003.8.4.2 AND 2003.8.4.4 OF THE FLORIDA BUILDING CODE, RESPECTIVELY.

11. SHOP DRAWINGS PREPARED BASED ON THIS APPROVAL AND TAKING INTO ACCOUNT THE SPECIFIC JOB CONDITIONS, SHALL BE SUBMITTED TO THE BUILDING OFFICIAL AS PART OF THE PERMIT DOCUMENTS.

12. SUBSTRATE MATERIAL NOTED ON THESE DRAWINGS AS "BY OTHERS" MUST WITHSTAND THE LOADS IMPOSED BY THE CURTAIN WALL SYSTEM.

13. THIS PRODUCT'S INSTALLATION SHALL COMPLY WITH ALL SPECS INDICATED IN THIS DRAWING PLUS ANY BUILDING AND ZONING REGULATIONS PROVIDED BY THE JURISDICTION WHERE PERMIT IS APPLIED TO.

14. (a) THIS P.A.D. PREPARED BY THIS ENGINEER IS GENERIC AND DOES NOT PROVIDE INFORMATION FOR A SITE SPECIFIC PROJECT; i.e. WHERE THE SITE CONDITIONS DEVIATE FROM THE P.A.D.

    (b) CONTRACTOR TO BE RESPONSIBLE FOR THE SELECTION, PURCHASE AND INSTALLATION INCLUDING LIFE SAFETY OF THIS PRODUCT, BASED ON THIS P.A.D., PROVIDED HE/SHE DOES NOT DEVIATE FROM THE CONDITIONS DETAILED ON THIS DOCUMENT. CONSTRUCTION SAFETY AT SITE IS THE CONTRACTOR'S RESPONSIBILITY.

    (c) THIS P.A.D. WILL BE CONSIDERED INVALID IF ALTERED BY ANY MEANS.

    (d) SITE SPECIFIC PROJECTS SHALL BE PREPARED BY A FLORIDA REGISTERED ENGINEER OR ARCHITECT WHICH WILL BECOME THE ENGINEER OF RECORD (E.O.R.) FOR THE PROJECT AND WHO WILL BE RESPONSIBLE FOR THE PROPER USE OF THE P.A.D. ENGINEER OF RECORD, ACTING AS DELEGATED ENGINEER TO THE P.A.D. ENGINEER, SHALL SUBMIT TO THIS LATTER THE SITE SPECIFIC DRAWINGS FOR REVIEW.

    (e) ORIGINAL P.A.D. SHALL BEAR THE DATE AND ORIGINAL SEAL AND SIGNATURE OF THE PROFESSIONAL ENGINEER OF RECORD THAT PREPARED IT.

15. CURTAIN WALL MANUFACTURER'S LABEL SHALL BE PLACED ON A READILY VISIBLE LOCATION. ONE LABEL SHALL BE PLACED FOR EVERY UNIT. LABEL SHALL READ AS FOLLOWS:

Oldcastle
BuildingEnvelope™
TERRELL TX.
MIAMI-DADE COUNTY PRODUCT CONTROL APPROVED.
RELIANCE STORMMAX ALUMINUM CURTAIN WALL SYSTEM (DRYGLAZED) - L.M.I.

INDEX:

SHEET 1: GENERAL NOTES, INDEX AND INSTRUCTIONS.
SHEET 2: RELIANCE STORMMAX IMPACT RESISTANT CAPTURED CURTAIN WALL SYSTEM COMPONENTS DRYGLAZED.
SHEET 3: RELIANCE STORMMAX IMPACT RESISTANT CAPTURED CURTAIN WALL SYSTEM COMPONENTS (DG) (CONTINUED).
SHEET 4: BILL OF MATERIALS.
SHEET 5: BILL OF MATERIALS (CONTINUED).
SHEET 6: ISOMETRIC ELEVATION FOR RELIANCE STORMMAX IMPACT RESISTANT CAPTURED CURTAIN WALL SYSTEM (DG).
SHEET 7: TYPICAL GLAZING DETAILS.
SHEET 8: MAX. FRAME WIDTH "b" & FRAME LENGTH "a" VERSUS A.S.D. DESIGN PRESSURE RATING (p.s.f.) SCHEDULE.
SHEET 9: DEFINITIONS OF MULLION SECTIONS FOR SINGLE SPAN.
SHEET 9A: MAX. A.S.D. DESIGN PRESSURE RATING FOR STD, DOOR JAMB, CORNER & JAMB MULLIONS FOR SINGLE SPAN.
SHEET 10: DEFINITONS OF MULLION SECTIONS FOR TWIN SPAN.
SHEET 10A: MAX. A.S.D. DESIGN PRESSURE RATING FOR STD, JAMB, DOOR JAMB AND CORNER MULLIONS FOR TWIN SPAN.
SHEET 11: OPTIONS FOR JAMB, STANDARD AND CORNER MULLIONS SPLICED TWIN SPAN CURTAIN WALL SYSTEM.
SHEET 11A: OPTIONS FOR JAMB, STANDARD AND CORNER MULLIONS CONTINUOUS TWIN SPAN CURTAIN WALL SYSTEM.
SHEET 12: MAX. A.S.D. DESIGN PRESSURE RATING FOR SINGLE & TWIN SPAN STANDARD OR CORNER MULLIONS CONNECTION
SHEET 13: MAX. A.S.D. DESIGN PRESSURE RATING FOR SINGLE & TWIN SPAN JAMB OR DOOR JAMB MULLIONS CONNECTION
SHEET 14: HEAD CONNECTION DETAILS (SIDE VIEWS), DRYGLAZED.
SHEET 15: HORIZONTAL (NON EXPANSION) CONNECTION DETAILS FOR INSULATED GLASS (SIDE VIEWS), DRYGLAZED.
SHEET 16: HORIZONTAL (NON EXPANSION) CONNECTION DETAIL FOR INSULATED GLASS (SIDE VIEW), DRYGLAZED.
SHEET 17: EXPANSION HORIZONTAL CONNECTION DETAILS (SIDE VIEWS), DRYGLAZED.
SHEET 18: SILL CONNECTION DETAILS (SIDE VIEWS), DRYGLAZED.
SHEET 19: SILL/HEAD CONNECTION DETAILS FOR STANDARD MULLION AT SINGLE & TWIN SPAN (PLAN).
SHEET 20: SILL/HEAD CONNECTION DETAILS FOR JAMB MULLION AT SINGLE & TWIN SPAN (PLAN).
SHEET 21: SILL/HEAD CONNECTION DETAILS FOR CORNER MULLION AT SINGLE & TWIN SPAN (PLAN).
SHEET 22: HORIZONTAL SECTIONS AT STANDARD MULLIONS (PLAN), DRYGLAZED.
SHEET 23: HORIZONTAL SECTIONS AT JAMB MULLIONS (PLAN), DRYGLAZED.
SHEET 24: HORIZONTAL SECTION AT CORNER MULLION (PLAN), DRYGLAZED.
SHEET 25: HORIZONTAL SECTION AT INSIDE CORNER JAMB MULLION (PLAN), DRYGLAZED.
SHEET 26: APPLICABILITY OF REQUIRED ANCHORS & FASTENERS FOR MULLION TYPE & SUBSTRATE.
SHEET 27: JAMB MULLION INTERMEDIATE SUPPORT W/ DEAD & WIND LOAD ANCHOR AT TWIN SPAN.
SHEET 28: STANDARD MULLION INTERMEDIATE SUPPORT W/ DEAD & WIND LOAD ANCHOR AT TWIN SPAN.
SHEET 29: CORNER MULLION INTERMEDIATE SUPPORT W/ DEAD & WIND LOAD ANCHOR AT TWIN SPAN.
SHEET 30: CORNER MULLION INTERMEDIATE SUPPORT W/ DEAD & WIND LOAD ANCHOR AT TWIN SPAN.
SHEET 31: JAMB & STANDARD MULLION SPLICES AT TWIN SPAN (PLAN), DRYGLAZED.
SHEET 32: JAMB & STANDARD MULLION SPLICES AT TWIN SPAN (SECTION), DRYGLAZED.
SHEET 33: CORNER MULLION SPLICE DETAIL AT TWIN SPAN (PLAN), DRYGLAZED.
SHEET 34: CORNER MULLION SPLICE DETAIL AT TWIN SPAN (SECTION), DRYGLAZED.
SHEET 35: DOOR HEADER CONNECTION TO CURTAIN WALL HORIZONTALS.
SHEET 36: DOOR JAMBS CONNECTION TO CURTAIN WALL.
SHEET 37: SILL CONNECTION FOR JAMB MULLION & DOOR JAMB MULLION FOR DOORS INSTALLED AT EXISTING STRUCTURE OR ADJACENT TO CURTAIN WALL.
SHEET 38: SILL CONNECTION FOR JAMB MULLION & DOOR JAMB MULLION FOR DOORS INSTALLED AT EXISTING STRUCTURE OR ADJACENT TO CURTAIN WALL.
SHEET 39: ZONE PLUG INSTALLATION.
SHEET 40: PRESSURE PLATE AND FACE CAP INSTALLATION.

INSTRUCTIONS:

STEP 1: DETERMINE A.S.D. DESIGN WIND LOAD REQUIREMENTS BASED ON WIND VELOCITY, BUILDING HEIGHT, RISK CATEGORY BUILDING, WIND ZONE, USING APPLICABLE ASCE 7-10 STANDARD.

STEP 2: GO TO SCHEDULE ON SHEET 8 TO DETERMINE MAXIMUM A.S.D. DESIGN PRESSURE RATING "W" (psf) OF DESIRED GLASS SIZE BASED ON GLASS PANEL DIMENSIONS.

STEP 3: DETERMINE MAXIMUM MULLION AND JAMB SPAN "L"(FT) FOR A GIVEN MULLION EFFECTIVE SPACING "b", FOR SINGLE AND TWIN SPANS ON SCHEDULES ON SHEETS 9A AND 10A.

STEP 4: USING SCHEDULES ON SHEETS 12 AND 13 SELECT ANCHOR OPTION FOR MULLIONS AND JAMBS WITH A.S.D. DESIGN PRESSURE RATING EQUAL OR GREATER THAN A.S.D. DESIGN LOAD SPECIFIED IN STEP 1.

STEP 5: THE LOWEST VALUE OF A.S.D. DESIGN PRESSURE RATING RESULTING FROM STEPS 2, 3, AND 4 SHALL APPLY TO THE ENTIRE SYSTEM.

FLORIDA BUILDING CODE (High Velocity Hurricane Zone)

RELIANCE STORMMAX CAPTURED CURTAIN WALL SYSTEM
LARGE MISSILE IMPACT INSULATED LAMINATED GLASS (DRYGLAZED)

A.G. DRAWN BY: | 10/12/12 DATE | 12-154 DRAWING No | SHEET 1 OF 40

Oldcastle BuildingEnvelope™
803 Airport Rd - Terrell, TX 75160
www.OldcastleBE.com - Phone 800-869-4567

REV. No.	DESCRIPTION	DATE	REV. No.	DESCRIPTION	DATE
1	-	-	3	-	-
2	-	-	4	-	-

©2012 TILTECO, INC

TILTECO INC.
TILLIT TESTING & ENGINEERING COMPANY
6355 N.W. 36th. St., Ste. 305, VIRGINIA GARDENS, FL 33166
Phone : (305)871-1530 . Fax : (305)871-1531
e-mail: tilteco@aol.com
EB-0006719
WALTER A. TILLIT Jr. P.E.
FLORIDA Lic. # 44167

WALTER A. TILLIT JR. LICENSE No. 44167 STATE OF FLORIDA PROFESSIONAL ENGINEER

P.E. SEAL/SIGNATURE/DATE

Approved as complying with the Florida Building Code
Date 05/30/2013
NOA# 13-0118.05
Miami-Dade Product Control
By

MIAMI-DADE COUNTY

RELIANCE STORMMAX CURTAIN WALL SYSTEM COMPONENTS DRYGLAZED

1 CW-2101 SETTING BLOCK

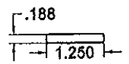

2 CW-2102 SETTING BLOCK

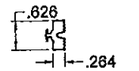

11 GP-107 ISOLATOR

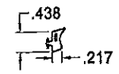

12 GP-117 GASKET

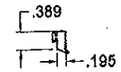

13 GP-160 GASKET

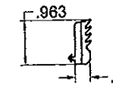

63 GP-1015 GASKET

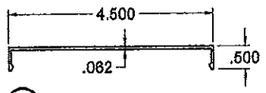

14 HW-100 FACE CAP

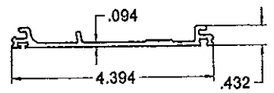

15 HW-102 PRESSURE PLATE

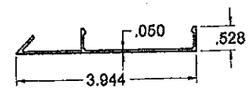

16 HW-115 FACE CAP

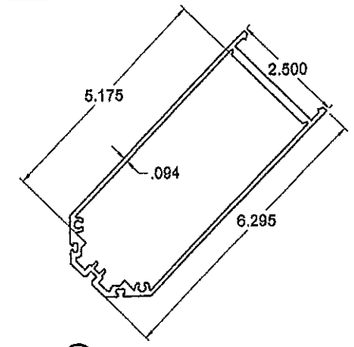

20 HW-240 CORNER MULLION

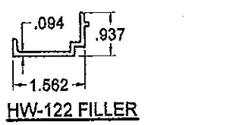

17 HW-122 FILLER

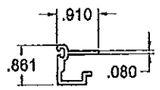

18 HW-130 GLAZING ADAPTOR

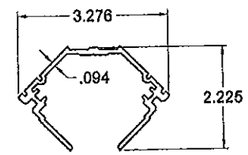

19 HW-132 CORNER PRESSURE PLATE

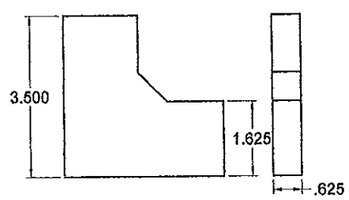

21 HW-312 CORNER BRIDGE

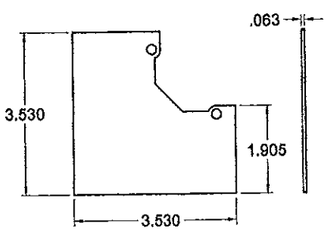

22 HW-323 CORNER MULL CAP

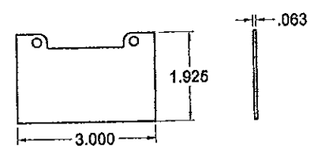

23 HW-325 MULL CAP

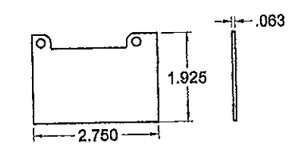

24 HW-338 JAMB CAP

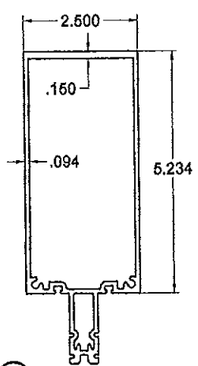

25 HW-500 MULLION

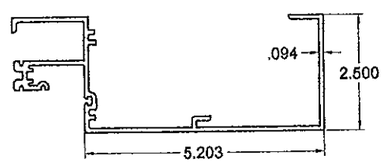

26 HW-501 HEAD

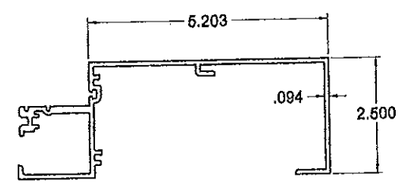

27 HW-502 SILL

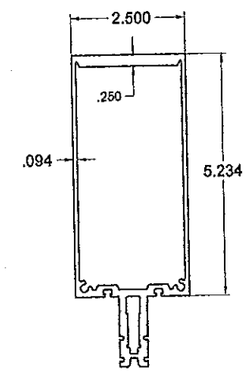

28 HW-510 HEAVY MULLION

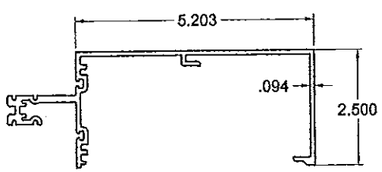

29 HW-532 ROLL OVER HORIZONTAL

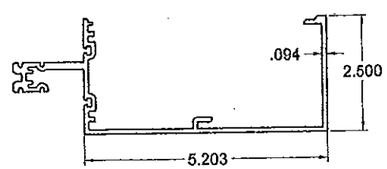

30 HW-533 ROLL UNDER HORIZONTAL

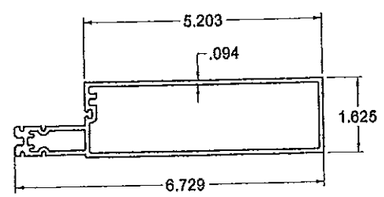

31 HW-536 HORIZONTAL

FLORIDA BUILDING CODE (High Velocity Hurricane Zone)

RELIANCE STORMMAX CAPTURED CURTAIN WALL SYSTEM
LARGE MISSILE IMPACT INSULATED LAMINATED GLASS (DRYGLAZED)

Oldcastle BuildingEnvelope™
803 Airport Rd - Terrell, TX 75160
www.OldcastleBE.com - Phone 800-969-4567

REV. No	DESCRIPTION	DATE	REV. No	DESCRIPTION	DATE
1	-	-	3	-	-
2	-	-	4	-	-

A.G. DRAWN BY:
10/12/12 DATE
12-154 DRAWING No
SHEET 2 OF 40

©2012 TILTECO, INC

TILTECO INC.
TILLIT TESTING & ENGINEERING COMPANY
6355 N.W. 36th. St., Ste. 305, VIRGINIA GARDENS, FL 33166
Phone : (305)871-1530 . Fax : (305)871-1531
e-mail: tilteco@aol.com
EB-0006719
WALTER A. TILLIT Jr. P.E.
FLORIDA Lic. # 44167

WALTER A. TILLIT JR. LICENSE No. 44167 STATE OF FLORIDA PROFESSIONAL ENGINEER

P.E. SEAL/SIGNATURE/DATE

Approved as complying with the Florida Building Code
Date 03/30/2013
NOA# 13-0110.03
Miami-Dade Product Control
By

MIAMI-DADE COUNTY

RELIANCE STORMMAX CURTAIN WALL SYSTEM COMPONENTS DRYGLAZED (CONTINUED)

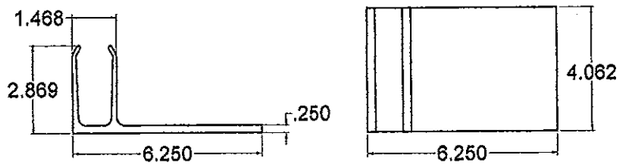

32 HW-103-01 "F" ANCHOR (JAMB MULLION)

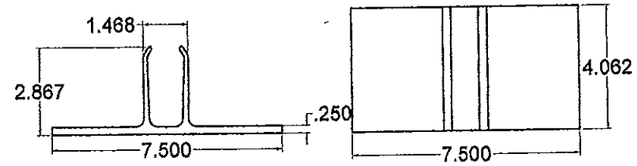

33 HW-105-01 "T" ANCHOR (STANDARD MULLION & TOP OF DOOR JAMB MULLION)

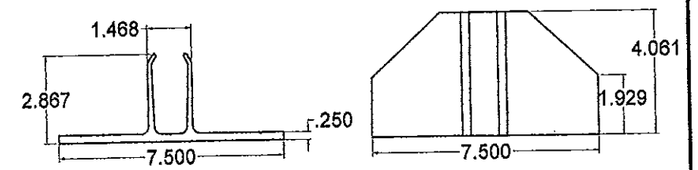

34 HW-105-02 "T" ANCHOR (CORNER MULLION)

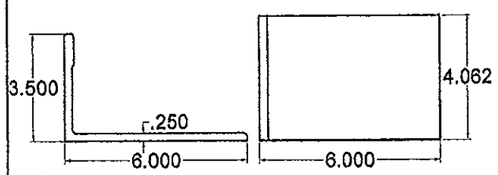

35 HW-174-01 "L" ANCHOR (JAMB & STD MULLION)

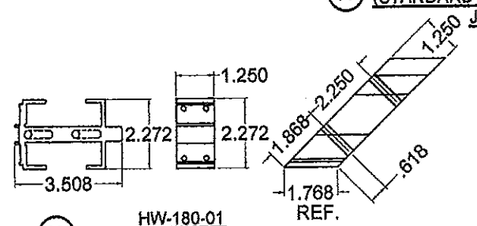

36 HW-180-01 CORNER SHEAR BLOCK

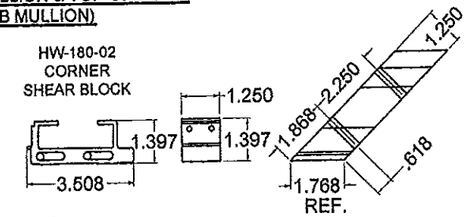

37 HW-180-02 CORNER SHEAR BLOCK

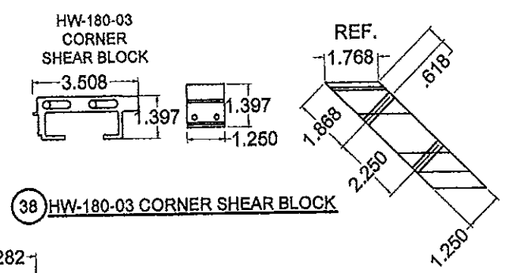

38 HW-180-03 CORNER SHEAR BLOCK

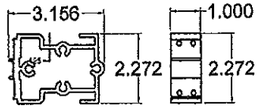

39 HW-183-01 SHEAR BLOCK

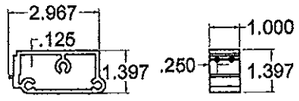

40 HW-184-01 SHEAR BLOCK

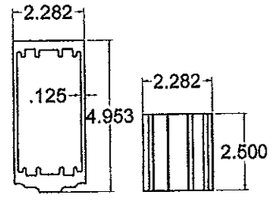

43 HW-200-01 (HW-240) STANDARD ANCHOR SLEEVE

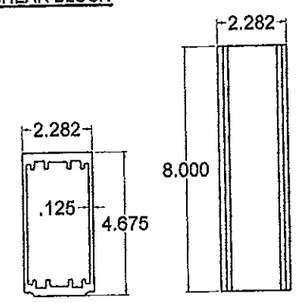

45 HW-201-02 HEAVY MULLION HARD SPLICE

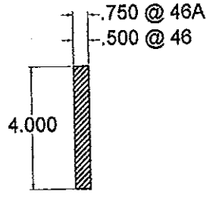

46 46A RS-15 @ 46 RS-17 @ 46A STEEL REINFORCEMENT

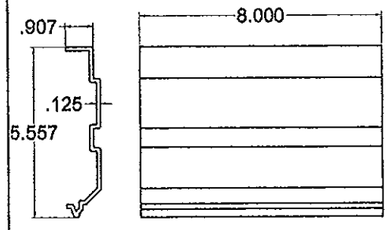

41 HW-191-01 CORNER SPLICE

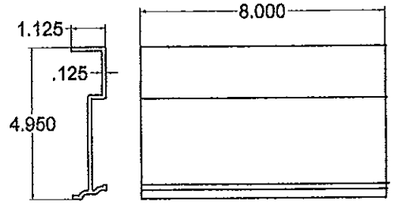

42 HW-194-01 MULLION SPLICE

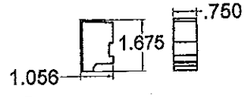

52 WW-352 ZONE PLUG

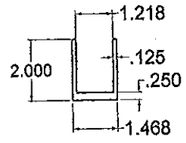

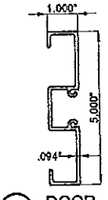

62 DOOR JAMB/HEADER D-226

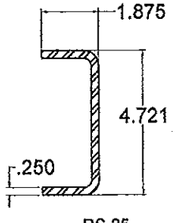

47 RS-25 STEEL REINFORCEMENT

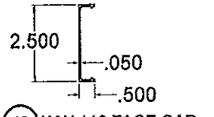

48 WW-110 FACE CAP

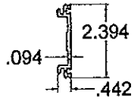

49 WW-162 PRESSURE PLATE

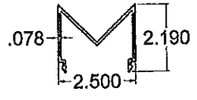

50 WW-224 COVER

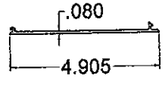

51 WW-237 FILLER

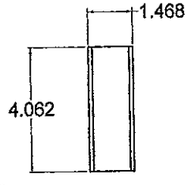

60 HW-108-01 "U" ANCHOR

FLORIDA BUILDING CODE (High Velocity Hurricane Zone)

RELIANCE STORMMAX CAPTURED CURTAIN WALL SYSTEM
LARGE MISSILE IMPACT INSULATED LAMINATED GLASS (DRYGLAZED)

Oldcastle BuildingEnvelope™
803 Airport Rd - Terrell, TX 75160
www.OldcastleBE.com - Phone 800-869-4567

REV. No	DESCRIPTION	DATE	REV. No	DESCRIPTION	DATE
1	-	-	3	-	-
2	-	-	4	-	-

A.G. DRAWN BY: | 10/12/12 DATE | 12-154 DRAWING No | SHEET 3 OF 40

©2012 TILTECO, INC

TILTECO INC.
TILLIT TESTING & ENGINEERING COMPANY
6355 N.W. 36th, Ste. 305, VIRGINIA GARDENS, FL 33166
Phone : (305)871-1530, Fax : (305)871-1531
e-mail: tilteco@aol.com
EB-0006719
WALTER A. TILLIT Jr. P.E.
FLORIDA Lic. # 44167

WALTER A. TILLIT JR. LICENSE No. 44167 STATE OF FLORIDA PROFESSIONAL ENGINEER

P.E. SEAL/SIGNATURE/DATE

Approved as complying with the Florida Building Code
Date 05/30/2013
NOA# 13-0110.05
Miami-Dade Product Control
By

MIAMI-DADE COUNTY

BILL OF MATERIALS

ITEM No.	PART NUMBER	DESCRIPTION	DIMENSIONS	MATERIAL	MANUFACTURER	NOTES
1.	CW-2101	SETTING BLOCK	.50 X .188 X 4.00	EPDM 80 DUROMETER	EPG	
2.	CW-2102	SETTING BLOCK	1.250 X .188 X 4.00	EPDM 80 DUROMETER	EPG	
4.	FS-7	HORIZ. TO SHEAR BLOCK FASTENER	#10 x 3/4" PFH	ZINC COATED STEEL	VARIES	MIN. Fu=124 ksi & Fy=92 ksi
5.	FS-9	SHEAR BLOCK ASSEMBLY SCREW	#14 x 1-1/2" HH	ZINC COATED STEEL	VARIES	MIN. Fu=124 ksi & Fy=92 ksi
6.	FS-259	JAMB TAP PLATE FASTENER	1/4-20 X 1" PFH TYPE F	ZINC COATED STEEL	VARIES	MIN. Fu=124 ksi & Fy=92 ksi
7.	FS-320	END CAP ATTACHMENT FASTENER	#10 x 1/2" U-DRIVE	ZINC COATED STEEL	VARIES	MIN. Fu=124 ksi & Fy=92 ksi
8.	FS-322	POCKET FILLER ATTACHMENT	#12-14 x 1" HH	ZINC COATED STEEL	VARIES	MIN. Fu=124 ksi & Fy=92 ksi
9.	FS-325	PRESSURE PLATE SCREW	#12-14 x 1-1/2" HH	STALGARD STEEL	ELCO	
10.	FS-328	ADAPTOR ATTACHEMENT SCREW	#10 X 1-1/2" PFH	ZINC COATED STEEL	VARIES	
11.	GP-107	ISOLATOR GASKET	.264 X .626	EPDM 70 DUROMETER	EPG	
12.	GP-117	EXTERIOR GASKET	.217 X .438	EPDM 60 DUROMETER	EPG	
13.	GP-160	EXTERIOR GASKET AT EXP. HORIZONTAL	.195 X .380	EPDM 60 DUROMETER	TREMCO	
14.	HW-100	FACE CAP	4.50 X .50 X .062	6063-T5 ALUMINUM	OBE	
15.	HW-102	PRESSURE PLATE	4.394 X .432 X .094	6063-T6 ALUMINUM	OBE	
16.	HW-115	FACE CAP	3.94 X .528 X .050	6063-T5 ALUMINUM	OBE	
17.	HW-122	POCKET FILLER	1.562 X .937 X .094	6063-T5 ALUMINUM	OBE	
18.	HW-130	GLAZING ADAPTOR	.861 X .910 X .080	6063-T5 ALUMINUM	OBE	
19.	HW-132	CORNER PRESSURE PLATE	3.276 X 2.225 X .094	6063-T6 ALUMINUM	OBE	
20.	HW-240	CORNER MULLION	6.295 X 2.50 X .094	6063-T6 ALUMINUM	OBE	
21.	HW-312	CORNER BRIDGE	3.50 X 1.625 X .625	EPDM SPONGE 55 SHRE	EPG	
22.	HW-323	CORNER MULL CAP	3.00 X 1.925 X .063	5005-H32 ALUMINUM	OBE	
23.	HW-325	MULL CAP	3.00 X 1.925 X .063	5005-H32 ALUMINUM	OBE	
24.	HW-338	JAMB CAP	2.75 X 1.925 X .063	5005-H32 ALUMINUM	OBE	
25.	HW-500	MULLION	2.50 X 5.00 X .094	6063-T6 ALUMINUM	OBE	
26.	HW-501	HEAD	2.50 X 5.203 X .094	6063-T6 ALUMINUM	OBE	
27.	HW-502	SILL	2.50 X 5.203 X .094	6063-T6 ALUMINUM	OBE	
28.	HW-510	HEAVY MULLION	2.50 X 5.234 X .250	6063-T6 ALUMINUM	OBE	
29.	HW-532	ROLL OVER HORIZONTAL	2.50 X 5.203 X .094	6063-T6 ALUMINUM	OBE	
30.	HW-533	ROLL UNDER HORIZONTAL	2.50 X 5.203 X .094	6063-T6 ALUMINUM	OBE	
31.	HW-536	EXPANSION HORIZONTAL	1.625 X 6.729 X .094	6063-T6 ALUMINUM	OBE	
32.	HW-103-01	"F" ANCHOR (JAMB MULLION)	6.250 X 2.869 X .25 X 4.062	6063-T6 ALUMINUM	OBE	USE TOP & BOTT.

FLORIDA BUILDING CODE (High Velocity Hurricane Zone)

RELIANCE STORMMAX CAPTURED CURTAIN WALL SYSTEM
LARGE MISSILE IMPACT INSULATED LAMINATED GLASS (DRYGLAZED)

Oldcastle BuildingEnvelope™
803 Airport Rd - Terrell, TX 75160
www.OldcastleBE.com - Phone 800-969-4567

REV. No.	DESCRIPTION	DATE	REV. No.	DESCRIPTION	DATE
1	-	-	3	-	-
2	-	-	4	-	-

A.G. DRAWN BY:
10/12/12 DATE
12-154 DRAWING No
SHEET 4 OF 40

©2012 TILTECO, INC

TILTECO INC.
TILLIT TESTING & ENGINEERING COMPANY
6355 N.W. 36th St., Ste. 305, VIRGINIA GARDENS, FL 33166
Phone : (305)871-1530 Fax : (305)871-1531
e-mail: tilteco@aol.com
EB-0006719
WALTER A. TILLIT Jr., P.E.
FLORIDA Lic. # 44167

WALTER A. TILLIT JR. LICENSE No. 44167 STATE OF FLORIDA PROFESSIONAL ENGINEER

P.E. SEAL/SIGNATURE/DATE

Approved as complying with the Florida Building Code
Date 10/30/2013
NOA# 13-0116.02
Miami-Dade Product Control
By

MIAMI-DADE COUNTY

BILL OF MATERIALS (CONTINUED)

ITEM No.	PART NUMBER	DESCRIPTION	DIMENSIONS	MATERIAL	MANUFACTURER	NOTES
33.	HW-105-01	"T" ANCHOR (STD & DOOR JAMB MULLION)	7.50 X 2.869 X .25 X 4.062	6063-T6 ALUMINUM	OBE	TOP & BOTT. AT STD MULLION TOP AT DOOR JAMB MULLION
34.	HW-105-02	"T" ANCHOR (CORNER MULLION)	7.50 X 2.869 X .25 X 4.061	6063-T6 ALUMINUM	OBE	SEE DETAIL
35.	HW-174-01	"L" ANCHOR (STANDARD & JAMB MULLION)	3.50 X 6.0 X .25 X 4.062	6063-T6 ALUMINUM	OBE	USE TOP & BOTT.
36.	HW-180-01	SHEAR BLOCK	3.508 X 2.272 X .50	6063-T6 ALUMINUM	OBE	
37.	HW-180-02	SHEAR BLOCK	3.508 X 2.272 X .50	6063-T6 ALUMINUM	OBE	
38.	HW-180-03	SHEAR BLOCK	3.508 X 2.272 X .50	6063-T6 ALUMINUM	OBE	
39.	HW-183-01	SHEAR BLOCK	2.827 X 2.272 X .125	6063-T6 ALUMINUM	OBE	
40.	HW-184-01	SHEAR BLOCK	3.153 X 1.397 X .125	6063-T6 ALUMINUM	OBE	
41.	HW-191-01	CORNER SPLICE	5.557 X 1.125 X 8.00 X.126	6063-T6 ALUMINUM	OBE	
42.	HW-194-01	JAMB & STANDARD MULLION SPLICE	4.950 X 1.125 X 8.00 X.125	6063-T6 ALUMINUM	OBE	
43.	HW-200-01	CORNER MULLION ANCHOR SLEEVE	2.282 X 4.953 X 2.50 X .125	6063-T6 ALUMINUM	OBE	
45.	HW-201-02	HEAVY MULL SPLICE	2.282 X 4.675 X 8.00 X .125	6063-T6 ALUMINUM	OBE	
46.	RS-15	REINFORCEMENT STEEL	.50 X 4.00	ASTM A-36	OBE	ZINC PAINTED STEEL
46A.	RS-17	REINFORCEMENT STEEL	.75 X 4.00	ASTM A-36	OBE	ZINC PAINTED STEEL
47.	RS-25	REINFORCEMENT STEEL	1.875 X 4.721 X .25	ASTM A-36	OBE	ZINC PAINTED STEEL
48.	WW-110	FACE CAP	.50 X 2.50 X .050	6063-T5 ALUMINUM	OBE	
49.	WW-162	PRESSURE PLATE	.442 X 2.394 X .094	6063-T6 ALUMINUM	OBE	
50.	WW-224	COVER	2.50 X 2.190 X .078	6063-T5 ALUMINUM	OBE	
51.	WW-237	FILLER	.204 X 4.905 X .080	6063-T5 ALUMINUM	OBE	
52.	WW-352	ZONE PLUG	1.056 X 1.675 x .75	ABS PLASTIC	CHARLOMA	
53.	795	PERIMETER SEAL		SILICONE	DOW CORNING	
54.	SCS 2000	PERIMETER SEAL		SILICONE	GE	
57.	FASTENERS	MID POINT ANCHOR AT MULLIONS	5/8-18 X 4 1/2" HH	GRADE 5 ZINC PLATED	VARIES	
58.	FASTENERS	MID POINT ANCHOR AT MULLIONS	5/8-18 X NUTS	GRADE 5 ZINC PLATED	VARIES	
59.	FASTENERS	MID POINT ANCHOR AT JAMBS	5/8-18 X 1 3/4" HH FN THREAD	GRADE 5 ZINC PLATED	VARIES	
60.	HW -108-01 "U" ANCHOR	AT DOOR JAMB MULLION & AT JAMB MULLION AT DOOR W/ NON SIDELITE & OPTIONAL AT JAMB MULLION	2.875 X 1.468 X 0.25 X 4.062	6063-T6 ALUMINUM	OBE	USE ONLY AT BOTT.
62.	D-226	DOOR JAMB/HEADER	1.00" X 5.00" X .094"	6063-T6 ALUMINUM	OBE	
63.	GP-1015	DRY GLAZE GASKET	.319 X .962	EPDM/SPONGE 70 DU	EPG	
64.	INSULATING GLASS UNIT SPACER	MODEL H 6.5	1/2" WIDE X 1/4" HIGH x 0.014" THK.	3105-H24 ALUM. ALLOY	PROFILGLASS	

FLORIDA BUILDING CODE (High Velocity Hurricane Zone)

A.G. DRAWN BY:

10/12/12 DATE

12-154 DRAWING No.

SHEET 5 OF 40

RELIANCE STORMMAX CAPTURED CURTAIN WALL SYSTEM
LARGE MISSILE IMPACT INSULATED LAMINATED GLASS (DRYGLAZED)

Oldcastle BuildingEnvelope™
803 Airport Rd. - Terrell, TX 75160
www.Oldcastle168E.com - Phone 800-869-4567

REV. No.	DESCRIPTION	DATE	REV. No.	DESCRIPTION	DATE
1	NOC COMMENTS	06/07/13	3		
2			4		

©2012 TILTECO, INC

TILTECO INC.
TILLIT TESTING & ENGINEERING COMPANY
6355 N.W. 36th. St. Ste. 205, VIRGINIA GARDENS, FL 33166
Phone : (305)871-1530 , Fax : (305)871-1531
e-mail: tilteco@aol.com
EB-0006719
WALTER A. TILLIT Jr. P.E.
FLORIDA Lic. # 44167

WALTER A. TILLIT JR. LICENSE No. 44167 STATE OF FLORIDA PROFESSIONAL ENGINEER

P.E. SEAL/SIGNATURE/DATE

Approved as complying with the Florida Building Code
Date 05/29/2013
NOA# 13-0110.01
Miami-Dade Product Control
By

MIAMI-DADE COUNTY

ISOMETRIC ELEVATION FOR RELIANCE STORMMAX
IMPACT RESISTANT CAPTURED CURTAIN WALL SYSTEM (DRYGLAZED)

N.T.S.

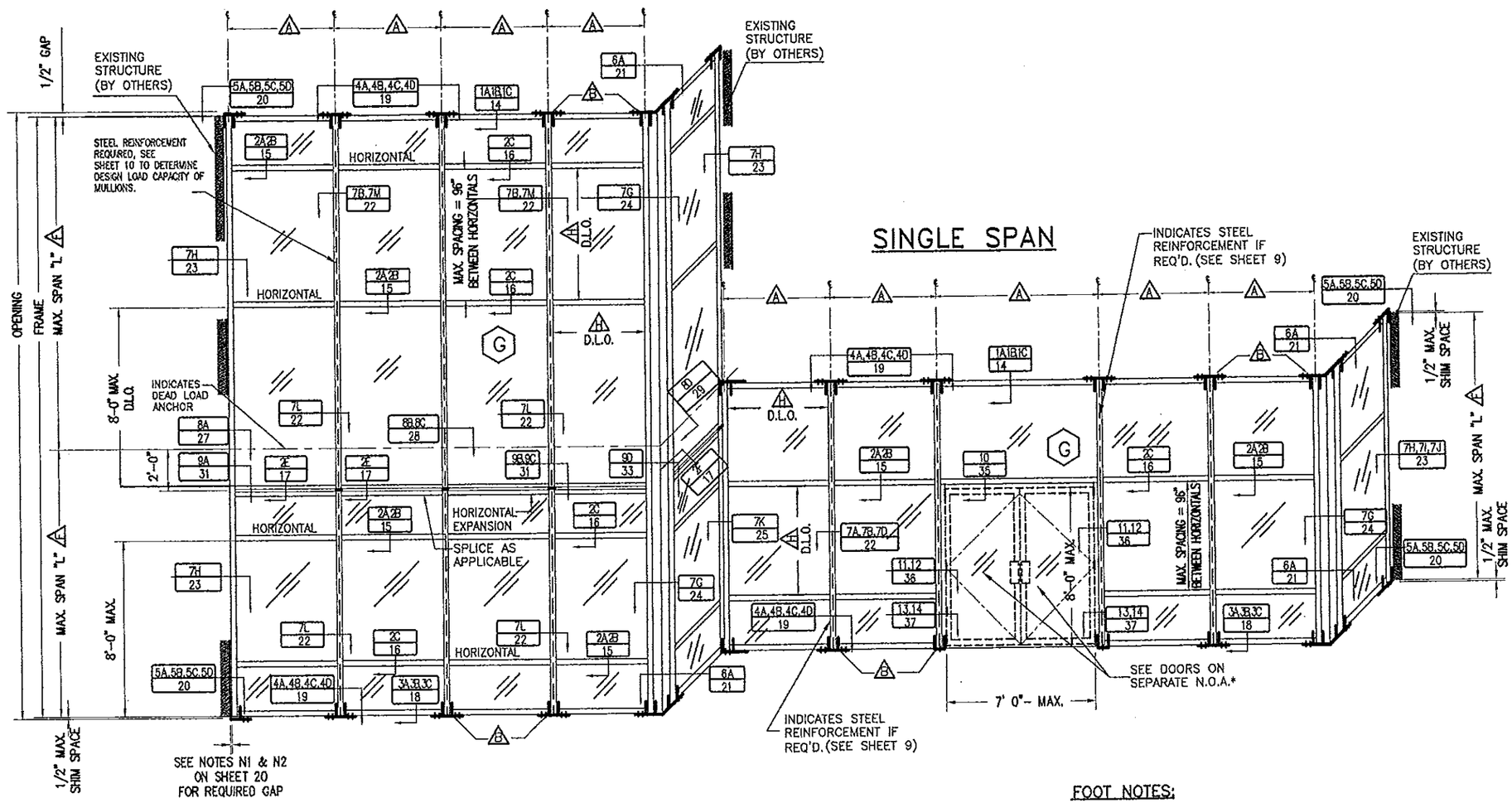

* WHEN INSTALLING A DOOR IN THIS SYSTEM, PANELS ADJACENT TO DOOR MUST BE GLAZED WITH SAFETY GLASS, PER GLASS TYPE G4A.

FOOT NOTES:

- (A) FOR MULLION AND JAMB SPACING AND MAX. MULLION SPAN SEE SHEETS 9A & 10A
- (B) FOR HEAD AND SILL AT SINGLE & TWIN SPAN, ANCHORS TYPES SEE SHEET 12 & 13.
- (F) FOR MAXIMUM MULLION AND JAMB SPAN SEE SHEETS 9A & 10A.
- (G) FOR GLAZING DETAILS AND GLASS SCHEDULE SEE SHEET 7.
- (H) FOR MAXIMUM D.L.O. SEE SCHEDULE ON SHEET 8.

FLORIDA BUILDING CODE (High Velocity Hurricane Zone)

©2012 TILTECO, INC

TILTECO INC.
TILLIT TESTING & ENGINEERING COMPANY
6355 N.W. 36th. St., Ste. 305, VIRGINIA GARDENS, FL 33166
Phone : (305)871-1530 , Fax : (305)871-1531
e-mail: tiltecoe@aol.com
EB-0006719
WALTER A. TILLIT Jr. P.E.
FLORIDA Lic. # 44167

RELIANCE STORMMAX CAPTURED CURTAIN WALL SYSTEM
LARGE MISSILE IMPACT INSULATED LAMINATED GLASS (DRYGLAZED)

Oldcastle BuildingEnvelope™
803 Airport Rd - Terrell, TX 75160
www.OldcastleBE.com - Phone 800-869-4567

REV. No.	DATE	DESCRIPTION
1	-	-
2	-	-
3	-	-
4	-	-

A.G.	DRAWN BY:
10/12/12	DATE
12-154	DRAWING No
SHEET 6 OF 40	

WALTER A. TILLIT JR. LICENSE No. 44167 STATE OF FLORIDA PROFESSIONAL ENGINEER

P.E. SEAL/SIGNATURE/DATE

Approved as complying with the Florida Building Code
Date 05/30/2013
NOA# 13-0110.05
Miami-Dade Product Control
By

MIAMI-DADE COUNTY

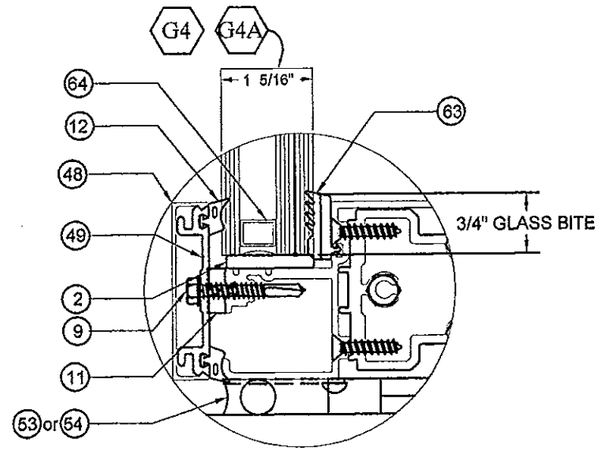

INSULATED LAMINATED GLAZING DETAIL

INSULATED LAMINATED GLASS SCHEDULE

GLASS LABEL	GLASS COMPOSITION	MANUFACTURER NAME	MAX. D.L.O.	MISSILE TYPE
G4	1 5/16" INSULATED LAMINATED GLASS CONSISTING OF EXTERIOR 1/4" H.S. - 1/2" AIR SPACE - 1/4" H.S. - O90° SENTRYGLAS IONOPLAST INTERLAYER - 1/4" H.S.	DUPONT	SEE SCHEDULE ON SHEET 8	LARGE MISSILE IMPACT
G4A	1 5/16" INSULATED LAMINATED GLASS CONSISTING OF EXTERIOR 1/4" TEMPERED. - 1/2" AIR SPACE -1/4" H.S. - O90° SENTRYGLAS IONOPLAST INTERLAYER - 1/4" H.S.	DUPONT	SEE SCHEDULE ON SHEET 8	LARGE MISSILE IMPACT

FLORIDA BUILDING CODE (High Velocity Hurricane Zone)

RELIANCE STORMMAX CAPTURED CURTAIN WALL SYSTEM
LARGE MISSILE IMPACT INSULATED LAMINATED GLASS (DRYGLAZED)

Oldcastle BuildingEnvelope™
803 Airport Rd - Terrell, TX 75160
www.OldcastleBE.com - Phone 800-869-4567

REV. No	DESCRIPTION	DATE
1	MDC COMMENTS	05/07/13
2		
3		
4		

A.G.
DRAWN BY:

10/12/12
DATE

12-154
DRAWING No

SHEET 7 OF 40

©2012 TILTECO, INC

TILTECO INC.
TILLIT TESTING & ENGINEERING COMPANY
6355 N.W. 36th. St. Ste. 305, VIRGINIA GARDENS, FL. 33166
Phone : (305)871-1530 , Fax : (305)871-1531
e-mail: tilteco@aol.com
EB-0006719
WALTER A. TILLIT Jr. P.E.
FLORIDA Lic. # 44167

WALTER A. TILLIT JR. LICENSE No. 44167 STATE OF FLORIDA PROFESSIONAL ENGINEER

P.E. SEAL/SIGNATURE/DATE

Approved as complying with the Florida Building Code
Date 3-28-18
NOA# 13-0328.06
Miami-Dade Product Control
By

MIAMI-DADE COUNTY

MAXIMUM FRAME WIDTH "a" AND FRAME LENGTH "b" VERSUS A.S.D. DESIGN PRESSURE RATING (psf) SCHEDULE *

INSULATED LAMINATED GLASS (G4) (G4A)		
DIMENSION "a"	DIMENSION "b"	MAX. A.S.D. DESIGN PRESSURE RATING (psf)
24" OR LESS *	FROM 24" TO 101"	± 70.0
30" OR LESS	FROM 30" TO 101"	± 70.0
36" OR LESS	FROM 36" TO 101"	± 70.0
42" OR LESS	FROM 42" TO 101"	± 70.0
48" OR LESS	FROM 48" TO 101"	± 70.0
54" OR LESS	FROM 54" TO 101"	± 70.0
57.5"OR LESS	FROM 57.5" TO 101"	± 70.0
60" OR LESS	FROM 60" TO 101"	± 70.0
62.5"OR LESS	FROM 62.5" TO 101"	± 70.0
66" OR LESS	FROM 66" TO 95.64"	±66.2
72" OR LESS	FROM 72" TO 87.67"	±60.7
78" OR LESS	FROM 72" TO 80.92"	±56.1

* MIN a= 20 3/4" FOR b/a EQUAL OR GREATER THAN 5.0 @ HEAD & SILL AND MIN a= 28 5/8" FOR b/a EQUAL OR GREATER THAN 5.0 @ JAMBS & MULLIONS.

DIMENSIONS LEGEND

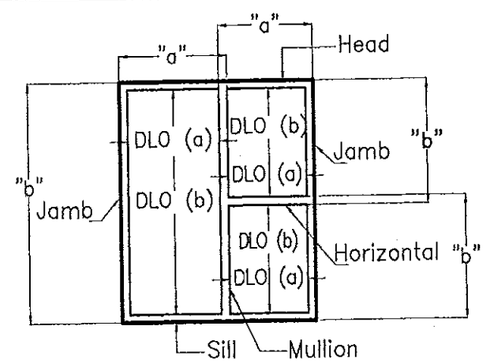

DETERMINATION OF MAXIMUM DAY LIGHT OPENING (D.L.O.) AT EACH END OF GLASS GIVEN "b" & "a"

SIDE	MAX. DAY LIGHT OPENING
	(D.L.O.) Formula
MAX. D.L.O. (a) (SHORT SIDE)	"a"–5.00"
MAX. D.L.O. (b) (LONG SIDE)	"b"–5.00"

FLORIDA BUILDING CODE (High Velocity Hurricane Zone)

A.G. DRAWN BY:
10/12/12 DATE
12–154 DRAWING No
SHEET 8 OF 40

RELIANCE STORMMAX CAPTURED CURTAIN WALL SYSTEM
LARGE MISSILE IMPACT INSULATED LAMINATED GLASS (DRYGLAZED)

Oldcastle BuildingEnvelope™
803 Airport Rd - Terrell, TX 75160
www.OldcastleBE.com - Phone 800-869-4567

REV. No	DESCRIPTION	DATE	REV. No	DESCRIPTION	DATE
1	MDC COMMENTS	05/07/13	3		
2			4		

©2012 TILTECO, INC

TILTECO INC.
TILLIT TESTING & ENGINEERING COMPANY
6355 N.W. 36th. St., Ste. 305, VIRGINIA GARDENS, FL 33166
Phone : (305)871-1530 , Fax : (305)871-1531
e-mail: tilteco@aol.com
EB-0006719
WALTER A. TILLIT Jr. P.E.
FLORIDA Lic. # 44167

WALTER A. TILLIT JR. LICENSE No. 44167 STATE OF FLORIDA PROFESSIONAL ENGINEER

P.E. SEAL/SIGNATURE/DATE

Approved as complying with the Florida Building Code
Date 05/30/2013
NOA# 13-0510.09
Miami-Dade Product Control
By

MIAMI–DADE COUNTY

RELIANCE STORMMAX SINGLE SPAN MULLION

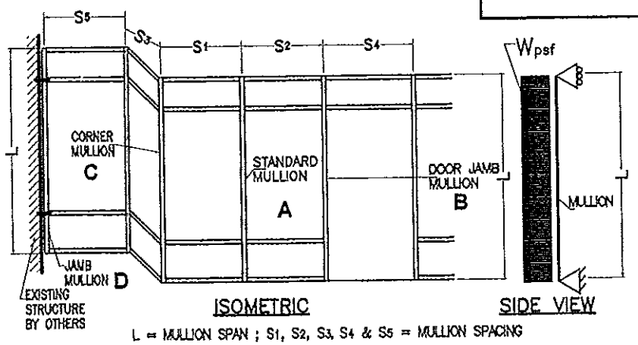

L = MULLION SPAN ; S1, S2, S3, S4 & S5 = MULLION SPACING

EFFECTIVE SPACING $b = \frac{S_1 + S_2}{2}$ (FOR STANDARD MULLION)

EFFECTIVE SPACING $b = \frac{S_1 + S_3}{2}$ (FOR CORNER MULLION)

EFFECTIVE SPACING $b = \frac{S_2 + S_4}{2}$ (FOR DOOR JAMB MULLION)

EFFECTIVE SPACING $b = \frac{S_5}{2}$ (FOR JAMB MULLION)

DEFINITIONS OF MULLION SECTIONS

SECTION 1 :	SINGLE SPAN UNREINFORCED STANDARD MULLION OPTION 1 (SEE SECT. 7A/22)	A
SECTION 2 :	SINGLE SPAN REINFORCED STANDARD MULLION OPTION 2 (SEE SECT. 7B/22)	A
SECTION 3 :	SINGLE SPAN UNREINFORCED STANDARD HEAVY MULLION OPTION 3 (SEE SECT. 7N/22)	A
SECTION 4 :	SINGLE SPAN REINFORCED STANDARD MULLION OPTION 4 (SEE SECT. 7D/22)	A
SECTION 5 :	SINGLE SPAN REINFORCED DOOR JAMB MULLION (SEE DET. 12/38)	B
SECTION 6 :	SINGLE SPAN REINFORCED CORNER MULLION (SEE DET. 7G/24)	C
SECTION 7 :	SINGLE SPAN REINFORCED JAMB MULLION OPTION 1 (SEE SECT. 7H/23)	D
SECTION 8 :	SINGLE SPAN LIGHT JAMB MULLION OPTION 2 (SEE SECT. 7I/23)	D
SECTION 9 :	SINGLE SPAN LIGHT REINFORCED JAMB MULLION OPTION 3 (SEE SECT. 7J/23)	D

STANDARD MULLION OPTION 1

A	SECTION:1 LIGHT MULLION (25)	Ix= 10.803 in4 Sx= 3.1168 in3 IN TERMS OF ALUM.

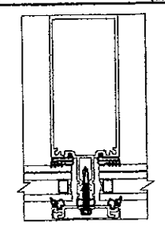

STANDARD MULLION OPTION 2

A	SECTION:2 LIGHT MULLION (25) W/ STEEL CHANNEL (47) +(48) +(49)	Ix= 38.474 in4 Sx= 9.0106 in3 IN TERMS OF ALUM.

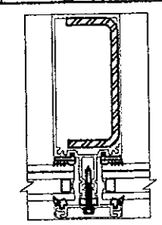

STANDARD MULLION OPTION 3

A	SECTION:3 HEAVY MULLION (28)	Ix= 14.228 in4 Sx= 4.0529 in3 IN TERMS OF ALUM.

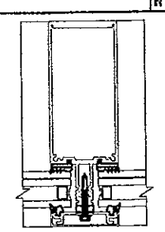

STANDARD MULLION OPTION 4

A	SECTION:4 LIGHT MULLION (25) W/ STEEL BAR (46) +(45) +(49)	Ix= 28.759 in4 Sx= 8.7634 in3 IN TERMS OF ALUM.

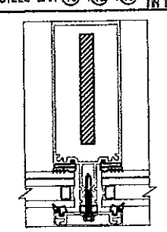

DOOR JAMB MULLION

B	SECTION:5 LIGHT MULLION (25) W/ STEEL CHANNEL (47) & 1/2"x4" STEEL BAR (46)	Ix= 37.488 in4 Sx= 9.085 in3 IN TERMS OF ALUM.

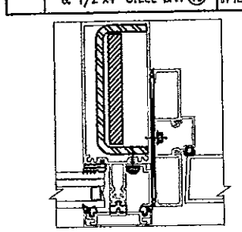

CORNER MULLION

C	SECTION:6 CORNER MULLION (20) W/ STEEL CHANNEL (47)	Ix= 27.782 in4 Sx= 8.6737 in3 IN TERMS OF ALUM.

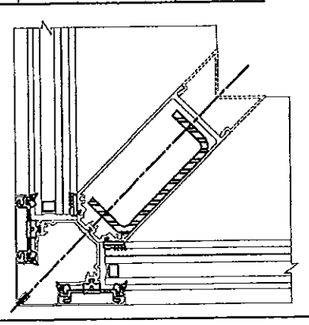

JAMB MULLION OPTION 1

D	SECTION:7 JAMB MULLION (25) W/ STEEL CHANNEL (47)	Ix= 29.217 in4 Sx= 7.2769 in3 IN TERMS OF ALUM.

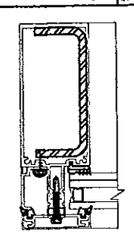

JAMB MULLION OPTION 2

D	SECTION:8 JAMB MULLION (25) + (48) + (49)	Ix= 18.762 in4 Sx= 4.1248 in3 IN TERMS OF ALUM.

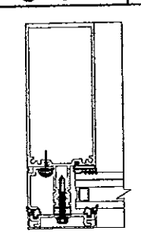

JAMB MULLION OPTION 3

D	SECTION:9 JAMB MULLION (25) W/ STEEL BAR (46)	Ix= 19.677 in4 Sx= 4.9752 in3 IN TERMS OF ALUM.

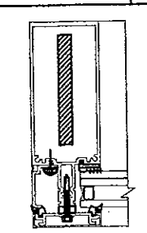

FLORIDA BUILDING CODE (High Velocity Hurricane Zone)

A.G. DRAWN BY:

10/12/12 DATE

12-154 DRAWING No

SHEET 9 OF 40

RELIANCE STORMMAX CAPTURED CURTAIN WALL SYSTEM
LARGE MISSILE IMPACT INSULATED LAMINATED GLASS (DRYGLAZED)

Oldcastle BuildingEnvelope™
803 Airport Rd - Terrell, TX 75160
www.OldcastleBE.com - Phone 800-869-4567

REV. No.	DESCRIPTION	DATE	REV. No.	DESCRIPTION	DATE
1	W/C COMMENTS	02/07/13	3		
2			4		

©2012 TILTECO, INC

TILTECO INC.
TILLIT TESTING & ENGINEERING COMPANY
6335 N.W. 36th. St., Ste. 305, VIRGINIA GARDENS, FL 33166
Phone : (305)871-1530 . Fax : (305)871-1531
e-mail: tilteco@aol.com
EB-0006719
WALTER A. TILLIT Jr. P.E.
FLORIDA Lic. # 44167

WALTER A. TILLIT JR. LICENSE No. 44167 STATE OF FLORIDA PROFESSIONAL ENGINEER

P.E. SEAL/SIGNATURE/DATE

Approved as complying with the Florida Building Code
Date 10/30/13
NOA# 13-0910.05
Miami-Dade Product Control
By

MIAMI-DADE COUNTY

MAXIMUM A.S.D. DESIGN PRESSURE RATING FOR STANDARD, DOOR JAMB, CORNER & JAMB MULLIONS FOR SINGLE SPAN

MAXIMUM MULLION SINGLE SPAN "L"(FT) SCHEDULE FOR A GIVEN A.S.D. DESIGN PRESSURE RATING (psf) AND A GIVEN MULLION EFFECTIVE SPACING "b"

MAX. A.S.D. DESING PRESSURE RATING (psf)	EFFECTIVE SPACING "b"(ft–in)	SINGLE SPAN MULLION								
		SECTION 1 STANDARD MULLION A OPTION 1 "L"(ft–in)	SECTION 2 STANDARD MULLION A OPTION 2 "L"(ft–in)	SECTION 3 STANDARD MULLION A OPTION 3 "L"(ft–in)	SECTION 4 STANDARD MULLION A OPTION 4 "L"(ft–in)	SECTION 5 DOOR JAMB MULLION B "L"(ft–in)	SECTION 6 CORNER MULLION C "L"(ft–in)	SECTION 7 JAMB MULLION D OPTION 1 "L"(ft–in)	SECTION 8 JAMB MULLION D OPTION 2 "L"(ft–in)	SECTION 9 JAMB MULLION D OPTION 3 "L"(ft–in)
60.0	3'–6"	8'–10"	12'–6"	8'–5"	12'–6"	12'–6"	12'–6"	12'–6"	12'–6"	12'–6"
	4'–0"	8'–10"	12'–6"	8'–5"	12'–6"	12'–6"	12'–6"	12'–6"	12'–6"	12'–6"
	4'–6"	8'–1"	12'–6"	8'–5"	12'–6"	12'–6"	12'–6"	12'–6"	12'–6"	12'–6"
	5'–0"	7'–3"	12'–6"	7'–10"	12'–6"	12'–6"	12'–6"	12'–6"	12'–6"	12'–6"
	5'–6"	6'–7"	12'–6"	7'–2"	12'–6"	12'–6"	12'–6"	12'–6"	12'–6"	12'–6"
	6'–0"	6'–1"	12'–6"	6'–6"	12'–6"	12'–6"	12'–6"	12'–6"	12'–6"	12'–6"
65.0	3'–6"	8'–10"	12'–6"	8'–5"	12'–6"	12'–6"	12'–6"	12'–6"	12'–6"	12'–6"
	4'–0"	8'–5"	12'–6"	8'–5"	12'–6"	12'–6"	12'–6"	12'–6"	12'–6"	12'–6"
	4'–6"	7'–5"	12'–6"	8'–0"	12'–6"	12'–6"	12'–6"	12'–6"	12'–6"	12'–6"
	5'–0"	6'–9"	12'–6"	7'–3"	12'–6"	12'–6"	12'–6"	12'–6"	12'–6"	12'–6"
	5'–6"	6'–1"	12'–6"	6'–7"	12'–6"	12'–6"	12'–6"	12'–6"	12'–6"	12'–6"
	6'–0"	5'–7"	12'–6"	6'–0"	12'–6"	12'–6"	11'–6"	12'–6"	12'–6"	12'–6"
70.0	3'–6"	—	12'–6"	8'–5"	12'–6"	12'–6"	12'–6"	12'–6"	12'–6"	12'–6"
	4'–0"	—	12'–6"	8'–5"	12'–6"	12'–6"	12'–6"	12'–6"	12'–6"	12'–6"
	4'–6"	—	12'–6"	7'–6"	12'–6"	12'–6"	12'–6"	12'–6"	12'–6"	12'–6"
	5'–0"	—	12'–6"	6'–9"	12'–6"	12'–6"	12'–6"	12'–6"	12'–6"	12'–6"
	5'–6"	—	12'–6"	6'–1"	12'–6"	12'–6"	12'–6"	12'–6"	12'–6"	12'–6"
	6'–0"	—	12'–6"	5'–7"	11'–11"	12'–6"	12'–6"	12'–6"	12'–6"	12'–6"

FLORIDA BUILDING CODE (High Velocity Hurricane Zone)

©2012 TILTECO, INC

TILTECO INC.
TILLIT TESTING & ENGINEERING COMPANY
6335 N.W. 35th. St. Ste. 305, VIRGINIA GARDENS, FL 33166
Phone : (305)871-1530 , Fax : (305)871-1531
e-mail: tilteco@aol.com
EB-0006719
WALTER A. TILLIT Jr. P.E.
FLORIDA Lic. # 44167

RELIANCE STORMMAX CAPTURED CURTAIN WALL SYSTEM
LARGE MISSILE IMPACT INSULATED LAMINATED GLASS (DRYGLAZED)

Oldcastle BuildingEnvelope™
803 Airport Rd - Terrell, TX 75160
www.OldcastleBE.com - Phone 800-869-4567

REV. No.	DESCRIPTION	DATE	REV. No.	DESCRIPTION	DATE
1	—	—	3	—	—
2	—	—	4	—	—

A.G.
DRAWN BY:

10/12/12
DATE

12–154
DRAWING No

SHEET 9A OF 40

WALTER A. TILLIT JR.
LICENSE
No. 44167
STATE OF FLORIDA
PROFESSIONAL ENGINEER

P.E. SEAL/SIGNATURE/DATE

Approved as complying with the Florida Building Code
Date 05/30/2013
NOA# 13-0508.03
Miami Dade Product Control
By

MIAMI–DADE COUNTY

RELIANCE STORMMAX TWIN SPAN MULLION W/ & W/O SPLICE

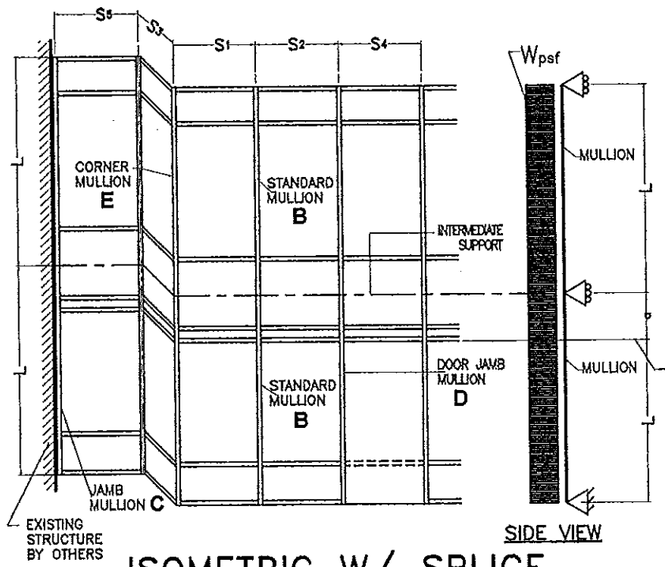

SIDE VIEW

ISOMETRIC W/ SPLICE

L = MULLION SPAN ; S1, S2, S3, S4 & S5 = MULLION SPACING

EFFECTIVE SPACING $b = \frac{S_1 + S_2}{2}$ (FOR STANDARD MULLION)

EFFECTIVE SPACING $b = \frac{S_1 + S_3}{2}$ (FOR CORNER MULLION)

EFFECTIVE SPACING $b = \frac{S_2 + S_4}{2}$ (FOR DOOR JAMB MULLION)

EFFECTIVE SPACING $b = \frac{S_5}{2}$ (FOR JAMB MULLION)

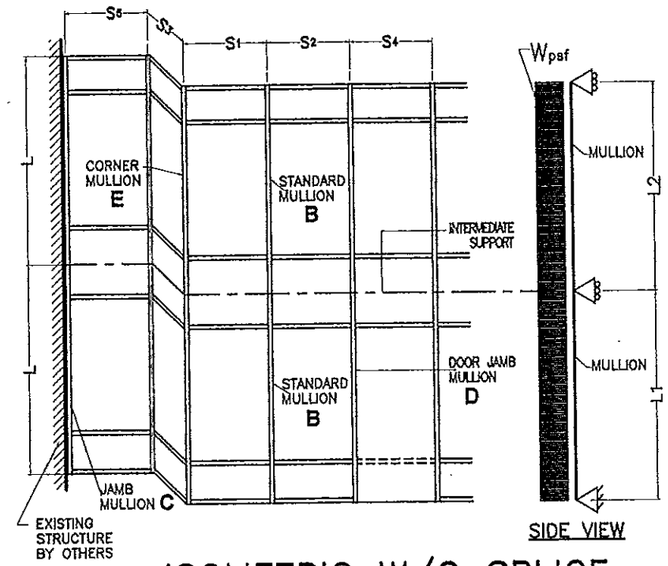

SIDE VIEW

ISOMETRIC W/O SPLICE

L1 = MULLION SPAN FIRST BAY
L2 = MULLION SPAN SECOND BAY

STANDARD MULLION OPTION 1		
B	SECTION:2 LIGHT MULLION (25) W/ STEEL CHANNEL (47)	Ix= 29.217 in4 Sx= 7.2769 in3 IN TERMS OF ALUM.

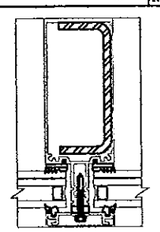

STANDARD MULLION OPTION 2		
B	SECTION:4 HEAVY MULLION (28) W/ STEEL BAR (46) +(48) +(49)	Ix= 32.156 in4 Sx= 7.5641 in3 IN TERMS OF ALUM.

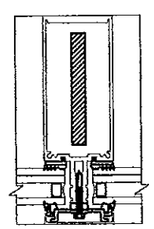

JAMB MULLION		
C	SECTION:5 JAMB MULLION (25) W/ STEEL CHANNEL (47)	Ix= 29.217 in4 Sx= 7.2769 in3 IN TERMS OF ALUM.

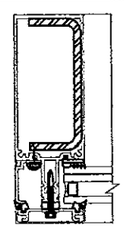

CORNER MULLION		
E	SECTION:7 CORNER MULLION (20) W/ STEEL CHANNEL (47)	Ix= 27.782 in4 Sx= 8.6737 in3 IN TERMS OF ALUM.

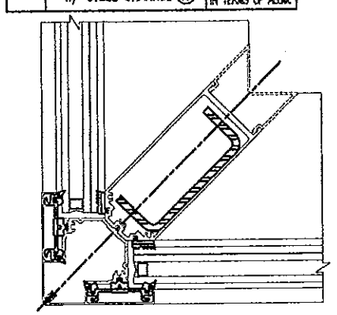

STANDARD MULLION OPTION 1		
B	SECTION:1 LIGHT MULLION (25) W/ STEEL CHANNEL (47) & 1/2"x4" STEEL BAR (46)	Ix= 37.488 in4 Sx= 9.085 in3 IN TERMS OF ALUM.

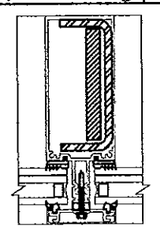

OPTION # 1
FOR STD MULLION

STANDARD MULLION OPTION 2		
B	SECTION:3 HEAVY MULLION (28) W/ STEEL BAR (46) & SLEEVE (44) +(48) +(49)	Ix= 40.8090 in4 Sx= 9.3365 in3 IN TERMS OF ALUM.

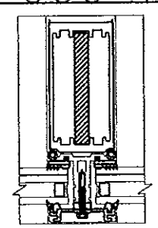

OPTION # 2
FOR STD MULLION

DOOR JAMB MULLION		
D	SECTION:6 LIGHT MULLION (25) W/ STEEL CHANNEL (47) & 1/2"x4" STEEL BAR (46)	Ix= 37.488 in4 Sx= 9.085 in3 IN TERMS OF ALUM.

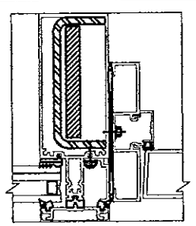

DEFINITIONS OF MULLION SECTIONS

SECTION 1 : TWIN SPAN HEAVILY REINFORCED STANDARD MULLION B OPTION 1 (SEE SHEET 11 & SECT. 7C/22)

SECTION 2 : TWIN SPAN REINFORCED STANDARD MULLION B OPTION 1 (SEE SHEET 11 & SECT. 7B/22)

SECTION 3 : TWIN SPAN REINFORCED HEAVY MULLION B OPTION 2 (SEE SHEET 11 & SECT. 7L/22)

SECTION 4 : TWIN SPAN REINFORCED HEAVY MULLION B OPTION 2 (SEE SECT. 7M/22)

SECTION 5 : TWIN SPAN REINFORCED JAMB MULLION C (SEE SECT. 7H/23)

SECTION 6 : SINGLE SPAN REINFORCED DOOR JAMB MULLION D (SEE SECT. 12/36)

SECTION 7 : SINGLE SPAN REINFORCED CORNER MULLION E (SEE SECT. 7G/24)

FLORIDA BUILDING CODE (High Velocity Hurricane Zone)

©2012 TILTECO, INC

RELIANCE STORMMAX CAPTURED CURTAIN WALL SYSTEM
LARGE MISSILE IMPACT INSULATED LAMINATED GLASS (DRYGLAZED)

Oldcastle BuildingEnvelope™
803 Airport Rd - Terrell, TX 75160
www.OldcastleBE.com - Phone 800-869-4567

REV. No.	DESCRIPTION	DATE	REV. No.	DESCRIPTION	DATE
1	-	-	3	-	-
2	-	-	4	-	-

A.G.
DRAWN BY:

10/12/12
DATE

12-154
DRAWING No

SHEET 10 OF 40

TILTECO INC.
TILLIT TESTING & ENGINEERING COMPANY
6355 N.W. 36th. St., Ste. 305, VIRGINIA GARDENS, FL 33166
Phone : (305)871-1550 , Fax : (305)871-1531
e-mail: tilteco@aol.com
EB-0006719
WALTER A. TILLIT Jr. P.E.
FLORIDA Lic. # 44167

WALTER A. TILLIT JR. LICENSE No. 44167 STATE OF FLORIDA PROFESSIONAL ENGINEER

P.E. SEAL/SIGNATURE/DATE

Approved as complying with the Florida Building Code
Date 05/30/2013
NOA# 13-0110.06
Miami-Dade Product Control
By

MIAMI-DADE COUNTY

MAXIMUM A.S.D. DESIGN PRESSURE RATING FOR STANDARD, JAMB, DOOR JAMB & CORNER MULLIONS FOR TWIN SPAN W/ SPLICED MULLIONS
MAXIMUM MULLION TWIN SPAN "L"(FT) SCHEDULE FOR A GIVEN A.S.D. DESIGN PRESSURE RATING (psf) AND A GIVEN MULLION EFFECTIVE SPACING "b"

MAX. A.S.D. DESING PRESSURE RATING	EFFECTIVE SPACING	TWIN SPAN MULLION W/ SPLICE				
		SECTIONS 1&2 STANDARD MULLION B OPTION 1	SECTIONS 3&4 STANDARD MULLION B OPTION 2	SECTION 5 JAMB MULLION C	SECTION 6 DOOR JAMB MULLION D	SECTION 7 CORNER MULLION E
(psf)	"b"(ft-in)	"L"(ft-in)	"L"(ft-in)	"L"(ft-in)	"L"(ft-in)	"L"(ft-in)
60.0	3'-6"	12'-6"	12'-6"	12'-6"	12'-6"	12'-6"
	4'-0"	12'-6"	12'-6"	12'-6"	12'-6"	12'-6"
	4'-6"	12'-6"	12'-6"	12'-6"	12'-6"	12'-6"
	5'-0"	12'-6"	12'-6"	12'-6"	12'-6"	12'-6"
	5'-6"	12'-6"	12'-6"	12'-6"	12'-6"	12'-6"
	6'-0"	12'-6"	12'-6"	12'-6"	12'-6"	12'-6"
65.0	3'-6"	12'-6"	12'-6"	12'-6"	12'-6"	12'-6"
	4'-0"	12'-6"	12'-6"	12'-6"	12'-6"	12'-6"
	4'-6"	12'-6"	12'-6"	12'-6"	12'-6"	12'-6"
	5'-0"	12'-6"	12'-6"	12'-6"	12'-6"	12'-6"
	5'-6"	12'-6"	12'-6"	12'-6"	12'-6"	12'-6"
	6'-0"	12'-6"	12'-6"	12'-6"	12'-6"	12'-6"
70.0	3'-6"	12'-6"	12'-6"	12'-6"	12'-6"	12'-6"
	4'-0"	12'-6"	12'-6"	12'-6"	12'-6"	12'-6"
	4'-6"	12'-6"	12'-6"	12'-6"	12'-6"	12'-6"
	5'-0"	12'-6"	12'-6"	12'-6"	12'-6"	12'-6"
	5'-6"	12'-6"	12'-6"	12'-6"	12'-6"	12'-6"
	6'-0"	12'-6"	12'-6"	12'-6"	12'-6"	12'-6"

MAXIMUM A.S.D. DESIGN PRESSURE RATING FOR STANDARD, JAMB, DOOR JAMB & CORNER MULLIONS FOR TWIN SPAN W/ CONTINUOUS (NON SPLICED) MULLIONS
MAXIMUM MULLION TWIN SPAN "L1"(FT) & L2 (FT) SCHEDULE FOR A GIVEN A.S.D. DESIGN PRESSURE RATING (psf) AND A GIVEN MULLION EFFECTIVE SPACING "b"

MAX. A.S.D. DESING PRESSURE RATING	EFFECTIVE SPACING	TWIN SPAN MULLION CONTINUOUS (W/O SPLICE)								
		SECTIONS 1 & 2 STANDARD MULLION B OPTION 1		SECTIONS 3 & 4 STANDARD MULLION B OPTION 2		SECTION 5 JAMB MULLION C		SECTION 6 DOOR JAMB MULLION D	SECTION 7 CORNER MULLION E	
(psf)	"b"(ft-in)	"L1"(ft-in)	"L2"(ft-in)	"L1"(ft-in)	"L2"(ft-in)	"L1"(ft-in)	"L2"(ft-in)	"L1"(ft-in)	"L1"(ft-in)	"L2"(ft-in)
60.0	3'-6"	14'-7"	12'-6"	14'-7"	12'-6"	14'-7"	12'-6"	12'-6"	14'-7"	12'-6"
	4'-0"	14'-7"	12'-6"	14'-7"	12'-6"	14'-7"	12'-6"	12'-6"	14'-7"	12'-6"
	4'-6"	14'-7"	12'-6"	14'-7"	12'-6"	14'-7"	12'-6"	12'-6"	14'-7"	12'-6"
	5'-0"	14'-7"	12'-6"	14'-7"	12'-6"	14'-7"	12'-6"	12'-6"	14'-7"	12'-6"
	5'-6"	14'-7"	12'-6"	14'-7"	12'-6"	14'-7"	12'-6"	12'-6"	14'-7"	12'-6"
	6'-0"	14'-7"	12'-6"	14'-7"	12'-6"	14'-7"	12'-6"	12'-6"	14'-7"	12'-6"
65.0	3'-6"	14'-7"	12'-6"	14'-7"	12'-6"	14'-7"	12'-6"	12'-6"	14'-7"	12'-6"
	4'-0"	14'-7"	12'-6"	14'-7"	12'-6"	14'-7"	12'-6"	12'-6"	14'-7"	12'-6"
	4'-6"	14'-7"	12'-6"	14'-7"	12'-6"	14'-7"	12'-6"	12'-6"	14'-7"	12'-6"
	5'-0"	14'-7"	12'-6"	14'-7"	12'-6"	14'-7"	12'-6"	12'-6"	14'-7"	12'-6"
	5'-6"	14'-7"	12'-6"	14'-7"	12'-6"	14'-7"	12'-6"	12'-6"	14'-7"	12'-6"
	6'-0"	14'-7"	12'-6"	14'-7"	12'-6"	14'-7"	12'-6"	12'-6"	14'-7"	12'-6"
70.0	3'-6"	14'-7"	12'-6"	14'-7"	12'-6"	14'-7"	12'-6"	12'-6"	14'-7"	12'-6"
	4'-0"	14'-7"	12'-6"	14'-7"	12'-6"	14'-7"	12'-6"	12'-6"	14'-7"	12'-6"
	4'-6"	14'-7"	12'-6"	14'-7"	12'-6"	14'-7"	12'-6"	12'-6"	14'-7"	12'-6"
	5'-0"	14'-7"	12'-6"	14'-7"	12'-6"	14'-7"	12'-6"	12'-6"	14'-7"	12'-6"
	5'-6"	14'-7"	12'-6"	14'-7"	12'-6"	14'-7"	12'-6"	12'-6"	14'-7"	12'-6"
	6'-0"	13'-8"	12'-6"	13'-8"	12'-6"	13'-8"	12'-6"	12'-6"	13'-8"	12'-6"

FLORIDA BUILDING CODE (High Velocity Hurricane Zone)

A.G. DRAWN BY:
10/12/12 DATE
12-154 DRAWING No.
SHEET 10A OF 40

RELIANCE STORMMAX CAPTURED CURTAIN WALL SYSTEM
LARGE MISSILE IMPACT INSULATED LAMINATED GLASS (DRYGLAZED)

Oldcastle BuildingEnvelope™
803 Airport Rd - Terrell, TX 75160
www.OldcastleBE.com - Phone 800-869-4567

REV. No.	DESCRIPTION	DATE	REV. No.	DESCRIPTION	DATE
1	-	-	3	-	-
2	-	-	4	-	-

©2012 TILTECO, INC

TILTECO INC.
TILLIT TESTING & ENGINEERING COMPANY
6335 N.W. 36th. St., Ste. 305, VIRGINIA GARDENS, FL 33166
Phone : (305)871-1530 , Fax : (305)871-1531
e-mail: tilteco@aol.com
EB-0006719
WALTER A. TILLIT Jr. P.E.
FLORIDA Lic. # 44167

WALTER A. TILLIT JR. LICENSE No. 44167 STATE OF FLORIDA PROFESSIONAL ENGINEER

P.E. SEAL/SIGNATURE/DATE

Approved as complying with the Florida Building Code
Date 05/30/2013
NOA# 13-0110.03
Miami-Dade Product Control
By

MIAMI-DADE COUNTY

OPTIONS FOR JAMB, CORNER AND STANDARD MULLIONS INSTALLATION TWIN SPAN CURTAIN WALL SYSTEM W/ SPLICED MULLIONS

N.T.S.

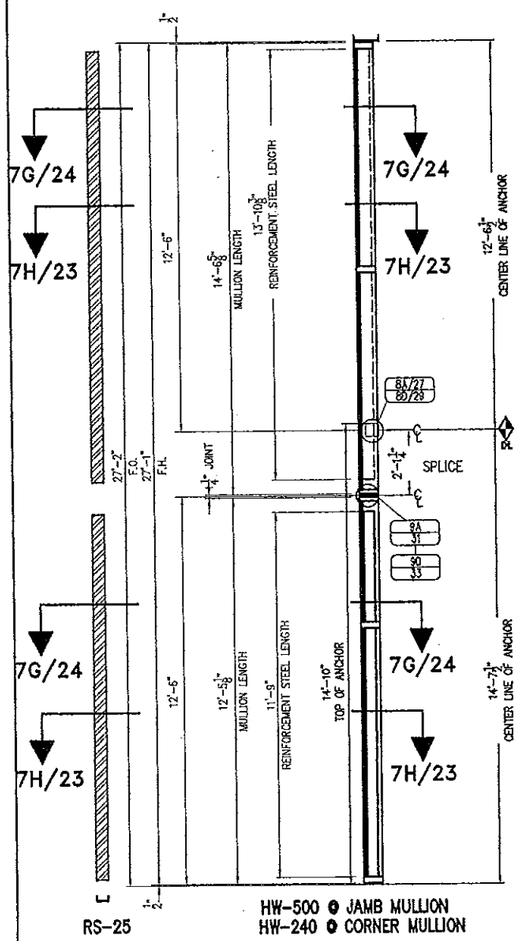

SIDEVIEW FOR JAMB MULLION "C" & CORNER MULLION "E" (SEE SHEET 10)

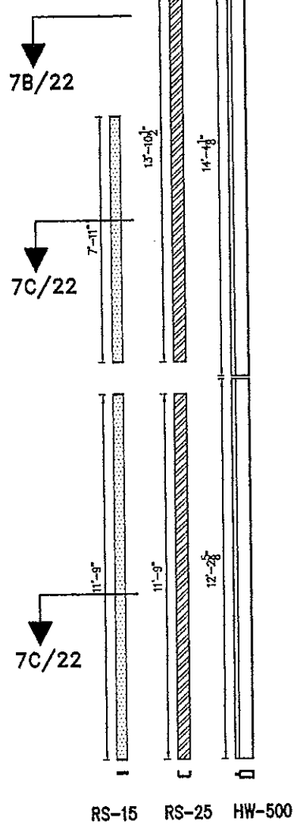

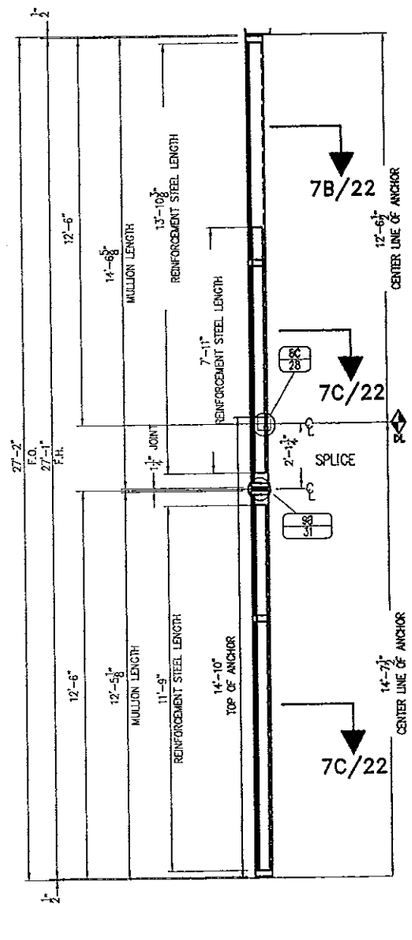

SIDEVIEW FOR OPTION # 1 FOR STANDARD MULLION "B" (SEE SHEET 10)

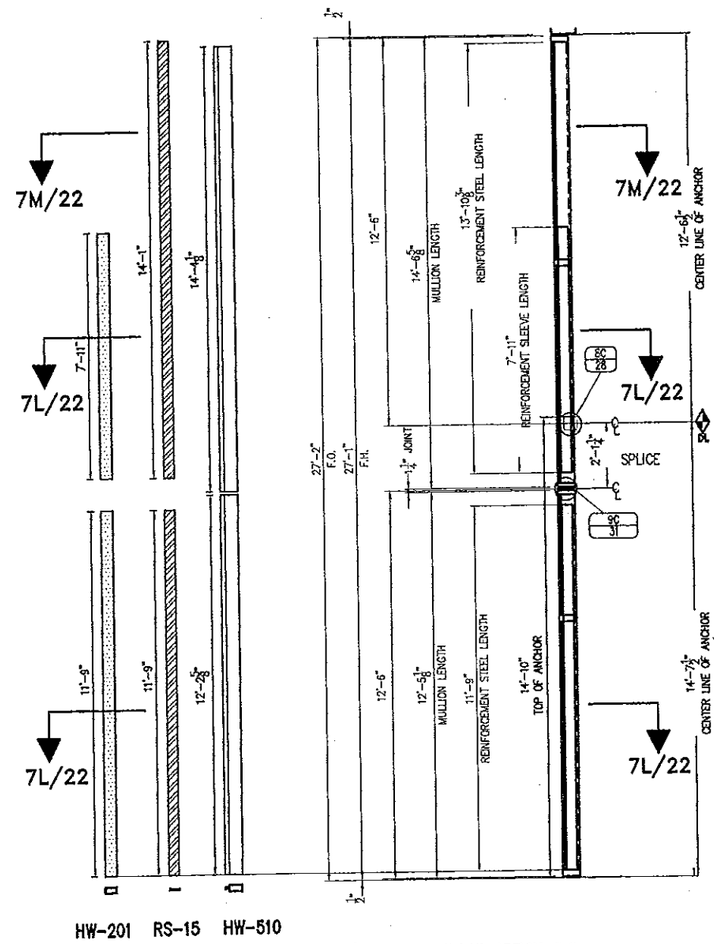

SIDEVIEW FOR OPTION # 2 FOR STANDARD MULLION "B" (SEE SHEET 10)

FLORIDA BUILDING CODE (High Velocity Hurricane Zone)

©2012 TILTECO, INC

TILTECO INC.
TILLIT TESTING & ENGINEERING COMPANY
6355 N.W. 36th. St. Ste. 305, VIRGINIA GARDENS, FL 33166
Phone : (305)871-1530, Fax : (305)871-1531
e-mail: tilteco@aol.com
EB-0006719
WALTER A. TILLIT Jr. P.E.
FLORIDA Lic. # 44167

RELIANCE STORMMAX CAPTURED CURTAIN WALL SYSTEM
LARGE MISSILE IMPACT INSULATED LAMINATED GLASS (DRYGLAZED)

Oldcastle BuildingEnvelope™
803 Airport Rd - Terrell, TX 75160
www.OldcastleBE.com - Phone 800-869-4567

REV. No.	DESCRIPTION	DATE	REV. No.	DESCRIPTION	DATE
1	-	-	3	-	-
2	-	-	4	-	-

A.G.
DRAWN BY:

10/12/12
DATE

12-154
DRAWING No

SHEET 11 OF 40

WALTER A. TILLIT JR. LICENSE NO. 44167 STATE OF FLORIDA PROFESSIONAL ENGINEER

P.E. SEAL/SIGNATURE/DATE

Approved as complying with the Florida Building Code
Date 05/30/13
NOA# 13-0116.05
Miami-Dade Product Control
By

MIAMI-DADE COUNTY

OPTIONS FOR JAMB, CORNER AND STANDARD MULLIONS INSTALLATION TWIN SPAN CURTAIN WALL SYSTEM W/ CONTINUOUS (NON SPLICED) MULLIONS

N.T.S.

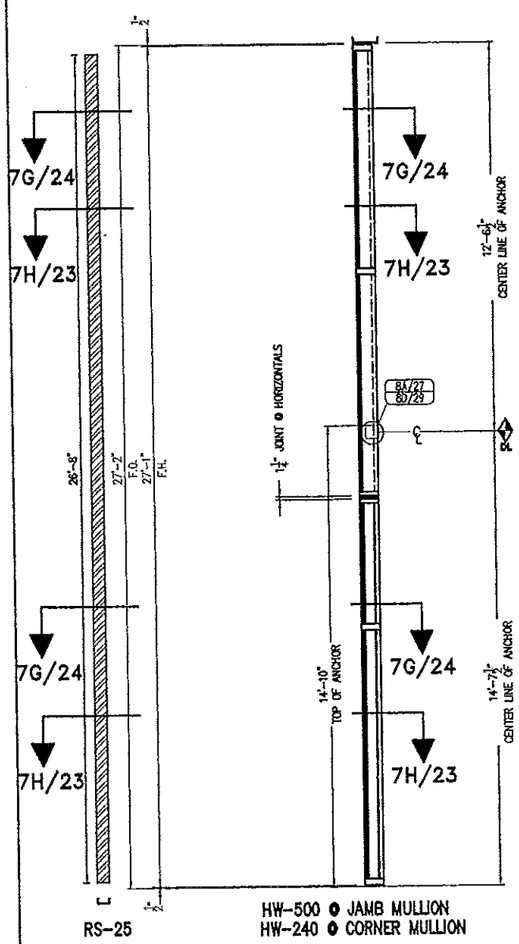

SIDEVIEW FOR JAMB MULLION "C" & CORNER MULLION "E" (SEE SHEET 10)

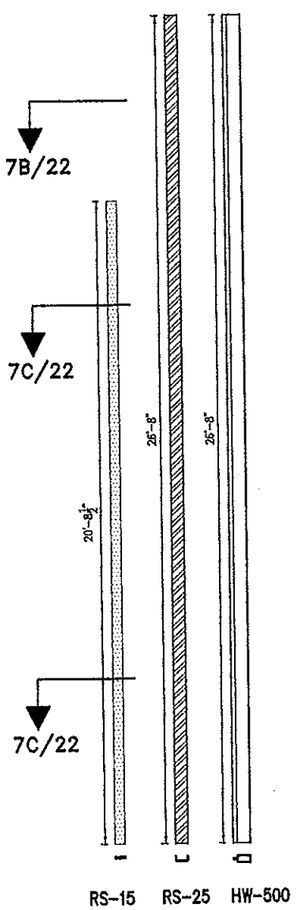

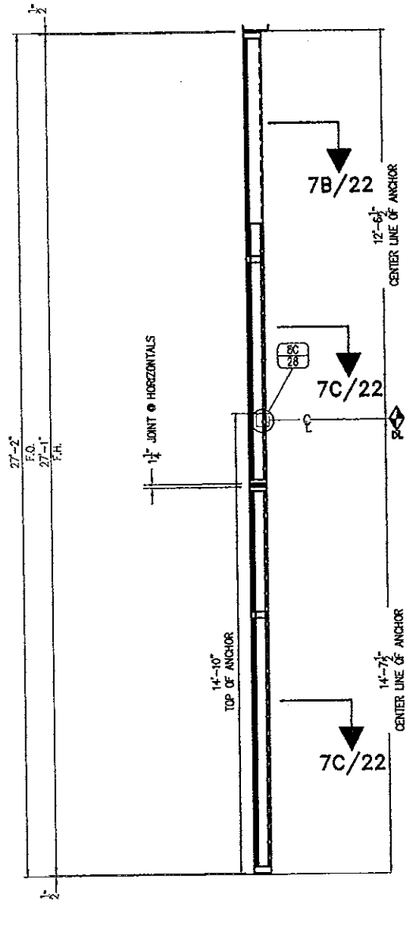

SIDEVIEW FOR OPTION # 1 FOR STANDARD MULLION "B" (SEE SHEET 10)

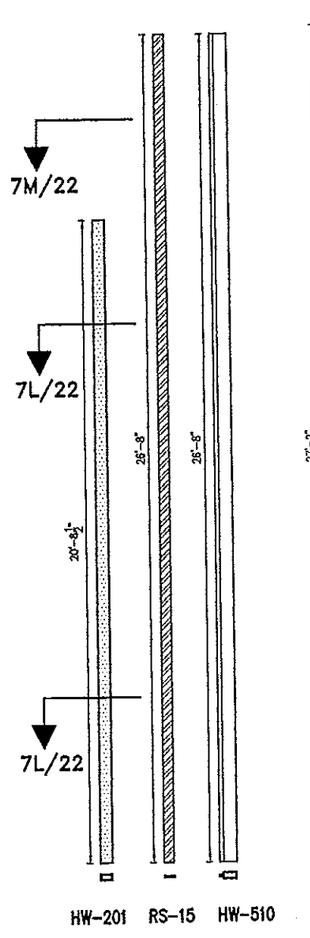

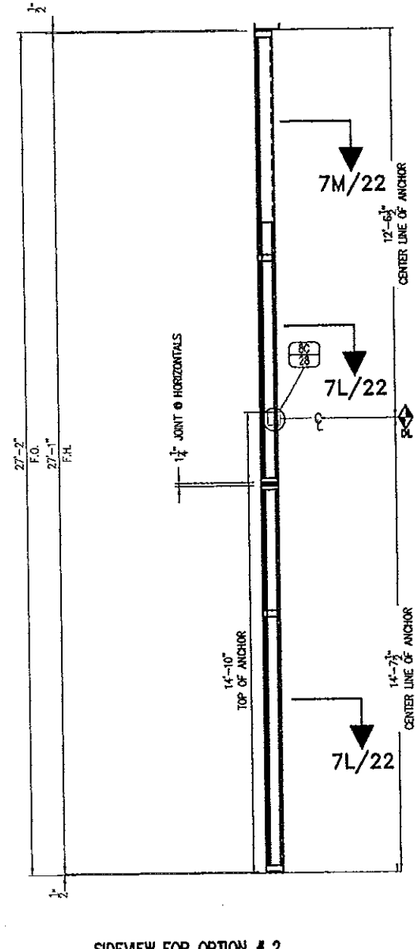

SIDEVIEW FOR OPTION # 2 FOR STANDARD MULLION "B" (SEE SHEET 10)

FLORIDA BUILDING CODE (High Velocity Hurricane Zone)

RELIANCE STORMMAX CAPTURED CURTAIN WALL SYSTEM
LARGE MISSILE IMPACT INSULATED LAMINATED GLASS (DRYGLAZED)

Oldcastle BuildingEnvelope™
803 Airport Rd - Terrell, TX 75160
www.OldcastleBE.com - Phone 800-369-4567

REV. No	DESCRIPTION	DATE	REV. No	DESCRIPTION	DATE
1	-	-	3	-	-
2	-	-	4	-	-

A.G.
DRAWN BY:

10/12/12
DATE

12-154
DRAWING No

SHEET 11A OF 40

©2012 TILTECO, INC

TILTECO INC.
TILLIT TESTING & ENGINEERING COMPANY
8355 N.W. 38th St. Ste. 305, VIRGINIA GARDENS, FL 33166
Phone : (305)871-1530 , Fax : (305)871-1531
e-mail: tilteco@aol.com
EB-0006719
WALTER A. TILLIT Jr. P.E.
FLORIDA Lic. # 44167

WALTER A. TILLIT JR. LICENSE No. 44167 STATE OF FLORIDA PROFESSIONAL ENGINEER

P.E. SEAL/SIGNATURE/DATE

Approved as complying with the Florida Building Code
Date 05/30/2013
NOA# 13-0110.05
Miami-Dade Product Control
By

MIAMI-DADE COUNTY

MAXIMUM A.S.D. DESIGN PRESSURE RATING FOR SINGLE & TWIN SPAN HEAD & SILL STANDARD OR CORNER MULLION CONNECTIONS

HEAD & SILL CONNECTION		FASTENERS A,B,C & D			
		MAXIMUM A.S.D. DESIGN PRESSURE RATING (psf)			
MAXIMUM MULLION SPAN	EFFECTIVE SPACING	POURED CONCRETE (Min. f'c = 3ksi) SUBSTRATE			1/4" Min. THK ASTM A-36 STEEL SUBSTRATE
		FASTENERS TYPES			FASTENERS
"L" (ft-in)	"b" (ft-in)	A	B	C	D
8 '- 5 "	3 '- 6 "	70.0	70.0	70.0	70.0
	4 '- 0 "	70.0	70.0	70.0	70.0
	4 '- 6 "	70.0	70.0	70.0	70.0
	5 '- 0 "	70.0	70.0	70.0	70.0
	5 '- 6 "	70.0	70.0	70.0	70.0
	6 '- 0 "	70.0	70.0	70.0	70.0
8 '- 6 "	3 '- 6 "	70.0	70.0	70.0	70.0
	4 '- 0 "	70.0	70.0	70.0	70.0
	4 '- 6 "	70.0	70.0	70.0	70.0
	5 '- 0 "	70.0	70.0	70.0	70.0
	5 '- 6 "	70.0	70.0	70.0	70.0
	6 '- 0 "	70.0	70.0	70.0	70.0
9 '- 0 "	3 '- 6 "	70.0	70.0	70.0	70.0
	4 '- 0 "	70.0	70.0	70.0	70.0
	4 '- 6 "	70.0	70.0	70.0	70.0
	5 '- 0 "	70.0	70.0	70.0	70.0
	5 '- 6 "	70.0	70.0	70.0	70.0
	6 '- 0 "	70.0	70.0	70.0	70.0
9 '- 6 "	3 '- 6 "	70.0	70.0	70.0	70.0
	4 '- 0 "	70.0	70.0	70.0	70.0
	4 '- 6 "	70.0	70.0	70.0	70.0
	5 '- 0 "	70.0	70.0	70.0	70.0
	5 '- 6 "	70.0	70.0	70.0	70.0
	6 '- 0 "	70.0	70.0	70.0	70.0
10 '- 0 "	3 '- 6 "	70.0	70.0	70.0	70.0
	4 '- 0 "	70.0	70.0	70.0	70.0
	4 '- 6 "	70.0	70.0	70.0	70.0
	5 '- 0 "	70.0	70.0	70.0	70.0
	5 '- 6 "	70.0	70.0	70.0	70.0
	6 '- 0 "	70.0	70.0	70.0	70.0
10 '- 6 "	3 '- 6 "	70.0	70.0	70.0	70.0
	4 '- 0 "	70.0	70.0	70.0	70.0
	4 '- 6 "	70.0	70.0	70.0	70.0
	5 '- 0 "	70.0	70.0	70.0	70.0
	5 '- 6 "	70.0	70.0	70.0	70.0
	6 '- 0 "	70.0	70.0	70.0	70.0
11 '- 0 "	3 '- 6 "	70.0	70.0	70.0	70.0
	4 '- 0 "	70.0	70.0	70.0	70.0
	4 '- 6 "	70.0	70.0	70.0	70.0
	5 '- 0 "	70.0	70.0	70.0	70.0
	5 '- 6 "	70.0	70.0	70.0	70.0
	6 '- 0 "	70.0	70.0	70.0	70.0
11 '- 6 "	3 '- 6 "	70.0	70.0	70.0	70.0
	4 '- 0 "	70.0	70.0	70.0	70.0
	4 '- 6 "	70.0	70.0	70.0	70.0
	5 '- 0 "	70.0	70.0	70.0	70.0
	5 '- 6 "	70.0	70.0	70.0	70.0
	6 '- 0 "	70.0	70.0	70.0	70.0
12 '- 0 "	3 '- 6 "	70.0	70.0	70.0	70.0
	4 '- 0 "	70.0	70.0	70.0	70.0
	4 '- 6 "	70.0	70.0	70.0	70.0
	5 '- 0 "	70.0	70.0	70.0	70.0
	5 '- 6 "	70.0	70.0	70.0	70.0
	6 '- 0 "	70.0	70.0	70.0	70.0
12 '- 6 "	3 '- 6 "	70.0	70.0	70.0	70.0
	4 '- 0 "	70.0	70.0	70.0	70.0
	4 '- 6 "	70.0	70.0	70.0	70.0
	5 '- 0 "	70.0	70.0	70.0	70.0
	5 '- 6 "	70.0	70.0	70.0	70.0
	6 '- 0 "	70.0.	70.0	70.0	70.0

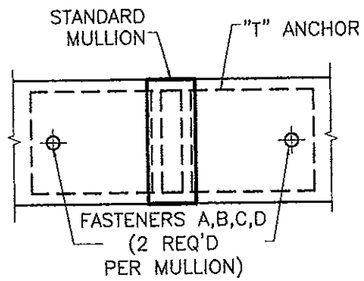

SCHEMATIC "T" ANCHOR CONNECTION DETAIL FOR FASTENERS A, B, C & D *

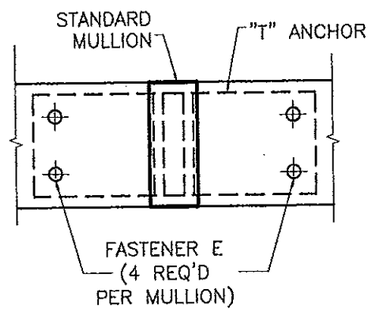

SCHEMATIC "T" ANCHOR CONNECTION DETAIL FOR FASTENER E*

* SEE CONNECTION DETAILS ON SHEETS 19 & 26 FOR FASTENERS QUANTITY & LOCATIONS AT MULLION.

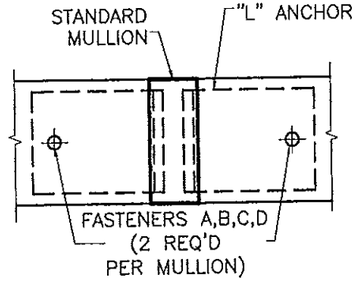

SCHEMATIC "L" ANCHOR CONNECTION DETAIL FOR FASTENERS A, B, C & D *

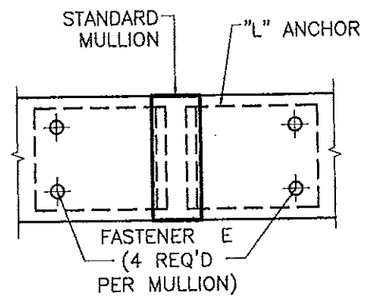

SCHEMATIC "L" ANCHOR CONNECTION DETAIL FOR FASTENER E*

* SEE CONNECTION DETAILS ON SHEETS 19 & 26 FOR FASTENERS QUANTITY & LOCATIONS AT MULLION.

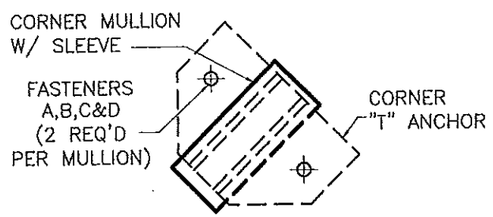

SCHEMATIC "T" ANCHOR/SLEEVE CONNECTION DETAIL FOR FASTENERS A,B,C & D *

* SEE CONNECTION DETAILS ON SHEETS 21 & 26 FOR FASTENERS QUANTITY & LOCATIONS AT MULLION.

B FASTENERS TYPES REQUIREMENTS

A - 1/2"Ø HILTI KWIK BOLT TZ ANCHOR W/ 3 1/4" Min. EMBEDMENT INTO 8" Min. THICK POURED CONCRETE (Min. f'c = 3 ksi) BEYOND ANY FINISH MATERIAL, W/ 6" MIN. EDGE DISTANCE.

B - 1/2"Ø HILTI KWIK BOLT TZ ANCHOR W/ 3 1/4" Min. EMBEDMENT INTO 6" Min. THICK POURED CONCRETE (Min. f'c = 3 ksi) BEYOND ANY FINISH MATERIAL, W/ 7 1/2" MIN. EDGE DISTANCE.

C - 1/2"Ø HILTI KWIK HUS-H SCREW ANCHOR W/ 3" Min. EMBEDMENT INTO 4" Min. THICK POURED CONCRETE (Min. f'c = 3 ksi) BEYOND ANY FINISH MATERIAL, W/ 3 3/4" MIN. EDGE DISTANCE.

D - 1/2"Ø-13 TYPE "F" GRADE 5 BOLT TO 1/4" MIN. THK. ASTM A-36 STEEL W/ 1" Min. EDGE DISTANCE OR 1/2"Ø -13 SAE GALVANIZED STEEL GRADE 5 HHB THRU BOLT W/ NUT & LOCK WASHER TO 1/4" Min. THK. ASTM A-36 STEEL W/ 1" MIN. EDGE DISTANCE.

E - 3/8" Ø LAG SCREW W/ 3" MIN. EMBEDMENT INTO G=0.55" MIN. SPECIFITY GRAVITY WOOD SUBSTRATE W/ 1 1/2" MIN. EDGE DISTANCE.

SINGLE & TWIN SPAN HEAD & SILL CONNECTION		
MAX. MULLION SPAN	EFFECTIVE SPACING	MAX. A.S.D. DESIGN PRESSURE RATING
		WOOD SUBSTRATE
"L"(ft-in)	"b"(ft-in)	FASTENER E
6'-0"	4'-0"	70.0
	4'-6"	70.0
	5'-0"	64.7
6'-6"	4'-0"	70.0
	4'-6"	66.4
	5'-0"	59.7
7'-0"	4'-0"	69.3
	4'-6"	61.6
	5'-0"	55.5
7'-6"	4'-0"	64.7
	4'-6"	57.5
	5'-0"	51.8
8'-0"	4'-0"	60.7
	4'-6"	53.9
	5'-0"	48.5
8'-6"	4'-0"	57.1
	4'-6"	50.7
	5'-0"	45.7
9'-0"	4'-0"	53.9
	4'-6"	47.9
	5'-0"	43.1

FLORIDA BUILDING CODE (High Velocity Hurricane Zone)

RELIANCE STORMMAX CAPTURED CURTAIN WALL SYSTEM
LARGE MISSILE IMPACT INSULATED LAMINATED GLASS (DRYGLAZED)

Oldcastle BuildingEnvelope™
803 Airport Rd - Terrell, TX 75160
www.OldcastleBE.com - Phone 800-869-4567

SCH. No	DESCRIPTION	DATE	SCH. No	DESCRIPTION	DATE
1	-	-	3	-	-
2	-	-	4	-	-

A.G. DRAWN BY: | 10/12/12 DATE | 12-154 DRAWING No | SHEET 12 OF 40

©2012 TILTECO, INC

TILTECO INC.
TILLIT TESTING & ENGINEERING COMPANY
6355 N.W. 36th. St. Ste. 303, VIRGINIA GARDENS, FL 33166
Phone : (305)871-1530 . Fax : (305)871-1531
e-mail: tilteco@aol.com
EB-0006719
WALTER A. TILLIT Jr. P.E.
FLORIDA Lic. # 44167

WALTER A. TILLIT JR. LICENSE No. 44167 STATE OF FLORIDA PROFESSIONAL ENGINEER

P.E. SEAL/SIGNATURE/DATE

Approved as complying with the Florida Building Code
Date 05/30/2013
NOA# 13-0516.05
Miami-Dade Product Control
By

MIAMI-DADE COUNTY

MAXIMUM A.S.D. DESIGN PRESSURE RATING FOR SINGLE & TWIN SPAN HEAD & SILL JAMB OR DOOR JAMB MULLION CONNECTIONS

SINGLE AND TWIN SPAN HEAD & SILL CONNECTION			
MAX. MULLION SPAN	EFFECTIVE SPACING	MAX. A.S.D. DESIGN PRESSURE RATING	
		1/4" MIN. THK ASTM A-36 STEEL SUBSTRATE	POURED CONCRETE MIN. (fc=3ksi) SUBSTRATE
		FASTENER	FASTENER
"L"(ft-in)	"b"(ft-in)	D	G
12'-6" OR LESS	3'-6"	70.0	70.0
	4'-0"	70.0	70.0
	4'-6"	70.0	70.0
	5'-0"	70.0	70.0
	5'-6"	70.0	70.0
	6'-0"	70.0	70.0

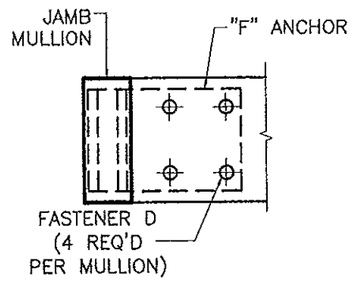

SCHEMATIC "F" ANCHOR CONNECTION DETAIL FOR FASTENERS D*

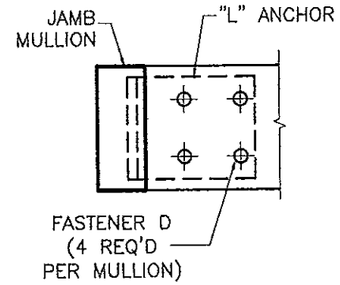

SCHEMATIC "L" ANCHOR CONNECTION DETAIL FOR FASTENERS D*

SINGLE & TWIN SPAN HEAD & SILL CONNECTION		
MAX. MULLION SPAN	EFFECTIVE SPACING	MAX. A.S.D. DESIGN PRESSURE RATING
		POURED CONCRETE MIN. (fc=3ksi) SUBSTRATE
"L"(ft-in)	"b"(ft-in)	FASTENER F
12'-6" OR LESS	3'-6"	70.0
	4'-0"	70.0
	4'-6"	70.0
	5'-0"	70.0
	5'-6"	70.0
	6'-0"	70.0

SINGLE & TWIN SPAN HEAD & SILL CONNECTION		
MAX. MULLION SPAN	EFFECTIVE SPACING	MAX. A.S.D. DESIGN PRESSURE RATING
		WOOD SUBSTRATE
"L"(ft-in)	"b"(ft-in)	FASTENER E
6'-0"	4'-0"	70.0
	4'-6"	70.0
	5'-0"	64.7
6'-6"	4'-0"	70.0
	4'-6"	66.4
	5'-0"	59.7
7'-0"	4'-0"	69.3
	4'-6"	61.6
	5'-0"	55.5
7'-6"	4'-0"	64.7
	4'-6"	57.5
	5'-0"	51.8
8'-0"	4'-0"	60.7
	4'-6"	53.9
	5'-0"	48.5
8'-6"	4'-0"	57.1
	4'-6"	50.7
	5'-0"	45.7
9'-0"	4'-0"	53.9
	4'-6"	47.9
	5'-0"	43.1

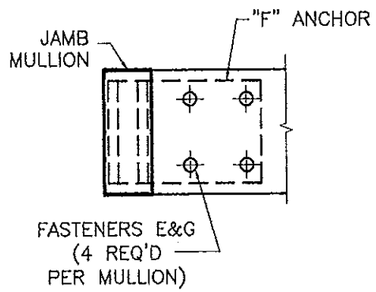

SCHEMATIC "F" ANCHOR CONNECTION DETAIL FOR FASTENERS E & G *

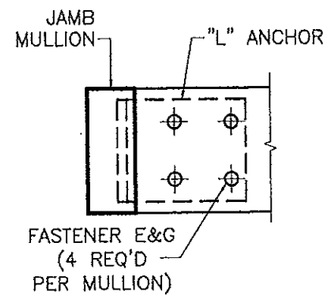

SCHEMATIC "L" ANCHOR CONNECTION DETAIL FOR FASTENERS E & G *

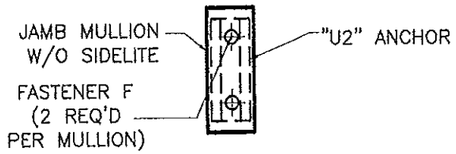

SCHEMATIC "U2" ANCHOR CONNECTION DETAIL FOR FASTENER F*

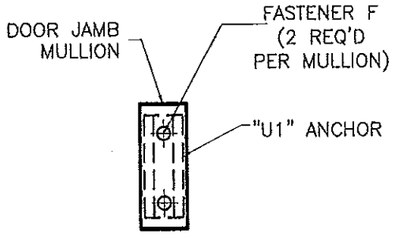

SCHEMATIC "U1" ANCHOR CONNECTION DETAIL FOR FASTENER F*

* SEE CONNECTION DETAILS ON SHEETS 20 & 26 FOR FASTENERS QUANTITY & LOCATIONS AT MULLION.

* SEE CONNECTION DETAILS ON SHEETS 26, 37 & 38 FOR FASTENERS QUANTITY & LOCATIONS AT MULLION.

(B) FASTENERS TYPES REQUIREMENTS

D - 1/2"Ø-13 TYPE "F" GRADE 5 BOLT TO 1/4" MIN. THK. ASTM A-36 STEEL W/ 1" Min. EDGE DISTANCE OR 1/2"Ø -13 SAE GALVANIZED STEEL GRADE 5 HHB THRU BOLT W/ NUT & LOCK WASHER TO 1/4" Min. THK. ASTM A-36 STEEL W/ 1" MIN. EDGE DISTANCE.

E - 3/8" Ø LAG SCREW W/ 3" MIN. EMBEDMENT INTO G=0.55" MIN. SPECIFITY GRAVITY WOOD SUBSTRATE W/ 1 1/2" MIN. EDGE DISTANCE.

F - 1/2" Ø POWER FASTENERS WEDGE BOLT, W/ 3 1/2" MIN. EMBEDMENT INTO 6" MIN. THICK POURED CONCRETE (f'c=3 ksi) BEYOND ANY FINISH MATERIAL W/ 6" MIN. EDGE DISTANCE.

G - 3/8" Ø POWER FASTENERS WEDGE BOLT, W/ 3 1/2" MIN. EMBEDMENT INTO 6" MIN. THICK POURED CONCRETE (f'c=3 ksi) BEYOND ANY FINISH MATERIAL W/ 4 1/2" MIN. EDGE DISTANCE.

FLORIDA BUILDING CODE (High Velocity Hurricane Zone)

RELIANCE STORMMAX CAPTURED CURTAIN WALL SYSTEM
LARGE MISSILE IMPACT INSULATED LAMINATED GLASS (DRYGLAZED)

A.G. DRAWN BY: | 10/12/12 DATE | 12-154 DRAWING No. | SHEET 13 OF 40

Oldcastle BuildingEnvelope™
803 Airport Rd. - Terrell, TX 75160
www.OldcastleBE.com - Phone 800-869-4567

REV. No.	DESCRIPTION	DATE	REV. No.	DESCRIPTION	DATE
1	-	-	3	-	-
2	-	-	4	-	-

©2012 TILTECO, INC

TILTECO INC.
TILLIT TESTING & ENGINEERING COMPANY
6355 N.W. 36th. St., Ste. 305, VIRGINIA GARDENS, FL 33166
Phone : (305)871-1530 . Fax : (305)871-1531
e-mail: tilteco@aol.com
EB-0006719
WALTER A. TILLIT Jr. P.E.
FLORIDA Lic. # 44167

WALTER A. TILLIT JR. LICENSE No. 44167 STATE OF FLORIDA PROFESSIONAL ENGINEER

P.E. SEAL/SIGNATURE/DATE

Approved as complying with the Florida Building Code
Date 03/06/2013
NOA# 13-0118.05
Miami-Dade Product Control
By

MIAMI-DADE COUNTY

HEAD CONNECTION DETAILS (SIDE VIEWS)

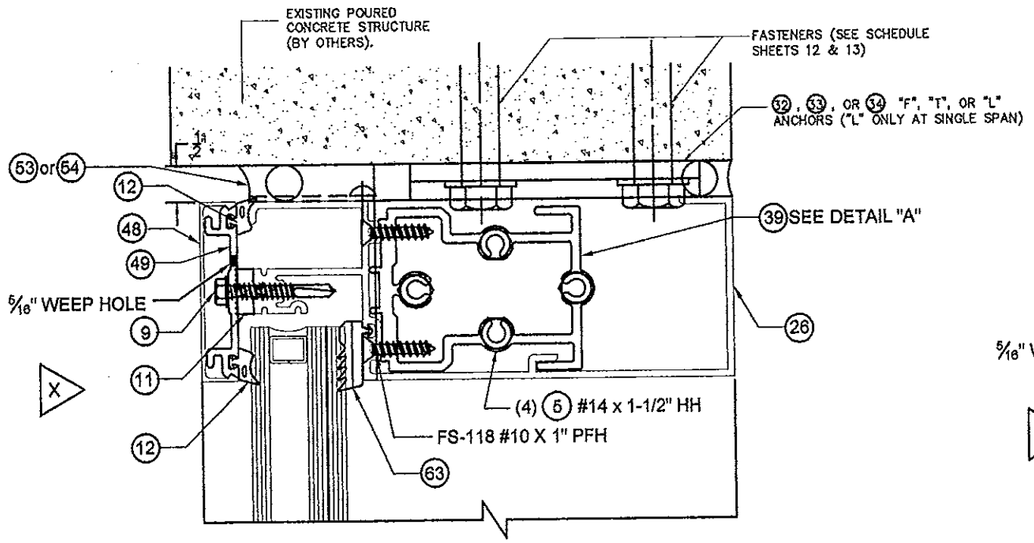

1A
HEAD(CONC)

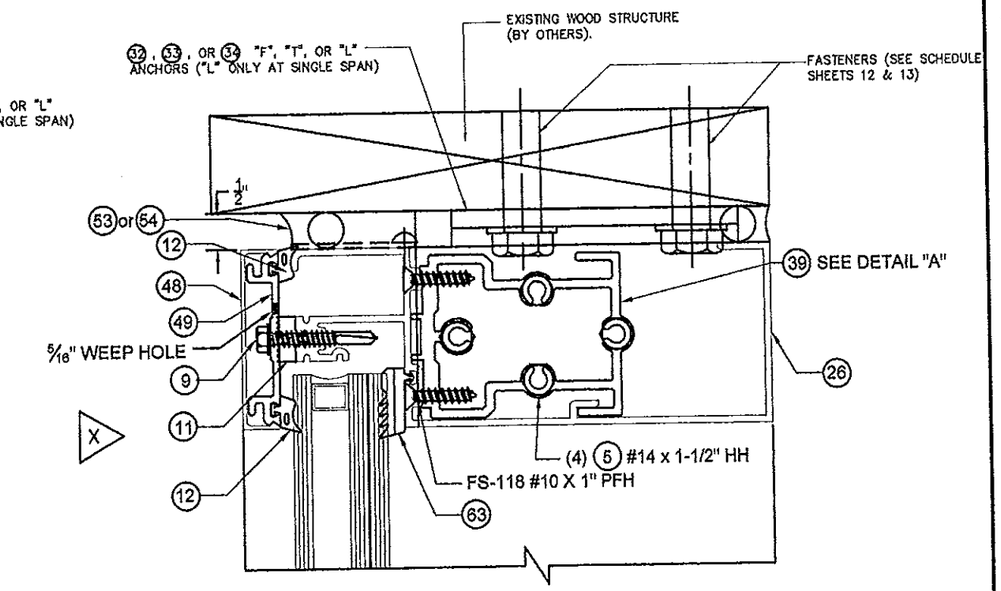

1C
HEAD(WOOD)

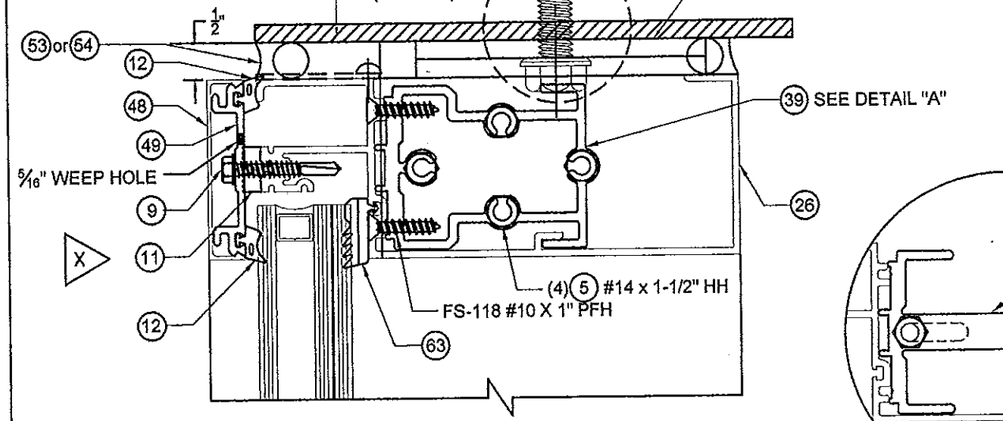

1B
HEAD(STEEL)

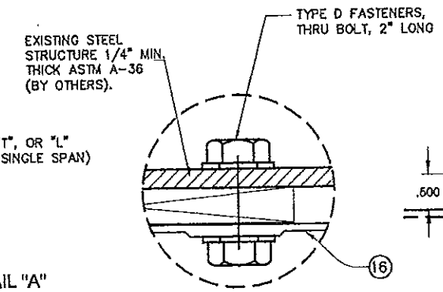

ALTERNATE FASTENER
DETAIL 1

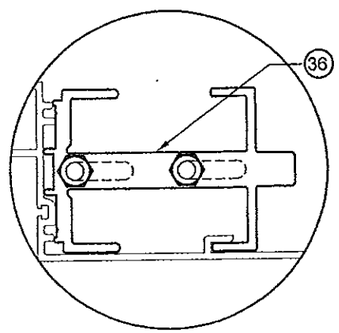

DETAIL "A"

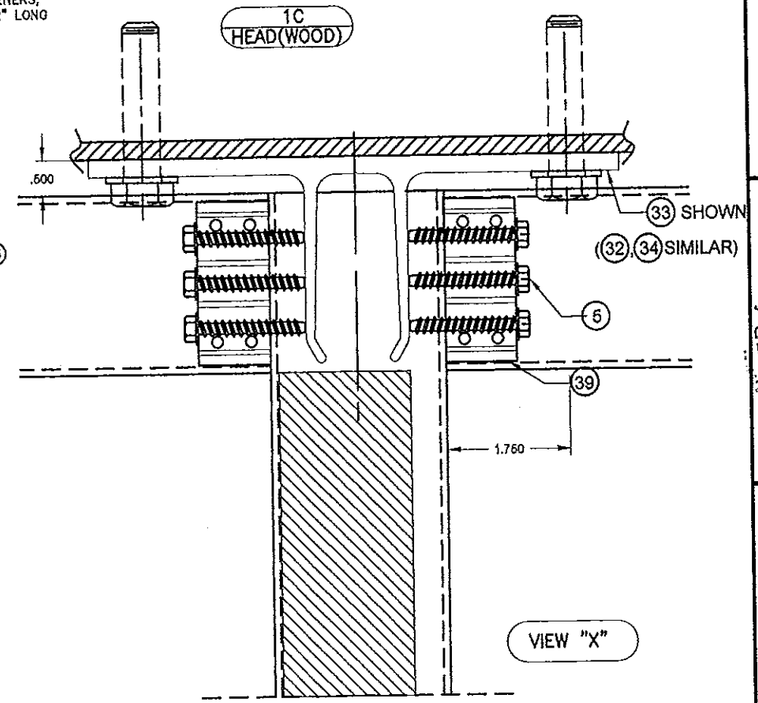

VIEW "X"

FLORIDA BUILDING CODE (High Velocity Hurricane Zone)

RELIANCE STORMMAX CAPTURED CURTAIN WALL SYSTEM
LARGE MISSILE IMPACT INSULATED LAMINATED GLASS (DRYGLAZED)

Oldcastle BuildingEnvelope™
803 Airport Rd - Terrell, TX 75160
www.OldcastleBE.com - Phone 800-869-4567

REV. No	DATE	DESCRIPTION	REV. No	DATE	DESCRIPTION
1	-	-	3	-	-
2	-	-	4	-	-

A.G.
DRAWN BY:

10/12/12
DATE

12-154
DRAWING No

SHEET 14 OF 40

©2012 TILTECO, INC

TILTECO INC.
TILLIT TESTING & ENGINEERING COMPANY
6355 N.W. 36th. St., Ste. 305, VIRGINIA GARDENS, FL 33166
Phone : (305)871-1530 , Fax : (305)871-1531
e-mail: tilteco@aol.com
EB-0006719
WALTER A. TILLIT Jr. P.E.
FLORIDA Lic. # 44167

WALTER A. TILLIT JR. LICENSE No. 44167 STATE OF FLORIDA PROFESSIONAL ENGINEER

P.E. SEAL/SIGNATURE/DATE

Approved as complying with the Florida Building Code
Date 05/30/2013
NOA# 13-0110.06
Miami-Dade Product Control
By

MIAMI-DADE COUNTY

HORIZONTAL (NON EXPANSION) CONNECTION DETAILS FOR INSULATED LAMINATED GLASS DRYGLAZED (SIDE VIEWS)

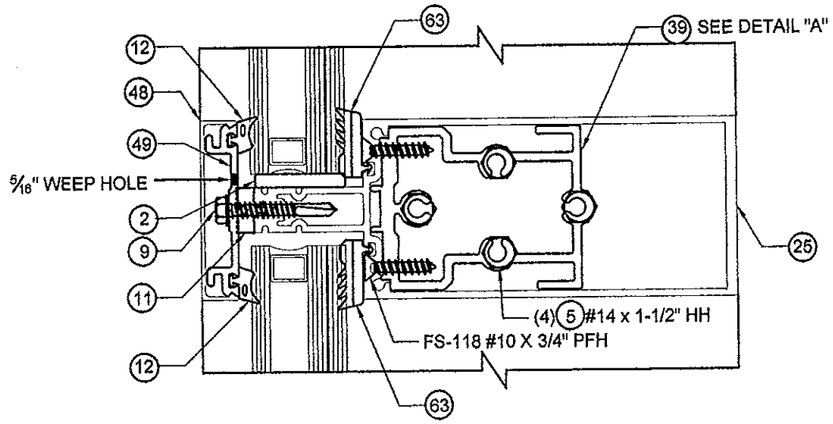

2A
HORIZONTAL

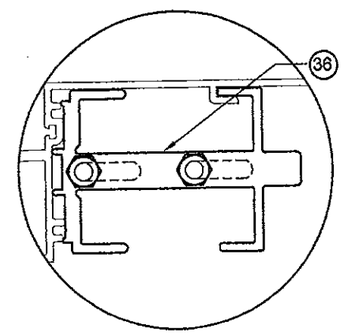

DETAIL "A"

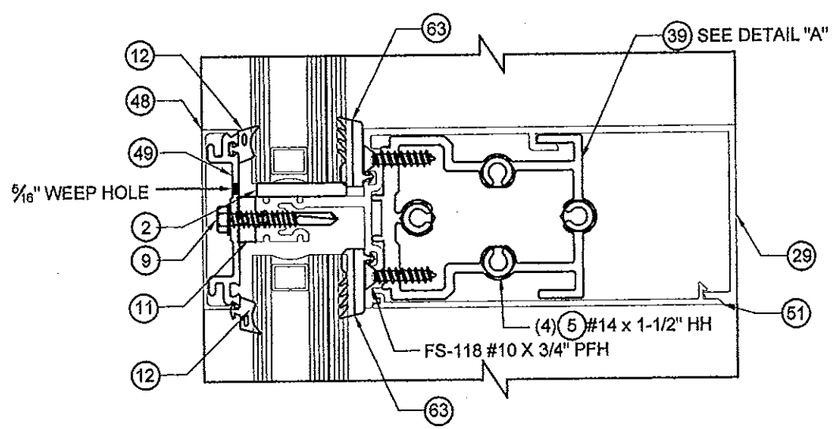

2B
HORIZONTAL

FLORIDA BUILDING CODE (High Velocity Hurricane Zone)

©2012 TILTECO, INC

TILTECO INC.
TILLIT TESTING & ENGINEERING COMPANY
6355 N.W. 36th St., Ste. 305, VIRGINIA GARDENS, FL 33166
Phone : (305)871-1530 . Fax : (305)871-1531
e-mail: tilteco@aol.com
EB-0006719
WALTER A. TILLIT Jr. P.E.
FLORIDA Lic. # 44167

RELIANCE STORMMAX CAPTURED CURTAIN WALL SYSTEM
LARGE MISSILE IMPACT INSULATED LAMINATED GLASS (DRYGLAZED)

Oldcastle BuildingEnvelope™
803 Airport Rd - Terrell, TX 75160
www.OldcastleBE.com - Phone 800-869-4567

REV. No	DESCRIPTION	DATE	REV. No	DESCRIPTION	DATE
1	-	-	3	-	-
2	-	-	4	-	-

A.G.
DRAWN BY:

10/12/12
DATE

12-154
DRAWING No

SHEET 15 OF 40

WALTER A. TILLIT JR.
LICENSE
No. 44167
STATE OF FLORIDA
PROFESSIONAL ENGINEER

P.E. SEAL/SIGNATURE/DATE

Approved as complying with the Florida Building Code
Date 09/16/2013
Notice of Product Control

MIAMI-DADE COUNTY

HORIZONTAL (NON EXPANSION) CONNECTION DETAIL FOR INSULATED LAMINATED GLASS DRYGLAZED (SIDE VIEW)

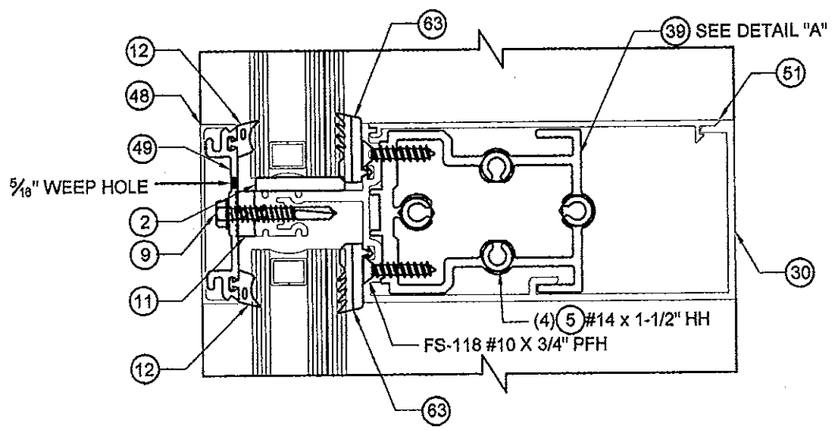

2C
HORIZONTAL

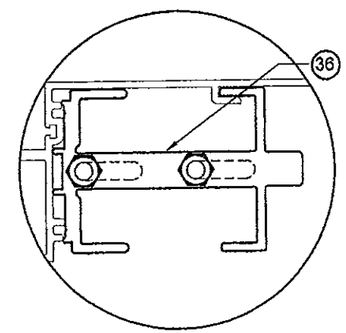

DETAIL "A"

FLORIDA BUILDING CODE (High Velocity Hurricane Zone)

©2012 TILTECO, INC

TILTECO INC.
TILLIT TESTING & ENGINEERING COMPANY
6355 N.W. 36th. St., Ste. 305, VIRGINIA GARDENS, FL 33166
Phone : (305)871-1530 , Fax : (305)871-1531
e-mail: tilteco@aol.com
EB-0006719
WALTER A. TILLIT Jr., P.E.
FLORIDA Lic. # 44167

A.G.
DRAWN BY:

10/12/12
DATE

12-154
DRAWING No

SHEET 16 OF 40

RELIANCE STORMMAX CAPTURED CURTAIN WALL SYSTEM
LARGE MISSILE IMPACT INSULATED LAMINATED GLASS (DRYGLAZED)

Oldcastle BuildingEnvelope™
803 Airport Rd - Terrell, TX 75160
www.OldcastleBE.com - Phone 800-869-4567

REV. No	DESCRIPTION	DATE	REV. No	DESCRIPTION	DATE
1	-	-	3	-	-
2	-	-	4	-	-

WALTER A. TILLIT JR. LICENSE NO. 44167 STATE OF FLORIDA PROFESSIONAL ENGINEER

P.E. SEAL/SIGNATURE/DATE

Approved as complying with the Florida Building Code
Date 05-30-2013
NOA# 13-0318.08
Miami-Dade Product Control
By

MIAMI-DADE COUNTY

EXPANSION HORIZONTAL CONNECTION DETAILS FOR INSULATED LAMINATED GLASS DRYGLAZED (SIDE VIEWS)

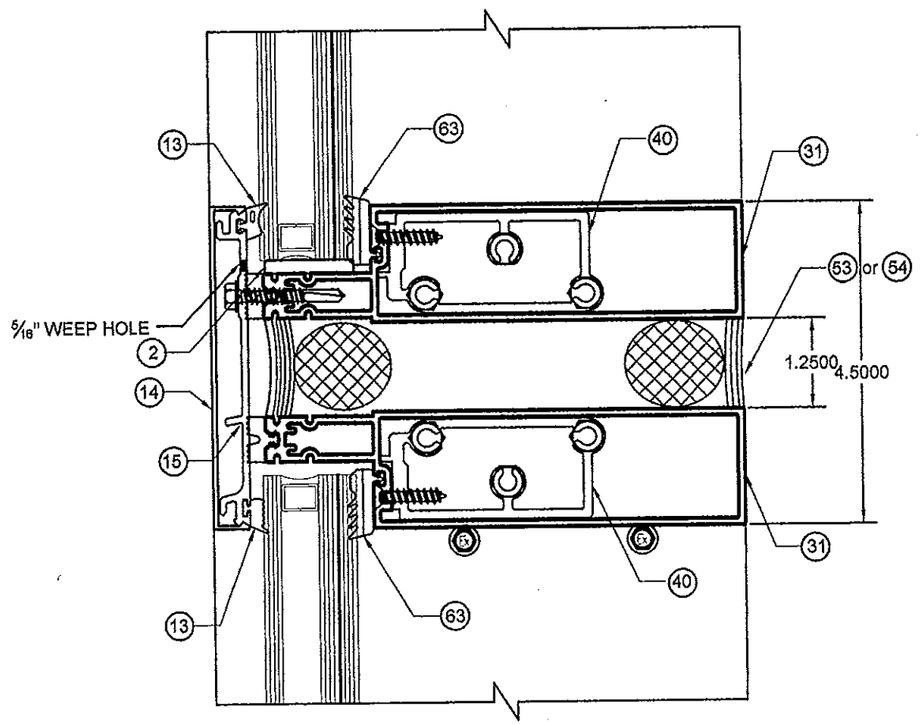

2E
HORIZONTAL AT STD OR JAMB MULLION

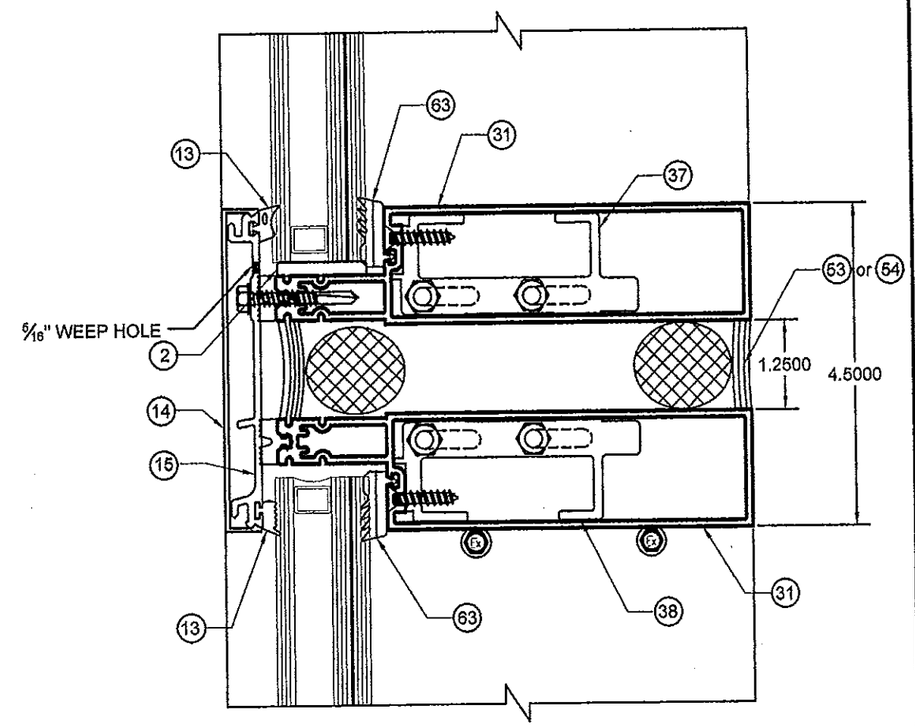

2F
HORIZONTAL AT CORNER MULLION

FLORIDA BUILDING CODE (High Velocity Hurricane Zone)

RELIANCE STORMMAX CAPTURED CURTAIN WALL SYSTEM
LARGE MISSILE IMPACT INSULATED LAMINATED GLASS (DRYGLAZED)

Oldcastle BuildingEnvelope™
803 Airport Rd - Terrell, TX 75160
www.OldcastleBE.com - Phone 800-869-4567

REV. No	DESCRIPTION	DATE	REV. No	DESCRIPTION	DATE
1	-	-	3	-	-
2	-	-	4	-	-

A.G.
DRAWN BY:

10/12/12
DATE

12-154
DRAWING No

SHEET 17 OF 40

©2012 TILTECO, INC

TILTECO INC.
TILLIT TESTING & ENGINEERING COMPANY
6355 N.W. 36th. St. Ste. 305, VIRGINIA GARDENS, FL. 33166
Phone : (305)871-1530 Fax : (305)871-1531
e-mail: tilteco@aol.com
EB-0006719
WALTER A. TILLIT Jr. P.E.
FLORIDA Lic. # 44167

WALTER A. TILLIT JR. LICENSE No 44167 STATE OF FLORIDA PROFESSIONAL ENGINEER

P.E. SEAL/SIGNATURE/DATE

Approved as complying with the Florida Building Code
Date 05/30/2013
NOA# 13-0110.05
Miami-Dade Product Control
By

MIAMI-DADE COUNTY

SILL CONNECTION DETAILS (SIDE VIEWS)

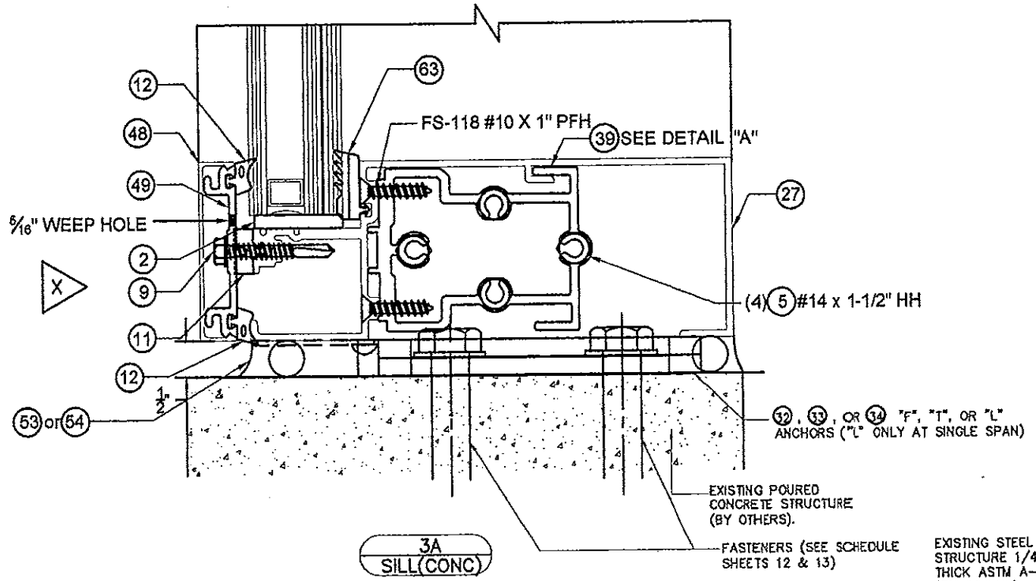

3A
SILL(CONC)

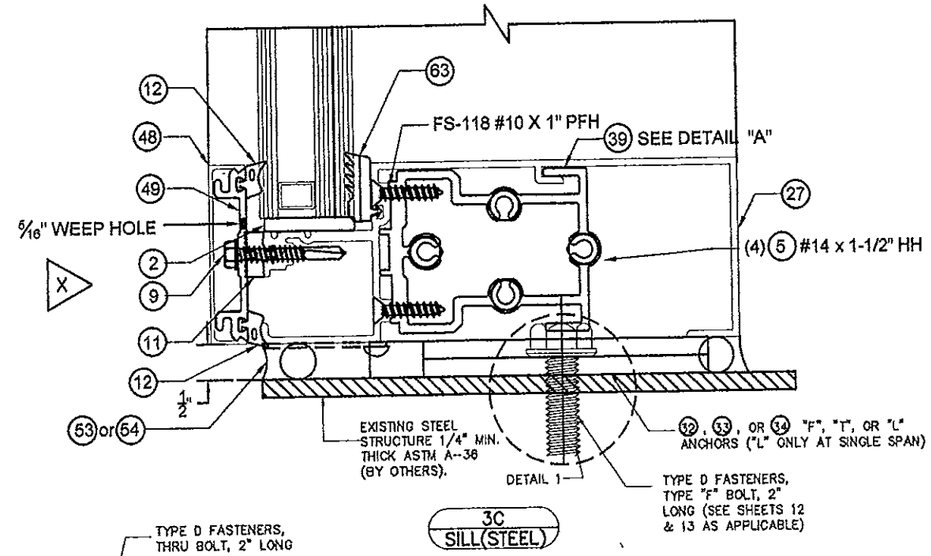

3C
SILL(STEEL)

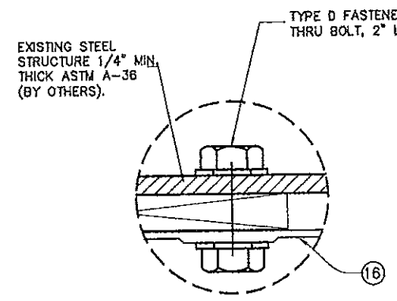

ALTERNATE FASTENER
DETAIL 1

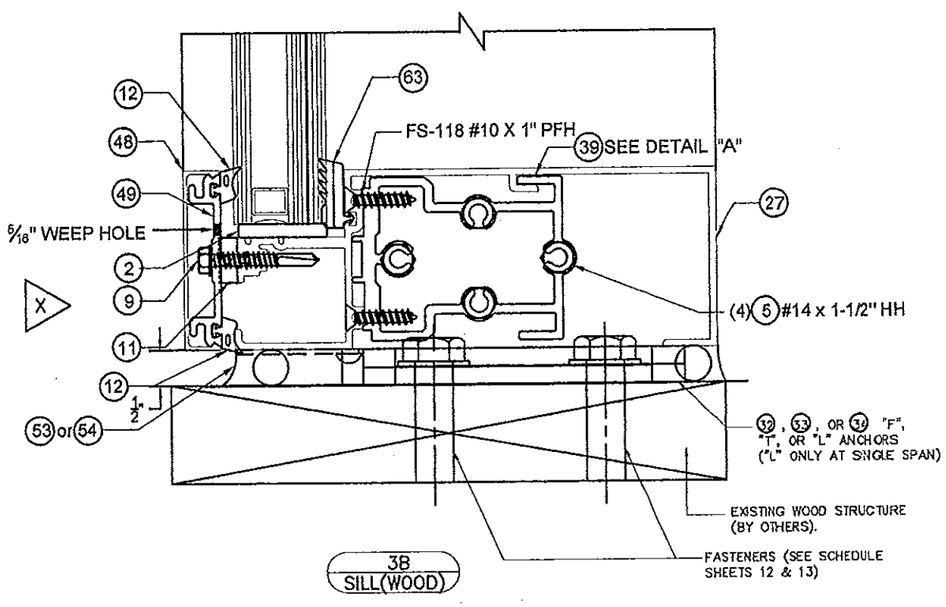

3B
SILL(WOOD)

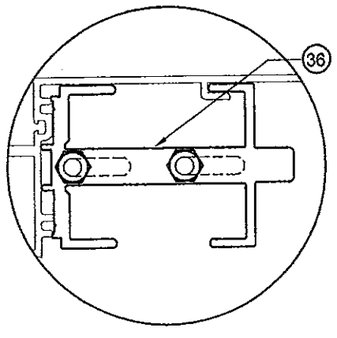

DETAIL "A"

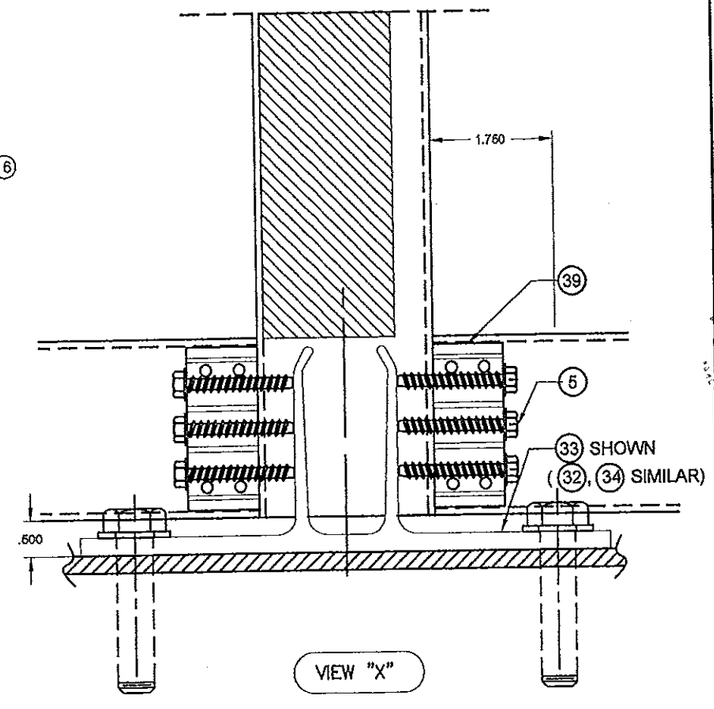

VIEW "X"

FLORIDA BUILDING CODE (High Velocity Hurricane Zone)

A.G.
DRAWN BY:

10/12/12
DATE

12-154
DRAWING No

SHEET 18 OF 40

RELIANCE STORMMAX CAPTURED CURTAIN WALL SYSTEM
LARGE MISSILE IMPACT INSULATED LAMINATED GLASS (DRYGLAZED)

Oldcastle BuildingEnvelope™
803 Airport Rd - Terrell, TX 75160
www.OldcastleBE.com - Phone 800-869-4567

REV. No	DESCRIPTION	DATE	REV. No	DESCRIPTION	DATE
1	-	-	3	-	-
2	-	-	4	-	-

©2012 TILTECO, INC

TILTECO INC.
TILLIT TESTING & ENGINEERING COMPANY
6355 N.W. 36th. St. Ste. 305, VIRGINIA GARDENS, FL 33166
Phone : (305)871-1535 Fax: (305)871-1531
e-mail: tilteco@aol.com
EB-0006719
WALTER A. TILLIT Jr. P.E.
FLORIDA Lic. # 44167

WALTER A. TILLIT JR. LICENSE No. 44167 STATE OF FLORIDA PROFESSIONAL ENGINEER

P.E. SEAL/SIGNATURE/DATE

Approved as complying with the Florida Building Code
Date 03-13-2013
NOA# 11-0818.03
Miami-Dade Product Control
By

MIAMI-DADE COUNTY

SILL & HEAD CONNECTION DETAILS FOR STANDARD MULLION AT SINGLE & TWIN SPAN (PLAN)

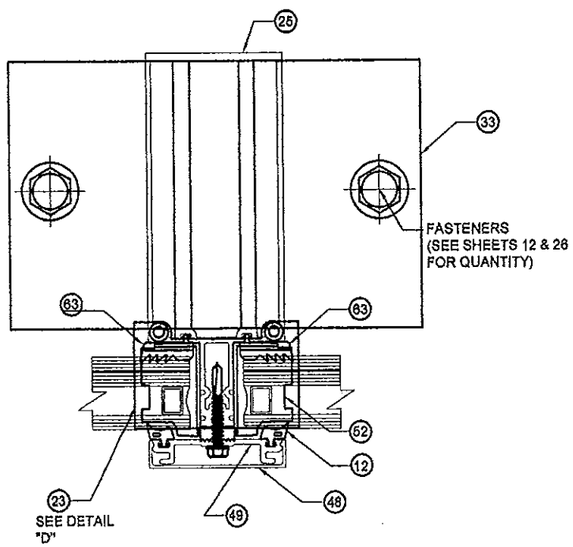

4A
STD MULLION

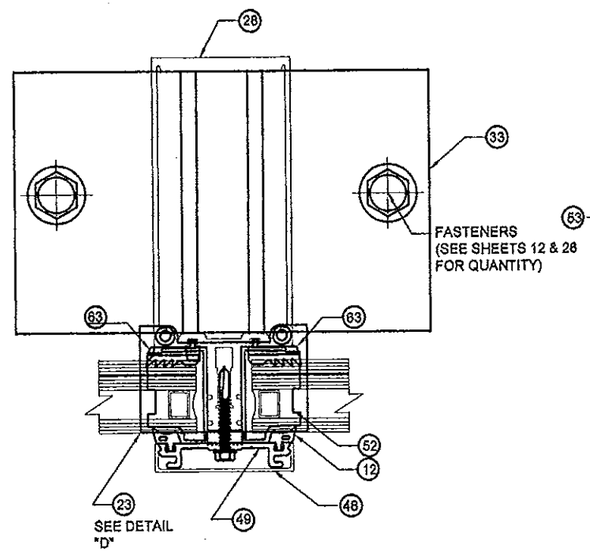

4B
STD MULLION

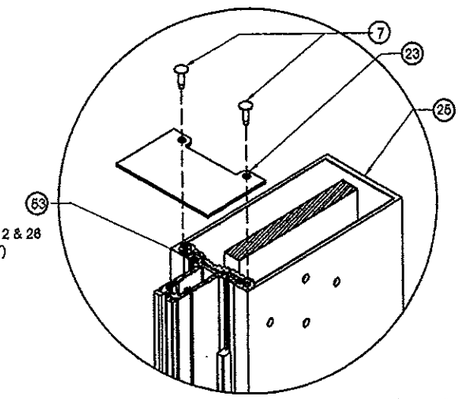

DETAIL "D"

NOTE: TO ASSURE PROPER PERIMETER SEAL AT HEAD AND SILL INSTALL HW-325 MULLION END CAP

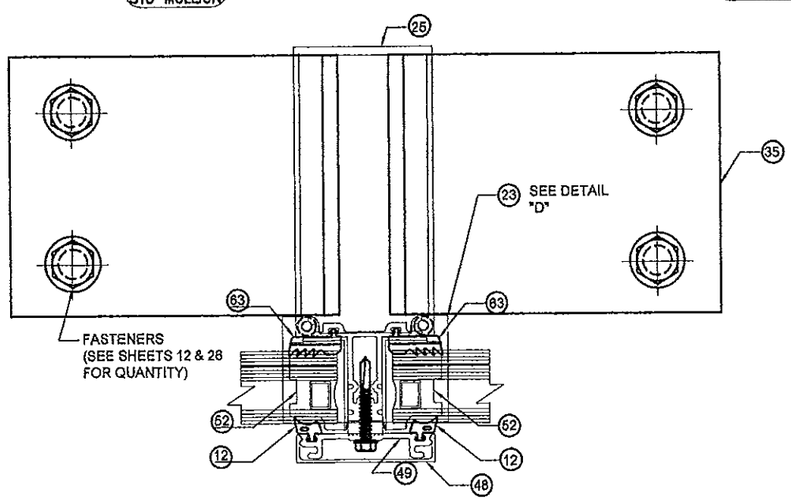

4C
STD MULLION

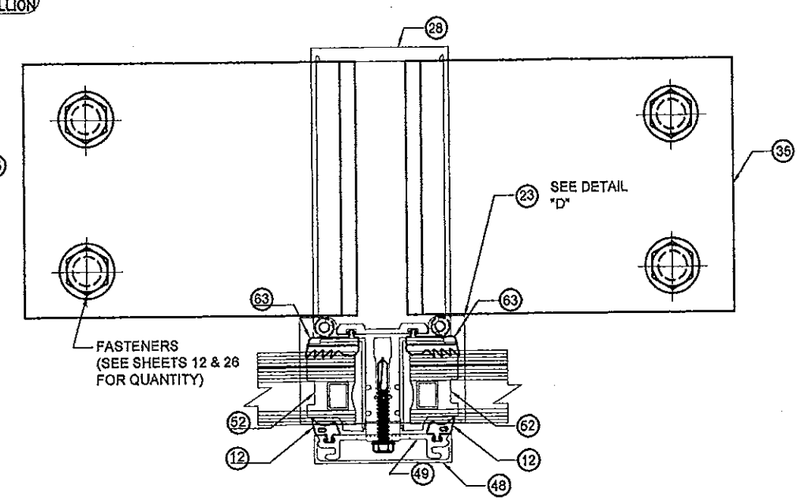

4D
STD MULLION

FLORIDA BUILDING CODE (High Velocity Hurricane Zone)

RELIANCE STORMMAX CAPTURED CURTAIN WALL SYSTEM
LARGE MISSILE IMPACT INSULATED LAMINATED GLASS (DRYGLAZED)

Oldcastle BuildingEnvelope™
803 Airport Rd - Terrell, TX 75160
www.OldcastleBE.com - Phone 800-869-4567

REV. No	DESCRIPTION	DATE	REV. No	DESCRIPTION	DATE
1	-	-	3	-	-
2	-	-	4	-	-

A.G.
DRAWN BY:

10/12/12
DATE

12-154
DRAWING No

SHEET 19 OF 40

©2012 TILTECO, INC

TILTECO INC.
TILLIT TESTING & ENGINEERING COMPANY
6335 N.W. 36th. St., Ste. 305, VIRGINIA GARDENS, FL 33166
Phone : (305)871-1530 . Fax : (305)871-1531
e-mail: tilteco@aol.com
EB-0006719
WALTER A. TILLIT Jr. P.E.
FLORIDA Lic. # 44167

WALTER A. TILLIT JR. LICENSE No. 44167 STATE OF FLORIDA PROFESSIONAL ENGINEER

P.E. SEAL/SIGNATURE/DATE

Approved as complying with the Florida Building Code
Date
NOA# 13-0516.09
Miami-Dade Product Control
By

MIAMI-DADE COUNTY

SILL & HEAD CONNECTION DETAILS FOR JAMB MULLION AT SINGLE & TWIN SPAN (PLAN)

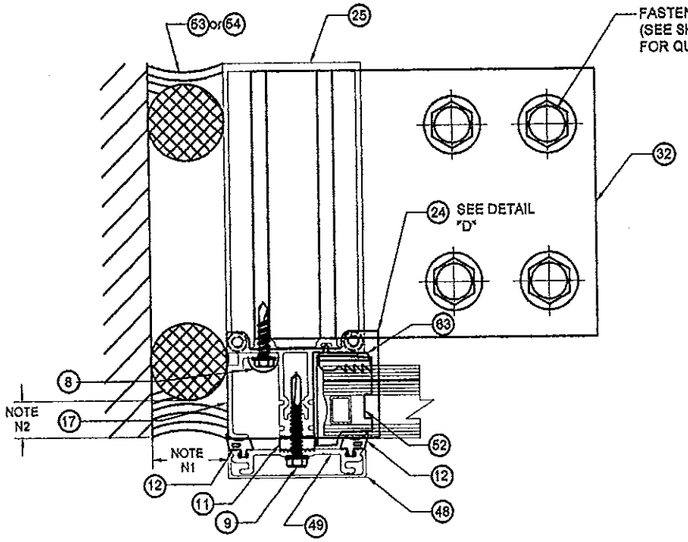

5A JAMB MULLION

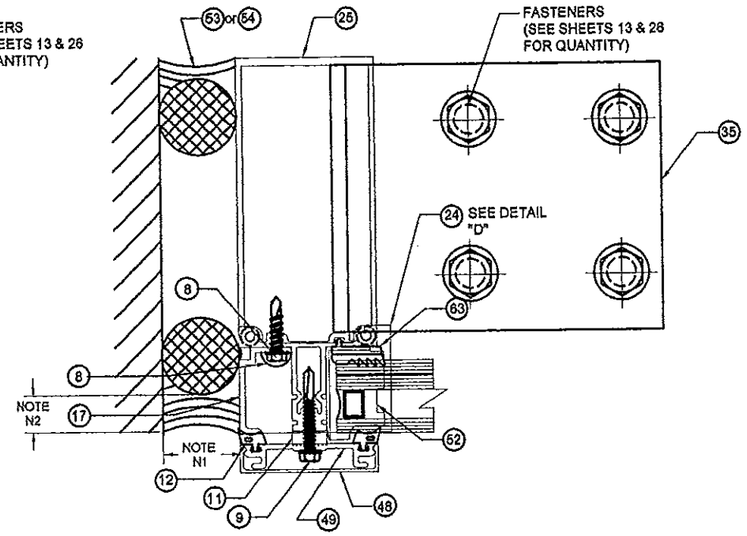

5B JAMB MULLION

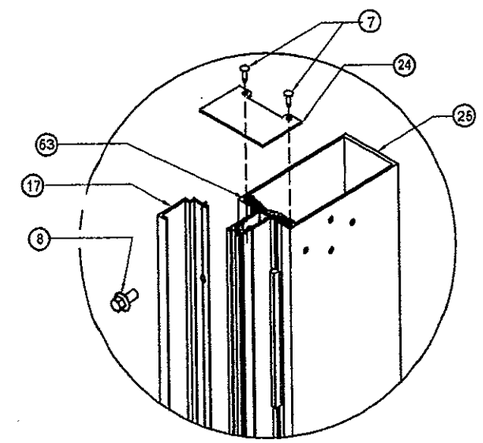

DETAIL "D"

NOTE: TO ASSURE PROPER PERIMETER SEAL AT HEAD AND SILL INSTALL HW-338 JAMB END CAP

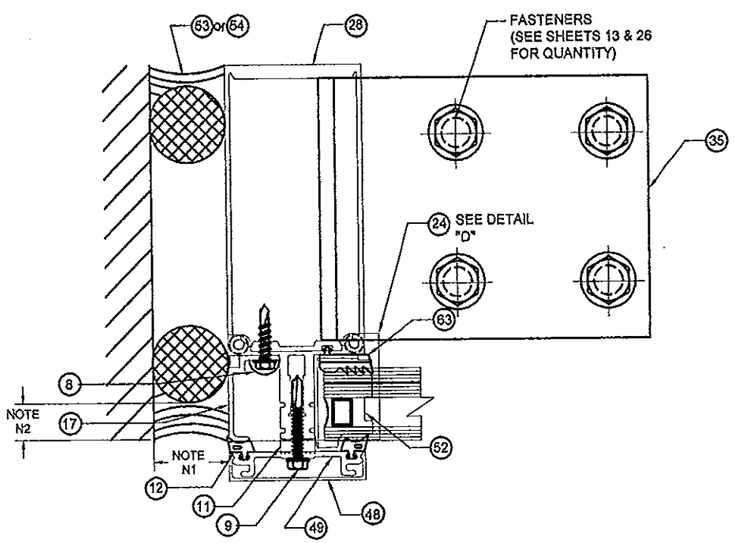

5C JAMB MULLION

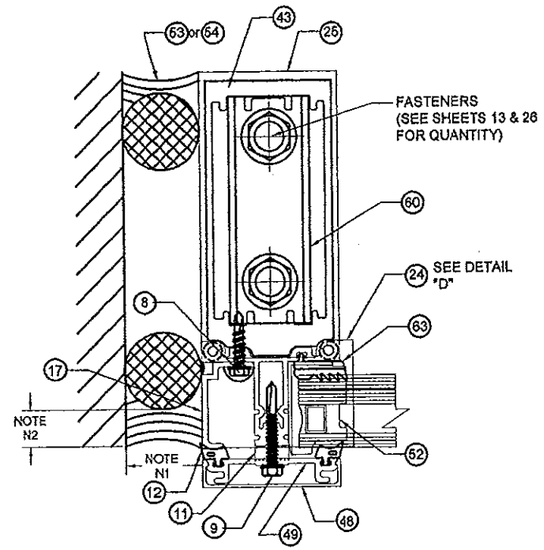

5D JAMB MULLION

SEALANT JOINT NOTES

N1 : 5/8" MIN. & 1 5/8" MAX. WIDE JOINT W/ SEALANT (53) OR (54)

N2 : 1/4" MIN. & 3/8" MAX. DEPTH JOINT W/ 1/4" DEPTH AT MIDWIDTH OF JOINT W/ SEALANT (53) OR (54)

FLORIDA BUILDING CODE (High Velocity Hurricane Zone)

©2012 TILTECO, INC

TILTECO INC.
TILLIT TESTING & ENGINEERING COMPANY
6355 N.W. 36th. St., Ste. 305, VIRGINIA GARDENS, FL 33166
Phone : (305)871-1530 . Fax : (305)871-1531
e-mail: tilteco@aol.com
EB-0006719
WALTER A. TILLIT Jr. P.E.
FLORIDA Lic. # 44167

A.G. DRAWN BY:

10/12/12 DATE

12-154 DRAWING No

SHEET 20 OF 40

RELIANCE STORMMAX CAPTURED CURTAIN WALL SYSTEM
LARGE MISSILE IMPACT INSULATED LAMINATED GLASS (DRYGLAZED)

Oldcastle BuildingEnvelope™
803 Airport Rd - Terrell, TX 75160
www.OldcastleBE.com - Phone 800-869-4567

REV. No.	DESCRIPTION	DATE	REV. No.	DESCRIPTION	DATE
1	-	-	3	-	-
2	-	-	4	-	-

WALTER A. TILLIT JR. LICENSE No. 44167 STATE OF FLORIDA PROFESSIONAL ENGINEER

P.E. SEAL/SIGNATURE/DATE

Approved as complying with the Florida Building Code
Date 03/30/2013
NOA# 13-0110.03
Miami-Dade Product Control
By

MIAMI-DADE COUNTY

SILL & HEAD CONNECTION DETAIL FOR CORNER MULLION AT SINGLE & TWIN SPAN (PLAN)

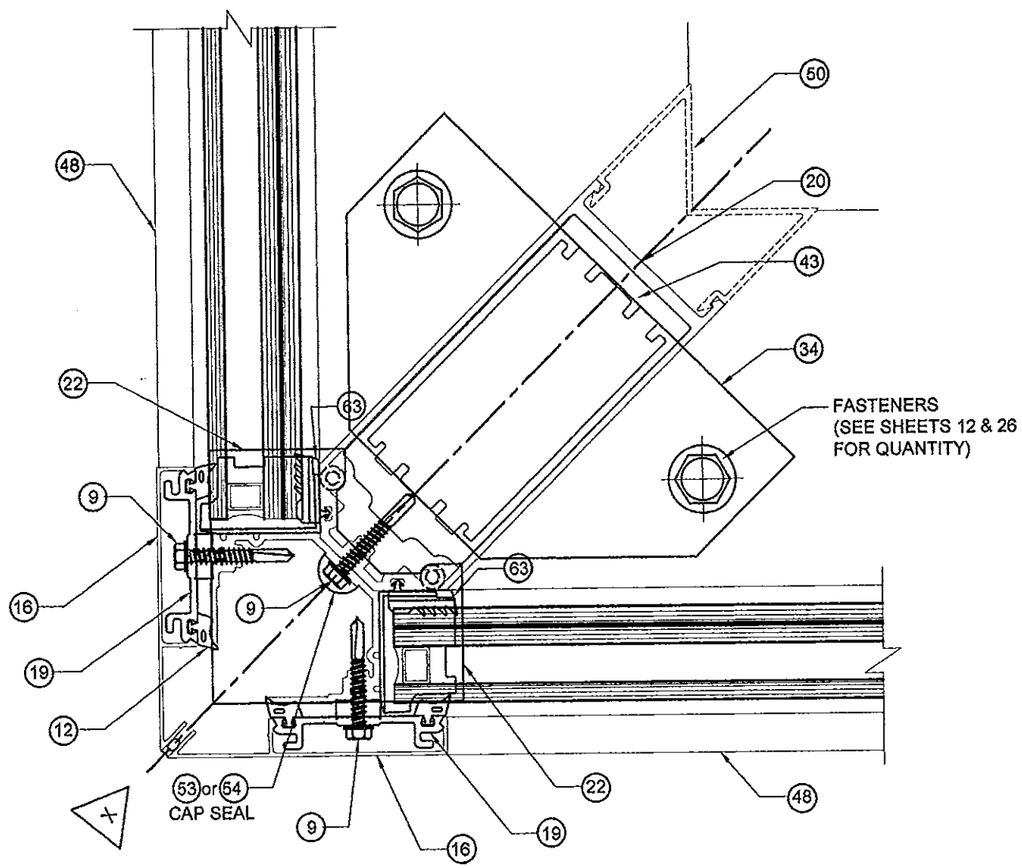

6A
CORNER MULLION

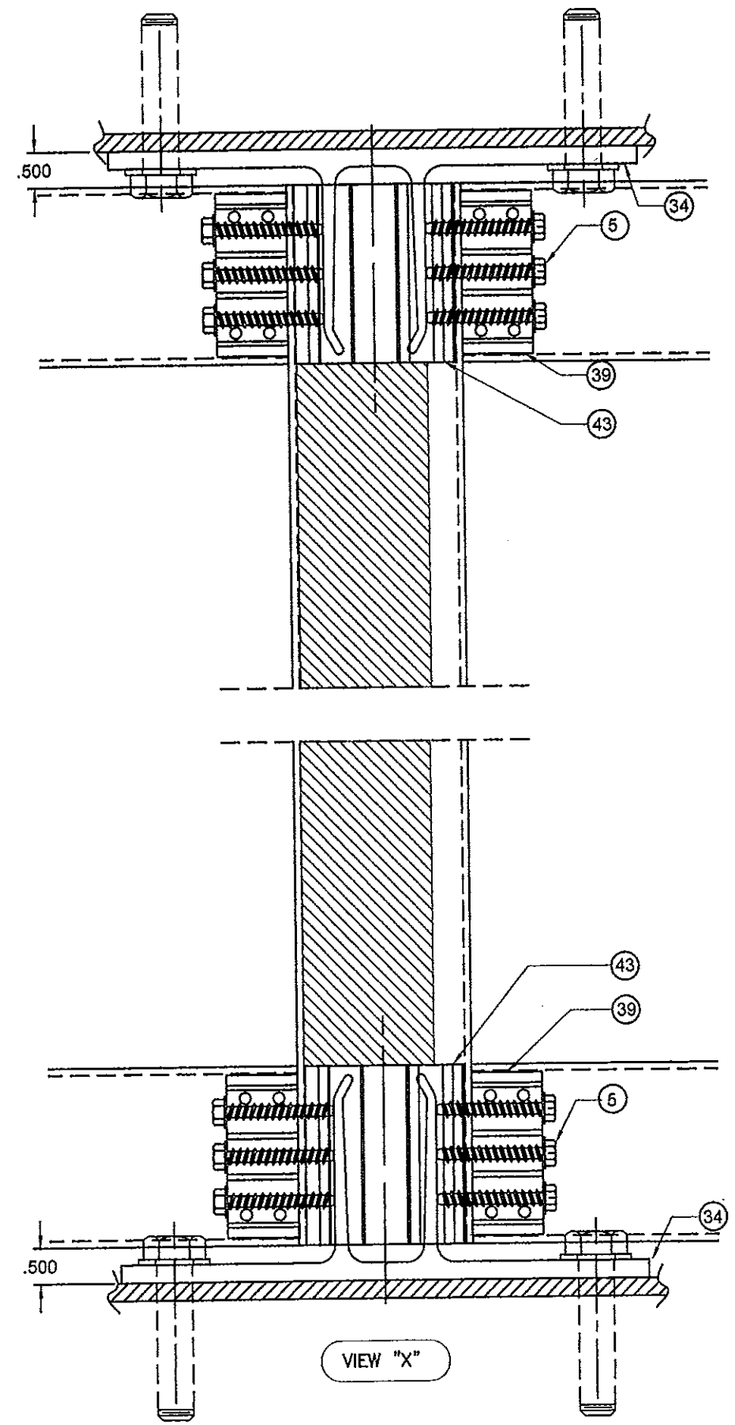

VIEW "X"

FLORIDA BUILDING CODE (High Velocity Hurricane Zone)

A.G.
DRAWN BY:

10/12/12
DATE

12-154
DRAWING No

SHEET 21 OF 40

RELIANCE STORMMAX CAPTURED CURTAIN WALL SYSTEM
LARGE MISSILE IMPACT INSULATED LAMINATED GLASS (DRYGLAZED)

Oldcastle BuildingEnvelope™
803 Airport Rd - Terrell, TX 75160
www.OldcastleBE.com - Phone 800-869-4567

REV. No	DESCRIPTION	DATE	REV. No	DESCRIPTION	DATE
1	-	-	3	-	-
2	-	-	4	-	-

©2012 TILTECO, INC

TILTECO INC.
TILLIT TESTING & ENGINEERING COMPANY
6355 N.W. 36th. St., Ste. 305, Virginia GARDENS, FL 33166
Phone : (305)871-1530, Fax : (305)871-1531
e-mail: tiltecoc@aol.com
EB-0006719
WALTER A. TILLIT Jr. P.E.
FLORIDA Lic. # 44167

WALTER A. TILLIT JR.
LICENSE
No. 44167
STATE OF FLORIDA
PROFESSIONAL ENGINEER

P.E. SEAL/SIGNATURE/DATE

Approved as complying with the Florida Building Code
Date 05/30/2013
NOA# 13-0110.05
Miami-Dade Product Control
By

MIAMI-DADE COUNTY

HORIZONTAL SECTION AT STANDARD MULLIONS (PLAN), DRYGLAZED

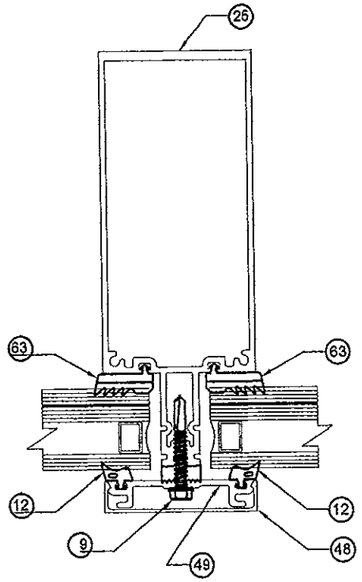

7A
STD MULLION

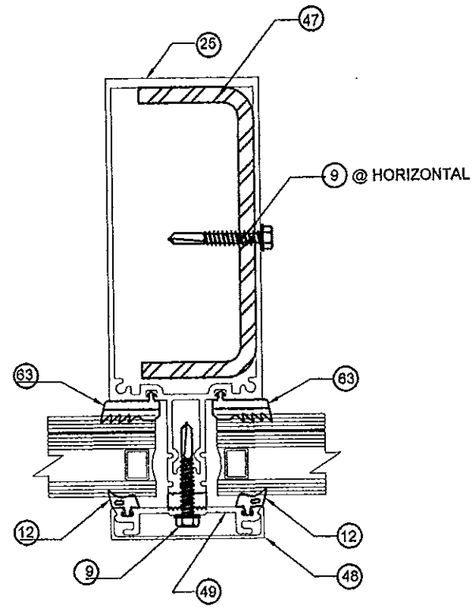

7B
STD MULLION

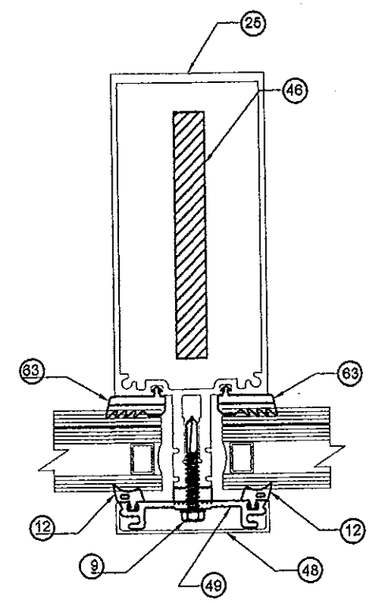

7D
STD MULLION

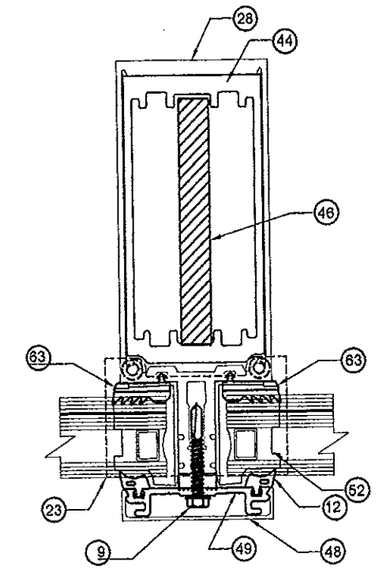

7L
STD HEAVY MULLION

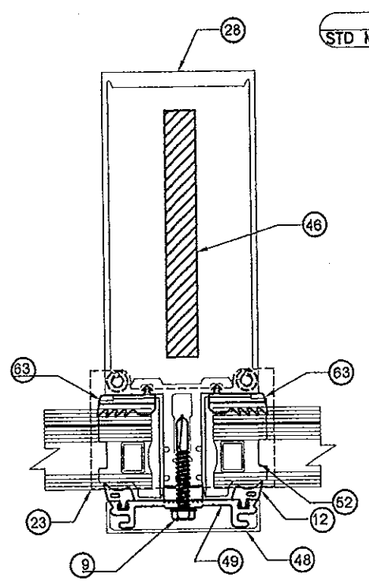

7M
STD HEAVY MULLION

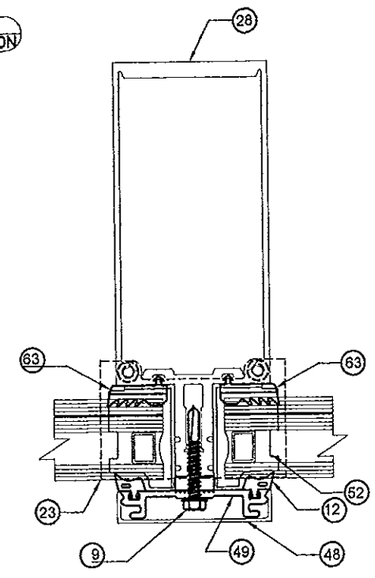

7N
STD HEAVY MULLION

FLORIDA BUILDING CODE (High Velocity Hurricane Zone)

©2012 TILTECO, INC

TILTECO INC.
TILLIT TESTING & ENGINEERING COMPANY
6335 N.W. 36th, St. Ste. 305, VIRGINIA GARDENS, FL 33166
Phone : (305)871-1530 , Fax : (305)871-1531
e-mail: tilteco@aol.com
EB-0006719
WALTER A. TILLIT Jr. P.E.
FLORIDA Lic. # 44167

A.G.
DRAWN BY:

10/12/12
DATE

12-154
DRAWING No

SHEET 22 OF 40

RELIANCE STORMMAX CAPTURED CURTAIN WALL SYSTEM
LARGE MISSILE IMPACT INSULATED LAMINATED GLASS (DRYGLAZED)

Oldcastle BuildingEnvelope™
803 Airport Rd - Terrell, TX 75160
www.OldcastleBE.com - Phone 800-869-4567

REV. No	DESCRIPTION	DATE	REV. No	DESCRIPTION	DATE
1	MDC COMMENTS	06/07/13	3		
2			4		

WALTER A. TILLIT JR.
LICENSE
No. 44167
STATE OF FLORIDA
PROFESSIONAL ENGINEER

P.E. SEAL/SIGNATURE/DATE

Approved as complying with the Florida Building Code
Date 05-30-2013
NOA# 13-0510.05
Miami-Dade Product Control
By

MIAMI-DADE COUNTY

HORIZONTAL SECTION AT JAMB MULLIONS (PLAN), DRYGLAZED

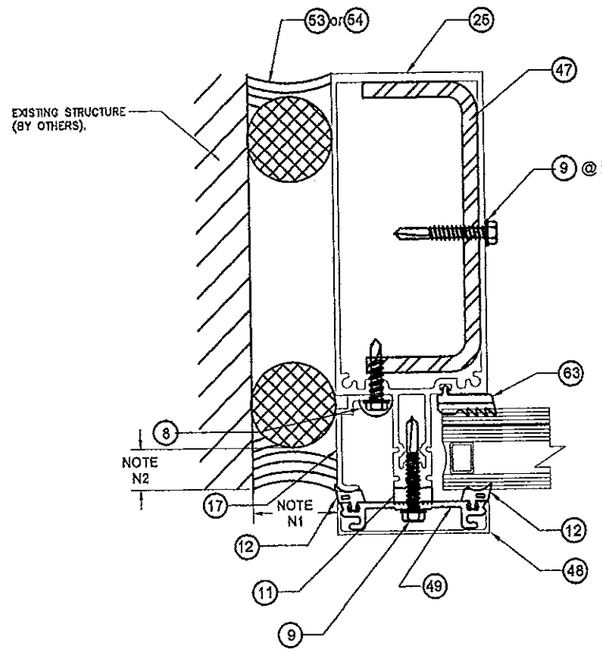

7H
JAMB MULLION

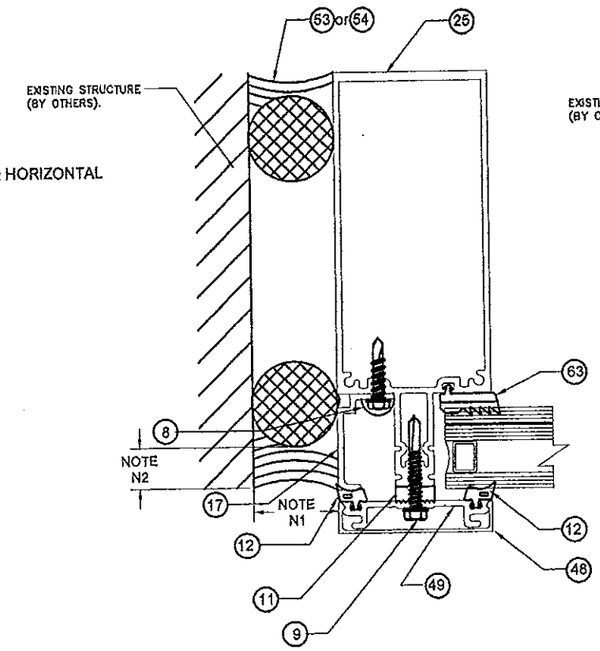

7I
JAMB MULLION

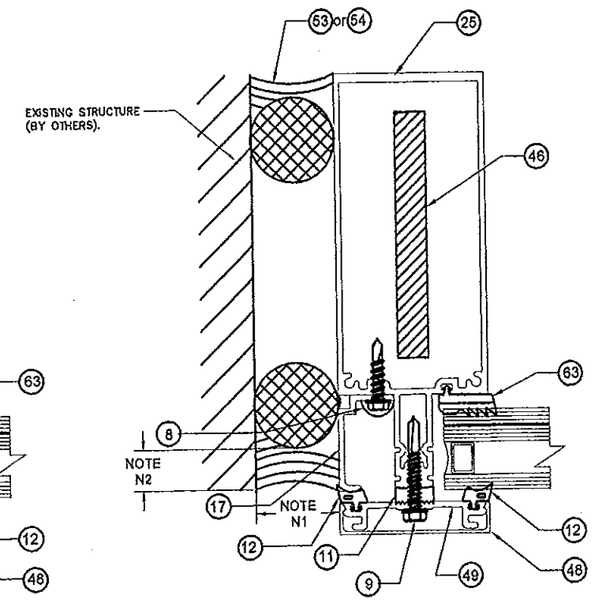

7J
JAMB MULLION

SEALANT JOINT NOTES

N1 : 5/8" MIN. & 1 5/8" MAX. WIDE JOINT W/ SEALANT (53) OR (54)

N2 : 1/4" MIN. & 3/8" MAX. DEPTH JOINT W/ 1/4" DEPTH AT MIDWIDTH OF JOINT W/ SEALANT (53) OR (54)

FLORIDA BUILDING CODE (High Velocity Hurricane Zone)

©2012 TILTECO, INC

TILTECO INC.
TILLIT TESTING & ENGINEERING COMPANY
6355 N.W. 36th. St., Ste. 305, VIRGINIA GARDENS, FL 33166
Phone : (305)871-1530 , Fax : (305)871-1531
e-mail: tilteco@aol.com
EB-0006719
WALTER A. TILLIT Jr. P.E.
FLORIDA Lic. # 44167

A.G.
DRAWN BY:

10/12/12
DATE

12-154
DRAWING No

SHEET 23 OF 40

RELIANCE STORMMAX CAPTURED CURTAIN WALL SYSTEM
LARGE MISSILE IMPACT INSULATED LAMINATED GLASS (DRYGLAZED)

Oldcastle BuildingEnvelope™
803 Airport Rd - Terrell, TX 75160
www.OldcastleBE.com - Phone 800-869-4567

REV. No	DESCRIPTION	DATE	REV. No	DESCRIPTION	DATE
1	MDC COMMENTS	06/07/13	3		
2			4		

WALTER A. TILLIT JR.
LICENSE
No. 44167
STATE OF FLORIDA
PROFESSIONAL ENGINEER

P.E. SEAL/SIGNATURE/DATE

Approved as complying with the Florida Building Code
Date 8/5/2013
NOA# 13-0110.03
Miami-Dade Product Control
By

MIAMI-DADE COUNTY

HORIZONTAL SECTION AT CORNER MULLION (PLAN), DRYGLAZED

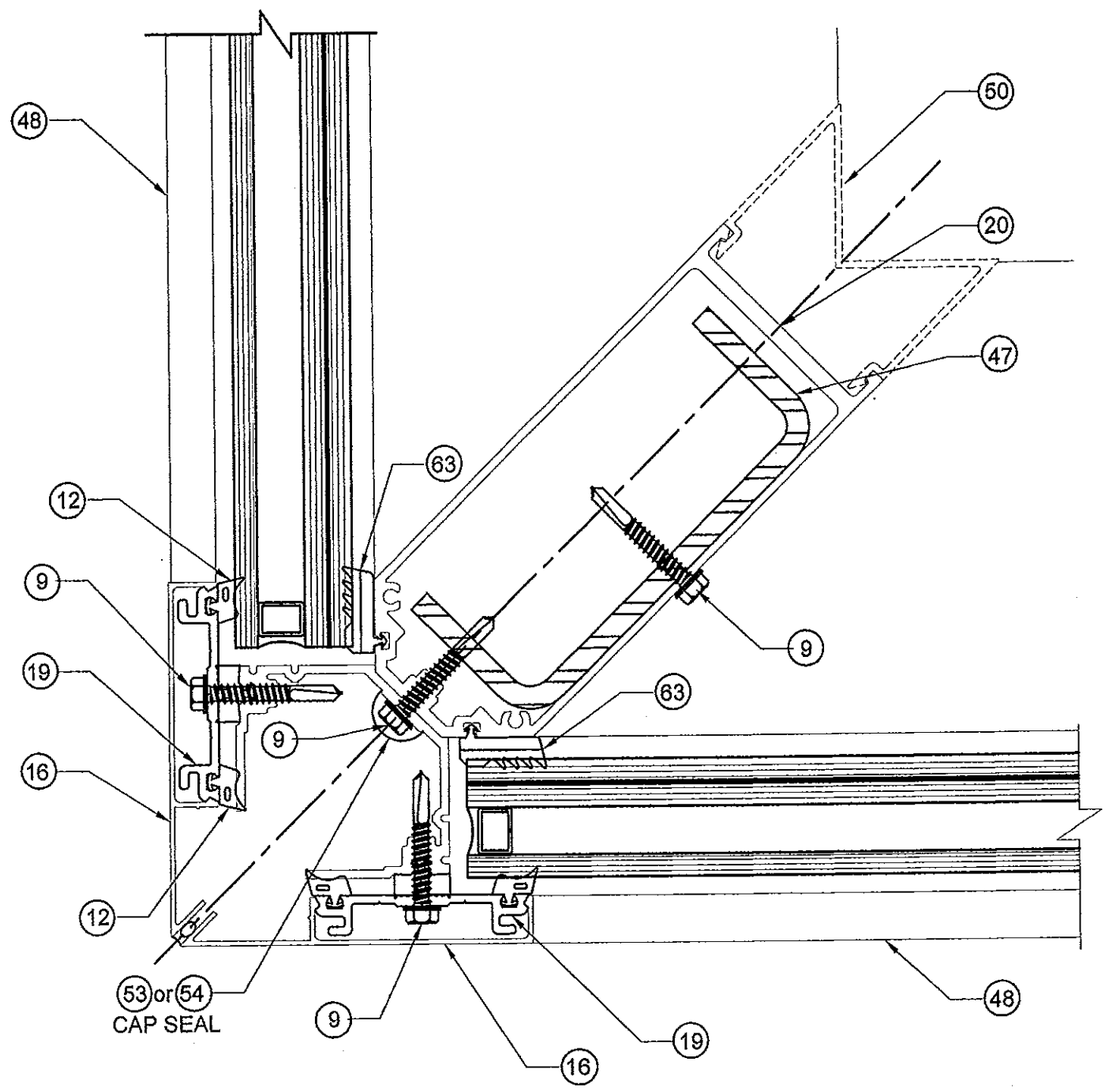

7G
CORNER MULLION

FLORIDA BUILDING CODE (High Velocity Hurricane Zone)

©2012 TILTECO, INC

TILTECO INC.
TILLIT TESTING & ENGINEERING COMPANY
6355 N.W. 36th St. Ste. 305, VIRGINIA GARDENS, FL 33166
Phone : (305)871-1530 , Fax : (305)871-1531
e-mail: tilteco@aol.com
EB-0005719
WALTER A. TILLIT Jr. P.E.
FLORIDA Lic. # 44167

A.G.
DRAWN BY:

10/12/12
DATE

12-154
DRAWING No

SHEET 24 OF 40

RELIANCE STORMMAX CAPTURED CURTAIN WALL SYSTEM
LARGE MISSILE IMPACT INSULATED LAMINATED GLASS (DRYGLAZED)

Oldcastle BuildingEnvelope™
803 Airport Rd - Terrell, TX 75160
www.OldcastleBE.com - Phone 800-869-4567

REV. No	DESCRIPTION	DATE	REV. No	DESCRIPTION	DATE
1	-	-	3	-	-
2	-	-	4	-	-

WALTER A. TILLIT JR.
LICENSE
No. 44167
STATE OF FLORIDA
PROFESSIONAL ENGINEER

P.E. SEAL/SIGNATURE/DATE

Approved as complying with the Florida Building Code
Date 05/30/2013
NOA# 13-0118.06
Miami Dade Product Control
By

MIAMI-DADE COUNTY

HORIZONTAL SECTION AT INSIDE CORNER JAMB MULLION (PLAN), DRYGLAZED

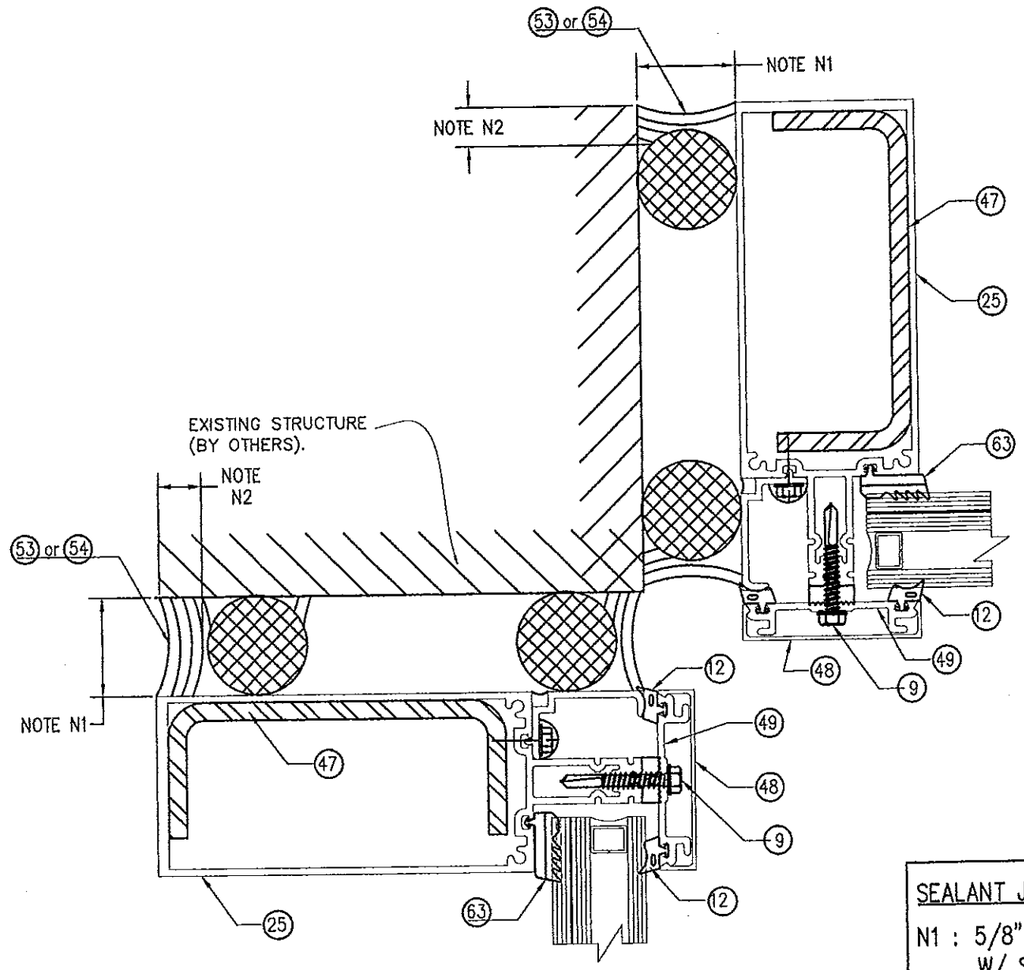

7K
JAMB MULLION AT INSIDE CORNER

SEALANT JOINT NOTES

N1 : 5/8" MIN. & 1 5/8" MAX. WIDE JOINT W/ SEALANT 53 OR 54

N2 : 1/4" MIN. & 3/8" MAX. DEPTH JOINT W/ 1/4" DEPTH AT MIDWIDTH OF JOINT W/ SEALANT 53 OR 54

FLORIDA BUILDING CODE (High Velocity Hurricane Zone)

©2012 TILTECO, INC

TILTECO INC.
TILLIT TESTING & ENGINEERING COMPANY
6355 N.W. 36th. St. Ste. 305, VIRGINIA GARDENS, FL 33166
Phone : (305)871-1530 , Fax : (305)871-1531
e-mail: tilteco@aol.com
EB-0006719
WALTER A. TILLIT Jr. P.E.
FLORIDA Lic. # 44167

A.G.
DRAWN BY:

10/12/12
DATE

12-154
DRAWING No

SHEET 25 OF 40

RELIANCE STORMMAX CAPTURED CURTAIN WALL SYSTEM
LARGE MISSILE IMPACT INSULATED LAMINATED GLASS (DRYGLAZED)

Oldcastle BuildingEnvelope™
803 Airport Rd - Terrell, TX 75160
www.OldcastleBE.com - Phone 800-669-4567

REV. No	DESCRIPTION	DATE	REV. No	DESCRIPTION	DATE
1	-	-	3	-	-
2	-	-	4	-	-

WALTER A. TILLIT JR. LICENSE No. 44167 STATE OF FLORIDA PROFESSIONAL ENGINEER

P.E. SEAL/SIGNATURE/DATE

Approved as complying with the Florida Building Code
Date 8/30/2013
NOA# 13-0110.03
Miami-Dade Product Control
By

MIAMI-DADE COUNTY

APPLICABILITY OF REQUIRED ANCHORS & FASTENERS FOR MULLION TYPE & SUBSTRATE (SCHEMATIC)

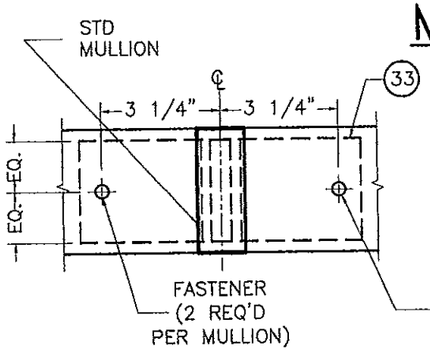

CONCRETE & STEEL

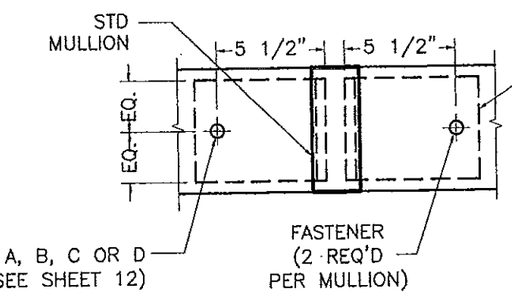

CONCRETE & STEEL

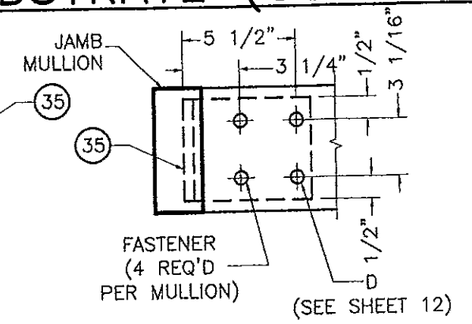

STEEL

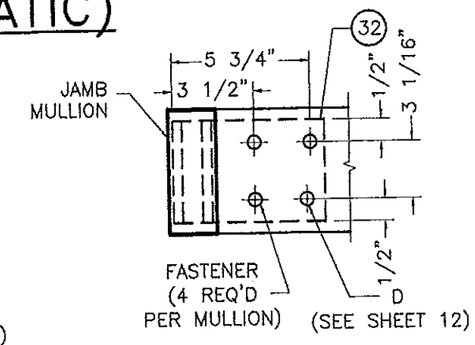

STEEL

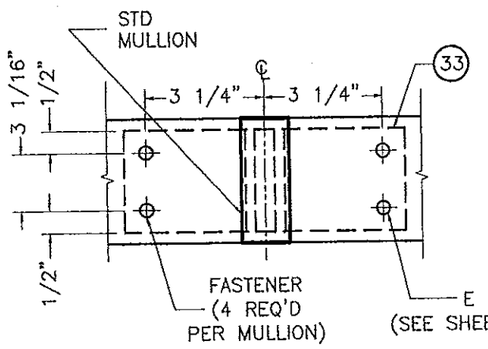

WOOD

INSTALLATIONS W/ "T" ANCHOR (33)
N.T.S.

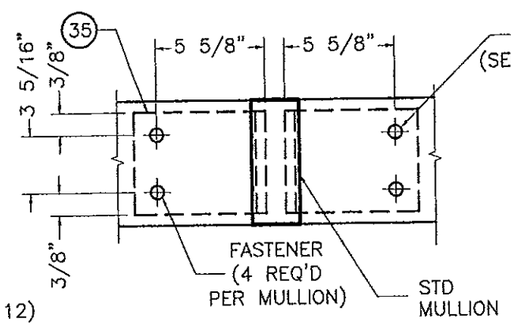

WOOD

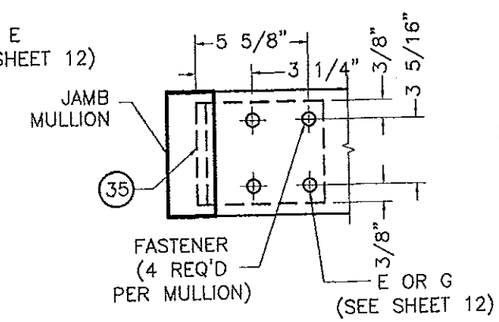

CONCRETE & WOOD

INSTALLATIONS W/ "L" ANCHOR (35) * N.T.S.
* LIMITED TO 70 PSF A.S.D. DESIGN LOAD FOR UP TO 12'-0" MULLION SPAN & 4'-0" SPACING

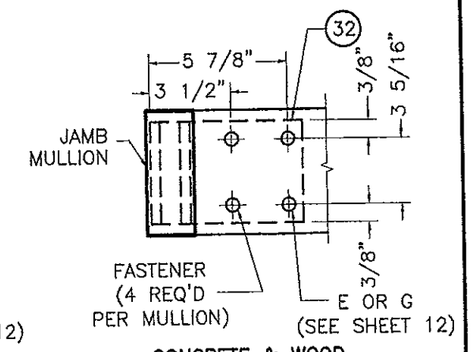

CONCRETE & WOOD

INSTALLATIONS W/ "F" ANCHOR (32)
N.T.S.

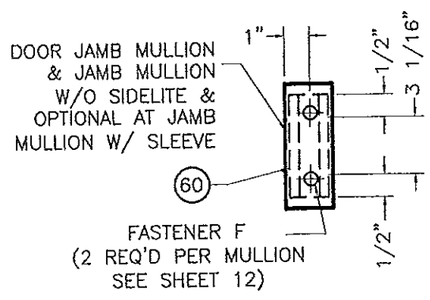

CONCRETE

INSTALLATION OF DOOR JAMB MULLION, JAMB MULLION AT DOOR W/ NON SIDELITE AND OPTIONAL AT JAMB MULLION W/ "U" ANCHOR (60)

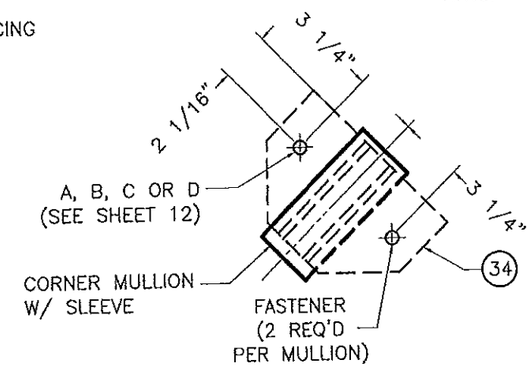

CONCRETE OR STEEL

INSTALLATION OF CORNER MULLION W/ HW-105-02 "T" ANCHOR (34)
N.T.S.

FLORIDA BUILDING CODE (High Velocity Hurricane Zone)

RELIANCE STORMMAX CAPTURED CURTAIN WALL SYSTEM
LARGE MISSILE IMPACT INSULATED LAMINATED GLASS (DRYGLAZED)

Oldcastle BuildingEnvelope™
803 Airport Rd - Terrell, TX 75160
www.OldcastleBE.com - Phone 800-869-4567

REV. No.	DESCRIPTION	DATE	REV. No.	DESCRIPTION	DATE
1	-	-	3	-	-
2	-	-	4	-	-

A.G. DRAWN BY: | 10/12/12 DATE | 12-154 DRAWING No | SHEET 26 OF 40

©2012 TILTECO, INC

TILTECO INC.
TILLIT TESTING & ENGINEERING COMPANY
6355 N.W. 36th. St. Ste. 305, VIRGINIA GARDENS, FL 33166
Phone : (305)871-1530, Fax : (305)871-1531
e-mail: tilteco@aol.com
EB-0006719
WALTER A. TILLIT Jr. P.E.
FLORIDA Lic. # 44167

WALTER A. TILLIT JR. LICENSE No. 44167 STATE OF FLORIDA PROFESSIONAL ENGINEER

P.E. SEAL/SIGNATURE/DATE

Approved as complying with the Florida Building Code
Date 05/30/2013
NOA# 13-0510.06
Miami-Dade Product Control
By

MIAMI-DADE COUNTY

JAMB MULLION INTERMEDIATE SUPPORT W/ DEAD & WIND LOAD ANCHOR * AT TWIN SPAN

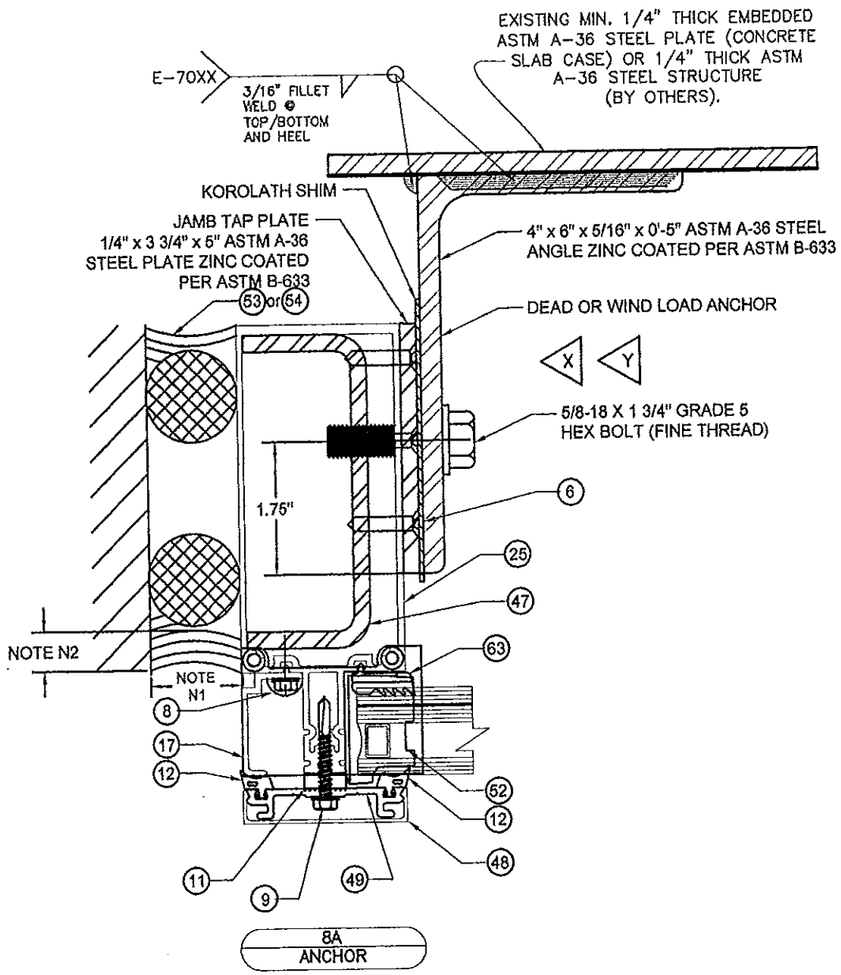

8A ANCHOR

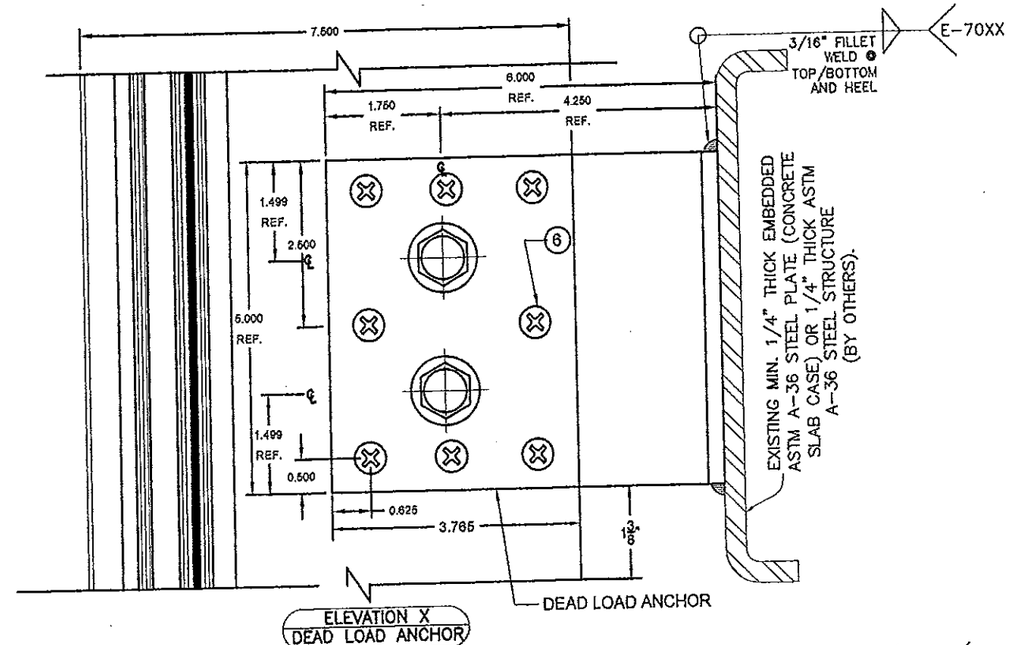

ELEVATION X
DEAD LOAD ANCHOR

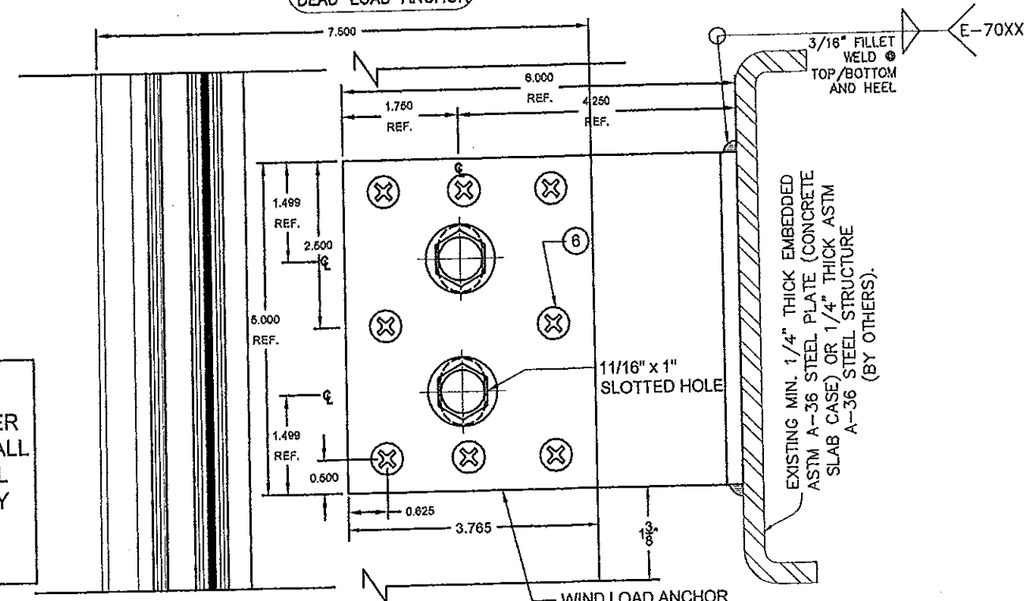

ELEVATION Y
WIND LOAD ANCHOR

SEALANT JOINT NOTES

N1 : 5/8" MIN. & 1 5/8" MAX. WIDE JOINT W/ SEALANT (53) OR (54)

N2 : 1/4" MIN. & 3/8" MAX. DEPTH JOINT W/ 1/4" DEPTH AT MIDWIDTH OF JOINT W/ SEALANT (53) OR (54)

*ONLY ONE DEADLOAD APPLICATION PER MULTIPLE SPAN MULLION/JAMB, ANY OTHER ANCHOR IN THE SAME MULTIPLE SPAN SHALL ALLOW FREE MOVEMENT DUE TO THERMAL EXPANSION. MULTIPLE SPAN MULLION MAY BE CONNECTED BY SPLICE AS SHOWN ON SHEETS 31 THRU 34.

FLORIDA BUILDING CODE (High Velocity Hurricane Zone)

RELIANCE STORMMAX CAPTURED CURTAIN WALL SYSTEM
LARGE MISSILE IMPACT INSULATED LAMINATED GLASS (DRYGLAZED)

Oldcastle BuildingEnvelope™
803 Airport Rd - Terrell, TX 75160
www.OldcastleBE.com - Phone 800-869-4567

REV. No	DESCRIPTION	DATE	REV. No	DESCRIPTION	DATE
1	-	-	3	-	-
2	-	-	4	-	-

A.G. DRAWN BY:
10/12/12 DATE
12-154 DRAWING No
SHEET 27 OF 40

©2012 TILTECO, INC

TILTECO INC.
TILLIT TESTING & ENGINEERING COMPANY
6355 N.W. 36th. St. Ste. 305, VIRGINIA GARDENS, FL 33166
Phone : (305)871-1530 , Fax : (305)871-1531
e-mail: tilteco@aol.com
EB-0006719
WALTER A. TILLIT Jr. P.E.
FLORIDA Lic. # 44167

WALTER A. TILLIT JR. LICENSE No. 44167 STATE OF FLORIDA PROFESSIONAL ENGINEER

P.E. SEAL/SIGNATURE/DATE

Approved as complying with the Florida Building Code
Date 03/30/2015
NOA # 13-0110.05
Miami-Dade Product Control
By

MIAMI-DADE COUNTY

STANDARD MULLION INTERMEDIATE SUPPORT W/ DEAD & WIND LOAD ANCHOR * AT TWIN SPAN

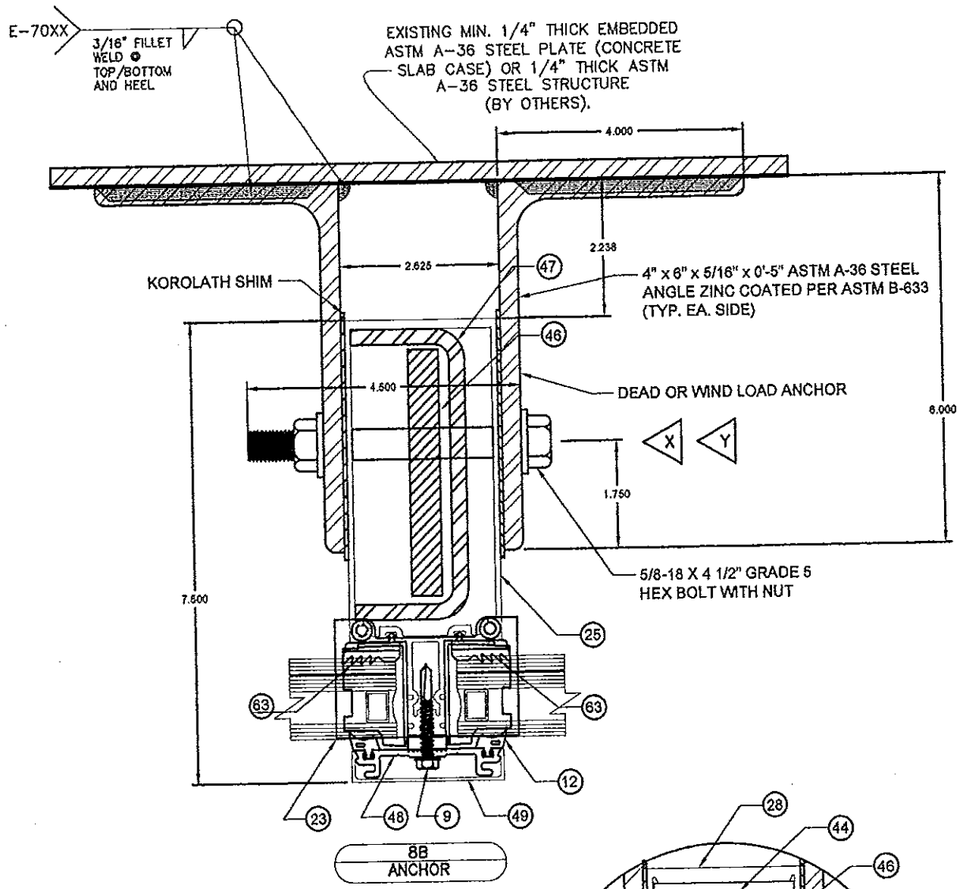

8B ANCHOR

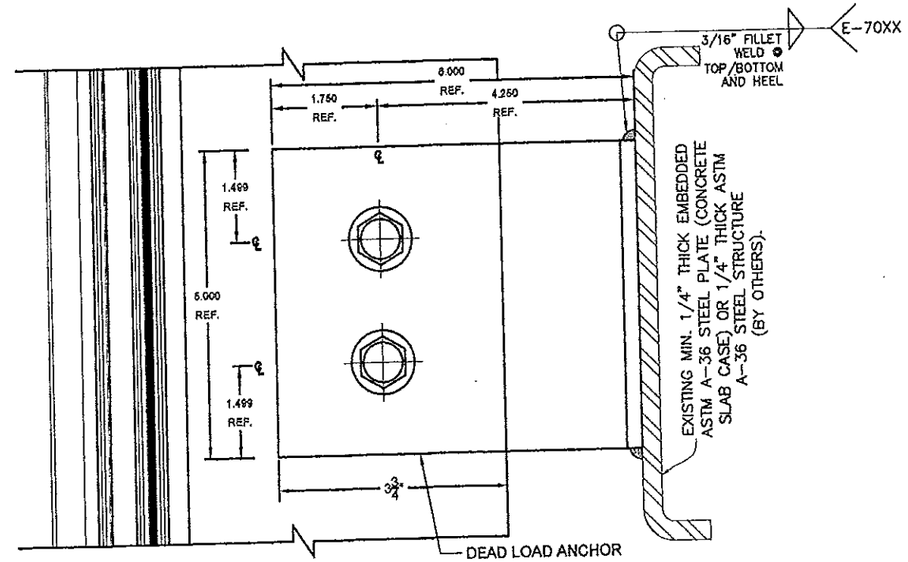

ELEVATION X
DEAD LOAD ANCHOR

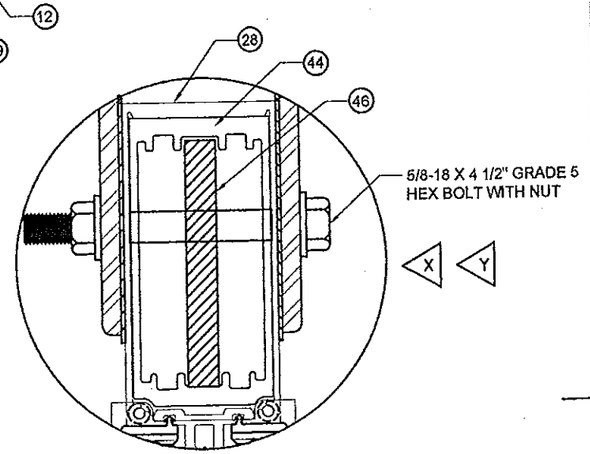

8C ANCHOR

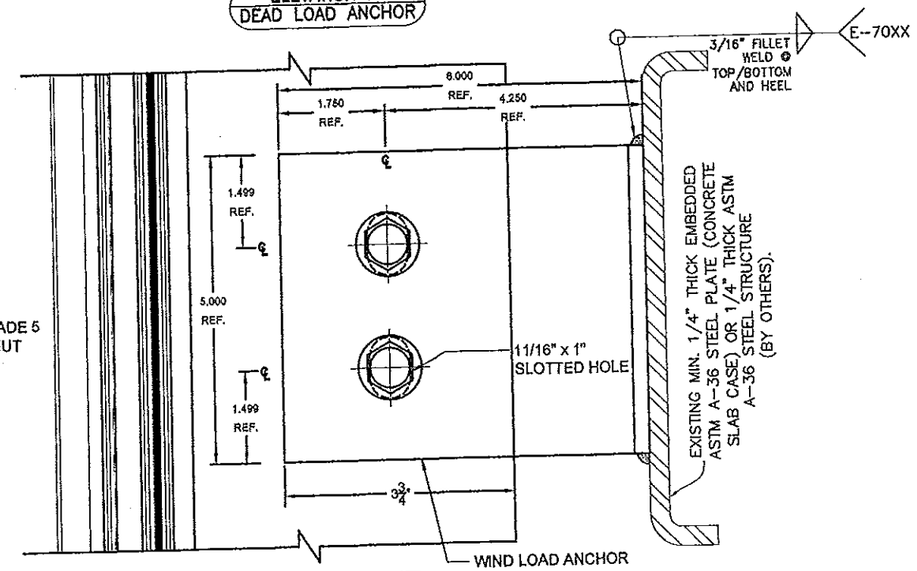

ELEVATION Y
WIND LOAD ANCHOR

*ONLY ONE DEADLOAD APPLICATION PER MULTIPLE SPAN MULLION/JAMB, ANY OTHER ANCHOR IN THE SAME MULTIPLE SPAN SHALL ALLOW FREE MOVEMENT DUE TO THERMAL EXPANSION. MULTIPLE SPAN MULLION MAY BE CONNECTED BY SPLICE AS SHOWN ON SHEETS 31 THRU 34.

FLORIDA BUILDING CODE (High Velocity Hurricane Zone)

©2012 TILTECO, INC

A.G. DRAWN BY:
10/12/12 DATE
12-154 DRAWING No
SHEET 28 OF 40

RELIANCE STORMMAX CAPTURED CURTAIN WALL SYSTEM
LARGE MISSILE IMPACT INSULATED LAMINATED GLASS (DRY/GLAZED)

Oldcastle BuildingEnvelope™
803 Airport Rd - Terrell, TX 75160
www.OldcastleBE.com - Phone 800-869-4567

REV. No	DESCRIPTION	DATE	REV. No	DESCRIPTION	DATE
1	-	-	3	-	-
2	-	-	4	-	-

TILTECO INC.
TILLIT TESTING & ENGINEERING COMPANY
6555 N.W. 36th. St., Ste. 305, VIRGINIA GARDENS, FL 33166
Phone : (305)871-1530 , Fax : (305)871-1531
e-mail: tilteco@aol.com
EB-0006719
WALTER A. TILLIT Jr. P.E.
FLORIDA Lic. # 44167

WALTER A. TILLIT JR. LICENSE No. 44167 STATE OF FLORIDA PROFESSIONAL ENGINEER

P.E. SEAL/SIGNATURE/DATE

Approved as complying with the Florida Building Code
Date 05/30/13
NOA# 13-0318.03
Miami-Dade Product Control
By

MIAMI-DADE COUNTY

CORNER MULLION INTERMEDIATE SUPPORT W/ DEAD & WIND LOAD ANCHOR * AT TWIN SPAN

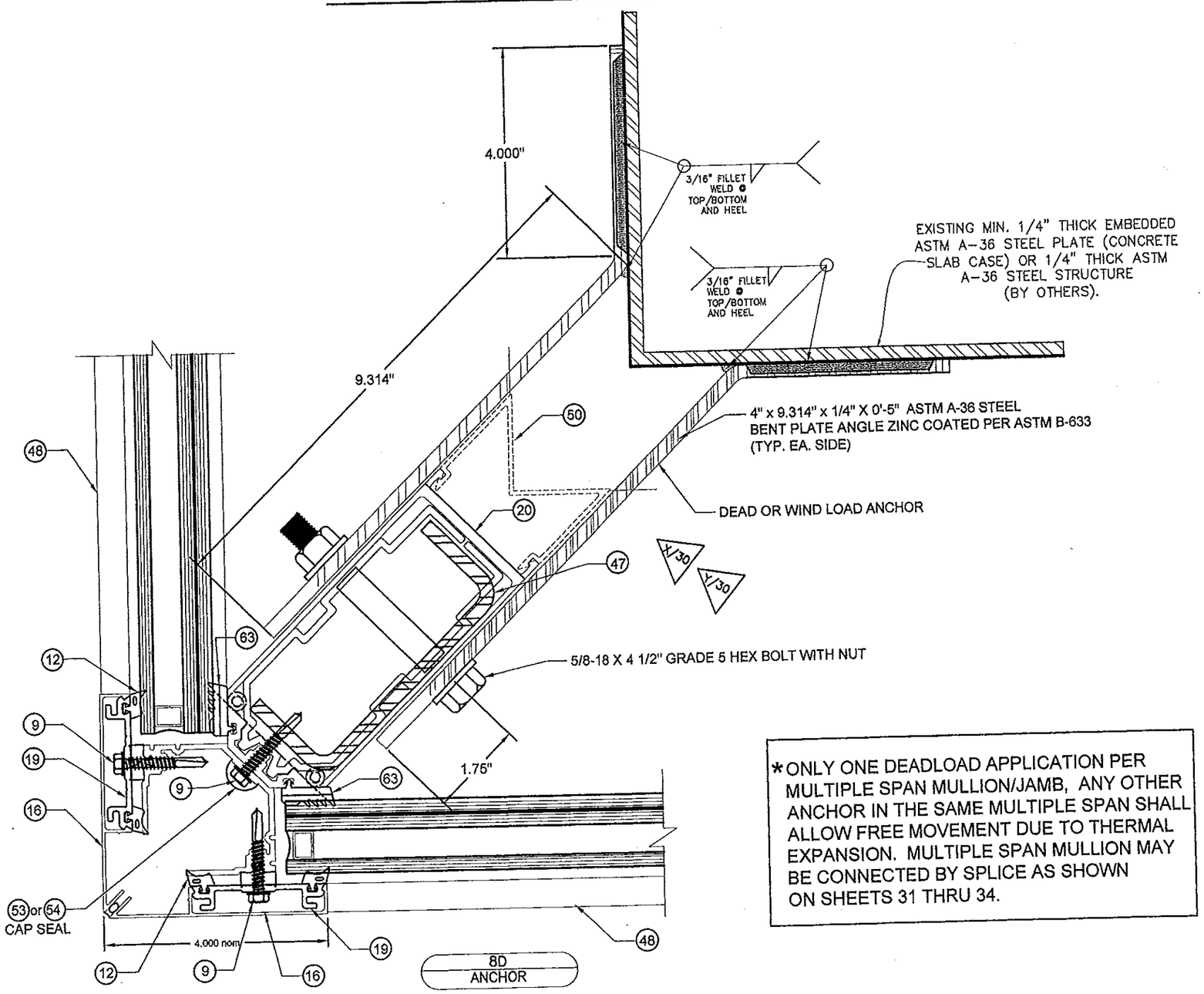

*ONLY ONE DEADLOAD APPLICATION PER MULTIPLE SPAN MULLION/JAMB, ANY OTHER ANCHOR IN THE SAME MULTIPLE SPAN SHALL ALLOW FREE MOVEMENT DUE TO THERMAL EXPANSION. MULTIPLE SPAN MULLION MAY BE CONNECTED BY SPLICE AS SHOWN ON SHEETS 31 THRU 34.

FLORIDA BUILDING CODE (High Velocity Hurricane Zone)

©2012 TILTECO, INC

A.G. DRAWN BY:
10/12/12 DATE
12-154 DRAWING No
SHEET 29 OF 40

RELIANCE STORMMAX CAPTURED CURTAIN WALL SYSTEM
LARGE MISSILE IMPACT INSULATED LAMINATED GLASS (DRYGLAZED)

Oldcastle BuildingEnvelope™
803 Airport Rd - Terrell, TX 75160
www.OldcastleBE.com - Phone 800-869-4567

REV. No.	DATE	DESCRIPTION	REV. No.	DATE	DESCRIPTION
1	-	-	3	-	-
2	-	-	4	-	-

TILTECO INC.
TILLIT TESTING & ENGINEERING COMPANY
6305 N.W. 36th. St., Ste. 305, VIRGINIA GARDENS, FL 33166
Phone : (305)871-1530 . Fax : (305)871-1531
e-mail: tilteco@aol.com
EB-0006719
WALTER A. TILLIT Jr. P.E.
FLORIDA Lic. # 44167

WALTER A. TILLIT JR. LICENSE No. 44167 STATE OF FLORIDA PROFESSIONAL ENGINEER

P.E. SEAL/SIGNATURE/DATE

Approved as complying with the Florida Building Code
Date 05/30/2013
NOA# 13-0110.05
Miami-Dade Product Control
By

MIAMI-DADE COUNTY

CORNER MULLION INTERMEDIATE SUPPORT W/ DEAD & WIND LOAD ANCHOR AT TWIN SPAN

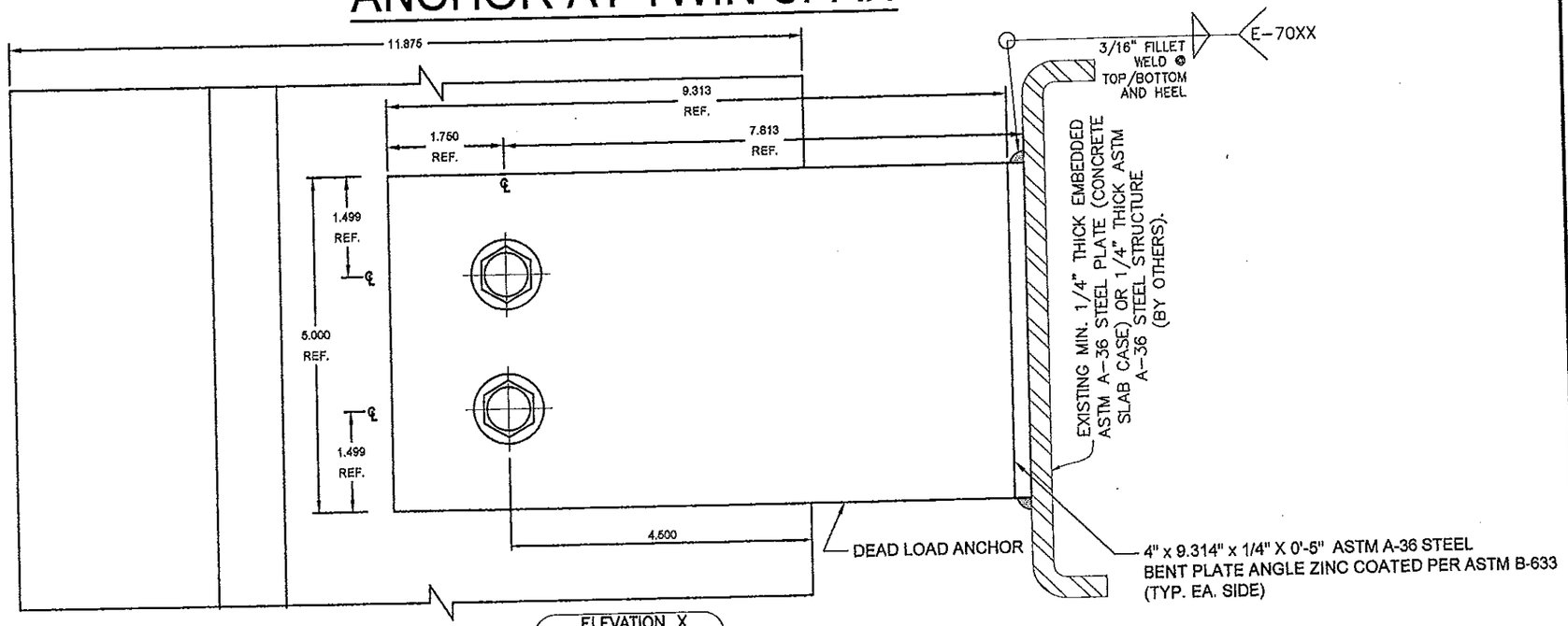

ELEVATION X
DEAD LOAD ANCHOR

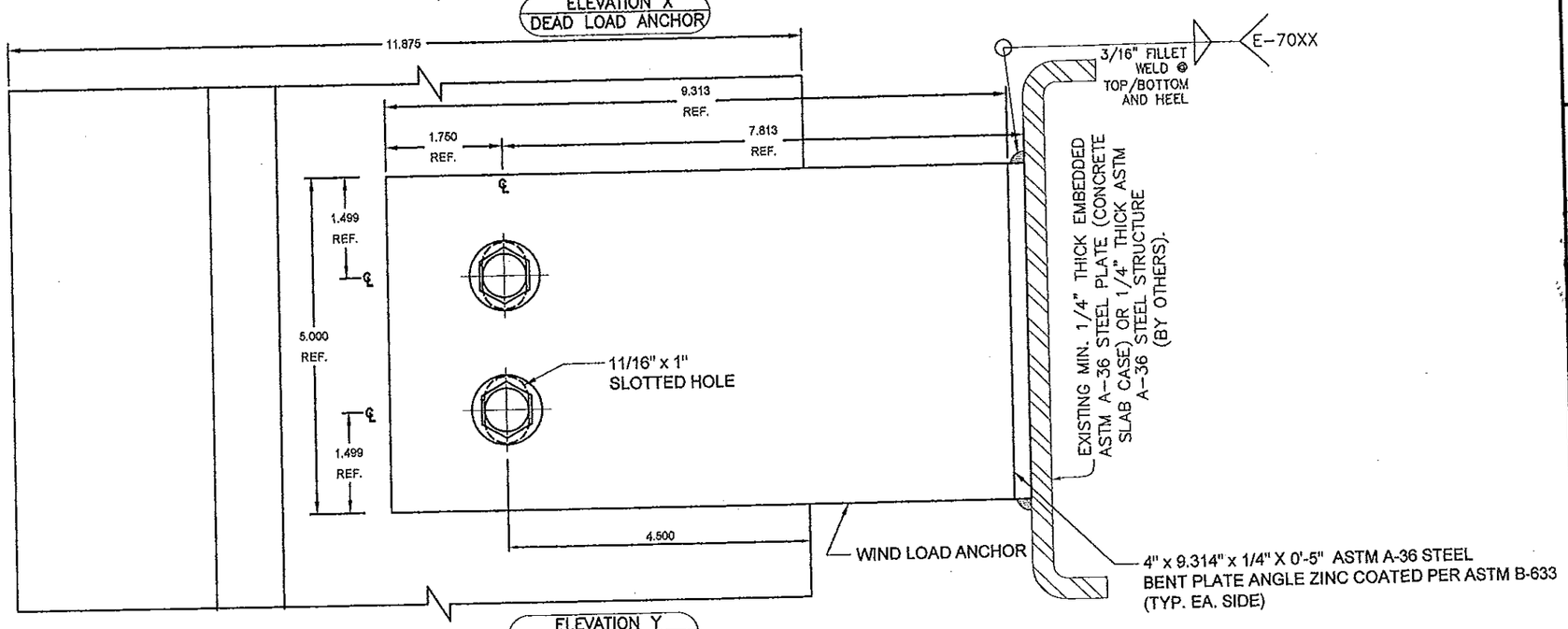

ELEVATION Y
WIND LOAD ANCHOR

FLORIDA BUILDING CODE (High Velocity Hurricane Zone)

©2012 TILTECO, INC

TILTECO INC.
TILLIT TESTING & ENGINEERING COMPANY
6335 N.W. 36th. St., Ste. 305, VIRGINIA GARDENS, FL 33166
Phone : (305)871-1530 , Fax : (305)871-1531
e-mail: tilteco@aol.com
EB-0006719
WALTER A. TILLIT Jr. P.E.
FLORIDA Lic. # 44167

WALTER A. TILLIT JR. LICENSE No. 44167 STATE OF FLORIDA PROFESSIONAL ENGINEER

P.E. SEAL/SIGNATURE/DATE

Approved as complying with the Florida Building Code
Date 05/30/2013
NOA# 13-0116.03
Miami-Dade Product Control
By

MIAMI-DADE COUNTY

RELIANCE STORMMAX CAPTURED CURTAIN WALL SYSTEM
LARGE MISSILE IMPACT INSULATED LAMINATED GLASS (DRYGLAZED)

Oldcastle BuildingEnvelope™
803 Airport Rd - Terrell, TX 75160
www.OldcastleBE.com - Phone 800-869-4567

REV. No	DESCRIPTION	DATE
1	-	-
2	-	-
3	-	-
4	-	-

A.G.
DRAWN BY:

10/12/12
DATE

12-154
DRAWING No

SHEET 30 OF 40

JAMB AND STANDARD MULLION SPLICE DETAILS AT TWIN SPAN (PLAN), DRYGLAZED

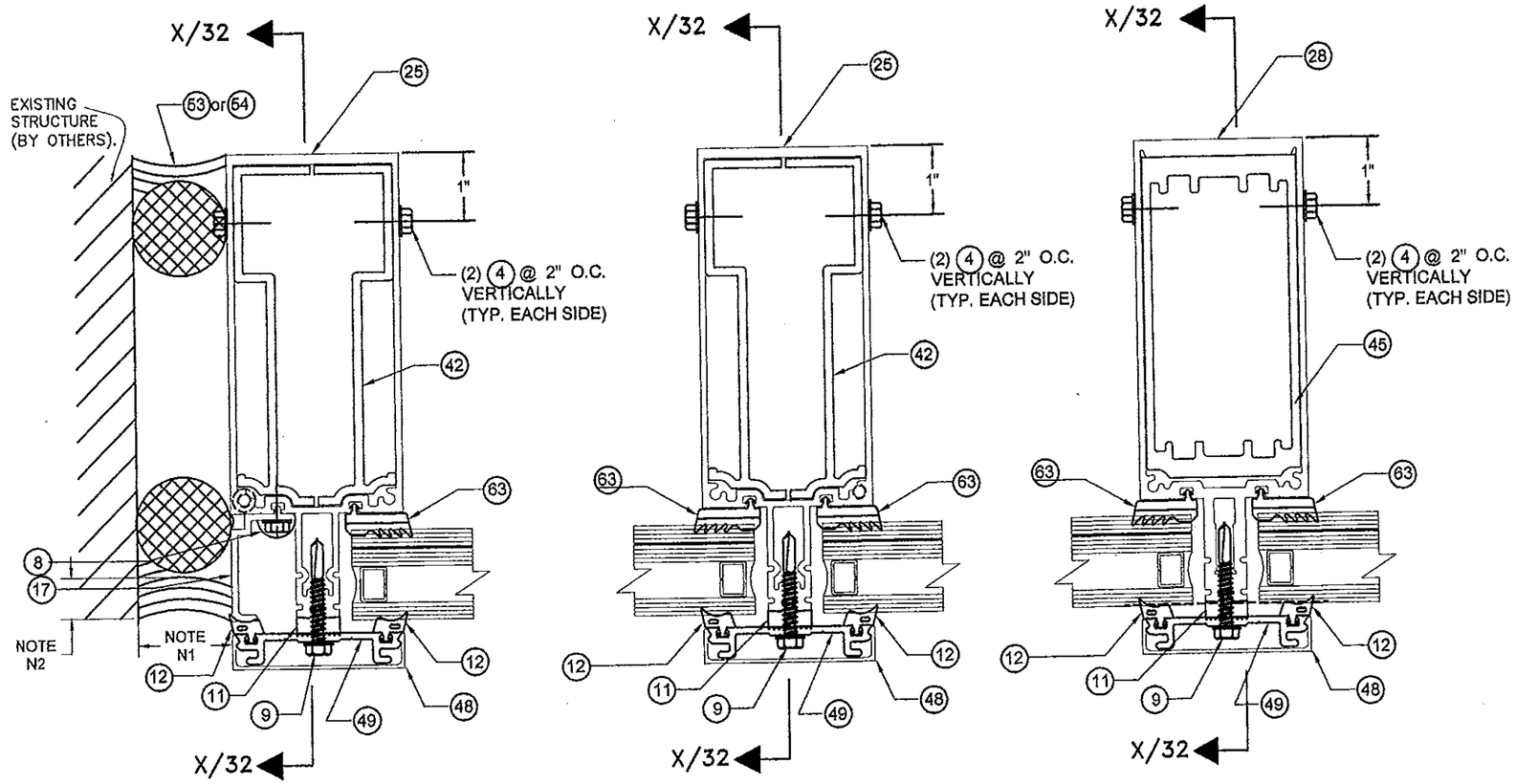

SEALANT JOINT NOTES

N1 : 5/8" MIN. & 1 5/8" MAX. WIDE JOINT W/ SEALANT (53) OR (54)

N2 : 1/4" MIN. & 3/8" MAX. DEPTH JOINT W/ 1/4" DEPTH AT MIDWIDTH OF JOINT W/ SEALANT (53) OR (54)

FLORIDA BUILDING CODE (High Velocity Hurricane Zone)

RELIANCE STORMMAX CAPTURED CURTAIN WALL SYSTEM
LARGE MISSILE IMPACT INSULATED LAMINATED GLASS (DRYGLAZED)

Oldcastle BuildingEnvelope™
803 Airport Rd - Terrell, TX 75160
www.OldcastleBE.com - Phone 800-869-4567

REV. No	DATE	DESCRIPTION	REV. No	DATE	DESCRIPTION
1	-	-	3	-	-
2	-	-	4	-	-

A.G. DRAWN BY:
10/12/12 DATE
12-154 DRAWING No
SHEET 31 OF 40

©2012 TILTECO, INC

TILTECO INC.
TILLIT TESTING & ENGINEERING COMPANY
6355 N.W. 36th. St., Ste. 305, VIRGINIA GARDENS, FL 33166
Phone : (305)871-1530 . Fax : (305)871-1531
e-mail: tilteco@aol.com
EB-0006719
WALTER A. TILLIT Jr. P.E.
FLORIDA Lic. # 44167

WALTER A. TILLIT JR. LICENSE No. 44167 STATE OF FLORIDA PROFESSIONAL ENGINEER

P.E. SEAL/SIGNATURE/DATE

Approved as complying with the Florida Building Code
Date 05/30/2013
NOA# 13-0116.05
Miami-Dade Product Control
By

MIAMI-DADE COUNTY

JAMB AND STANDARD MULLION SPLICE SECTION AT TWIN SPAN, DRYGLAZED

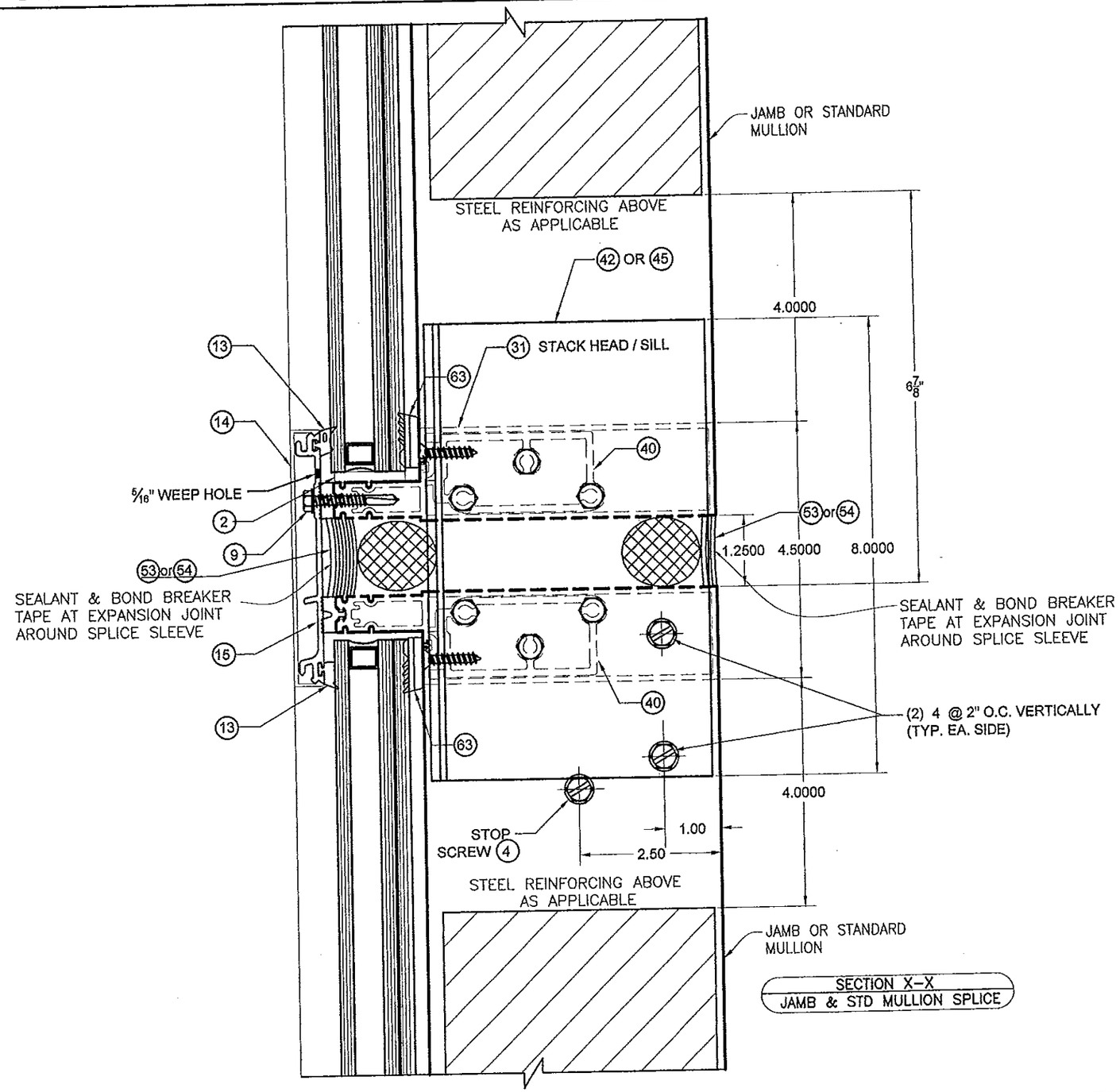

SECTION X–X
JAMB & STD MULLION SPLICE

FLORIDA BUILDING CODE (High Velocity Hurricane Zone)

A.G. DRAWN BY:
10/12/12 DATE
12–154 DRAWING No
SHEET 32 OF 40

RELIANCE STORMMAX CAPTURED CURTAIN WALL SYSTEM
LARGE MISSILE IMPACT INSULATED LAMINATED GLASS (DRYGLAZED)

Oldcastle BuildingEnvelope™
803 Airport Rd - Terrell, TX 75160
www.OldcastleBE.com - Phone 800-869-4567

REV. No.	DESCRIPTION	DATE	REV. No.	DESCRIPTION	DATE
1	-	-	3	-	-
2	-	-	4	-	-

©2012 TILTECO, INC

TILTECO INC.
TILLIT TESTING & ENGINEERING COMPANY
8355 N.W. 36th. St., Ste. 305, VIRGINIA GARDENS, FL 33166
Phone : (305)871-1530 - Fax : (305)871-1531
e-mail: tilteco@aol.com
EB-0006719
WALTER A. TILLIT Jr. P.E.
FLORIDA Lic. # 44167

WALTER A. TILLIT JR. LICENSE No. 44167 STATE OF FLORIDA PROFESSIONAL ENGINEER

P.E. SEAL/SIGNATURE/DATE

Approved as complying with the Florida Building Code
Date 05/30/13
NOA# 13-0118.05
Miami-Dade Product Control
By

MIAMI–DADE COUNTY

CORNER MULLION SPLICE DETAIL AT TWIN SPAN (PLAN), DRYGLAZED

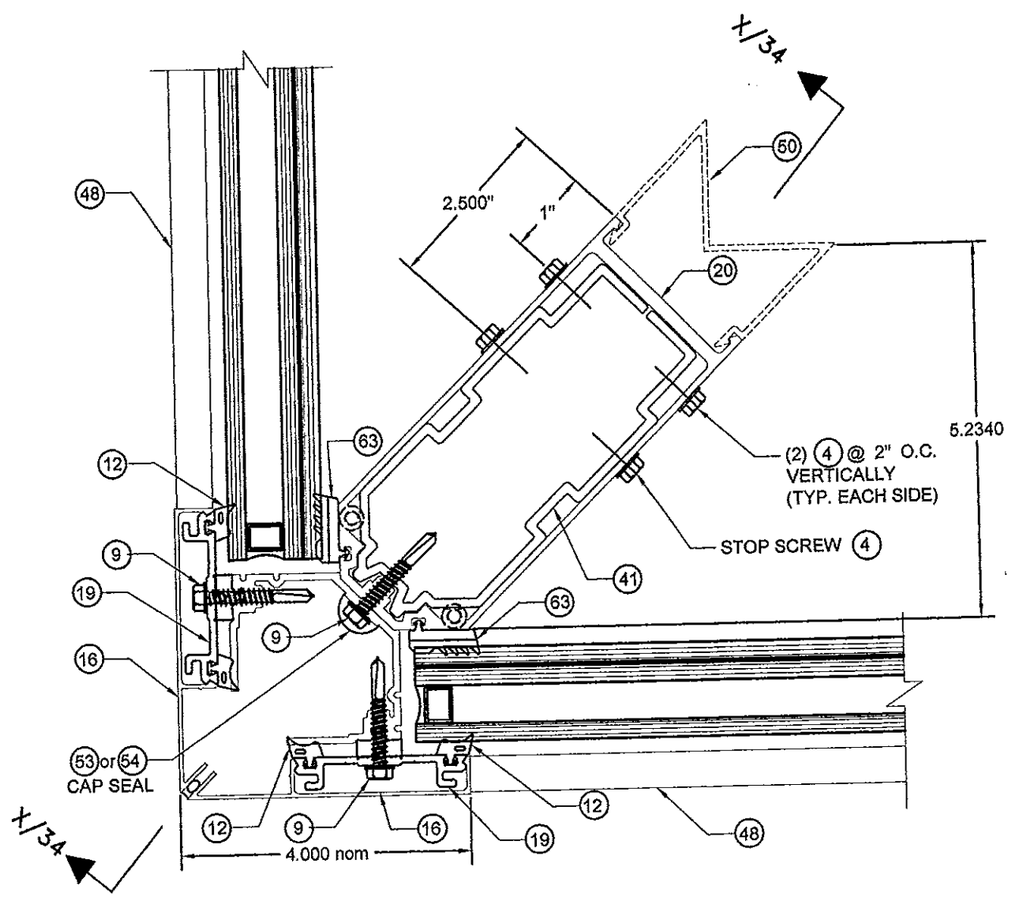

9D
CORNER MULLION SPLICE

FLORIDA BUILDING CODE (High Velocity Hurricane Zone)

RELIANCE STORMMAX CAPTURED CURTAIN WALL SYSTEM
LARGE MISSILE IMPACT INSULATED LAMINATED GLASS (DRYGLAZED)

Oldcastle BuildingEnvelope™
803 Airport Rd - Terrell, TX 75160
www.OldcastleBE.com - Phone 800-869-4567

REV. No	DESCRIPTION	DATE	REV. No	DESCRIPTION	DATE
1	-	-	3	-	-
2	-	-	4	-	-

A.G.
DRAWN BY:

10/12/12
DATE

12-154
DRAWING No

SHEET 33 OF 40

©2012 TILTECO, INC

TILTECO INC.
TILLIT TESTING & ENGINEERING COMPANY
6355 N.W. 36th St., Ste. 305, VIRGINIA GARDENS, FL 33166
Phone : (305)871-1530 , Fax : (305)871-1531
E-mail: tilteco@aol.com
EB-0006719
WALTER A. TILLIT Jr. P.E.
FLORIDA Lic. # 44167

WALTER A. TILLIT JR.
LICENSE
No. 44167
STATE OF FLORIDA
PROFESSIONAL ENGINEER

P.E. SEAL/SIGNATURE/DATE

Approved as complying with the Florida Building Code
Date
NOA# 13-0118.03
Miami-Dade Product Control
By

MIAMI-DADE COUNTY

CORNER MULLION SPLICE SECTION AT TWIN SPAN, DRYGLAZED

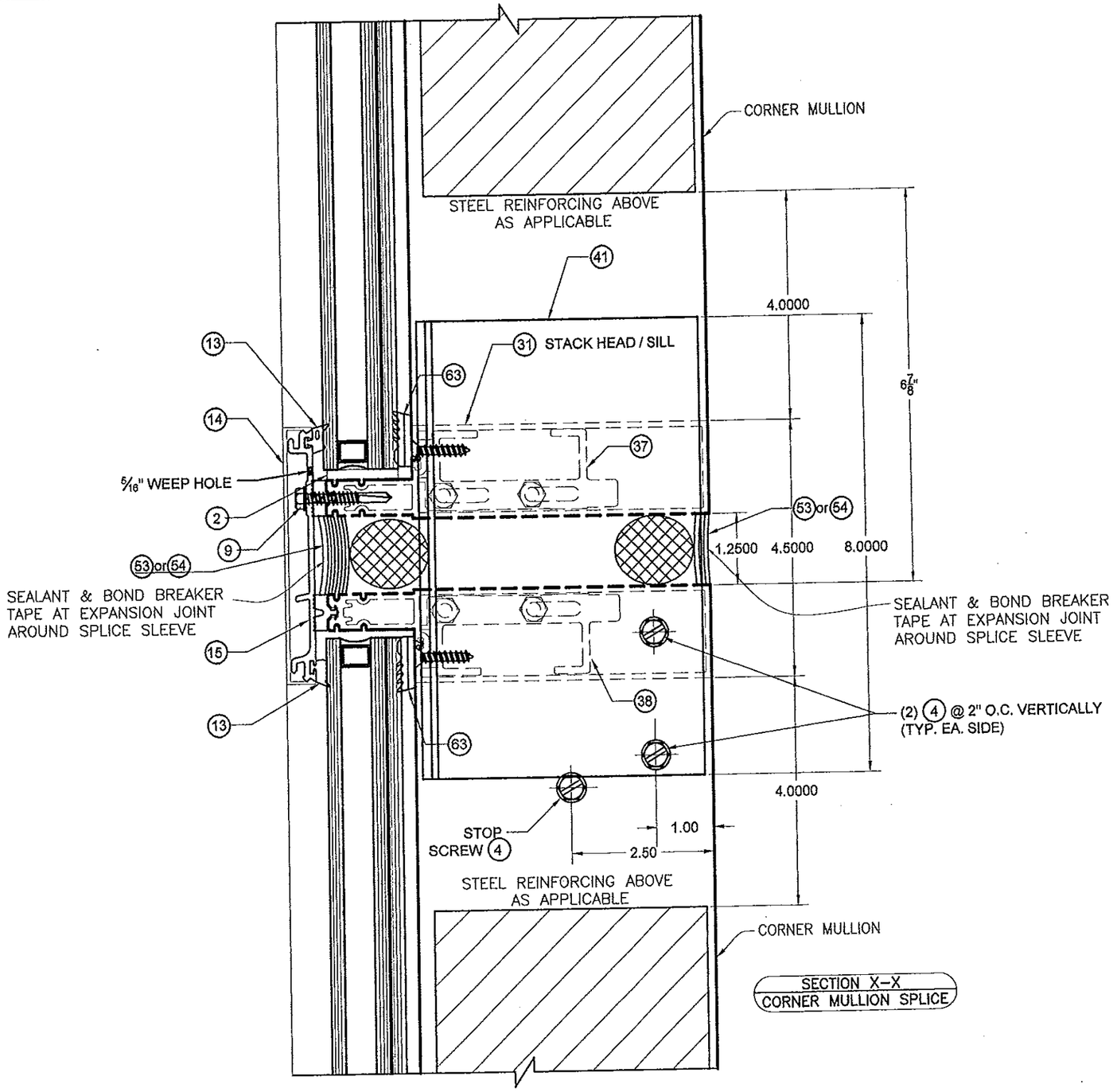

SECTION X–X
CORNER MULLION SPLICE

FLORIDA BUILDING CODE (High Velocity Hurricane Zone)

©2012 TILTECO, INC

RELIANCE STORMMAX CAPTURED CURTAIN WALL SYSTEM
LARGE MISSILE IMPACT INSULATED LAMINATED GLASS (DRYGLAZED)

Oldcastle BuildingEnvelope™
803 Airport Rd - Terrell, TX 75160
www.OldcastleBE.com - Phone 800-869-4567

REV. No	DESCRIPTION	DATE	REV. No	DESCRIPTION	DATE
1	-	-	3	-	-
2	-	-	4	-	-

A.G.
DRAWN BY:

10/12/12
DATE

12–154
DRAWING No

SHEET 34 OF 40

TILTECO INC.
TILLIT TESTING & ENGINEERING COMPANY
6335 N.W. 36th St., Ste. 305, VIRGINIA GARDENS, FL 33166
Phone : (305)871-1530 , Fax : (305)871-1531
e-mail: tilteco@aol.com
EB-0006719
WALTER A. TILLIT Jr. P.E.
FLORIDA Lic. # 44167

WALTER A. TILLIT JR. LICENSE No. 44167 STATE OF FLORIDA PROFESSIONAL ENGINEER

P.E. SEAL/SIGNATURE/DATE

Approved as complying with the Florida Building Code
Date
NOA# 13-0319.03
Miami Dade Product Control
By

MIAMI–DADE COUNTY

DOOR HEADER CONNECTION TO CURTAIN WALL HORIZONTALS

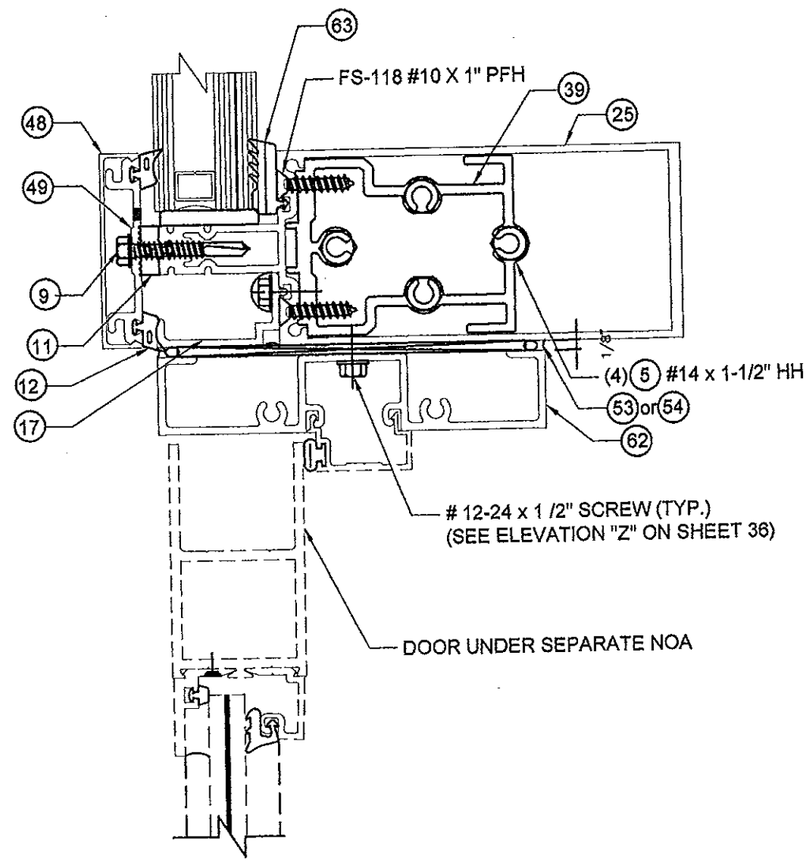

10

DOOR HEADER

FLORIDA BUILDING CODE (High Velocity Hurricane Zone)

©2012 TILTECO, INC

TILTECO INC.
TILLIT TESTING & ENGINEERING COMPANY
6555 N.W. 36th St. Ste. 305, VIRGINIA GARDENS, FL 33166
Phone : (305)871-1530 . Fax : (305)871-1531
e-mail: tilteco@aol.com
EB-0006719
WALTER A. TILLIT Jr. P.E.
FLORIDA Lic. # 44167

RELIANCE STORMMAX CAPTURED CURTAIN WALL SYSTEM
LARGE MISSILE IMPACT INSULATED LAMINATED GLASS (DRYGLAZED)

Oldcastle BuildingEnvelope™
803 Airport Rd - Terrell, TX 75160
www.OldcastleBE.com - Phone 800-869-4567

REV. No	DESCRIPTION	DATE	REV. No	DESCRIPTION	DATE
1	-	-	3	-	-
2	-	-	4	-	-

A.G.
DRAWN BY:

10/12/12
DATE

12-154
DRAWING No

SHEET 35 OF 40

WALTER A. TILLIT JR.
LICENSE
No. 44167
STATE OF FLORIDA
PROFESSIONAL ENGINEER

P.E. SEAL/SIGNATURE/DATE

Approved as complying with the Florida Building Code
Date 05/30/2013
NOA# 13-0516.03
Miami-Dade Product Control

MIAMI-DADE COUNTY

DOOR JAMBS CONNECTION TO CURTAIN WALL

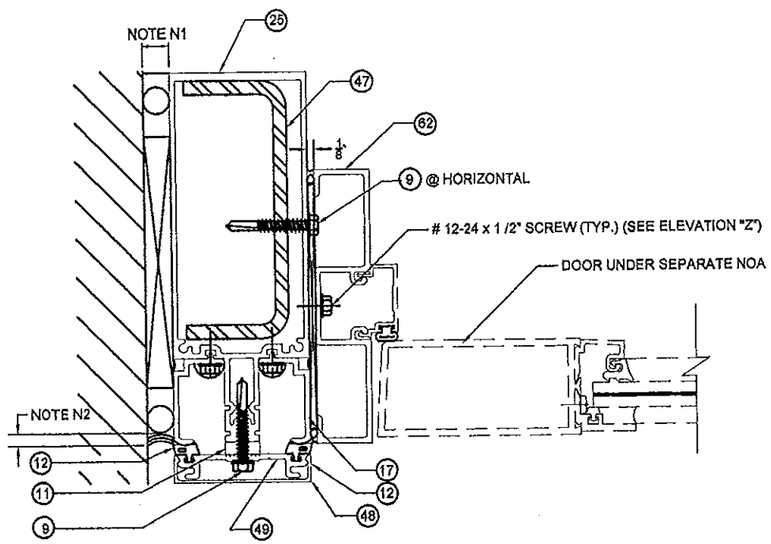

JAMB MULLION ANCHORING DETAILS NON SIDELITE AT EXISTING STRUCTURE

11

JAMB MULLION W/ NON SIDELITE CONDITION

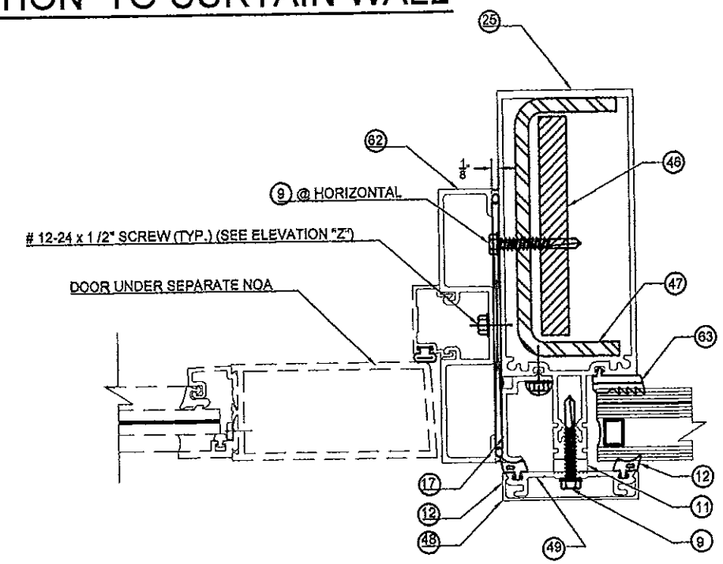

DOOR JAMB MULLION ANCHORING DETAILS WITH SIDELITE AT CURTAIN WALL

12

DOOR JAMB MULLION AT CURTAIN WALL

SEALANT JOINT NOTES *

N1 : 5/8" MIN. & 1 5/8" MAX. WIDE JOINT W/ SEALANT (53) OR (54)

N2 : 1/4" MIN. & 3/8" MAX. DEPTH JOINT W/ 1/4" DEPTH AT MIDWIDTH OF JOINT W/ SEALANT (53) OR (54)

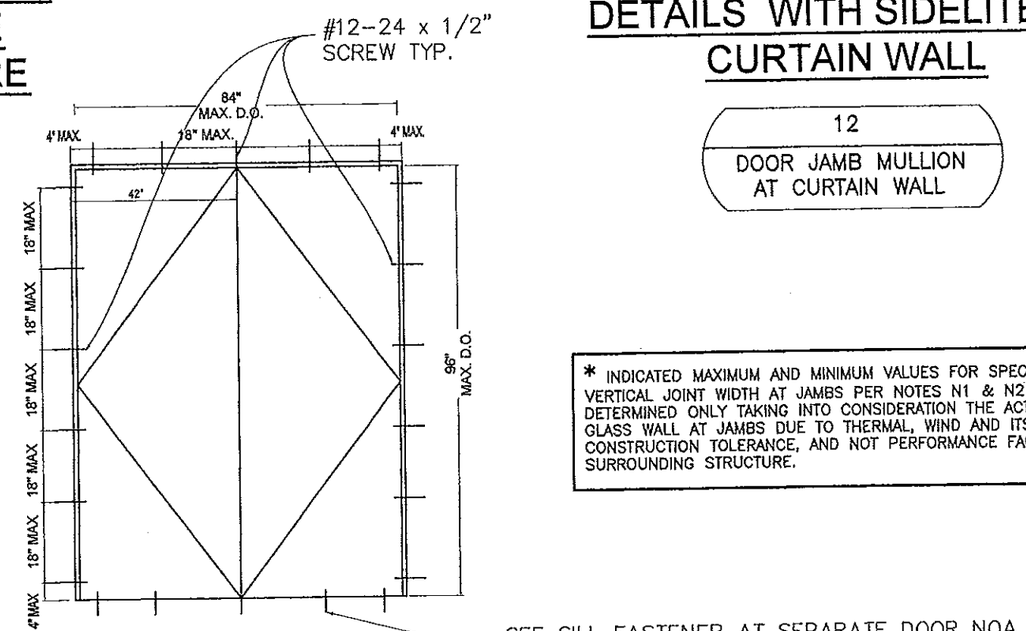

ELEVATION Z

* INDICATED MAXIMUM AND MINIMUM VALUES FOR SPECIFIED SEALANT VERTICAL JOINT WIDTH AT JAMBS PER NOTES N1 & N2 HAVE BEEN DETERMINED ONLY TAKING INTO CONSIDERATION THE ACTUAL MOVEMENT OF GLASS WALL AT JAMBS DUE TO THERMAL, WIND AND ITS OWN CONSTRUCTION TOLERANCE, AND NOT PERFORMANCE FACTORS FROM THE SURROUNDING STRUCTURE.

LOCATIONS FOR DOOR FRAME ATTACHMENTS
ABOVE DIMENSIONS ARE MAXIMUM SIZES TESTED

FLORIDA BUILDING CODE (High Velocity Hurricane Zone)

©2012 TILTECO, INC

TILTECO INC.
TILLIT TESTING & ENGINEERING COMPANY
8355 N.W. 36th. St., Ste. 305, VIRGINIA GARDENS, FL 33166
Phone : (305)871-1530 . Fax : (305)871-1531
e-mail: tilteco@aol.com
EB-0006719
WALTER A. TILLIT Jr. P.E.
FLORIDA Lic. # 44167

A.G.
DRAWN BY:

10/12/12
DATE

12-154
DRAWING No

SHEET 36 OF 40

RELIANCE STORMMAX CAPTURED CURTAIN WALL SYSTEM
LARGE MISSILE IMPACT INSULATED LAMINATED GLASS (DRYGLAZED)

Oldcastle BuildingEnvelope™
803 Airport Rd - Terrell, TX 75160
www.OldcastleBE.com - Phone 800-869-4567

REV. No	DESCRIPTION	DATE	REV. No	DESCRIPTION	DATE
1	MDC COMMENTS	05/07/13	3		
2			4		

WALTER A. TILLIT JR. LICENSE No. 44167 STATE OF FLORIDA PROFESSIONAL ENGINEER

P.E. SEAL/SIGNATURE/DATE

Approved as complying with the Florida Building Code
Date 03/08/13
NOA# 13-0108.05
Miami-Dade Product Control
By:

MIAMI-DADE COUNTY

SILL CONNECTION FOR JAMB MULLION AT NON SIDELITE & FOR DOOR JAMB MULLION FOR DOORS INSTALLED AT EXISTING STRUCTURE OR ADJACENT TO CURTAIN WALL

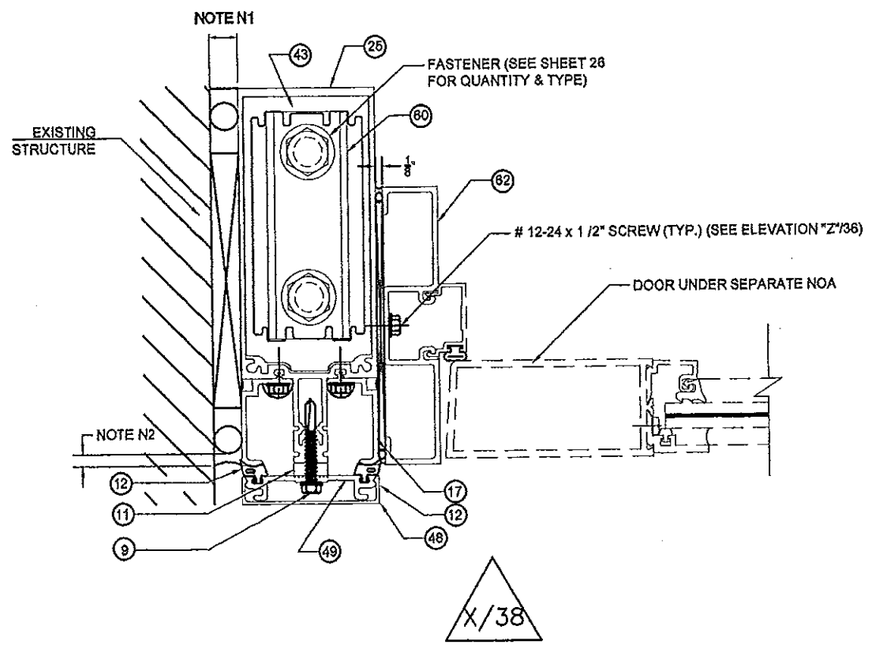

JAMB MULLION ANCHORING DETAILS NON SIDELITE AT EXISTING STRUCTURE

13

JAMB MULLION W/ NON SIDELITE CONDITION

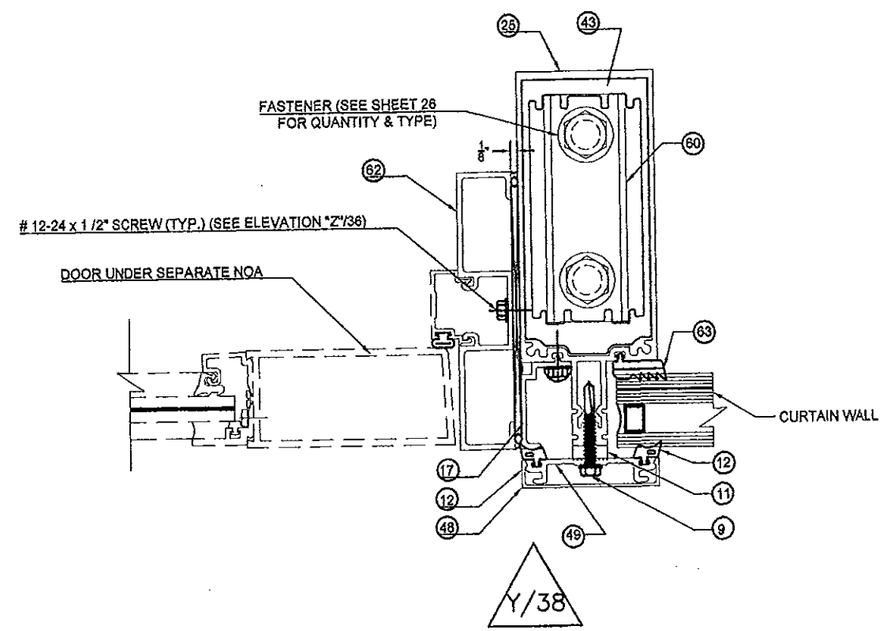

DOOR JAMB MULLION ANCHORING DETAILS WITH SIDELITE AT CURTAIN WALL

14

DOOR JAMB MULLION AT CURTAIN WALL

SEALANT JOINT NOTES

N1 : 5/8" MIN. & 1 5/8" MAX. WIDE JOINT W/ SEALANT (53) OR (54)

N2 : 1/4" MIN. & 3/8" MAX. DEPTH JOINT W/ 1/4" DEPTH AT MIDWIDTH OF JOINT W/ SEALANT (53) OR (54)

FLORIDA BUILDING CODE (High Velocity Hurricane Zone)

RELIANCE STORMMAX CAPTURED CURTAIN WALL SYSTEM
LARGE MISSILE IMPACT INSULATED LAMINATED GLASS (DRYGLAZED)

Oldcastle BuildingEnvelope™
803 Airport Rd - Terrell, TX 75160
www.OldcastleBE.com - Phone 800-869-4567

REV. No.	DESCRIPTION	DATE	REV. No.	DESCRIPTION	DATE
1	-	-	3	-	-
2	-	-	4	-	-

A.G. DRAWN BY:
10/12/12 DATE
12-154 DRAWING No
SHEET 37 OF 40

©2012 TILTECO, INC

TILTECO INC.
TILLIT TESTING & ENGINEERING COMPANY
6355 N.W. 36th St., Ste. 305, VIRGINIA GARDENS, FL 33166
Phone : (305)871-5300 Fax : (305)871-1531
e-mail: tiltecoe@aol.com
EB-0006719
WALTER A. TILLIT Jr. P.E.
FLORIDA Lic. # 44167

WALTER A. TILLIT JR. LICENSE NO. 44167 STATE OF FLORIDA PROFESSIONAL ENGINEER

P.E. SEAL/SIGNATURE/DATE

Approved as complying with the Florida Building Code
Date 03/02/2013
NOA# 13-0116.03
Miami-Dade Product Control
By

MIAMI-DADE COUNTY

SILL CONNECTION FOR JAMB MULLION (NON SIDELITE) & DOOR JAMB MULLION FOR DOORS INSTALLED AT EXISTING STRUCTURE OR ADJACENT TO CURTAIN WALL

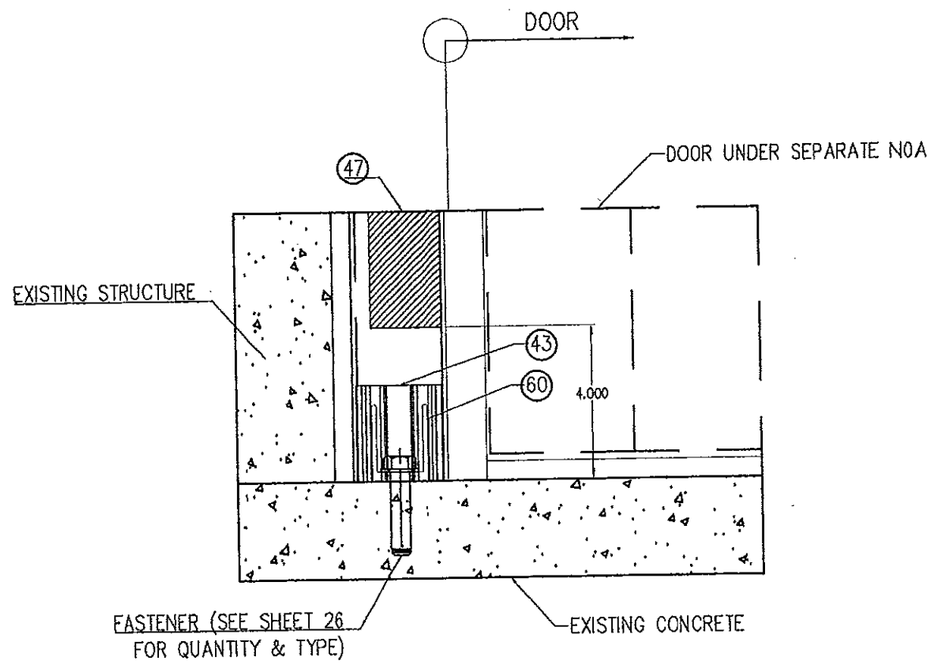

JAMB MULLION ANCHORING DETAIL AT NON SIDELITE CONDITION

ELEVATION X-X

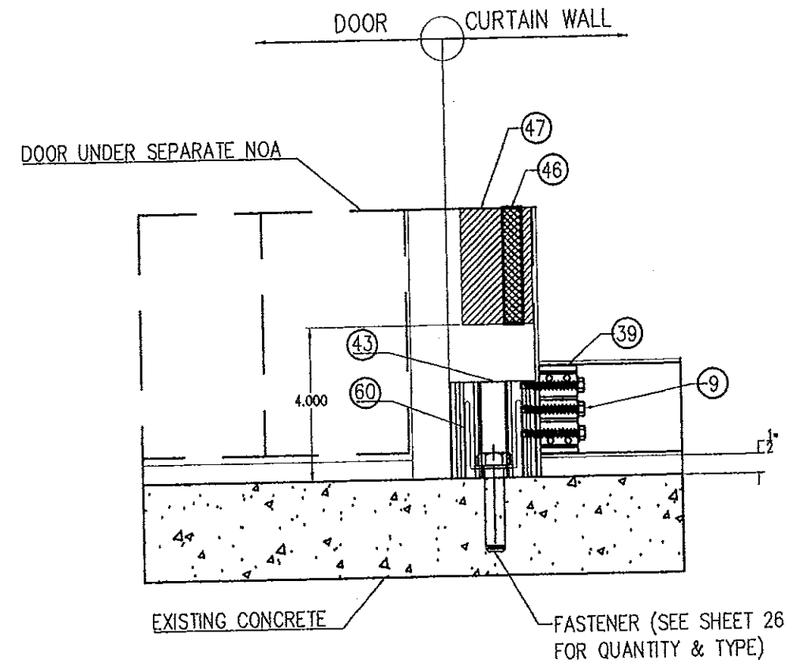

DOOR JAMB MULLION ANCHORING DETAIL WITH SIDELITE CONDITION

ELEVATION Y-Y

FLORIDA BUILDING CODE (High Velocity Hurricane Zone)

©2012 TILTECO, INC

TILTECO INC.
TILLIT TESTING & ENGINEERING COMPANY
6355 N.W. 36th. St., Ste. 303, VIRGINIA GARDENS, FL. 33166
Phone : (305)871-1530, Fax : (305)871-1531
e-mail: tilteco@aol.com
EB-0006719
WALTER A. TILLIT Jr. P.E.
FLORIDA Lic. # 44167

RELIANCE STORMMAX CAPTURED CURTAIN WALL SYSTEM
LARGE MISSILE IMPACT INSULATED LAMINATED GLASS (DRYGLAZED)

Oldcastle BuildingEnvelope™
803 Airport Rd - Terrell, TX 75160
www.OldcastleBE.com - Phone 800-869-4567

REV. No.	DESCRIPTION	DATE	REV. No.	DESCRIPTION	DATE
1	-	-	3	-	-
2	-	-	4	-	-

A.G.
DRAWN BY:

10/12/12
DATE

12-154
DRAWING No

SHEET 38 OF 40

WALTER A. TILLIT JR. LICENSE No. 44167 STATE OF FLORIDA PROFESSIONAL ENGINEER

P.E. SEAL/SIGNATURE/DATE

Approved as complying with the Florida Building Code
Date 05/30/2013
NOA# 13-0510.05
Miami-Dade Product Control
By

MIAMI-DADE COUNTY

ZONE PLUG INSTALLATION

STEP 1

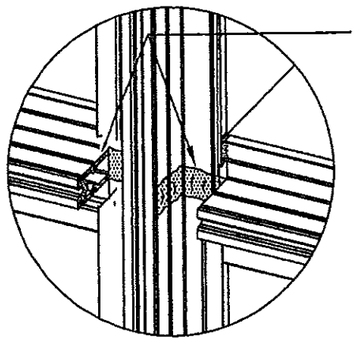

Seal along tongue of horizontal & across face and tongue of mullion before installing WW-352 zone plugs.

STEP 2

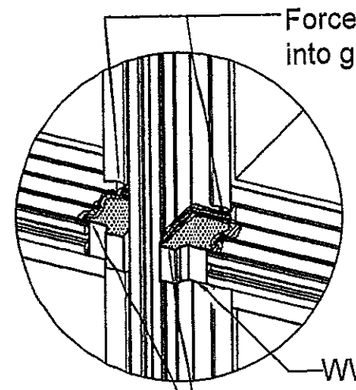

Force sealant into gasket race

WW-352 zone plug

Tool sealant along top of zone plug to form a water tight seal.

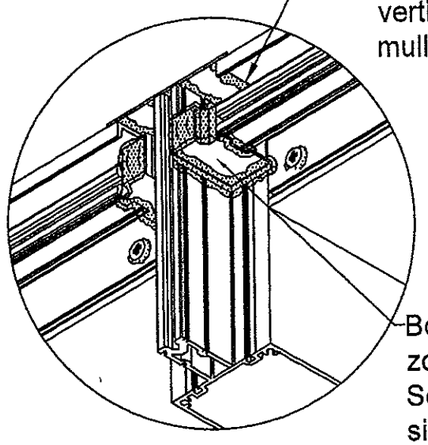

Seal between head, vertical mullion and mullion cap

Bottom side of zone plug shown. Seal top side similar.

ZONE PLUG AT HEAD

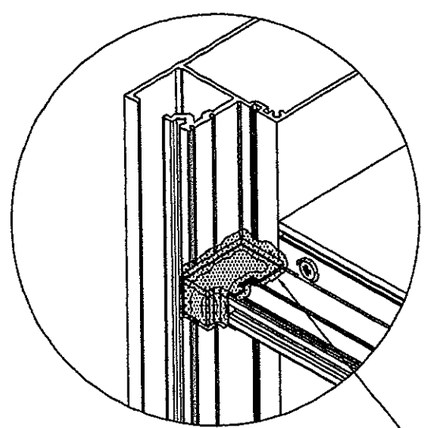

ZONE PLUG AT JAMB

Seal jamb & sill zone plugs same as shown at left

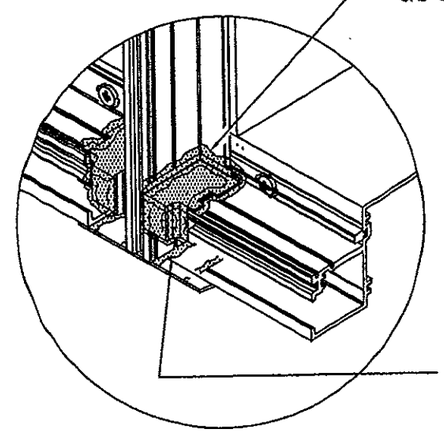

Seal jamb & sill zone plugs same as shown at left

ZONE PLUG AT SILL

Seal between sill, vertical & mullion cap

FLORIDA BUILDING CODE (High Velocity Hurricane Zone)

©2012 TILTECO, INC

TILTECO INC.
TILLIT TESTING & ENGINEERING COMPANY
6355 N.W. 36th St., Ste. 305, VIRGINIA GARDENS, FL 33166
Phone : (305)871-1530 . Fax : (305)871-1531
e-mail: tilteco@aol.com
EB-0006719
WALTER A. TILLIT Jr. P.E.
FLORIDA Lic. # 44167

RELIANCE STORMMAX CAPTURED CURTAIN WALL SYSTEM
LARGE MISSILE IMPACT INSULATED LAMINATED GLASS (DRYGLAZED)

Oldcastle BuildingEnvelope™
803 Airport Rd - Terrell, TX 75160
www.OldcastleBE.com - Phone 800-869-4567

REV. No	DESCRIPTION	DATE	REV. No	DESCRIPTION	DATE
1	-	-	3	-	-
2	-	-	4	-	-

A.G.
DRAWN BY:

10/12/12
DATE

12-154
DRAWING No

SHEET 39 OF 40

WALTER A. TILLIT JR. LICENSE No. 44167 STATE OF FLORIDA PROFESSIONAL ENGINEER

P.E. SEAL/SIGNATURE/DATE

Approved as complying with the Florida Building Code
Date
NOA# 13-0528.06
Miami-Dade Product Control
By:

MIAMI-DADE COUNTY

PRESSURE PLATE AND FACE CAP INSTALLATION

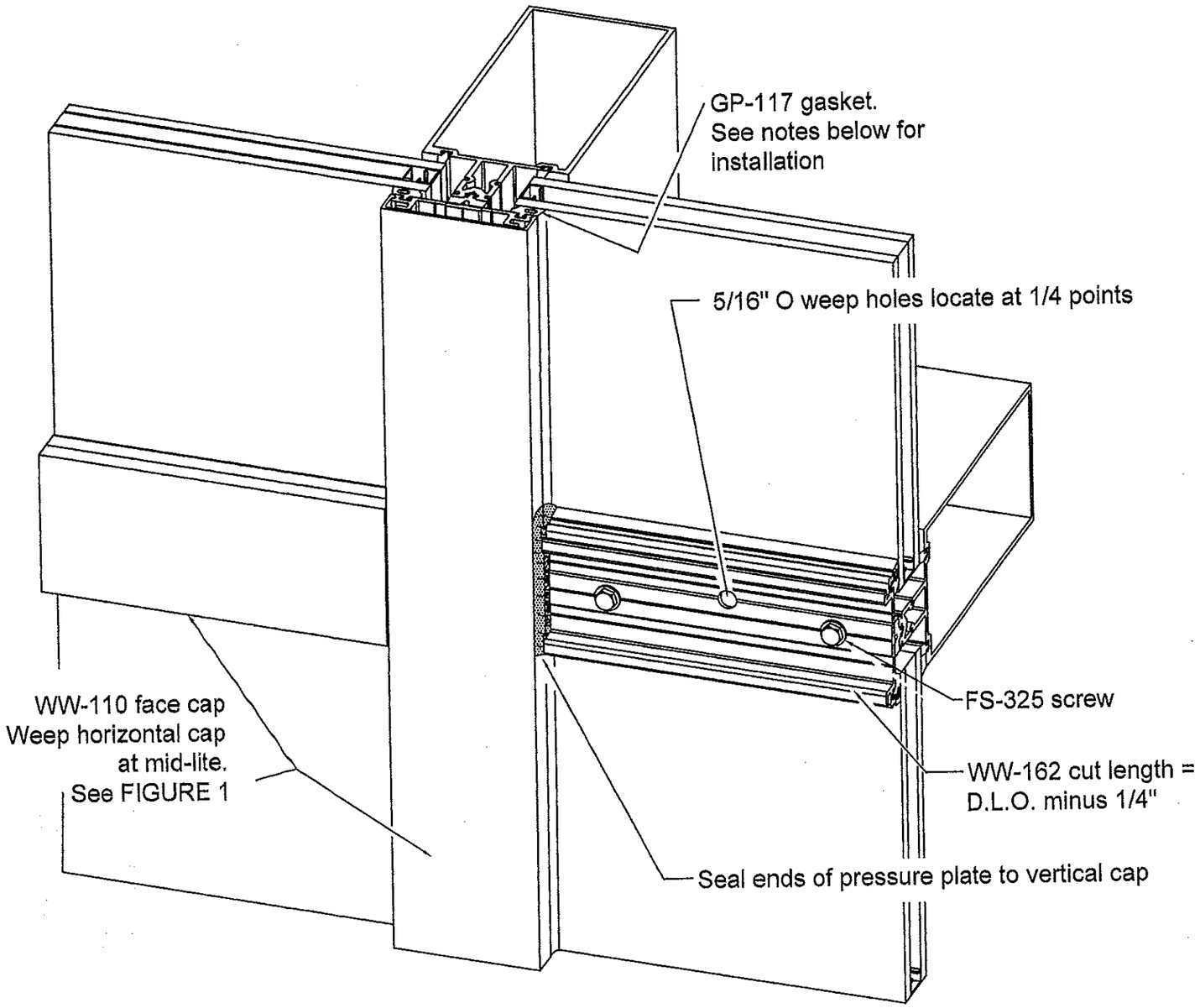

FIGURE 1
Glazing Instructions
Horizontal Face Cap Fabrication

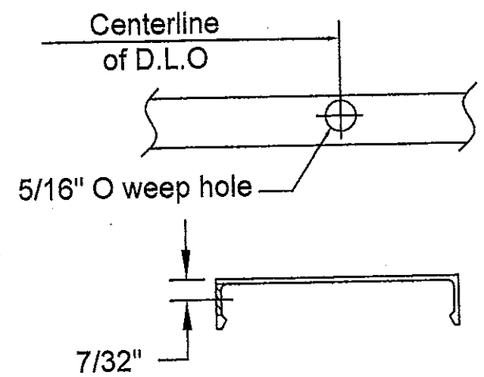

FLORIDA BUILDING CODE (High Velocity Hurricane Zone)

RELIANCE STORMMAX CAPTURED CURTAIN WALL SYSTEM
LARGE MISSILE IMPACT INSULATED LAMINATED GLASS (DRYGLAZED)

Oldcastle BuildingEnvelope™
803 Airport Rd - Terrell, TX 75160
www.OldcastleBE.com - Phone 800-869-4567

REV. No	DATE	DESCRIPTION
1	-	-
2	-	-
3	-	-
4	-	-

A.G.
DRAWN BY:

10/12/12
DATE

12-154
DRAWING No

SHEET 40 OF 40

©2012 TILTECO, INC

TILTECO INC.
TILLIT TESTING & ENGINEERING COMPANY
8355 N.W. 36th. St., Ste. 305, VIRGINIA GARDENS, FL 33166
Phone : (305)871-1530 , Fax : (305)871-1531
e-mail: tilteco@aol.com
EB-0006719
WALTER A. TILLIT Jr. P.E.
FLORIDA Lic. # 44167

WALTER A. TILLIT JR. LICENSE No. 44167 STATE OF FLORIDA PROFESSIONAL ENGINEER

P.E. SEAL/SIGNATURE/DATE

Approved as complying with the Florida Building Code
Date 05-30-13
NOA# 13-0516.03
Miami Dade Product Control
By

MIAMI-DADE COUNTY