MIAMI-DADE COUNTY
DEPARTMENT OF REGULATORY AND ECONOMIC RESOURCES (RER)
BOARD AND CODE ADMINISTRATION DIVISION

MIAMI-DADE COUNTY
PRODUCT CONTROL SECTION
11805 SW 26 Street, Room 208
T (786) 315-2590 F (786) 315-2599
www.miamidade.gov/economy

NOTICE OF ACCEPTANCE (NOA)

Pino's Window Corporation
6860 NW 75th Street
Medley, FL 33166

SCOPE:

This NOA is being issued under the applicable rules and regulations governing the use of construction materials. The documentation submitted has been reviewed and accepted by Miami-Dade County RER - Product Control Section to be used in Miami Dade County and other areas where allowed by the Authority Having Jurisdiction (AHJ).

This NOA shall not be valid after the expiration date stated below. The Miami-Dade County Product Control Section (In Miami Dade County) and/or the AHJ (in areas other than Miami Dade County) reserve the right to have this product or material tested for quality assurance purposes. If this product or material fails to perform in the accepted manner, the manufacturer will incur the expense of such testing and the AHJ may immediately revoke, modify, or suspend the use of such product or material within their jurisdiction. RER reserves the right to revoke this acceptance, if it is determined by Miami-Dade County Product Control Section that this product or material fails to meet the requirements of the applicable building code.

This product is approved as described herein, and has been designed to comply with the Florida Building Code, including the High Velocity Hurricane Zone.

DESCRIPTION: Series "FWS-200" Aluminum Single Hung Window – N.I.

APPROVAL DOCUMENT: Drawing No **W12-20**, titled "Series FWS-200 Alum Single Hung Wdw. (N.I.)", Sheets 1 through 5 of 5, dated 05/14/12, prepared by Al-Farooq Corporation, signed and sealed by Javad Ahmad, P.E., bearing the Miami-Dade County Product Control Approval stamp with the Notice of Acceptance number and approval date by the Miami-Dade County Product Control Section.

MISSILE IMPACT RATING: None

LABELING: Each unit shall bear a permanent label with the manufacturer's name or logo, city, state, model/series, and following statement: "Miami-Dade County Product Control Approved", unless otherwise noted herein.

RENEWAL of this NOA shall be considered after a renewal application has been filed and there has been no change in the applicable building code negatively affecting the performance of this product.

TERMINATION of this NOA will occur after the expiration date or if there has been a revision or change in the materials, use, and/or manufacture of the product or process. Misuse of this NOA as an endorsement of any product, for sales, advertising or any other purposes shall automatically terminate this NOA. Failure to comply with any section of this NOA shall be cause for termination and removal of NOA.

ADVERTISEMENT: The NOA number preceded by the words Miami-Dade County, Florida, and followed by the expiration date may be displayed in advertising literature. If any portion of the NOA is displayed, then it shall be done in its entirety.

INSPECTION: A copy of this entire NOA shall be provided to the user by the manufacturer or its distributors and shall be available for inspection at the job site at the request of the Building Official.

This NOA consists of this page 1 and evidence page E-1, as well as approval document mentioned above.

The submitted documentation was reviewed by **Manuel Perez, P.E.**

MIAMI-DADE COUNTY APPROVED

5/2/13

Pino's Window Corporation

NOTICE OF ACCEPTANCE: EVIDENCE SUBMITTED

A. DRAWINGS

1. Manufacturer's die drawings and sections.
2. Drawing No **W12–20**, titled "Series FWS-200 Alum Single Hung Wdw. (N.I.)", Sheets 1 through 5 of 5, dated 05/14/12, prepared by Al–Farooq Corporation, signed and sealed by Javad Ahmad, P.E.

B. TESTS

1. Test reports on: 1) Air Infiltration Test, per FBC, TAS 202-94
   2) Uniform Static Air Pressure Test, Loading per FBC, TAS 20294
   3) Water Resistance Test, per FBC, TAS 202-94
   4) Forced Entry Test, per FBC 2411 3.2.1 and TAS 202-94

   along with marked–up drawings and installation diagram of an aluminum single hung window, prepared by Fenestration Testing Laboratory, Inc., Test Report No. **FTL–6670,** dated 03/21/12, signed and sealed by Marlin D. Brinson, P.E.

C. CALCULATIONS

1. Anchor verification calculations and structural analysis, complying with FBC–2010, prepared by Al–Farooq Corporation, dated 06/04/12, signed and sealed by Javad Ahmad, P.E.
2. Glazing complies with ASTM E1300-04

D. QUALITY ASSURANCE

1. Miami-Dade Department of Regulatory and Economic Resources (RER)

E. MATERIAL CERTIFICATIONS

1. None.

F. STATEMENTS

1. Statement letter of conformance, complying with FBC-2010, and of no financial interest, dated April 9, 2013, signed and sealed by Javad Ahmad, P.E.

G. OTHER

1. None.

Manuel Perez, P.E.
Product Control Examiner
NOA No. 13-0114.06
Expiration Date: May 09, 2018
Approval Date: May 09, 2013

WINDOWS NOT RATED FOR IMPACT.
INSTALLATION OF THIS PRODUCT IN THE HVHZ AREA REQUIRES THE USE OF APPROVED SHUTTERS OR EXTERNAL PROTECTION DEVICES COMPLYING WITH HVHZ REQUIREMENTS.

INSTALLATION OF THIS SYSTEM OUTSIDE THE HVHZ AREA SHALL MEET THE APPLICABLE REQUIREMENTS FOR WIND BORNE DEBRIS PROTECTION.

SERIES FWS-200
ALUMINUM SINGLE HUNG WINDOW

DESIGN LOAD RATINGS FOR THESE WINDOWS TO BE AS PER CHARTS SHOWN ON SHEET 2.

APPROVAL APPLIES TO SINGLE UNITS OR SIDE BY SIDE COMBINATIONS OF S.H./S.H. OR SINGLE HUNG WITH OTHER WINDOW TYPES IN MODULES OF TWO OR MORE WINDOWS USING MIAMI-DADE COUNTY APPROVED MULLIONS IN BETWEEN. LOWER DESIGN PRESSURE FROM WINDOWS OR MULLION APPROVAL WILL APPLY TO ENTIRE SYSTEM.

THIS PRODUCT HAS BEEN DESIGNED AND TESTED TO COMPLY WITH THE REQUIREMENTS OF THE FLORIDA BUILDING CODE INCLUDING HIGH VELOCITY HURRICANE ZONE (HVHZ).

WOOD BUCKS BY OTHERS, MUST BE ANCHORED PROPERLY TO TRANSFER LOADS TO THE STRUCTURE.

ANCHORS SHALL BE AS LISTED, SPACED AS SHOWN ON DETAILS, ANCHORS EMBEDMENT TO BASE MATERIAL SHALL BE BEYOND WALL DRESSING OR STUCCO.

ANCHORING OR LOADING CONDITIONS NOT SHOWN IN THESE DETAILS ARE NOT PART OF THIS APPROVAL.

A LOAD DURATION INCREASE IS USED IN DESIGN OF ANCHORS INTO WOOD ONLY.

MATERIALS INCLUDING BUT NOT LIMITED TO STEEL/METAL SCREWS, THAT COME INTO CONTACT WITH OTHER DISSIMILAR MATERIALS SHALL MEET THE REQUIREMENTS OF THE FLORIDA BLDG. CODE SECTION 2003.8.4.

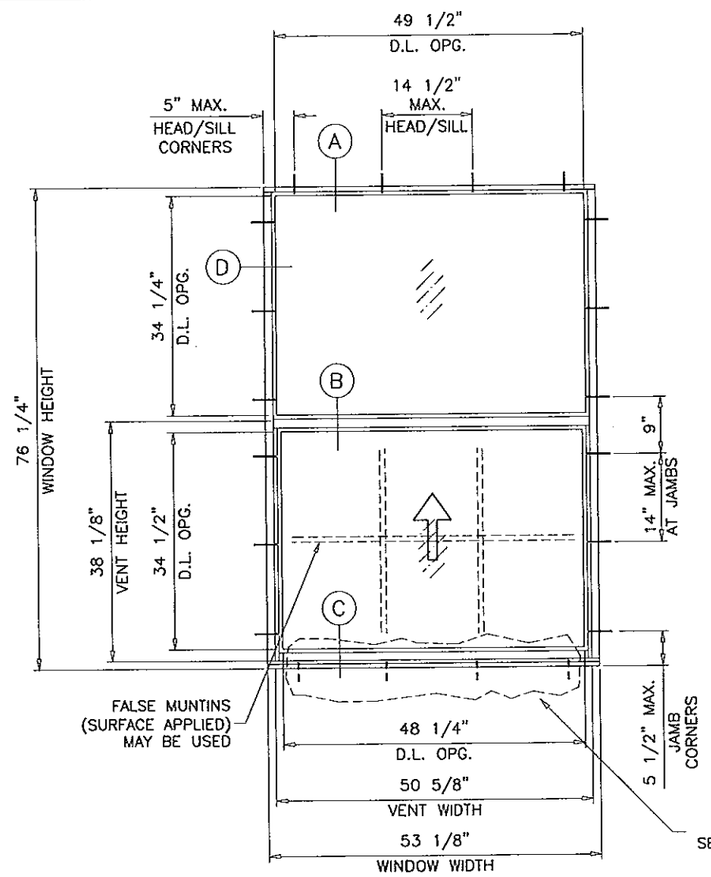

EQUAL LITES

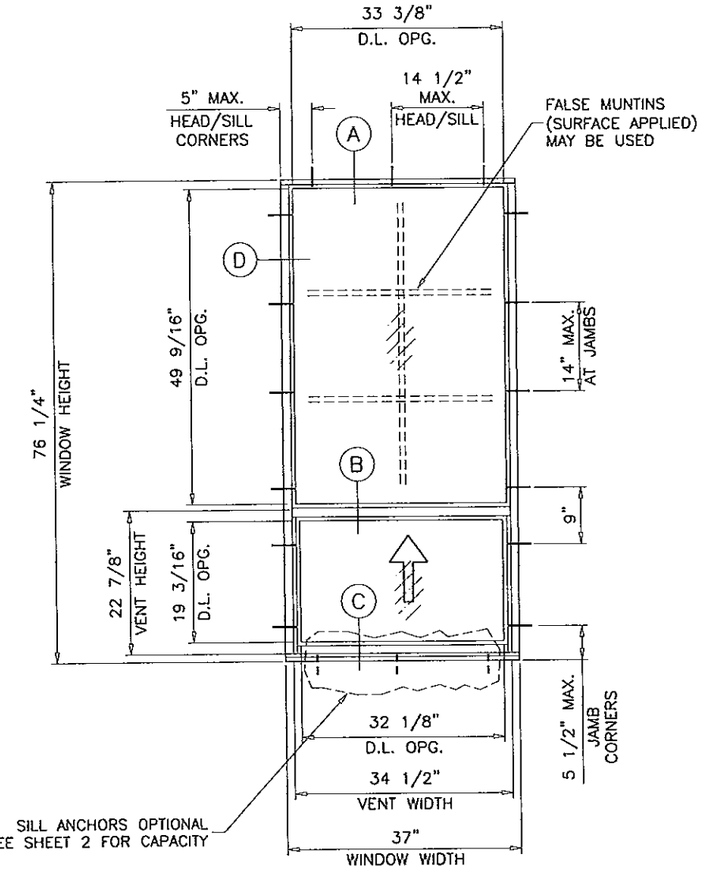

UNEQUAL LITES (ORIEL TYPE)
SEE CHART ON SHEET 2 FOR OTHER SIZES

TYPICAL ELEVATIONS

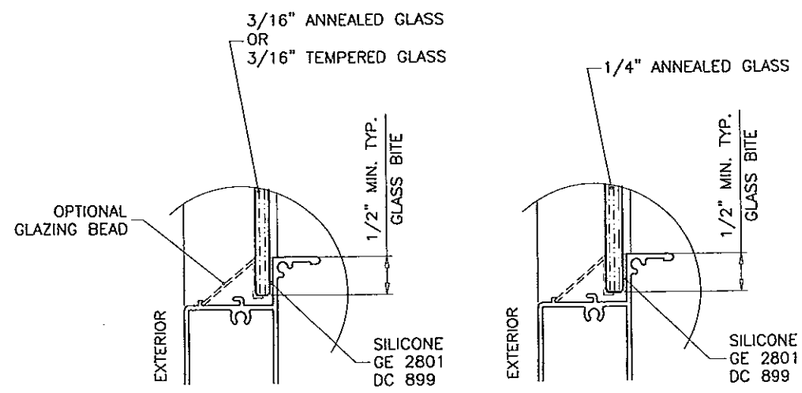

GLAZING OPTIONS

MONOLITHIC GLASS
NON IMPACT

Engr: JAVAD AHMAD
CIVIL
FLA. PE # 70592
C.A.N. 3538

MAY 03 2013

Approved as complying with the Florida Building Code
Date May 9, 2013
NOA# 13-0114.06
Miami Dade Product Control
By Manuel Sera

AL-FAROOQ CORPORATION
ENGINEERS & PRODUCT DEVELOPMENT
1235 S.W. 87 AVE
MIAMI, FLORIDA 33174
TEL (305) 264-8100 FAX. (305) 262-6978
COMP-ANL\W12-20PWC

SERIES FWS-200 ALUM SINGLE HUNG WDW. (N.I.)

PINO'S WINDOW CORP.
6860 N.W. 75TH STREET
MEDLEY, FL. 33166
TEL. (305) 888-9946 FAX (305) 888-8079

revisions:

no	date	by	description

date: 05-14-12
scale: 1/2" = 1"
dr. by: HAMID
chk. by:

drawing no.
W12-20

EQUAL LITES WINDOWS
DESIGN LOAD CAPACITY -- PSF

WINDOW DIMS.		WINDOWS WITHOUT SILL ANCHORS						WINDOWS WITH SILL ANCHORS					
		3/16" ANN. GLASS		1/4" ANN. GLASS		3/16" TEMP. GLASS		3/16" ANN. GLASS		1/4" ANN. GLASS		3/16" TEMP. GLASS	
WIDTH	HEIGHT	EXT.(+)	INT.(-)	EXT.(+)	INT.(-)	EXT.(+)	INT.(-)	EXT.(+)	INT.(-)	EXT.(+)	INT.(-)	EXT.(+)	INT.(-)
19-1/8"	26" (3)	66.7	125.0	66.7	125.0	66.7	125.0	66.7	125.0	66.7	125.0	66.7	125.0
26-1/2"		66.7	125.0	66.7	125.0	66.7	125.0	66.7	125.0	66.7	125.0	66.7	125.0
32"		66.7	125.0	66.7	125.0	66.7	125.0	66.7	125.0	66.7	125.0	66.7	125.0
37"		66.7	125.0	66.7	125.0	66.7	125.0	66.7	125.0	66.7	125.0	66.7	125.0
42"		66.7	119.2	66.7	119.2	66.7	119.2	66.7	125.0	66.7	125.0	66.7	125.0
48"		66.7	104.3	66.7	104.3	66.7	104.3	66.7	125.0	66.7	125.0	66.7	125.0
53-1/8"		66.7	94.3	66.7	94.3	66.7	94.3	66.7	117.8	66.7	125.0	66.7	125.0
19-1/8"	38-3/8" (4)	66.7	125.0	66.7	125.0	66.7	125.0	66.7	125.0	66.7	125.0	66.7	125.0
26-1/2"		66.7	125.0	66.7	125.0	66.7	125.0	66.7	125.0	66.7	125.0	66.7	125.0
32"		66.7	125.0	66.7	125.0	66.7	125.0	66.7	125.0	66.7	125.0	66.7	125.0
37"		66.7	122.3	66.7	122.3	66.7	122.3	66.7	125.0	66.7	125.0	66.7	125.0
42"		66.7	107.7	66.7	107.7	66.7	107.7	66.7	114.9	66.7	125.0	66.7	125.0
48"		66.7	94.2	66.7	94.2	66.7	94.2	66.7	96.9	66.7	123.4	66.7	125.0
53-1/8"		66.7	85.2	66.7	85.2	66.7	85.2	66.7	85.5	66.7	108.8	66.7	110.3
19-1/8"	50-5/8" (4)	66.7	125.0	66.7	125.0	66.7	125.0	66.7	125.0	66.7	125.0	66.7	125.0
26-1/2"		66.7	125.0	66.7	125.0	66.7	125.0	66.7	125.0	66.7	125.0	66.7	125.0
32"		66.7	107.2	66.7	107.2	66.7	107.2	66.7	125.0	66.7	125.0	66.7	125.0
37"		66.7	92.7	66.7	92.7	66.7	92.7	66.7	115.9	66.7	125.0	66.7	125.0
42"		66.7	81.6	66.7	81.6	66.7	81.6	66.7	96.2	66.7	122.4	66.7	125.0
48"		66.7	71.4	66.7	71.4	66.7	71.4	66.7	79.8	66.7	101.6	66.7	104.4
53-1/8"		64.6	64.6	64.6	64.6	64.6	64.6	66.7	69.7	66.7	88.7	66.7	90.3
19-1/8"	57" (6)	66.7	125.0	66.7	125.0	66.7	125.0	66.7	125.0	66.7	125.0	66.7	125.0
26-1/2"		66.7	125.0	66.7	125.0	66.7	125.0	66.7	125.0	66.7	125.0	66.7	125.0
32"		66.7	125.0	66.7	125.0	66.7	125.0	66.7	125.0	66.7	125.0	66.7	125.0
37"		66.7	107.5	66.7	123.5	66.7	123.5	66.7	107.5	66.7	125.0	66.7	125.0
42"		66.7	90.3	66.7	108.8	66.7	108.8	66.7	90.3	66.7	114.9	66.7	120.6
48"		66.7	74.3	66.7	94.5	66.7	95.2	66.7	74.3	66.7	94.5	66.7	97.5
53-1/8"		64.5	64.5	66.7	82.0	66.7	83.7	64.5	64.5	66.7	82.0	66.7	83.7
19-1/8"	63" (6)	66.7	125.0	66.7	125.0	66.7	125.0	66.7	125.0	66.7	125.0	66.7	125.0
26-1/2"		66.7	125.0	66.7	125.0	66.7	125.0	66.7	125.0	66.7	125.0	66.7	125.0
32"		66.7	111.2	66.7	125.0	66.7	125.0	66.7	111.2	66.7	125.0	66.7	125.0
37"		66.7	98.0	66.7	111.7	66.7	111.7	66.7	98.0	66.7	125.0	66.7	125.0
42"		66.7	85.6	66.7	98.4	66.7	98.4	66.7	85.6	66.7	109.9	66.7	116.0
48"		66.7	70.3	66.7	86.1	66.7	86.1	66.7	70.3	66.7	89.5	66.7	92.6
53-1/8"		60.7	60.7	66.7	77.2	66.7	77.8	60.7	60.7	66.7	77.2	66.7	79.0
19-1/8"	76-1/4" (6)	66.7	125.0	66.7	125.0	66.7	125.0	66.7	125.0	66.7	125.0	66.7	125.0
26-1/2"		66.7	110.6	66.7	125.0	66.7	125.0	66.7	110.6	66.7	125.0	66.7	125.0
32"		66.7	93.8	66.7	106.7	66.7	106.7	66.7	93.8	66.7	123.6	66.7	125.0
37"		66.7	80.8	66.7	92.3	66.7	92.3	66.7	80.8	66.7	105.1	66.7	121.9
42"		66.7	73.1	66.7	81.3	66.7	81.3	66.7	73.1	66.7	94.0	66.7	111.4
48"		64.7	64.7	66.7	71.2	66.7	71.2	64.7	64.7	66.7	82.4	66.7	86.1
53-1/8"		55.0	55.0	64.3	64.3	64.3	64.3	55.0	55.0	66.7	70.0	66.7	72.1

* NO. IN PARENTHESIS INDICATE NO. OF ANCHORS PER JAMB.

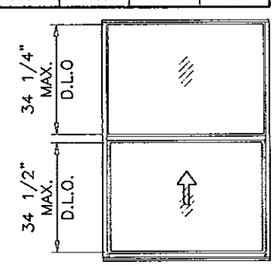

UNEQUAL LITES WINDOWS
DESIGN LOAD CAPACITY -- PSF

WINDOW DIMS.		WINDOWS WITHOUT SILL ANCHORS						WINDOWS WITH SILL ANCHORS					
		3/16" ANN. GLASS		1/4" ANN. GLASS		3/16" TEMP. GLASS		3/16" ANN. GLASS		1/4" ANN. GLASS		3/16" TEMP. GLASS	
WIDTH	HEIGHT	EXT.(+)	INT.(-)	EXT.(+)	INT.(-)	EXT.(+)	INT.(-)	EXT.(+)	INT.(-)	EXT.(+)	INT.(-)	EXT.(+)	INT.(-)
19-1/8"	50-5/8" (5)	66.7	125.0	66.7	125.0	66.7	125.0	66.7	125.0	66.7	125.0	66.7	125.0
26-1/2"		66.7	125.0	66.7	125.0	66.7	125.0	66.7	125.0	66.7	125.0	66.7	125.0
32"		66.7	111.5	66.7	125.0	66.7	125.0	66.7	111.5	66.7	125.0	66.7	125.0
37"		66.7	98.3	66.7	115.9	66.7	115.9	66.7	98.3	66.7	125.0	66.7	125.0
42"		66.7	85.8	66.7	102.1	66.7	102.1	66.7	85.8	66.7	113.7	66.7	125.0
48"		66.7	72.6	66.7	89.3	66.7	89.3	66.7	72.6	66.7	97.0	66.7	106.8
53-1/8"		63.2	63.2	66.7	80.7	66.7	80.7	63.2	63.2	66.7	85.6	66.7	92.1
19-1/8"	57" (5)	66.7	125.0	66.7	125.0	66.7	125.0	66.7	125.0	66.7	125.0	66.7	125.0
26-1/2"		66.7	111.7	66.7	125.0	66.7	125.0	66.7	111.7	66.7	125.0	66.7	125.0
32"		66.7	94.6	66.7	119.0	66.7	119.0	66.7	94.6	66.7	124.7	66.7	125.0
37"		66.7	81.3	66.7	102.9	66.7	102.9	66.7	81.3	66.7	105.9	66.7	125.0
42"		66.7	73.7	66.7	90.6	66.7	90.6	66.7	73.7	66.7	94.7	66.7	125.0
48"		65.2	65.2	66.7	79.3	66.7	79.3	65.2	65.2	66.7	83.2	66.7	102.5
53-1/8"		57.9	57.9	66.7	71.7	66.7	71.7	57.9	57.9	66.7	74.1	66.7	87.4
19-1/8"	63" (6)	66.7	125.0	66.7	125.0	66.7	125.0	66.7	125.0	66.7	125.0	66.7	125.0
26-1/2"		66.7	92.7	66.7	125.0	66.7	125.0	66.7	92.7	66.7	125.0	66.7	125.0
32"		66.7	80.6	66.7	106.5	66.7	125.0	66.7	80.6	66.7	106.5	66.7	125.0
37"		66.7	72.4	66.7	93.1	66.7	111.7	66.7	72.4	66.7	93.1	66.7	125.0
42"		64.1	64.1	66.7	81.5	66.7	98.4	64.1	64.1	66.7	81.5	66.7	125.0
48"		57.9	57.9	66.7	73.0	66.7	86.1	57.9	57.9	66.7	73.0	66.7	100.8
19-1/8"	76-1/4" (6)	66.7	125.0	66.7	125.0	66.7	125.0	66.7	125.0	66.7	125.0	66.7	125.0
26-1/2"		66.7	68.0	66.7	98.7	66.7	125.0	66.7	68.0	66.7	98.7	66.7	125.0
32"		56.7	56.7	66.7	76.9	66.7	106.7	56.7	56.7	66.7	76.9	66.7	125.0
37"		53.4	53.4	66.7	68.9	66.7	92.3	53.4	53.4	66.7	68.9	66.7	117.5

* NO. IN PARENTHESIS INDICATE NO. OF ANCHORS PER JAMB.

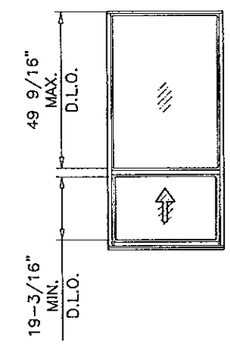

NOTE:
GLASS CAPACITIES ON THIS SHEET ARE BASED ON ASTM E1300-04 (3 SEC. GUSTS) AND FLORIDA BUILDING COMMISSION DECLARATORY STATEMENT DCA05-DEC-219

Engr: JAVAD AHMAD
CIVIL
FLA. PE # 70592
C.A.N. 3538

MAY 03 2013

Approved as complying with the Florida Building Code
Date May 9, 2013
NOA# 13-0114.06
Miami Dade Product Control
By Manuel Perez

AL-FAROOQ CORPORATION
ENGINEERS & PRODUCT DEVELOPMENT
1235 S.W. 87 AVE
MIAMI, FLORIDA 33174
TEL. (305) 264-8100 FAX. (305) 262-6978
COMP-ANL\W12-20PWC

SERIES FWS-200 ALUM SINGLE HUNG WDW. (N.I.)

PINO'S WINDOW CORP.
6860 N.W. 75TH STREET
MEDLEY, FL. 33166
TEL. (305) 888-9946 FAX (305) 888-8079

revisions:

no	date	by	description

date: 05-14-12
scale: 1/2" = 1"
dr. by: HAMID
chk. by:

drawing no.
W12-20

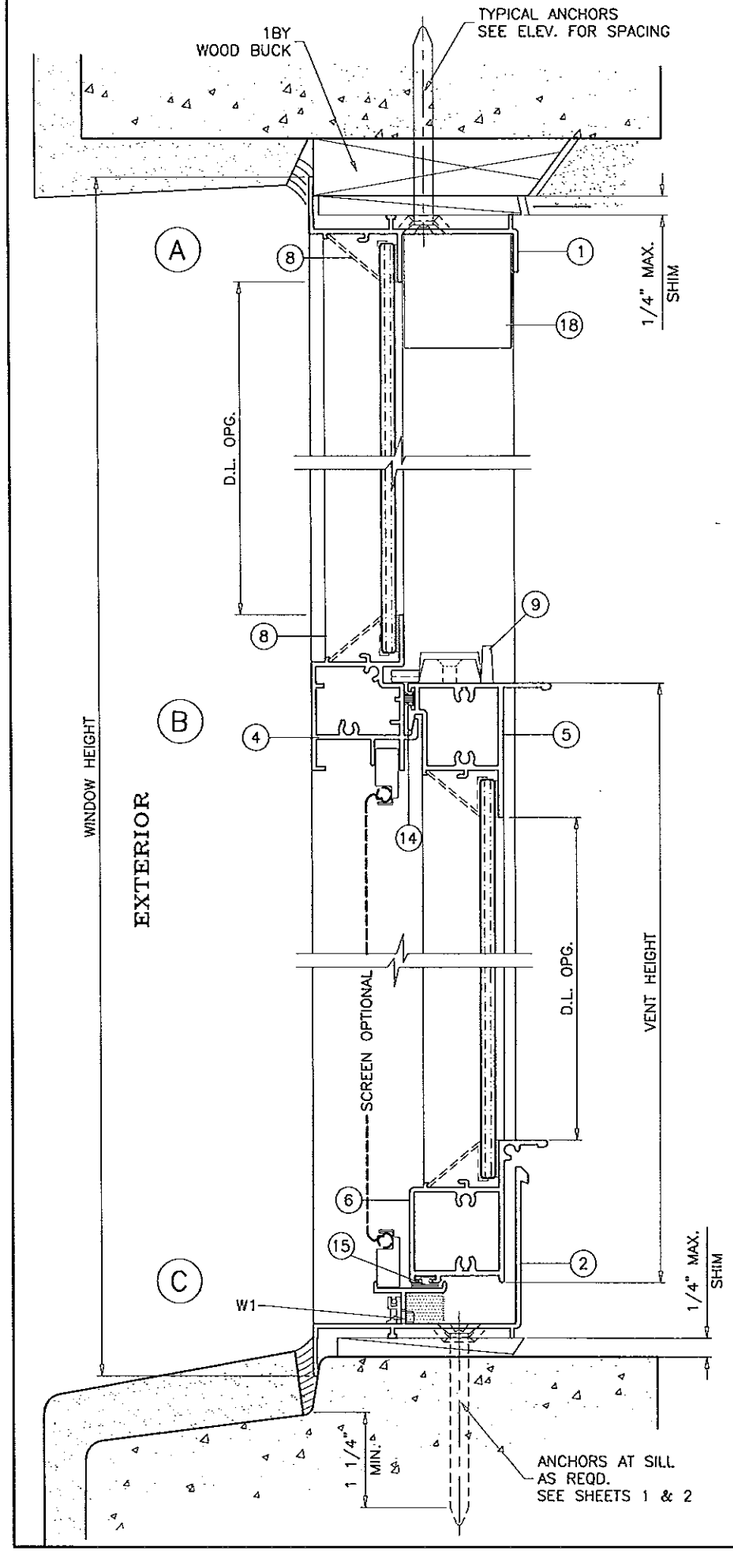

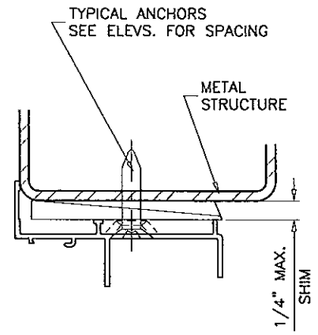

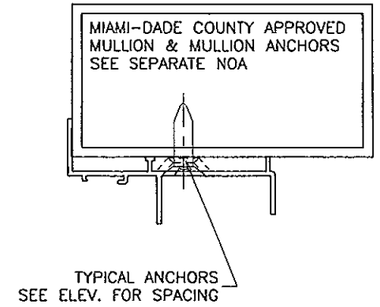

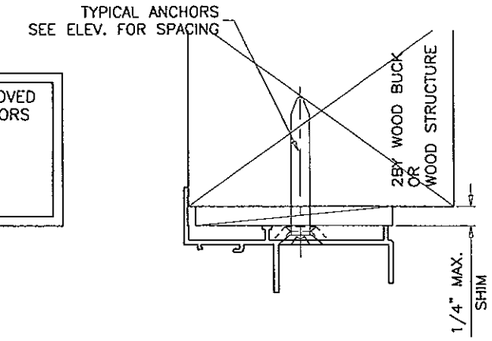

WOOD BUCKS AND METAL STRUCTURE NOT BY PINO WINDOWS MUST SUSTAIN LOADS IMPOSED BY GLAZING SYSTEM AND TRANSFER THEM TO THE BUILDING STRUCTURE.

TYPICAL ANCHORS: SEE ELEV. FOR SPACING

1/4" DIA. TAPCON BY 'ITW' (Fu=120 KSI, Fy=92 KSI)

1/4" DIA. ULTRACON BY 'ELCO' (Fu=177 KSI, Fy=155 KSI)

INTO 2BY WOOD BUCKS OR WOOD STRUCTURES
1-1/2" MIN. PENETRATION INTO WOOD

THRU 1BY BUCKS INTO CONC. OR MASONRY
1-1/4" MIN. EMBED INTO CONC. OR MASONRY

DIRECTLY INTO CONC. OR MASONRY
1-1/4" MIN. EMBED INTO CONC. OR MASONRY

#14 SMS OR SELF DRILLING SCREWS (GRADE 2 CRS)

INTO METAL STRUCTURES

STEEL : 12 GA. MIN. (Fy = 36 KSI MIN.)
ALUMINUM : 1/8" THK. MIN. (6063-T5 MIN.)
(STEEL IN CONTACT WITH ALUMINUM TO BE PLATED OR PAINTED)

#12 SMS OR SELF DRILLING SCREWS (GRADE 2 CRS)

INTO MIAMI-DADE COUNTY APPROVED MULLIONS (MIN. THK. = .090")
(NO SHIM SPACE)

TYPICAL EDGE DISTANCE

INTO CONCRETE AND MASONRY = 1-1/2" MIN.
INTO WOOD STRUCTURE = 1" MIN.
INTO METAL STRUCTURE = 3/4" MIN.

CONCRETE AT HEAD, SILL OR JAMBS f'c = 3000 PSI MIN.
C-90 HOLLOW/FILLED BLOCK AT JAMBS f'm = 2000 PSI MIN.

SEALANT:

ALL JOINTS AND FRAME CONNECTIONS SEALED WITH SCHNEE-MOREHEAD 5504 SEALANT.

WEEPHOLES:

W1 = 1-1/2" X 1/4" WEEPHOLES AT 3-1/2" FROM EACH END

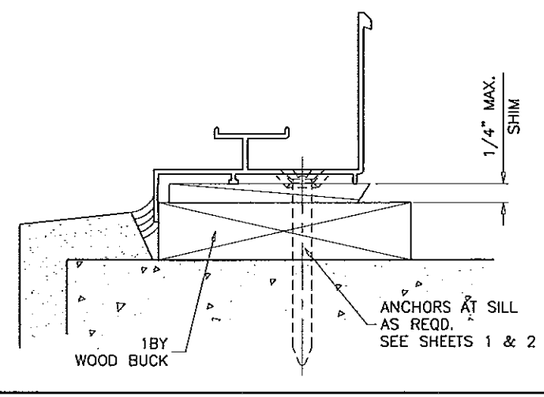

Engr: JAVAD AHMAD
CIVIL
FLA. PE # 70592
C.A.N. 3539

MAY 03 2013

Approved as complying with the Florida Building Code
Date May 9 2013
NOA# 13-0114.06
Miami Dade Product Control
By Manuel Cruz

AL-FAROOQ CORPORATION
ENGINEERS & PRODUCT DEVELOPMENT
1235 S.W. 87 AVE
MIAMI, FLORIDA 33174
TEL. (305) 264-3100 FAX. (305) 262-6978

COMP-ANL\W12-20PWC

SERIES FWS-200 ALUM SINGLE HUNG WDW. (N.I.)

PINO'S WINDOW CORP.
6860 N.W. 75TH STREET
MEDLEY, FL. 33166
TEL. (305) 888-9946 FAX. (305) 888-8079

revisions:			
no	date	by	description

date: 05-14-12
scale: 1/2" = 1"
dr. by: HAMID
chk. by:

drawing no.
W12-20

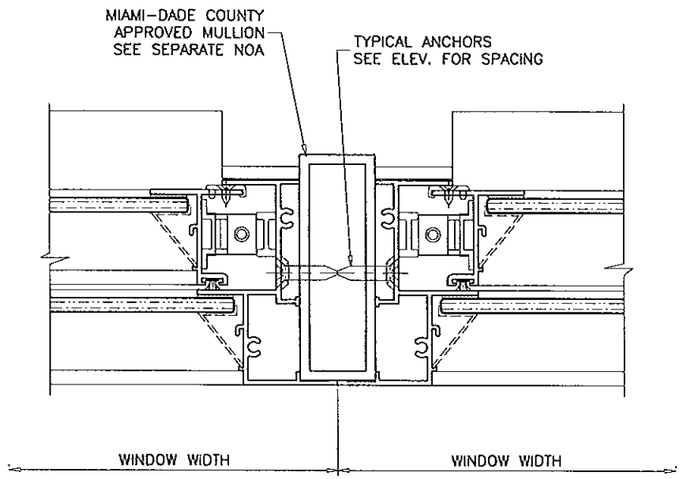

ITEM #	PART #	REQD.	DESCRIPTION	MATERIAL	MANF./SUPPLIER/REMARKS
1	FWS-020	1	FRAME HEAD	6063-T6	–
2	FWS-021	1	FRAME SILL	6063-T6	–
3	FWS-022	2	FRAME JAMB	6063-T6	–
4	FWS-025	1	FIXED MTG. RAIL	6063-T6	–
5	FWS-024	1	VENT TOP RAIL	6063-T6	–
6	FWS-023	1	VENT BOTTOM RAIL	6063-T6	–
7	FWS-016	2	VENT SIDE RAIL	6063-T6	–
8	–	AS REQD.	OPTIONAL GLAZING BEAD	ALUMINUM	ROLL FORMED
9	–	2/VENT	CAM TYPE SWEEP LOCK, AT 12" FROM ENDS	ZAMAK	INTALLED W/ (2) #6 X 3/4" PH SMS
10	–	–	–	–	–
11	895	AS REQD.	GLAZING COMPOUND	–	PECORA
12	#8 X 1-1/4"	2/ CORNER	FRAME & FIX. RAIL ASSEMBLY SCREWS	CRS	PH SMS
13	#8 X 3/4"	2/ CORNER	VENT ASSEMBLY SCREWS	CRS	PH SMS
14	W21175	AS REQD.	PILE W'STRIPPING WITH PLASTIC FIN	–	ULTRAFAB
15	E205	AS REQD.	BULB W'STRIPPING	SANTOPRENE	–
16	–	2/VENT	BLOCK AND TACKLE BALANCE		–
17	#6 X 3/8"	–	SASH GUIDE SCREWS	–	FH
18	20-09	2	SASH STOP	ALUMINUM	–
19	–	4	SASH GUIDE	–	–
20	–	1	5/16" BOX SCREEN	–	OPTIONAL

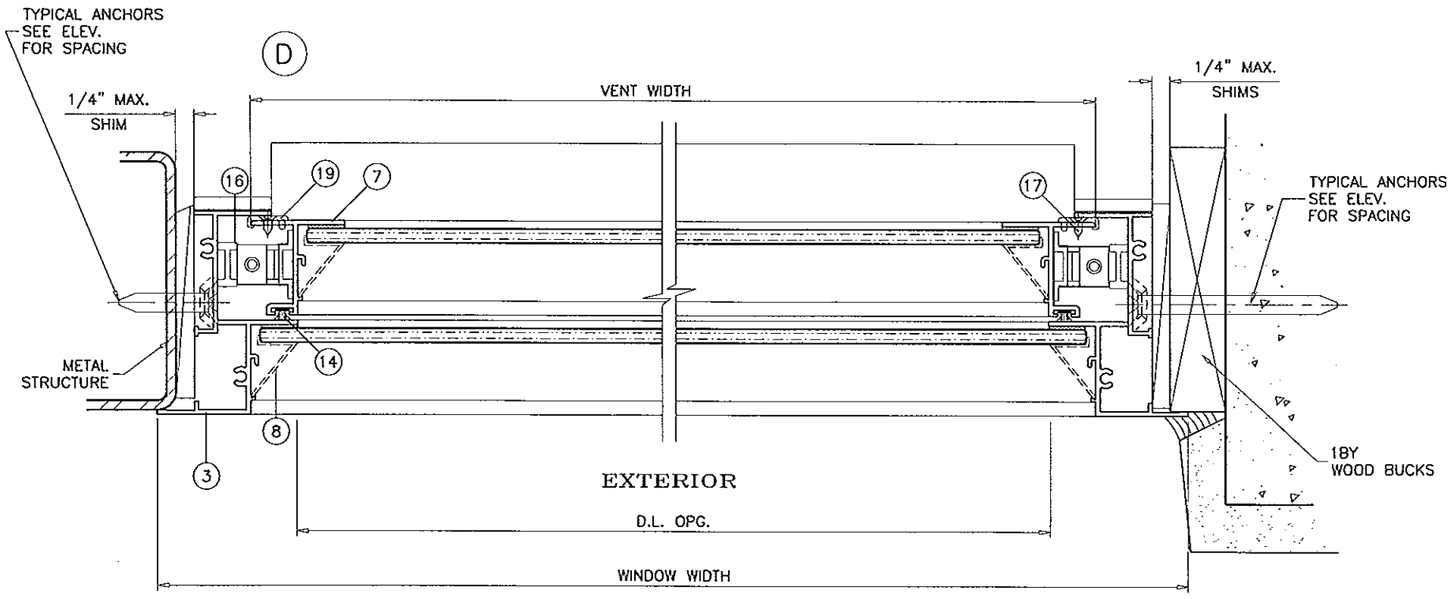

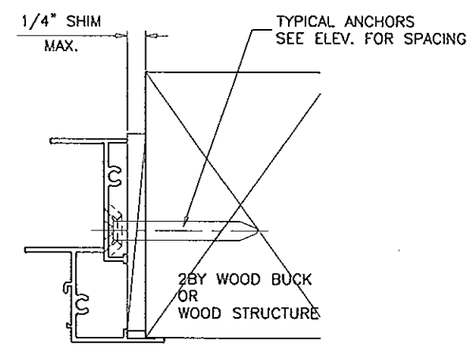

Engr: JAVAD AHMAD
CIVIL
FLA. PE # 70592
C.A.N. 3538

MAY 0 3 2013

Approved as complying with the
Florida Building Code
Date 4-29-2013
NOA# 13-0114.06
Miami Dade Product Control
By Manuel Perez

AL-FAROOQ CORPORATION
ENGINEERS & PRODUCT DEVELOPMENT
1235 S.W. 87 AVE
MIAMI, FLORIDA 33174
TEL. (305) 264-8100 FAX. (305) 262-6978

COMP-ANL\W12-20PWC

SERIES FWS-200 ALUM SINGLE HUNG WDW. (N.I.)

PINO'S WINDOW CORP.
6860 N.W. 75TH STREET
MEDLEY, FL. 33166
TEL. (305) 888-9946 FAX (305) 888-8079

revisions:

no.	date	by	description

date: 05-14-12
scale: 1/2" = 1"
dr. by: HAMID
chk. by:

drawing no.
W12-20

sheet 4 of 5

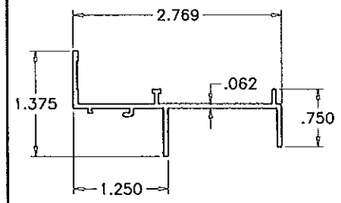

1 FRAME HEAD

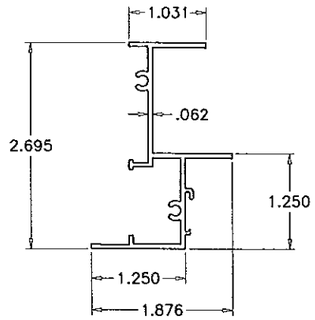

3 FRAME JAMB

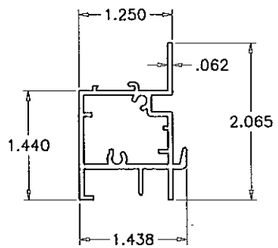

4 FIX. MEETING RAIL

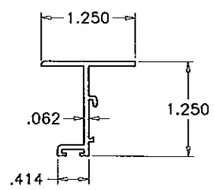

7 VENT SIDE RAIL

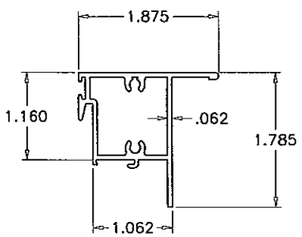

5 VENT TOP RAIL

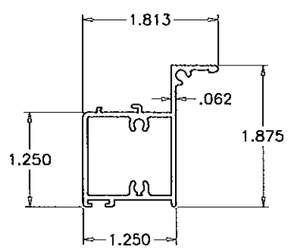

6 VENT BOTTOM RAIL

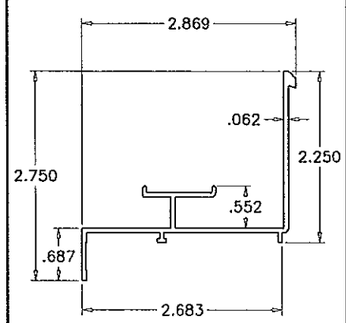

2 FRAME SILL

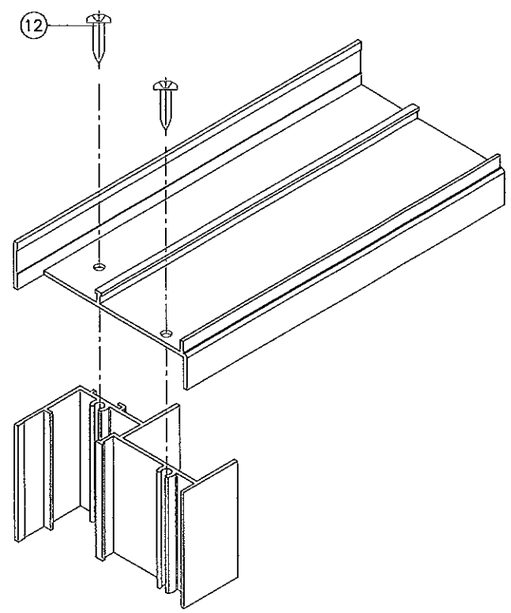

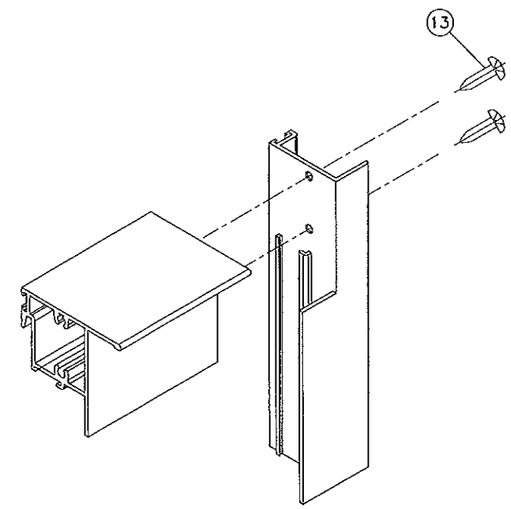

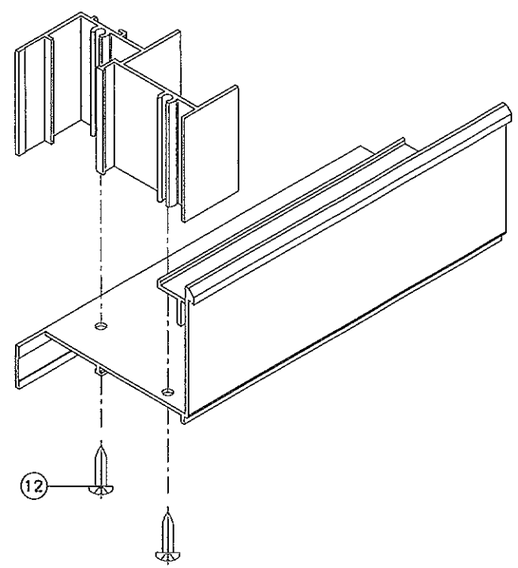

FRAME CORNERS DETAIL

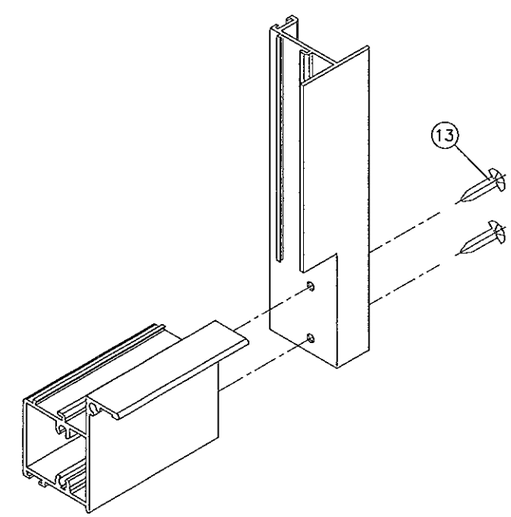

VENT CORNER DETAIL

Engr: JAVAD AHMAD
CIVIL
FLA. PE # 70592
C.A.N. 3538

MAY 03 2013

Approved as complying with the Florida Building Code
Date May 9 2013
NOA# 13-0114.06
Miami Dade Product Control
By Manuel Perez

AL-FAROOQ CORPORATION
ENGINEERS & PRODUCT DEVELOPMENT
1235 S.W. 87 AVE
MIAMI, FLORIDA 33174
TEL. (305) 264-8100 FAX. (305) 262-6978

COMP-ANL\W12-20PWC

SERIES FWS-200 ALUM SINGLE HUNG WDW. (N.I.)

PINO'S WINDOW CORP.
6860 N.W. 75TH STREET
MEDLEY, FL. 33166
TEL. (305) 888-9946 FAX (305) 888-8079

revisions:

no	date	by	description

date: 05-14-12
scale: 1/2" = 1"
dr. by: HAMID
chk. by:

drawing no.
W12-20

sheet 5 of 5