MIAMI-DADE COUNTY
PRODUCT CONTROL SECTION
11805 SW 26 Street, Room 208
Miami, Florida 33175-2474
T (786) 315-2590 F (786) 315-2599
www.miamidade.gov/economy

DEPARTMENT OF REGULATORY AND ECONOMIC RESOURCES (RER)
BOARD AND CODE ADMINISTRATION DIVISION

NOTICE OF ACCEPTANCE (NOA)

E.S. Windows, LLC
10653 NE Quaybridge Ct.
Miami, Fl.33138

SCOPE:

This NOA is being issued under the applicable rules and regulations governing the use of construction materials. The documentation submitted has been reviewed and accepted by Miami-Dade County RER -Product Control Section to be used in Miami Dade County and other areas where allowed by the Authority Having Jurisdiction (AHJ).

This NOA shall not be valid after the expiration date stated below. The Miami-Dade County Product Control Section (In Miami Dade County) and/or the AHJ (in areas other than Miami Dade County) reserve the right to have this product or material tested for quality assurance purposes. If this product or material fails to perform in the accepted manner, the manufacturer will incur the expense of such testing and the AHJ may immediately revoke, modify, or suspend the use of such product or material within their jurisdiction. RER reserves the right to revoke this acceptance, if it is determined by Miami-Dade County Product Control Section that this product or material fails to meet the requirements of the applicable building code.

This product is approved as described herein, and has been designed to comply with the Florida Building Code, including the High Velocity Hurricane Zone.

DESCRIPTION: Series "**6500**" Aluminum Sliding Glass Doors w/ reinforcements-**LMI**

APPROVAL DOCUMENT: Drawing No. **W13-07,** titled "Series -6500 Alum Sliding Glass Door (LMI)", sheets 1 through 13 of 13(inclusive sheets 2.1, 7.1 & 10.1), prepared by Al-Farooq Corporation, dated SEP 12, 2013, signed and sealed by Javad Ahmad, P.E., bearing the Miami-Dade County Product Control Approval stamp with the Notice of Acceptance number and approval date by the Miami-Dade County Product Control Section.

MISSILE IMPACT RATING: Large Missile Impact Resistant

Limitations:

1. See Design Pressures (DP) Vs. reinforcements & glazing options charts in sheet **3**. See anchors capacity charts in sheet **4**. Lower DP shall control of the charts.
2. See elevation for doors without Head Receptor (HR) in sheet **2**, w/o HR in sheet **2.1** and doors w/ free (unanchored) jambs details in sheet **11.** Light duty jambs item **# E-3** is limited to max DP=+/- 85 PSF only.
3. See sheet **5**, for fixed panel arrangement using alum clip item **E-29** (top/bottom) and threshold item **E-11.**

LABELING: Each unit shall bear a permanent label with the manufacturer's name or logo, city, state and series and following statement: "Miami-Dade County Product Control Approved", noted herein.

RENEWAL of this NOA shall be considered after a renewal application has been filed and there has been no change in the applicable building code negatively affecting the performance of this product.

TERMINATION of this NOA will occur after the expiration date or if there has been a revision or change in the materials, use, and/or manufacture of the product or process. Misuse of this NOA as an endorsement of any product, for sales, advertising or any other purposes shall automatically terminate this NOA. Failure to comply with any section of this NOA shall be cause for termination and removal of NOA.

ADVERTISEMENT: The NOA number preceded by the words Miami-Dade County, Florida, and followed by the expiration date may be displayed in advertising literature. If any portion of the NOA is displayed, then it shall be done in its entirety.

INSPECTION: A copy of this entire NOA shall be provided to the user by the manufacturer or its distributors and shall be available for inspection at the job site at the request of the Building Official.

This NOA consists of this page 1 and evidence pages E-1 & E-2, as well as approval document mentioned above.

The submitted documentation was reviewed by **Ishaq I. Chanda, P.E.**

MIAMI-DADE COUNTY APPROVED

9/19/13

NOA No. 13-0115.05
Expiration Date: September 19, 2018
Approval Date: September 19, 2013

NOTICE OF ACCEPTANCE: EVIDENCE SUBMITTED

A. DRAWINGS

1. Manufacturer's die drawings and sections.
2. Drawing No. **W13-07,** titled "Series -6500 Alum Sliding Glass Door (LMI)", sheets 1 through 13 of 13(inclusive sheets 2.1, 7.1 & 10.1), prepared by Al-Farooq Corporation, dated SEP 12, 2013, signed and sealed by Javad Ahmad, P.E.

B. TESTS

1. Test reports on: 1) Air Infiltration Test, per FBC, TAS 202-94
   2) Uniform Static Air Pressure Test, Loading per FBC TAS 202-94
   3) Water Resistance Test, per FBC, TAS 202-94
   4) Large Missile Impact Test per FBC, TAS 201-94
   5) Cyclic Wind Pressure Loading per FBC, TAS 203-94
   6) Forced Entry Test, per FBC 2411 3.2.1, TAS 202-94

   along with marked-up drawings and installation diagram of OXXO aluminum sliding glass door, prepared by Fenestration Testing Laboratories, Test Report No. **FTL-7130 (FTL 12093),** dated 04/05/1, signed and sealed by Marlin D. Brinson, P.E.
2. Additional Test reports on
   1) Air Infiltration Test, per FBC, TAS 202-94
   2) Uniform Static Air Pressure Test, Loading per FBC TAS 202-94
   3) Water Resistance Test, per FBC, TAS 202-94
   4) Large Missile Impact Test per FBC, TAS 201-94
   5) Cyclic Wind Pressure Loading per FBC, TAS 203-94
   6) Forced Entry Test, per FBC 2411 3.2.1, TAS 202-94

   Along with marked-up drawings and installation diagram of OXXX aluminum SGD, prepared by Fenestration Testing Laboratories, Test Report No. **FTL- 6990(FTL12051),** dated 08/06/12 and last revised on 09-12-13, signed and sealed by Marlin D. Brinson, P.E.

C. CALCULATIONS

1. Anchor verification calculations and structural analysis, complying with FBC-2010, prepared by Al Farooq Corporation, dated JUL 07, 2013 and last revised on SEP 05, 2013, signed and sealed by Javad Ahmad, P.E.
2. Engineering structural analysis of tested stiles & interlocks Vs. redesigned, prepared by Al Farooq Corporation, dated AUG 13, 2012, signed and sealed by Javad Ahmad, P.E. and approved by RER dated 09/14/12.
3. Glazing complies w/ ASTME-1300-02 & -04.

D. QUALITY ASSURANCE

1. Miami Dade Department of Regulatory and Economic Resources (RER).

E. MATERIAL CERTIFICATIONS

1. Notice of Acceptance No. **11-0624.02** issued to E.I. DuPont DeNemours & Co., Inc. for their "**DuPont Sentry Glass ® Interlayer**", expiring on 01/14/17.
2. Notice of Acceptance No. **11-0624.01** issued to E.I. DuPont DeNemours for "**Butacite PVB Interlayer**", expiring on 12-11-2016

Ishaq I. Chanda

Ishaq I. Chanda, P.E.
Product Control Examiner
NOA No. 13-0115.05
Expiration Date: September 19, 2018
Approval Date: September 19, 2013

NOTICE OF ACCEPTANCE: EVIDENCE SUBMITTED

F. STATEMENTS

1. Statement letter of conformance to FBC 2010 and letter of no financial interest, prepared by Al Farooq Corporation, dated 07/16/13, signed and sealed by Javad Ahmad, P.E.
2. E-mail dated 09/12/13 issued by Fenestration testing lab, clarify ½" shim gap used at unanchored (free) jambs in Test report FTL-7130, sample A-1, sent by Ms. Iliana Sanchez.
3. Lab compliance as part of the above referenced test report.

G. OTHER

1. Test proposal dated AUG 13, 2012, prepared by Al-Farooq Corp and approved by RER dated 09/14/12.
2. ES Windows Distribution agreement -Energia Solar, S.A. and ES Windows, LLC, dated 09/12/13, signed by Ms. Adriana Montoya, Manager and Andres Chamorro, General manager respectively on behalf of the companies.
3. Technical cut sheet data for EPDM, rubber compound by Solucionesencaucho, Columbia.

Ishaq I. Chanda

Ishaq I. Chanda, P.E.
Product Control Examiner
NOA No. 13-0115.05
Expiration Date: September 19, 2018
Approval Date: September 19, 2013

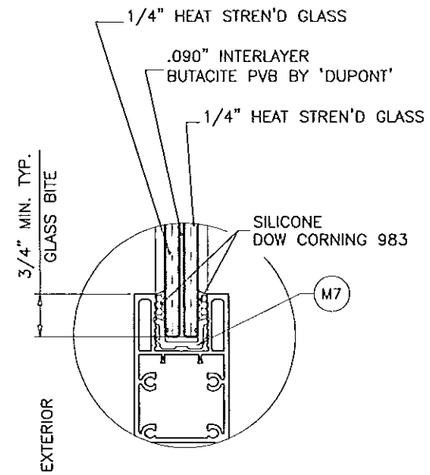

GLASS TYPE 'A'

9/16" OVERALL LAMINATED GLASS

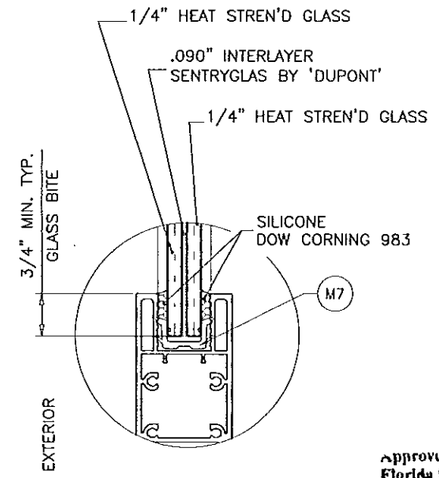

GLASS TYPE 'B'

9/16" OVERALL LAMINATED GLASS

Approved as complying with the Florida Building Code
Date SEP 19, 2013
NOA# 13-0115.06
Miami-Dade Product Control
By

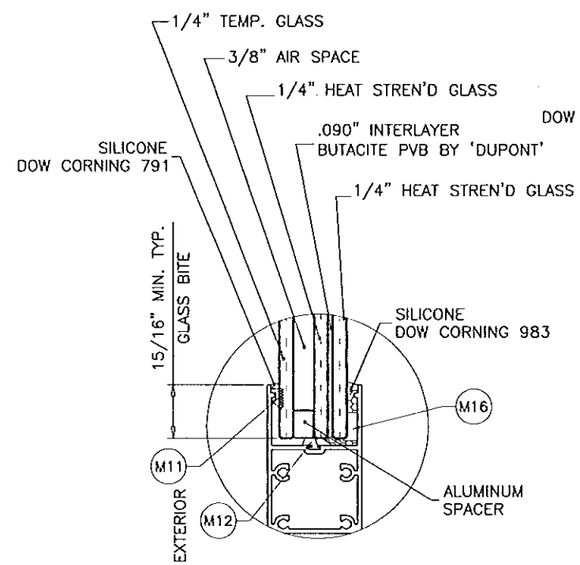

GLASS TYPE 'AI'

1-1/4" OVERALL INSUL. LAM. GLASS

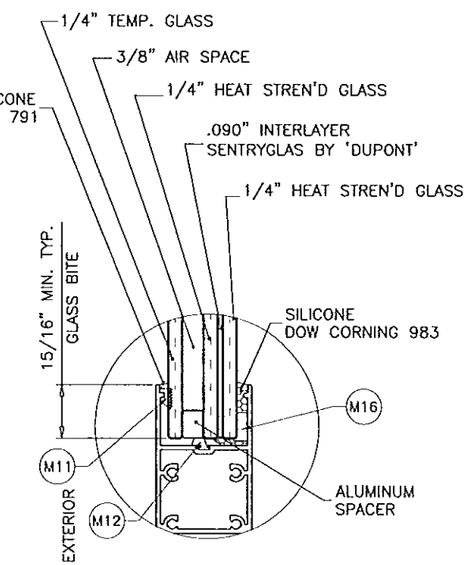

GLASS TYPE 'BI'

1-1/4" OVERALL INSUL. LAM. GLASS

GLAZING OPTIONS

INSTRUCTIONS:

USE CHARTS AS FOLLOWS.

STEP 1 DETERMINE DESIGN WIND LOAD REQUIREMENT BASED ON WIND VELOCITY, BLDG. HEIGHT, WIND ZONE USING APPLICABLE ASCE 7 STANDARD.

STEP 2 DETERMINE DOOR CAPACITY FROM TABLES ON SHEET 3 FOR THE GLASS TYPE AND REINFORCING TO USE.

STEP 3 USING CHARTS ON SHEET 4 SELECT ANCHOR OPTION WITH DESIGN RATING MORE THAN DESIGN LOAD SPECIFIED IN STEP 1 ABOVE.

STEP 4 THE LOWEST VALUE RESULTING FROM STEPS 2 AND 3 SHALL APPLY TO ENTIRE SYSTEM.

THESE DOORS ARE RATED FOR LARGE & SMALL MISSILE IMPACT. SHUTTERS ARE NOT REQUIRED.

SERIES ES-6500
ALUMINUM SLIDING GLASS DOOR

THIS PRODUCT HAS BEEN DESIGNED AND TESTED TO COMPLY WITH THE REQUIREMENTS OF THE FLORIDA BUILDING CODE INCLUDING HIGH VELOCITY HURRICANE ZONE (HVHZ).

1BY OR 2BY WOOD BUCKS BY OTHERS, MUST BE ANCHORED PROPERLY TO TRANSFER LOADS TO THE STRUCTURE.

ANCHORS SHALL BE AS LISTED, SPACED AS SHOWN ON DETAILS, ANCHORS EMBEDMENT TO BASE MATERIAL SHALL BE BEYOND WALL DRESSING OR STUCCO.

ANCHORING OR LOADING CONDITIONS NOT SHOWN IN THESE DETAILS ARE NOT PART OF THIS APPROVAL.

A LOAD DURATION INCREASE IS USED IN DESIGN OF ANCHORS INTO WOOD ONLY.

ALL SHIMS TO BE LOAD BEARING.

MATERIALS INCLUDING BUT NOT LIMITED TO STEEL/METAL SCREWS, THAT COME INTO CONTACT WITH OTHER DISSIMILAR MATERIALS SHALL MEET THE REQUIREMENTS OF THE FLORIDA BLDG. CODE SECTION 2003.8.4.

DAYLITE OPENINGS WIDTHS:
FIXED STILE-INTERLOCK = PANEL WIDTH - 7.437"
INTERLOCK-ASTRAGAL = PANEL WIDTH - 6.375"
LOCK STILE-INTERLOCK = PANEL WIDTH - 7.187"

DAYLITE OPENING HEIGHT:
PANEL HEIGHT - 7.375"

PANEL HEIGHT = DOOR FRAME HEIGHT - 1.750" (W/O RECEPTOR)
PANEL HEIGHT = OVERALL HEIGHT - 3.500" (WITH RECEPTOR)

Engr: JAVAD AHMAD
CIVIL
FLA. PE # 70592
C.A.N. 3538
SEP 12 2013

LAMINATED GLASS
INSUL. LAM. GLASS
LARGE MISSILE IMPACT

AL-FAROOQ CORPORATION
ENGINEERS & PRODUCT DEVELOPMENT
1235 S.W. 87 AVE
MIAMI, FLORIDA 33174
TEL (305) 264-8100 FAX (305) 262-6978
COMP-ANL\W13-07ESW

SERIES ES-6500 ALUM SLIDING GLASS DOOR (L.M.I.)

E.S. WINDOWS, LLC
5220 N.W. 72 AVE. BAY #4
MIAMI, FL. 33166
TEL. (305) 624-7775 FAX. (305) 624-7777

revisions:

no	date	by	description
A	09.03.13		REV. PER RER COMMENTS

date: 03-17-13
scale: 3/8" = 1"
dr. by: TARIQ
chk. by:

drawing no.
W13-07

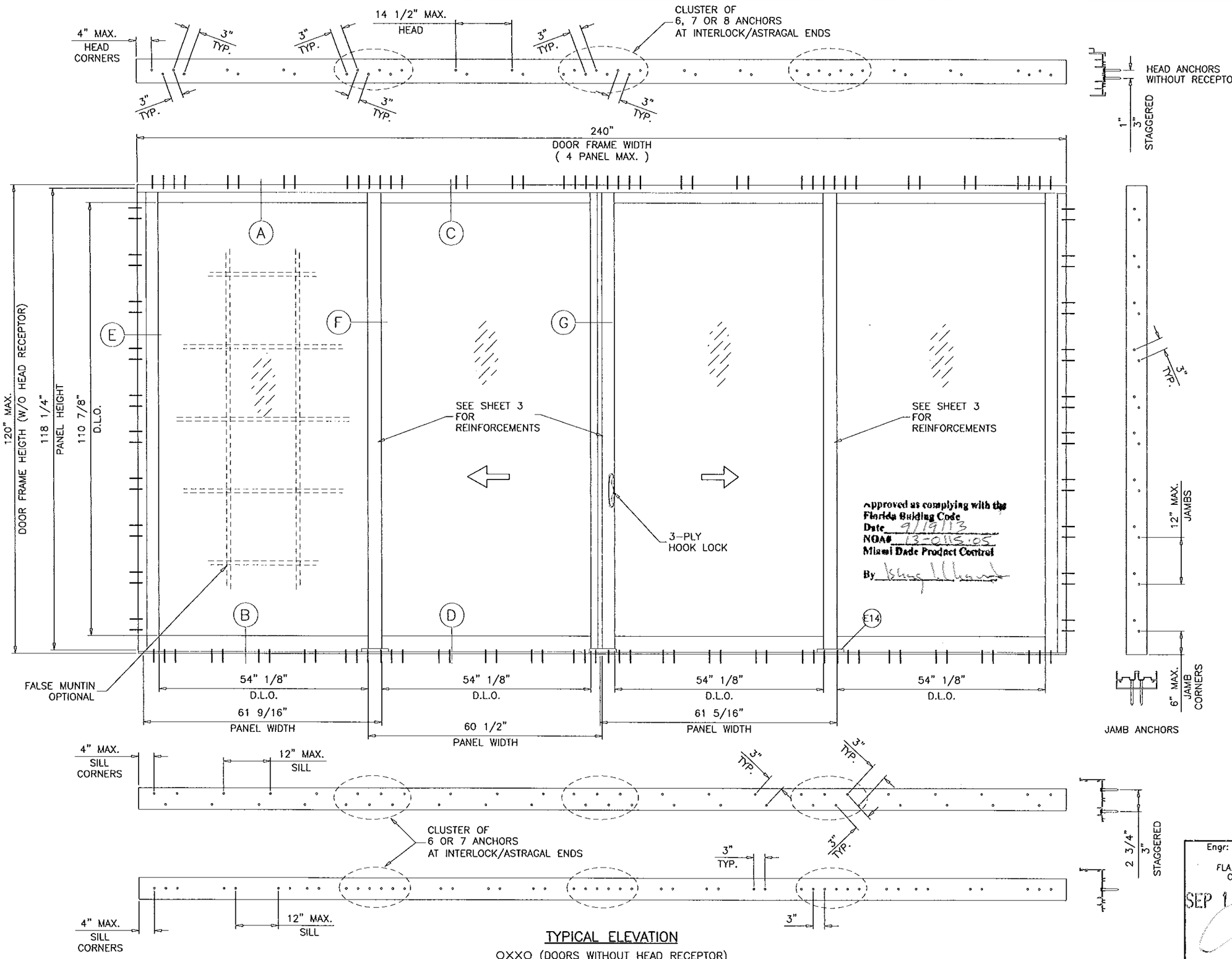

Approved as complying with the Florida Building Code
Date 9/19/13
NOA# 13-0115.05
Miami Dade Product Control
By

SEE CHART ON SHEET 3 FOR DESIGN LOAD CAPACITY OF DESIRED GLASS SIZE AND REINFORCING TYPES.

SEE CHART ON SHEET 4 FOR HEAD OR SILL ANCHOR CAPACITY.

LOWER DESIGN PRESSURES FROM DESIGN LOAD CHART OR ANCHOR CHARTS WILL APPLY TO ENTIRE SYSTEM.

TYPICAL ELEVATION

OXXO (DOORS WITHOUT HEAD RECEPTOR)

Engr: JAVAD AHMAD
CIVIL
FLA. PE # 70592
C.A.N. 3538

SEP 12 2013

AL-FAROOQ CORPORATION
ENGINEERS & PRODUCT DEVELOPMENT
1235 S.W. 87 AVE
MIAMI, FLORIDA 33174
TEL. (305) 264-8100 FAX. (305) 262-6978
COMP-ANL\W13-07ESW

SERIES ES-6500 ALUM SLIDING GLASS DOOR (L.M.I.)

E.S. WINDOWS, LLC
5220 N.W. 72 AVE. BAY #4
MIAMI, FL. 33166
TEL. (305) 624-7775 FAX. (305) 624-7777

revisions:

no	date	by	description
A	09.03.13		REV. PER RER COMMENTS

date: 03-17-13
scale: 1/2"=1'-0"
dr. by: TARIQ
chk. by:

drawing no.
W13-07

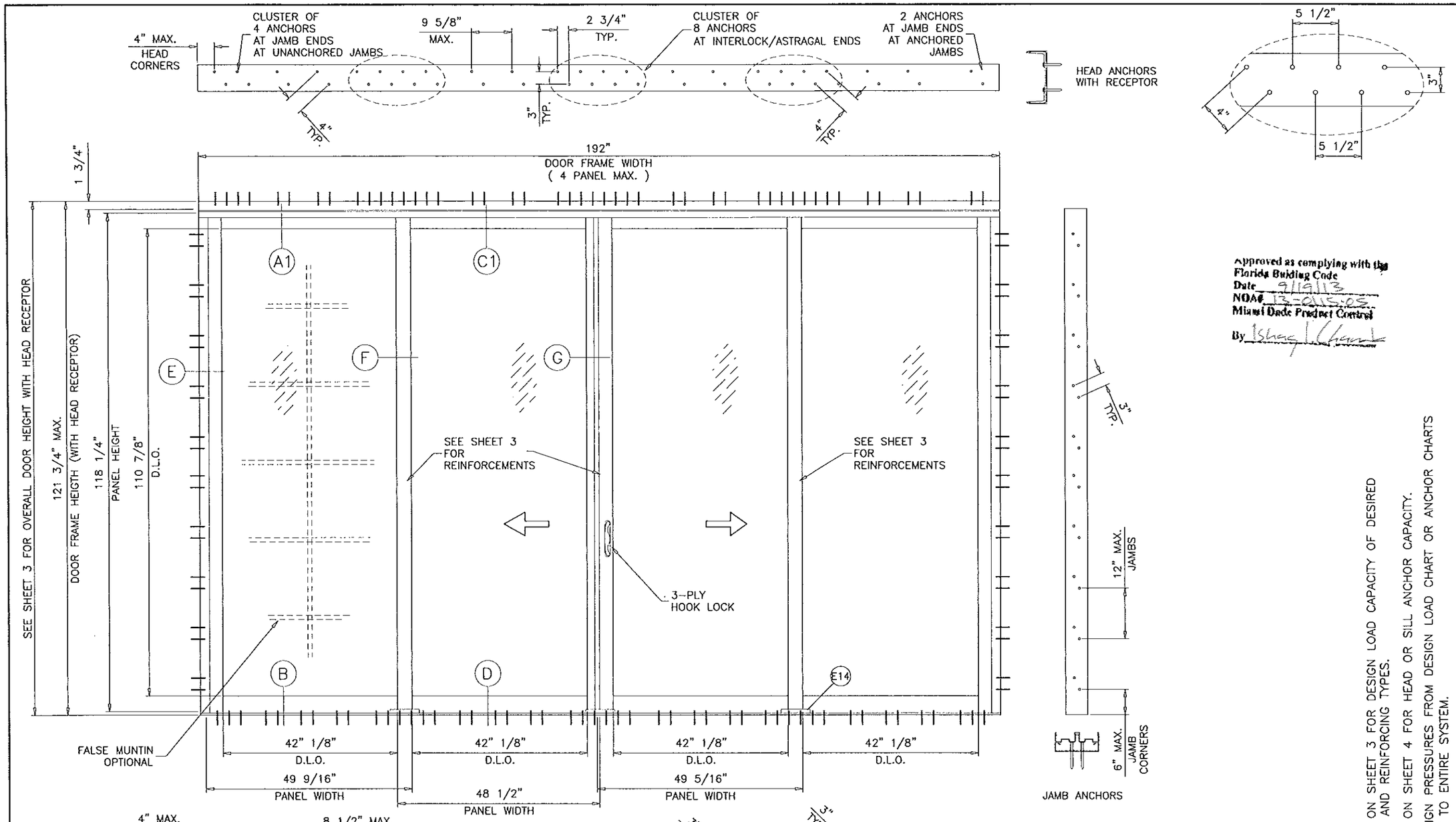

TYPICAL ELEVATION

OXXO (DOORS WITH HEAD RECEPTOR)

Approved as complying with the Florida Building Code
Date 9/19/13
NOA# 13-0115.05
Miami Dade Product Control
By Ishaq Chand

SEE CHART ON SHEET 3 FOR DESIGN LOAD CAPACITY OF DESIRED GLASS SIZE AND REINFORCING TYPES.

SEE CHART ON SHEET 4 FOR HEAD OR SILL ANCHOR CAPACITY.

LOWER DESIGN PRESSURES FROM DESIGN LOAD CHART OR ANCHOR CHARTS WILL APPLY TO ENTIRE SYSTEM.

Engr: JAVAD AHMAD
CIVIL
FLA. PE # 70592
C.A.N. 3538

SEP 12 2013

AL-FAROOQ CORPORATION
ENGINEERS & PRODUCT DEVELOPMENT
1235 S.W. 87 AVE
MIAMI, FLORIDA 33174
TEL (305) 264-8100 FAX. (305) 262-6978

COMP-ANL\W13-07ESW

SERIES ES-6500 ALUM SLIDING GLASS DOOR (L.M.I.)

E.S. WINDOWS, LLC
5220 N.W. 72 AVE. BAY #4
MIAMI, FL. 33166
TEL. (305) 624-7775 FAX. (305) 624-7777

revisions:

no	date	by	description
A	09.03.13		REV. PER RER COMMENTS

date: 03-17-13
scale: 1/2"=1'-0"
dr. by: TARIQ
chk. by:

drawing no.
W13-07

DESIGN LOAD CAPACITY – PSF (WITH OR WITHOUT HEAD RECEPTOR)									
AVERAGE PANEL WIDTH INCHES	DOOR FRAME HEIGHT INCHES	REINF. LEVEL '1'				REINF. LEVEL '2'		REINF. LEVEL '3'	
		GLASS 'A' & 'A1'		GLASS 'B' & 'B1'		GLASS 'B' & 'B1'		GLASS 'B' & 'B1'	
		EXT.(+)	INT.(–)	EXT.(+)	INT.(–)	EXT.(+)	INT.(–)	EXT.(+)	INT.(–)
36	82	85.0	85.0	85.0	85.0	110.0	120.0	120.0	135.0
42		85.0	85.0	85.0	85.0	110.0	120.0	120.0	135.0
48		85.0	85.0	85.0	85.0	110.0	120.0	120.0	135.0
54		85.0	85.0	85.0	85.0	110.0	120.0	120.0	135.0
60		–	–	85.0	85.0	110.0	120.0	120.0	135.0
36	84	85.0	85.0	85.0	85.0	110.0	120.0	120.0	135.0
42		85.0	85.0	85.0	85.0	110.0	120.0	120.0	135.0
48		85.0	85.0	85.0	85.0	110.0	120.0	120.0	135.0
54		85.0	85.0	85.0	85.0	110.0	120.0	120.0	135.0
60		–	–	85.0	85.0	110.0	120.0	120.0	135.0
36	90	85.0	85.0	85.0	85.0	110.0	120.0	120.0	135.0
42		85.0	85.0	85.0	85.0	110.0	120.0	120.0	135.0
48		85.0	85.0	85.0	85.0	110.0	120.0	120.0	135.0
54		–	–	85.0	85.0	110.0	120.0	120.0	135.0
60		–	–	85.0	85.0	–	–	120.0	135.0
36	96	85.0	85.0	85.0	85.0	110.0	120.0	120.0	135.0
42		85.0	85.0	85.0	85.0	110.0	120.0	120.0	135.0
48		85.0	85.0	85.0	85.0	110.0	120.0	120.0	135.0
54		–	–	85.0	85.0	–	–	120.0	135.0
60		–	–	85.0	85.0	–	–	120.0	135.0
36	102	–	–	85.0	85.0	110.0	120.0	120.0	135.0
42		–	–	85.0	85.0	110.0	120.0	120.0	135.0
48		–	–	85.0	85.0	110.0	120.0	120.0	135.0
54		–	–	85.0	85.0	–	–	120.0	135.0
60				85.0	85.0	–	–	–	–
36	108	–	–	85.0	85.0	110.0	120.0	120.0	135.0
42		–	–	85.0	85.0	110.0	120.0	120.0	135.0
48		–	–	85.0	85.0	–	–	120.0	135.0
54		–	–	85.0	85.0	–	–	–	–
60		–	–	85.0	85.0	–	–	–	–
36	114	–	–	85.0	85.0	110.0	120.0	120.0	135.0
42		–	–	85.0	85.0	110.0	120.0	120.0	135.0
48		–	–	85.0	85.0	–	–	120.0	135.0
54		–	–	85.0	85.0	–	–	–	–
60		–	–	85.0	85.0	–	–	–	–
36	120	–	–	85.0	85.0	110.0	120.0	120.0	135.0
42		–	–	85.0	85.0	110.0	120.0	120.0	135.0
48		–	–	85.0	85.0	–	–	120.0	135.0
54		–	–	85.0	85.0	–	–	–	–
60		–	–	85.0	85.0	–	–	–	–

CHART ABOVE SHOWS FRAME HEIGHTS FOR DOORS WITHOUT HEAD RECEPTOR.
FOR DOORS WITH HEAD RECEPTORS OVERALL HEIGHT = DOOR FRAME HT. FROM CHART + 1–3/4".

AVERAGE PANEL WIDTH = DOOR FRAME WIDTH / NUMBER OF PANELS
(MAX. 4 PANEL OR LESS)

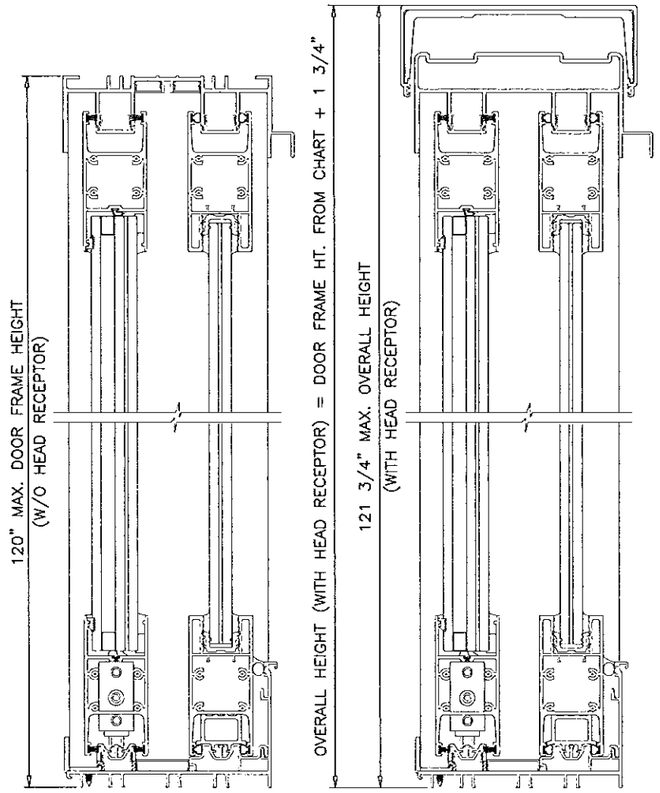

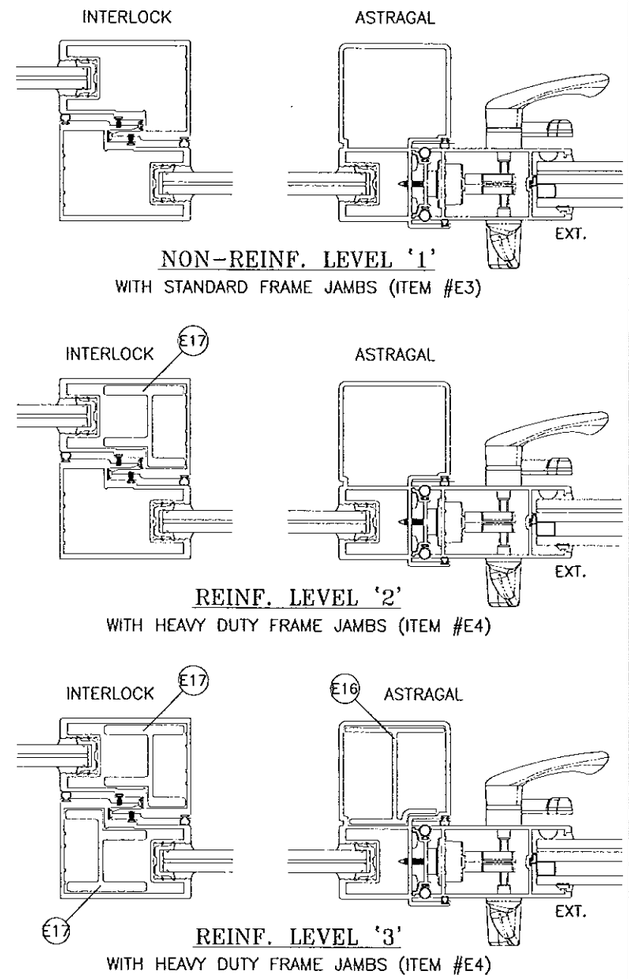

Approved as complying with the Florida Building Code
Date 9/19/13
NOA# 13-0115.05
Miami-Dade Product Control
By

NOTE:
SEE SHEET 10 FOR FIXED PANEL CLIP, ANGLE AND SNAP ON THRESHOLD REQUIREMENT.
ALSO SEE SHEET 6 FOR APPLICABLE EXTRUSION TEMPERS FOR STILES/INTERLOCKS.

DOOR HEIGHT AND WIDTH SIZE MUST COMPLY EGRESS REQUIREMENTS PER FBC AS REQUIRED.

NOTE:
GLASS CAPACITIES ON THIS SHEET ARE BASED ON ASTM E1300–09 (3 SEC. GUSTS) AND FLORIDA BUILDING COMMISSION DECLARATORY STATEMENT DCA05–DEC–219

Engr: JAVAD AHMAD
CIVIL
FLA. PE # 70592
C.A.N. 3538
SEP 12 2013

AL-FAROOQ CORPORATION
ENGINEERS & PRODUCT DEVELOPMENT
1235 S.W. 87 AVE
MIAMI, FLORIDA 33174
TEL (305) 264-8100 FAX. (305) 262-6978

COMP–ANL\W13–07ESW

SERIES ES–6500 ALUM SLIDING GLASS DOOR (L.M.I.)

E.S. WINDOWS, LLC
5220 N.W. 72 AVE. BAY #4
MIAMI, FL. 33166
TEL. (305) 624–7775 FAX. (305) 624–7777

revisions:

no	date	by	description
A	09.03.13	REV. PER RER	COMMENTS

date: 03–17–13
scale: –
dr. by: TARIQ
chk. by:

drawing no.
W13–07

HEAD ANCHOR LOAD CAPACITY - PSF (DOORS WITHOUT HEAD RECEPTOR)

ANCHOR TYPE		ANCHOR TYPE 'A'			ANCHOR TYPE 'B'				ANCHOR TYPE 'C'				ANCHOR TYPE 'AA'		ANCHOR TYPE 'BB'		TYPE 'CC'
SHIM SPACE		1/2" MAX. SHIM			3/8" MAX. SHIM			1/4" SHIM	3/8" MAX. SHIM			1/4" SHIM	1/2" MAX. SHIM		1/2" MAX. SHIM		3/8" SHIM
AVERAGE PANEL WIDTH INCHES	DOOR FRAME HEIGHT INCHES	6 ANCHORS AT MTG. STILE ENDS EXT. (+) INT. (-)	7 ANCHORS AT MTG. STILE ENDS EXT. (+) INT. (-)	8 ANCHORS AT MTG. STILE ENDS EXT. (+) INT. (-)	6 ANCHORS AT MTG. STILE ENDS EXT. (+) INT. (-)	7 ANCHORS AT MTG. STILE ENDS EXT. (+) INT. (-)	8 ANCHORS AT MTG. STILE ENDS EXT. (+) INT. (-)	6 ANCHORS AT MTG. STILE ENDS EXT. (+) INT. (-)	6 ANCHORS AT MTG. STILE ENDS EXT. (+) INT. (-)	7 ANCHORS AT MTG. STILE ENDS EXT. (+) INT. (-)	8 ANCHORS AT MTG. STILE ENDS EXT. (+) INT. (-)	6 ANCHORS AT MTG. STILE ENDS EXT. (+) INT. (-)	6 ANCHORS AT MTG. STILE ENDS EXT. (+) INT. (-)	7 ANCHORS AT MTG. STILE ENDS EXT. (+) INT. (-)	6 ANCHORS AT MTG. STILE ENDS EXT. (+) INT. (-)	7 ANCHORS AT MTG. STILE ENDS EXT. (+) INT. (-)	6 ANCHORS AT MTG. STILE ENDS EXT. (+) INT. (-)
36	82	135.0	135.0	135.0	135.0	135.0	135.0	135.0	135.0	135.0	135.0	135.0	135.0	135.0	135.0	135.0	135.0
42		135.0	135.0	135.0	135.0	135.0	135.0	135.0	135.0	135.0	135.0	135.0	135.0	135.0	135.0	135.0	135.0
48		135.0	135.0	135.0	135.0	135.0	135.0	135.0	135.0	135.0	135.0	135.0	135.0	135.0	135.0	135.0	135.0
54		135.0	135.0	135.0	135.0	135.0	135.0	135.0	135.0	135.0	135.0	135.0	135.0	135.0	135.0	135.0	135.0
60		135.0	135.0	135.0	135.0	135.0	135.0	135.0	135.0	135.0	135.0	135.0	135.0	135.0	135.0	135.0	135.0
36	84	135.0	135.0	135.0	135.0	135.0	135.0	135.0	135.0	135.0	135.0	135.0	135.0	135.0	135.0	135.0	135.0
42		135.0	135.0	135.0	135.0	135.0	135.0	135.0	135.0	135.0	135.0	135.0	135.0	135.0	135.0	135.0	135.0
48		135.0	135.0	135.0	135.0	135.0	135.0	135.0	135.0	135.0	135.0	135.0	135.0	135.0	135.0	135.0	135.0
54		134.7	135.0	135.0	135.0	135.0	135.0	135.0	135.0	135.0	135.0	135.0	135.0	135.0	135.0	135.0	135.0
60		128.0	135.0	135.0	135.0	135.0	135.0	135.0	132.8	135.0	135.0	135.0	135.0	135.0	135.0	135.0	135.0
36	90	135.0	135.0	135.0	135.0	135.0	135.0	135.0	135.0	135.0	135.0	135.0	135.0	135.0	135.0	135.0	135.0
42		135.0	135.0	135.0	135.0	135.0	135.0	135.0	135.0	135.0	135.0	135.0	135.0	135.0	135.0	135.0	135.0
48		130.9	135.0	135.0	135.0	135.0	135.0	135.0	135.0	135.0	135.0	135.0	135.0	135.0	135.0	135.0	135.0
54		121.9	135.0	135.0	135.0	135.0	135.0	135.0	126.5	135.0	135.0	135.0	135.0	135.0	135.0	135.0	135.0
60		115.2	134.4	135.0	135.0	135.0	135.0	135.0	119.5	135.0	135.0	135.0	135.0	135.0	135.0	135.0	135.0
36	96	135.0	135.0	135.0	135.0	135.0	135.0	135.0	135.0	135.0	135.0	135.0	135.0	135.0	135.0	135.0	135.0
42		131.7	135.0	135.0	135.0	135.0	135.0	135.0	135.0	135.0	135.0	135.0	135.0	135.0	135.0	135.0	135.0
48		120.0	135.0	135.0	135.0	135.0	135.0	135.0	124.5	135.0	135.0	135.0	135.0	135.0	135.0	135.0	135.0
54		111.3	129.9	135.0	135.0	135.0	135.0	135.0	115.5	134.7	135.0	135.0	135.0	135.0	135.0	135.0	135.0
60		104.7	122.2	135.0	130.2	135.0	135.0	135.0	108.7	126.8	135.0	135.0	131.3	135.0	135.0	135.0	135.0
36	102	135.0	135.0	135.0	135.0	135.0	135.0	135.0	135.0	135.0	135.0	135.0	135.0	135.0	135.0	135.0	135.0
42		121.9	135.0	135.0	135.0	135.0	135.0	135.0	126.5	135.0	135.0	135.0	135.0	135.0	135.0	135.0	135.0
48		110.8	129.2	135.0	135.0	135.0	135.0	135.0	114.9	134.1	135.0	135.0	135.0	135.0	135.0	135.0	135.0
54		102.4	119.5	135.0	127.3	135.0	135.0	135.0	106.2	123.9	135.0	135.0	128.4	135.0	134.2	135.0	135.0
60		85.0	–	–	85.0	–	–	85.0	85.0	–	–	85.0	85.0	–	85.0	–	85.0
36	108	128.0	135.0	135.0	135.0	135.0	135.0	135.0	132.8	135.0	135.0	135.0	135.0	135.0	135.0	135.0	135.0
42		113.5	132.4	135.0	135.0	135.0	135.0	135.0	117.8	135.0	135.0	135.0	135.0	135.0	135.0	135.0	135.0
48		102.9	120.0	135.0	127.9	135.0	135.0	135.0	106.7	124.5	135.0	135.0	129.0	135.0	134.8	135.0	135.0
54		85.0	–	–	85.0	–	–	85.0	85.0	–	–	85.0	85.0	–	85.0	–	85.0
60		85.0	–	–	85.0	–	–	85.0	85.0	–	–	85.0	85.0	–	85.0	–	85.0
36	114	120.0	135.0	135.0	135.0	135.0	135.0	135.0	124.5	135.0	135.0	135.0	135.0	135.0	135.0	135.0	135.0
42		106.2	123.9	135.0	132.0	135.0	135.0	135.0	110.2	128.5	135.0	135.0	133.2	135.0	135.0	135.0	135.0
48		96.0	112.0	128.0	119.3	135.0	135.0	135.0	99.6	116.2	132.8	135.0	120.4	135.0	125.8	135.0	135.0
54		85.0	85.0	–	85.0	–	–	85.0	85.0	–	–	85.0	85.0	–	85.0	–	85.0
60		82.3	85.0	–	85.0	–	–	85.0	85.0	–	–	85.0	85.0	–	85.0	–	85.0
36	120	112.9	131.8	135.0	135.0	135.0	135.0	135.0	117.2	135.0	135.0	135.0	135.0	135.0	135.0	135.0	135.0
42		99.7	116.4	133.0	124.0	135.0	135.0	135.0	103.5	120.7	135.0	135.0	125.1	135.0	130.7	135.0	135.0
48		90.0	105.0	120.0	111.9	130.6	135.0	135.0	93.4	108.9	124.5	135.0	112.9	131.7	117.9	135.0	135.0
54		82.6	85.0	–	85.0	–	–	85.0	85.0	85.0	–	85.0	85.0	–	85.0	–	85.0
60		76.8	85.0	–	85.0	–	–	85.0	79.7	85.0	–	85.0	85.0	–	85.0	–	85.0

HEAD ANCHOR LOAD CAPACITY - PSF (DOORS WITH HEAD RECEPTOR)

ANCHOR TYPE		'AAA' & 'BBB'
SHIM SPACE		1/4" SHIM
AVERAGE PANEL WIDTH INCHES	DOOR FRAME HEIGHT INCHES	8 ANCHORS AT MTG. STILE ENDS EXT. (+) INT. (-)
36	82	135.0
42		135.0
48		135.0
54		135.0
60		135.0
36	84	135.0
42		135.0
48		135.0
54		135.0
60		135.0
36	90	135.0
42		135.0
48		135.0
54		135.0
60		135.0
36	96	135.0
42		135.0
48		135.0
54		135.0
60		135.0
36	102	135.0
42		135.0
48		135.0
54		135.0
60		85.0
36	108	135.0
42		135.0
48		135.0
54		85.0
60		85.0
36	114	135.0
42		135.0
48		135.0
54		85.0
60		85.0
36	120	135.0
42		135.0
48		135.0
54		85.0
60		85.0

SILL ANCHOR LOAD CAPACITY - PSF

ANCHOR TYPE		ANCHOR TYPE 'B'	
SHIM SPACE		1/4" MAX. SHIM	
AVERAGE PANEL WIDTH INCHES	DOOR FRAME HEIGHT INCHES	6 ANCHORS AT MTG. STILE ENDS EXT. (+) INT. (-)	7 ANCHORS AT MTG. STILE ENDS EXT. (+) INT. (-)
36	82	135.0	135.0
42		135.0	135.0
48		135.0	135.0
54		135.0	135.0
60		135.0	135.0
36	84	135.0	135.0
42		135.0	135.0
48		135.0	135.0
54		135.0	135.0
60		135.0	135.0
36	90	135.0	135.0
42		135.0	135.0
48		135.0	135.0
54		135.0	135.0
60		135.0	135.0
36	96	135.0	135.0
42		135.0	135.0
48		135.0	135.0
54		135.0	135.0
60		135.0	135.0
36	102	135.0	135.0
42		135.0	135.0
48		135.0	135.0
54		135.0	135.0
60		85.0	–
36	108	135.0	135.0
42		135.0	135.0
48		135.0	135.0
54		85.0	–
60		85.0	–
36	114	135.0	135.0
42		135.0	135.0
48		135.0	135.0
54		85.0	–
60		85.0	–
36	120	135.0	135.0
42		135.0	135.0
48		135.0	135.0
54		85.0	–
60		85.0	–

CHART ABOVE SHOWS FRAME HEIGHTS FOR DOORS WITHOUT HEAD RECEPTOR.
FOR DOORS WITH HEAD RECEPTORS OVERALL HEIGHT = DOOR FRAME HT. FROM CHART + 1-3/4".

LIMIT ALL EXTERIOR LOADS TO +120.0 PSF

Approved as complying with the
Florida Building Code
Date 9/19/13
NOA# 13-0115.05
Miami-Dade Product Control
By [illegible]

Engr: JAVAD AHMAD
CIVIL
FLA. PE # 70592
C.A.N. 3538

SEP 12 2013

AL-FAROOQ CORPORATION
ENGINEERS & PRODUCT DEVELOPMENT
1235 S.W. 87 AVE
MIAMI, FLORIDA 33174
TEL (305) 264-8100 FAX. (305) 262-6978
COMP-ANL\W13-07ESW

SERIES ES-6500 ALUM. SLIDING GLASS DOOR (L.M.I.)

E.S. WINDOWS, LLC
5220 N.W. 72 AVE. BAY #4
MIAMI, FL. 33166
TEL. (305) 624-7777 FAX. (305) 624-7777

revisions:

no	date	by	description
A	09.03.13		REV. PER RER COMMENTS

date: 03-17-13
scale: –
dr. by: TARIQ
chk. by:

drawing no.
W13-07

sheet 4 of 13

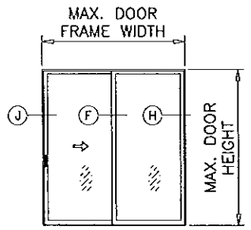

XO (SHOWN)
OX

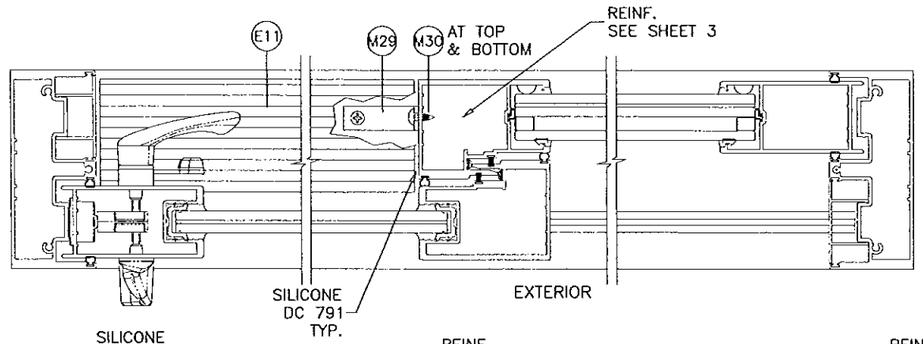

NOTE:

1. OPERABLE PANEL TO BE ON EXTERIOR TRACKS WITH SAFEGUARD.
2. CONFIGURATIONS SHOWN FOR ILLUSTRATION PURPOSES ONLY.
3. FOR APPLICABLE DESIGN PRESSURES AND REINFORCEMENTS REQUIREMENTS SEE SHEET 3.
4. FOR ANCHOR DETAILS SEE SHEETS 7 THRU 11.

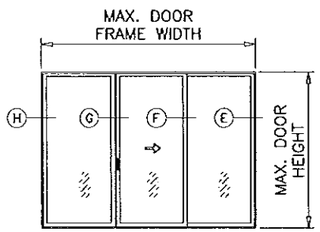

OXO (SHOWN)

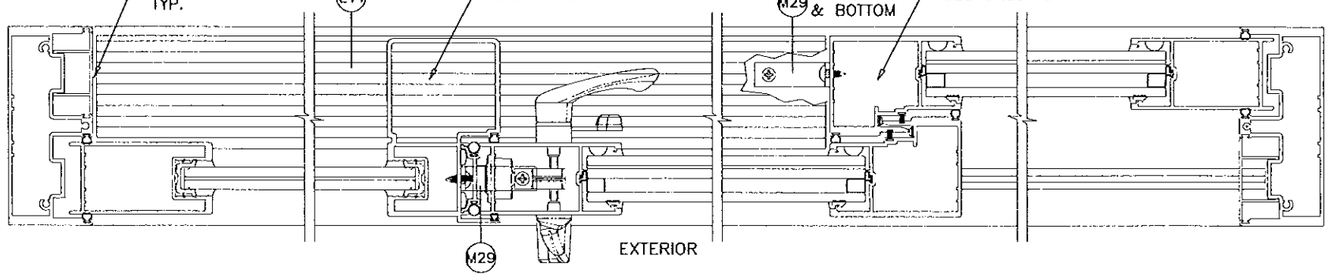

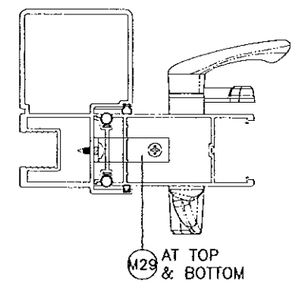

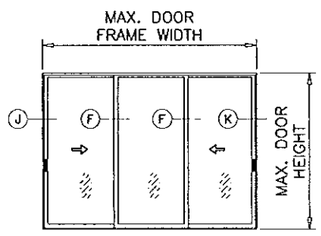

XOX (SHOWN)

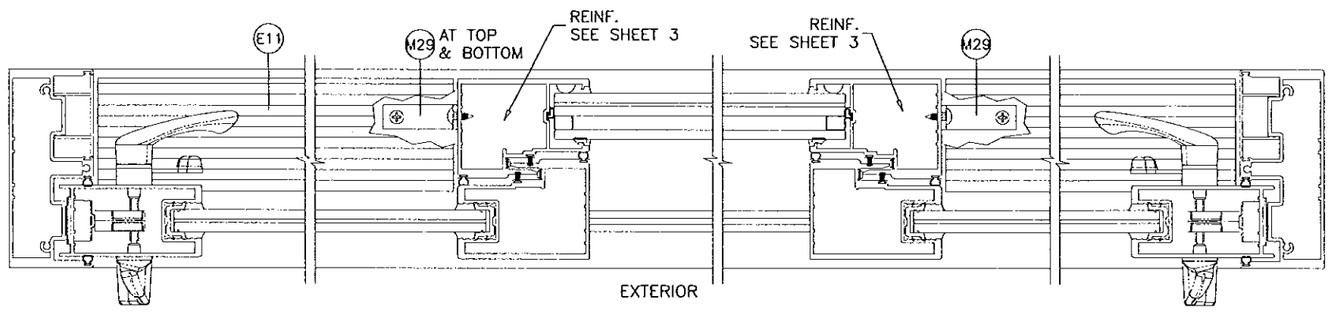

Approved as complying with the Florida Building Code
Date 9/19/13
NOA# 13-0115.05
Miami Dade Product Control
By

FOR UNANCHORED JAMBS USE ES-6500-004 ONLY

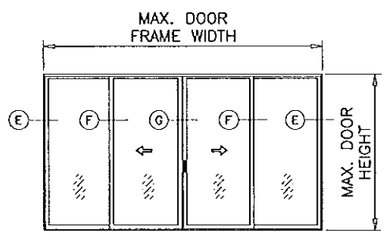

OXXO(SHOWN)

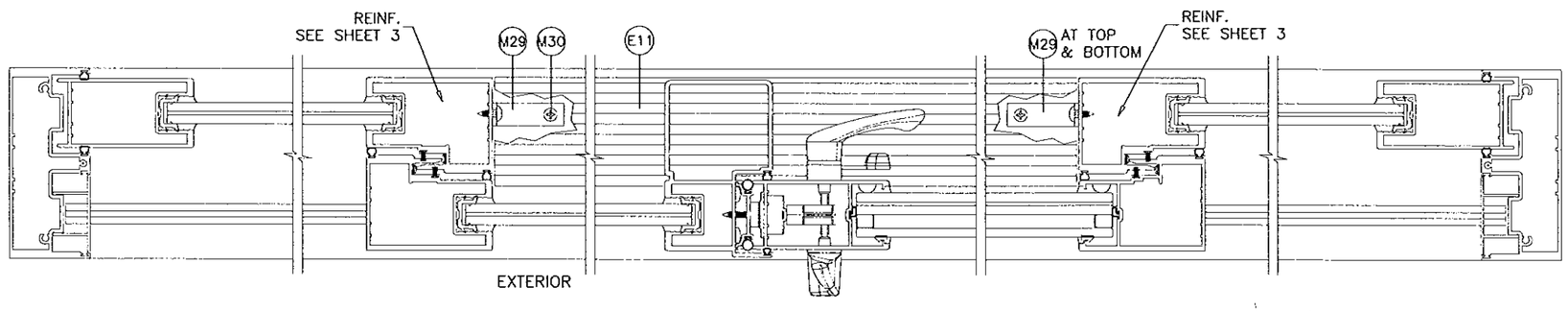

APPROVED CONFIGURATIONS

Engr: JAVAD AHMAD
CIVIL
FLA. PE # 70592
C.A.N. 3538

SEP 12 2013

AL-FAROOQ CORPORATION
ENGINEERS & PRODUCT DEVELOPMENT
1235 S.W. 87 AVE
MIAMI, FLORIDA 33174
TEL. (305) 264-8100 FAX. (305) 262-6978
COMP-ANL\W13-07ESW

SERIES ES-6500 ALUM SLIDING GLASS DOOR (L.M.I.)

E.S. WINDOWS, LLC
5220 N.W. 72 AVE. BAY #4
MIAMI, FL. 33166
TEL. (305) 624-7775 FAX. (305) 624-7777

revisions:

no	date	by	description
A	09.03.13		REV. PER RER COMMENTS

date: 03-17-13
scale: -
dr. by: TARIQ
chk. by:

drawing no.
W13-07

sheet 5 of 13

ITEM #	PART #	QUANTITY	DESCRIPTION	MATERIAL	MANF./SUPPLIER/REMARKS
E1	ES-6500-001	1	STANDARD FRAME HEAD	6005-T6	-
E2	ES-6500-002	1	FRAME SILL	6063-T6	-
E3	ES-6500-003	2	STANDARD FRAME JAMB	6063-T6	LIMIT MAX. LOADS TO ±85 PSF
E4	ES-6500-004	2	HEAVY DUTY FRAME JAMB	6063-T6	-
E5	ES-6500-005	2/ PANEL	TOP AND BOTTOM RAIL (INSUL. LAM. GLASS)	6063-T6	-
E6	ES-6500-006	1/ PANEL	LOCK STILE (INSUL. LAM. GLASS)	6063-T6	-
E7	ES-6500-007	1/ PANEL	INTERLOCK STILE (INSUL. LAM. GLASS)	6005-T5	-
E8	ES-6500-008	1	ASTRAGAL STILE (INSUL. LAM. GLASS)	6005-T6	-
E9	ES-6500-009	1	ASTRAGAL ADAPTER	6063-T6	-
E10	ES-6500-010	1	ADD-ON TRACK	6063-T6	-
E11	ES-6500-011	1	THRESHOLD (LENGTH = OPNG. WIDTH BETWEEN FIXED PANELS)	6063-T6	-
E12	ES-6500-012	2	SNAP-IN JAMB COVER (OPTIONAL)	6063-T5	-
E13	ES-6500-013	1	TRACK INSERT	6063-T6	-
E14	ES-6500-014A	-	RETAINER CLIP, 4" LONG	6063-T6	-
E15	ES-6500-015	AS REQD.	SCREEN RAIL	6063-T6	-
E16	ES-6500-016	AS REQD.	ASTRAGAL REINFORCEMENT, FULL PANEL LENGTH	6005-T5	-
E17	ES-6500-017	AS REQD.	INTERLOCK REINFORCEMENT, FULL PANEL LENGTH	6005-T5	-
E18	ES-6500-018	AS REQD.	HEAD COVER (OPTIONAL)	6063-T5	-
E22	ES-6011	AS REQD.	SCREW COVER (OPTIONAL)	6063-T6	-
E24	ES-6500-019	1	HEAD RECEPTOR	6063-T5	-
E25	ES-6500-020	1	RECEPTOR REINFORCEMENT, FULL LENGTH	6063-T5	-
E26	ES-6500-021	1	FRAME HEAD AT RECEPTOR	6005-T5	-
E27	ES-6500-023	1/ PANEL	LOCK STILE (LAM. GLASS)	6063-T6	-
E28	ES-6500-024	2/ PANEL	TOP AND BOTTOM RAIL (LAM. GLASS)	6063-T6	-
E29	ES-6500-025	1/ PANEL	INTERLOCK STILE (LAM. GLASS)	6005-T5	-
E30	ES-6500-027	1	SILL SCREW COVER	6063-T5	-
E31	ES-6500-026	1	ASTRAGAL STILE (LAM. GLASS)	6005-T5	-
E32	ES-6500-033	2	FIXED PANEL BOTTOM GUIDE	6005-T5	-
M1	#12 X 1 1/2"	3/ CORNER	FRAME ASSEMBLY SCREWS	ST. STEEL	P.H. SMS
M2	#10 X 1 1/4"	4/ CORNER	PANEL ASSEMBLY SCREWS	ST. STEEL	P.H. SMS
M3	#8 X 1"	2/ LOCK	LOCK FASTENERS	ST. STEEL	F.H. SMS
M4	#8 X 3/4"	2/ HANDLE	HANDLE SET FASTENERS	ST. STEEL	P.H. SMS
M6	#10 X 1/2"	2/ CLIP	RETAINER CLIP FASTENERS	ST. STEEL	F.H. SMS
M7	ES-6500-G01A	4/ PANEL	GLAZING GASKET (LAM. GLASS)	SILICONE	DUROMETER 65±5 SHORE A, EXTRUSIONES S.A.
M8	E-214	AS REQD.	ASTRAGAL ADAPTER W'STRIPPING	VINYL	THERMOPLASTIC ELASTOMER
M10	ES-8011	AS REQD.	SPACER GASKET	EPDM	DUROMETER 80±5 SHORE A, EXTRUSIONES S.A.
M11	27-445	AS REQD.	GLAZING WEDGE GASKET	EPDM	DUROMETER 75±5 SHORE A, SOLUCIONESENCAUCHO
M12	27-448	AS REQD.	BOTTOM RAIL GLAZING GASKET	EPDM	DUROMETER 68±5 SHORE A, SOLUCIONESENCAUCHO
M13	27-449	AS REQD.	GLAZING GASKET AT TOP RAIL AND STILES	EPDM	DUROMETER 75±5 SHORE A, SOLUCIONESENCAUCHO
M16	1/4" X 1/2"	AS REQD.	GLAZING TAPE (INSUL. LAM. GLASS)	FOAM	-
M17	Q300T190	AS REQD.	FABRIC COATED FOAM WEATHERSEAL	POLYETHYLENE	Q-LONG
M18	Q200T190	AS REQD.	WEATHERSEAL EXTERIOR	POLYETHYLENE	Q-LONG
M19	Q150T270	AS REQD.	INTERLOCK BUMPER	POLYETHYLENE	Q-LONG
M20	W2230012K	AS REQD.	PILE W'STRIPPING	POLYPROPYLENE	-
M21	GTT-234/460-02-A	2/ PANEL	ROLLER	-	PABOSE
M22	PS01-1015-00B	1	MORTISE LOCK KEEPER	-	INTERLOCK
M23	PS01-0035-00B	1	TWO POINT 3-PLY HOOK LOCK	-	INTERLOCK
M24	PS01-0016-XXX	1/ MOV. PANEL	HANDLE SET	-	INTERLOCK
M26	52019	AS REQD.	THRESHOLD W'STRIPPING	-	AMESBURY
M27	ES-7000 G01	AS REQD.	SILL W'STRIPPING	SILICONE	DUROMETER 60±5 SHORE A
M29	ALU-A-027	-	FIX. PANEL ANGLE, 2" X 2" X 1/8" X 7/8" LONG	6063-T5	HEAD/SILL (FIXED PANEL)
M30	#14 X 1"	2/ CLIP	FIX. PANEL ANGLE FASTENERS	-	HWH SMS
M31	ES-5008	AS REQD.	BULB W'STRIPPING	EPDM	DUROMETER 70 SHORE A
M32	ES-6500-S01	-	1/4" SPACER FOR JAMB	NYLON	-
M33	ES-6500-S02	-	1/2" SPACER FOR ASTRAGAL	NYLON	-
M35	P6304 AFK	-	ADHESIVE PILE PAD (4" X 1" X 1/2")	-	ULTRAFAB

Approved as complying with the
Florida Building Code
Date 9/19/13
NOA# 13-0115.05
Miami Dade Product Control
By

Engr: JAVAD AHMAD
CIVIL
FLA. PE # 70592
C.A.N. 3538

SEP 12 2013

AL-FAROOQ CORPORATION
ENGINEERS & PRODUCT DEVELOPMENT
1235 S.W. 87 AVE
MIAMI, FLORIDA 33174
TEL. (305) 264-8100 FAX. (305) 262-6978

COMP-ANL\W13-07ESW

SERIES ES-6500 ALUM SLIDING GLASS DOOR (L.M.I.)

E.S. WINDOWS, LLC
5220 N.W. 72 AVE. BAY #4
MIAMI, FL. 33166
TEL. (305) 624-7777 FAX. (305) 624-7777

revisions:

no	date	by	description
A	09.03.13		REV. PER RER COMMENTS

date: 03-17-13
scale: -
dr. by: TARIQ
chk. by:

drawing no.
W13-07

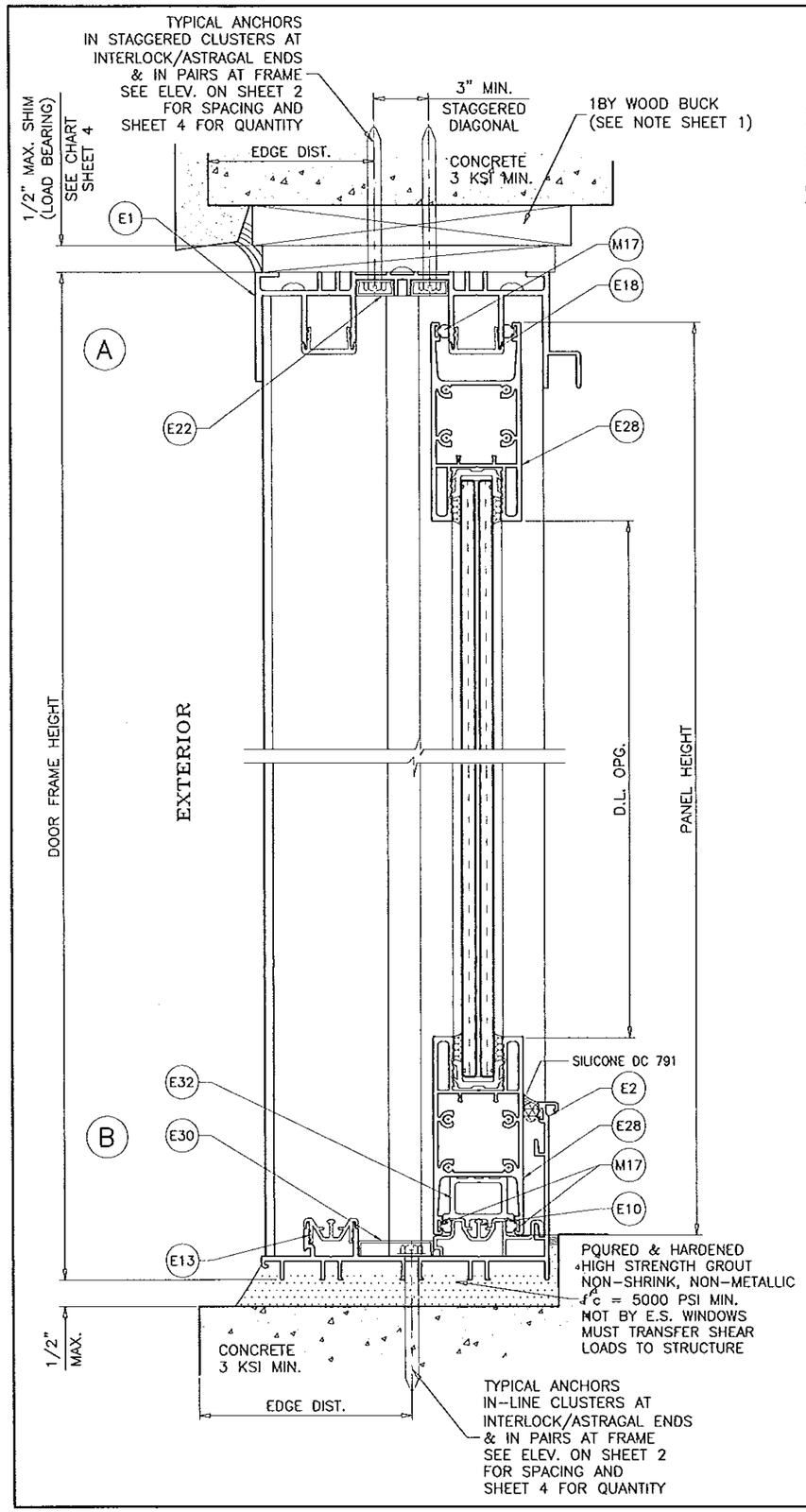

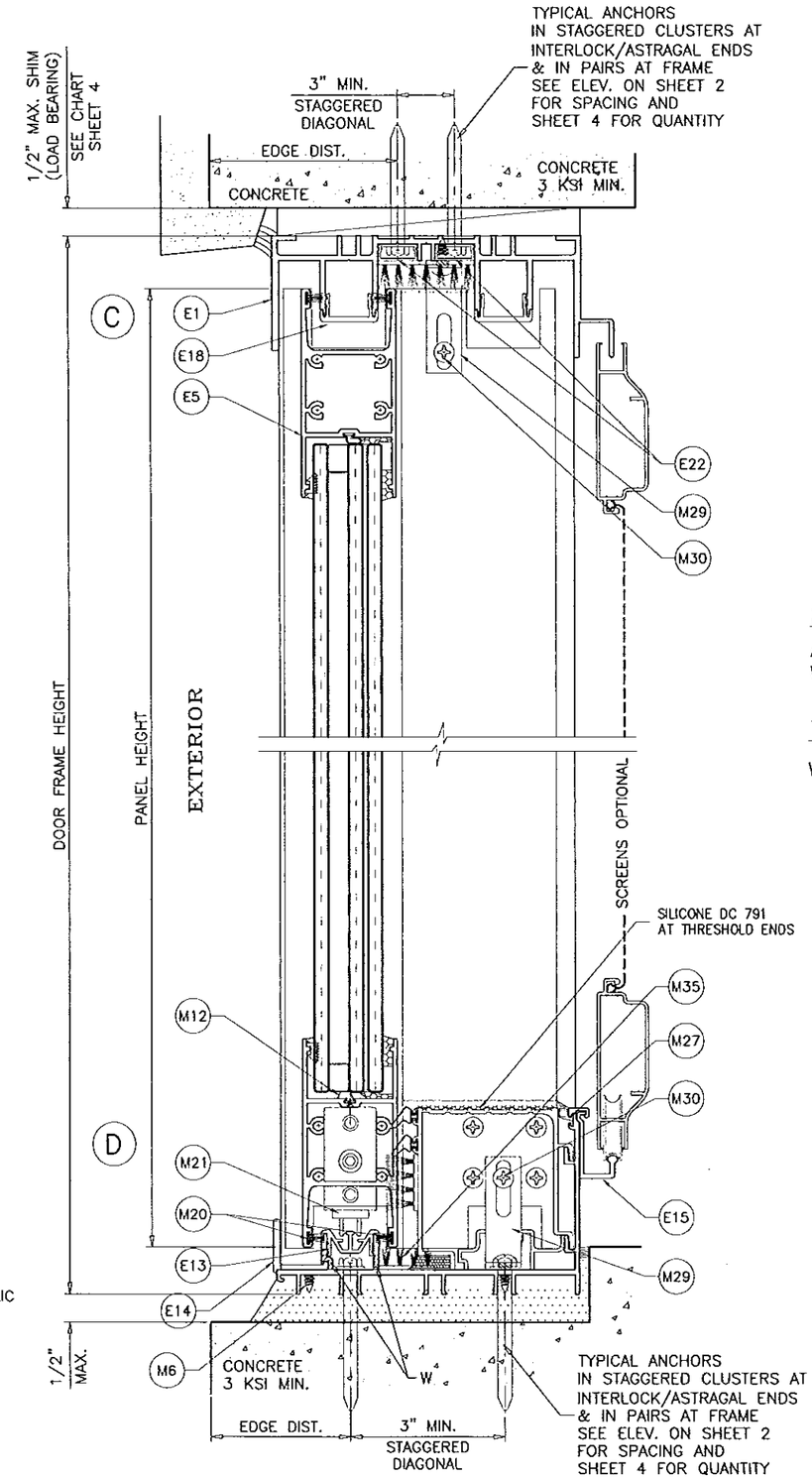

SEALANT:

ALL JOINTS AND FRAME CONNECTIONS SEALED WITH WHITE/ALUMINUM COLORED SILICONE.

WEEPHOLES:

W = 1/4" X 3" LONG WEEP HOLES AT 4 1/2" FROM EACH END.

Approved as complying with the Florida Building Code
Date 9/19/13
NOA# 13-0115.05
Miami Dade Product Control
By

UNITS WITHOUT HEAD RECEPTORS

Engr: JAVAD AHMAD
CIVIL
FLA. PE # 70592
C.A.N. 3538

SEP 12 2013

AL-FAROOQ CORPORATION
ENGINEERS & PRODUCT DEVELOPMENT
1235 S.W. 87 AVE
MIAMI, FLORIDA 33174
TEL (305) 264-8100 FAX. (305) 262-6978
COMP-ANL\W13-07ESW

SERIES ES-6500 ALUM SLIDING GLASS DOOR (L.M.I.)

E.S. WINDOWS, LLC
5220 N.W. 72 AVE. BAY #4
MIAMI, FL. 33166
TEL. (305) 624-7777 FAX. (305) 624-7775

revisions:

no	date	by	description
A	09.03.13	RER	REV. PER COMMENTS

date: 03-17-13
scale: 3/8" = 1"
dr. by: TARIQ
chk. by:

drawing no. W13-07

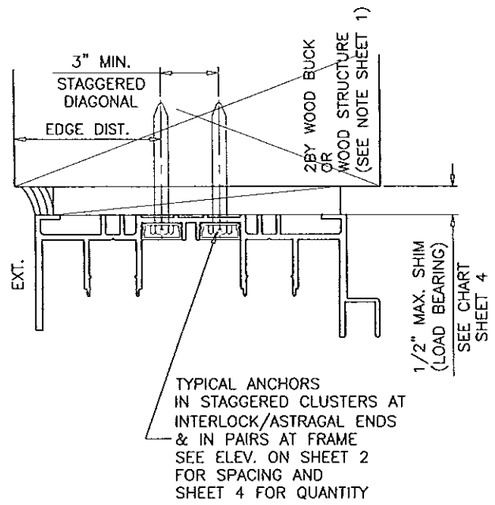

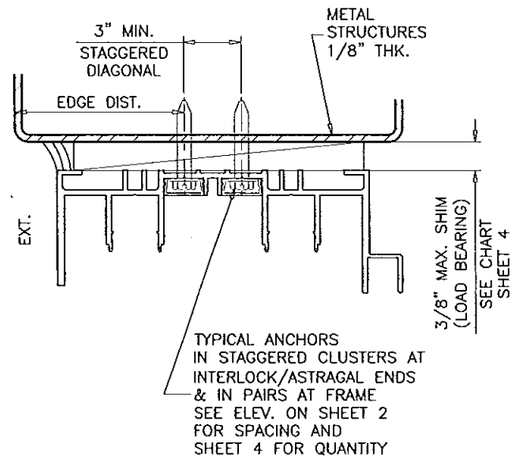

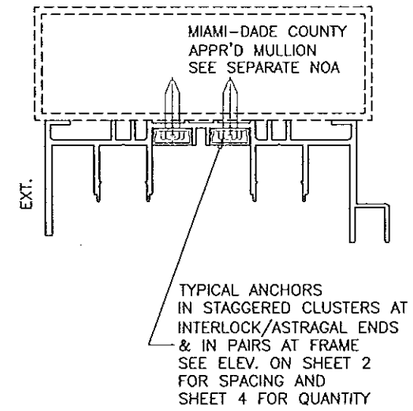

ALTERNATE SUBSTRATES UNITS WITHOUT HEAD RECEPTORS

Approved as complying with the Florida Building Code
Date 9/19/13
NOA# 13-0115.05
Miami Dade Product Control
By

Engr: JAVAD AHMAD
CIVIL
FLA. PE # 70592
C.A.N. 3538

SEP 12 2013

AL-FAROOQ CORPORATION
ENGINEERS & PRODUCT DEVELOPMENT
1235 S.W. 87 AVE
MIAMI, FLORIDA 33174
TEL. (305) 264-8100 FAX. (305) 262-6978

COMP-ANL\W13-07ESW

SERIES ES-6500 ALUM SLIDING GLASS DOOR (L.M.I.)

E.S. WINDOWS, LLC
5220 N.W. 72 AVE. BAY #4
MIAMI, FL. 33166
TEL. (305) 624-7775 FAX. (305) 624-7777

revisions:

no	date	by	description
A	09.03.13		REV. PER RER COMMENTS

date: 03-17-13
scale: 3/8" = 1"
dr. by: TARIQ
chk. by:

drawing no.
W13-07

sheet 7.1 of 13

1BY OR 2BY WOOD BUCKS AND METAL STRUCTURE NOT BY E.S. WINDOWS MUST SUSTAIN LOADS IMPOSED BY GLAZING SYSTEM AND TRANSFER THEM TO THE BUILDING STRUCTURE.

TYPICAL ANCHORS: SEE ELEV. FOR SPACING

AT HEAD (FOR DOORS WITHOUT HEAD RECEPTOR)

TYPE 'A'– 1/4" DIA. ULTRACON BY 'ELCO' (Fu=177 KSI, Fy=155 KSI)
INTO 2BY WOOD BUCKS OR WOOD STRUCTURES
1–1/2" MIN. PENETRATION INTO WOOD

THRU 1BY BUCKS INTO CONCRETE
1–1/4" MIN. EMBED INTO CONCRETE

TYPE 'B'– 1/4" DIA. ULTRACON BY 'ELCO' (Fu=177 KSI, Fy=155 KSI)
DIRECTLY INTO CONCRETE
1–1/2" MIN. EMBED

TYPE 'C'– 1/4" DIA. SELF DRILLING SCREWS (GRADE 5 CRS)
INTO MIAMI–DADE COUNTY APPROVED MULLIONS (1/8" THK. MIN.)
INTO METAL STRUCTURES
STEEL : 1/8" THK. MIN. (Fy = 36 KSI MIN.)
ALUMINUM : 1/8" THK. MIN. (6063–T5 MIN.)
(STEEL IN CONTACT WITH ALUMINUM TO BE PLATED OR PAINTED)

AT SILL

TYPE 'B'– 1/4" DIA. ULTRACON BY 'ELCO' (Fu=177 KSI, Fy=155 KSI)
DIRECTLY INTO CONCRETE
1–1/2" MIN. EMBED

AT JAMBS

TYPE 'A'– 1/4" DIA. ULTRACON BY 'ELCO' (Fu=177 KSI, Fy=155 KSI)
INTO 2BY WOOD BUCKS OR WOOD STRUCTURES
1–1/2" MIN. PENETRATION INTO WOOD

THRU 1BY BUCKS INTO CONC. OR MASONRY
1–1/4" MIN. EMBED INTO CONC. OR MASONRY

TYPE 'B'– 1/4" DIA. ULTRACON BY 'ELCO' (Fu=177 KSI, Fy=155 KSI)
DIRECTLY INTO CONC. OR MASONRY
1–1/4" MIN. EMBED INTO CONC. OR MASONRY

TYPE 'C'– #14 SMS OR SELF DRILLING SCREWS (GRADE 5 CRS)
INTO MIAMI–DADE COUNTY APPROVED MULLIONS (1/8" THK. MIN.)
INTO METAL STRUCTURES
STEEL : 1/8" THK. MIN. (Fy = 36 KSI MIN.)
ALUMINUM : 1/8" THK. MIN. (6063–T5 MIN.)
(STEEL IN CONTACT WITH ALUMINUM TO BE PLATED OR PAINTED)

ALTERNATE ANCHORS:

AT HEAD (FOR DOORS WITHOUT HEAD RECEPTOR)

TYPE 'AA'– 5/16" DIA. ULTRACON BY 'ELCO' (Fu=177 KSI, Fy=155 KSI)
INTO 2BY WOOD BUCKS OR WOOD STRUCTURES
1–1/2" MIN. PENETRATION INTO WOOD

THRU 1BY BUCKS INTO CONCRETE
1–3/4" MIN. EMBED INTO CONCRETE

TYPE 'BB'– 5/16" DIA. ULTRACON BY 'ELCO' (Fu=177 KSI, Fy=155 KSI)
DIRECTLY INTO CONCRETE
1–3/4" MIN. EMBED

TYPE 'CC'– 5/16" DIA. SELF DRILLING SCREWS (GRADE 5 CRS)
INTO MIAMI–DADE COUNTY APPROVED MULLIONS (1/8" THK. MIN.)
INTO METAL STRUCTURES
STEEL : 1/8" THK. MIN. (Fy = 36 KSI MIN.)
ALUMINUM : 1/8" THK. MIN. (6063–T5 MIN.)
(STEEL IN CONTACT WITH ALUMINUM TO BE PLATED OR PAINTED)

ANCHOR EDGE DISTANCES

INTO CONCRETE = 2–1/2" MIN.
INTO WOOD STRUCTURE = 1" MIN. (1/4" ANCHORS)
INTO WOOD STRUCTURE = 1–1/4" MIN. (5/16" ANCHORS)
INTO METAL STRUCTURE = 3/4" MIN.

CONCRETE AT HEAD, SILL OR JAMBS f'c = 3000 PSI MIN.
C–90 HOLLOW/FILLED BLOCK AT JAMBS f'm = 2000 PSI MIN.

Approved as complying with the Florida Building Code
Date 9/19/13
NOA# 12-0115.01
Miami Dade Product Control
By: [illegible]

Engr: JAVAD AHMAD
CIVIL
FLA. PE # 70592
C.A.N. 3538

SEP 12 2013

AL-FAROOQ CORPORATION
ENGINEERS & PRODUCT DEVELOPMENT
1235 S.W. 87 AVE
MIAMI, FLORIDA 33174
TEL. (305) 264-8100 FAX. (305) 262-6978

COMP–ANL\W13–07ESW

SERIES ES–6500 ALUM SLIDING GLASS DOOR (L.M.I.)

E.S. WINDOWS, LLC
5220 N.W. 72 AVE. BAY #4
MIAMI, FL. 33166
TEL. (305) 624–7775 FAX. (305) 624–7777

revisions:

no	date	by	description
A	09.03.13		REV. PER RER COMMENTS

date: 03–17–13
scale: 3/8" = 1"
dr. by: TARIQ
chk. by:

drawing no. W13–07

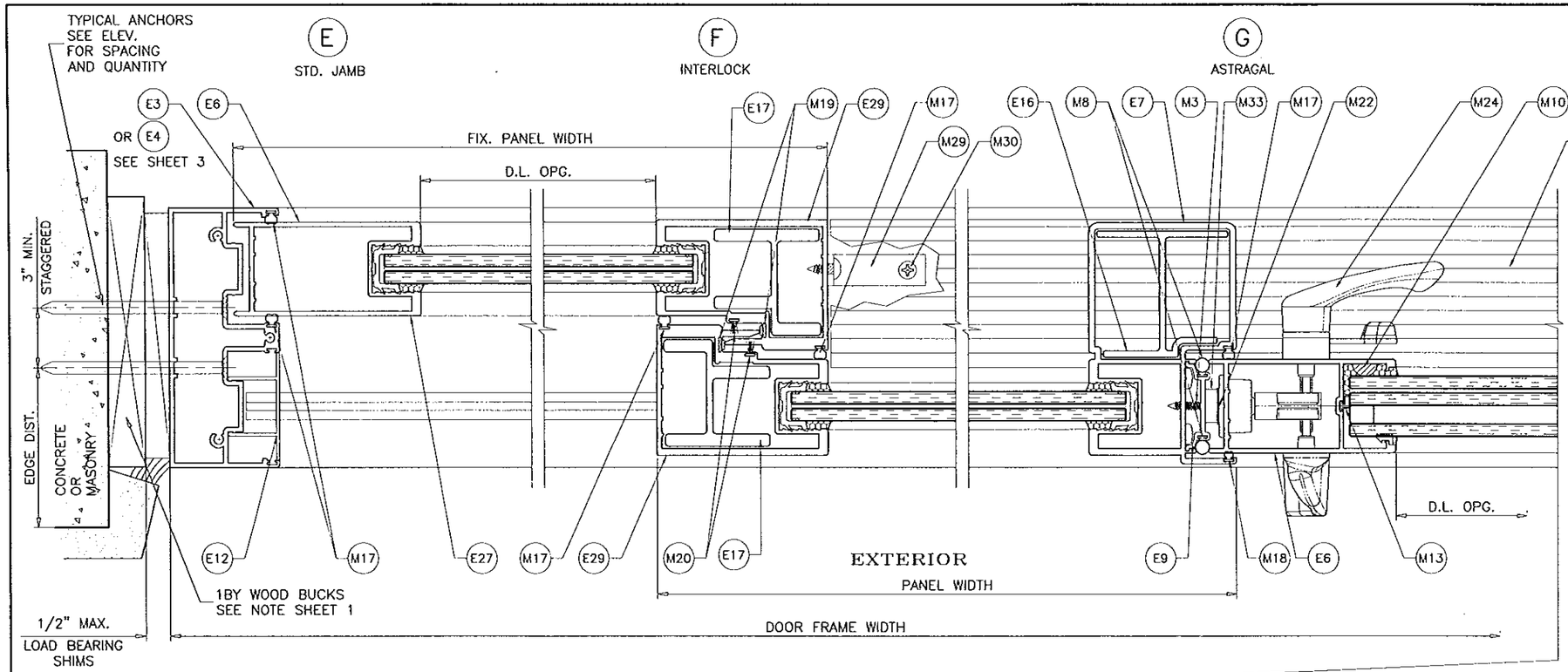

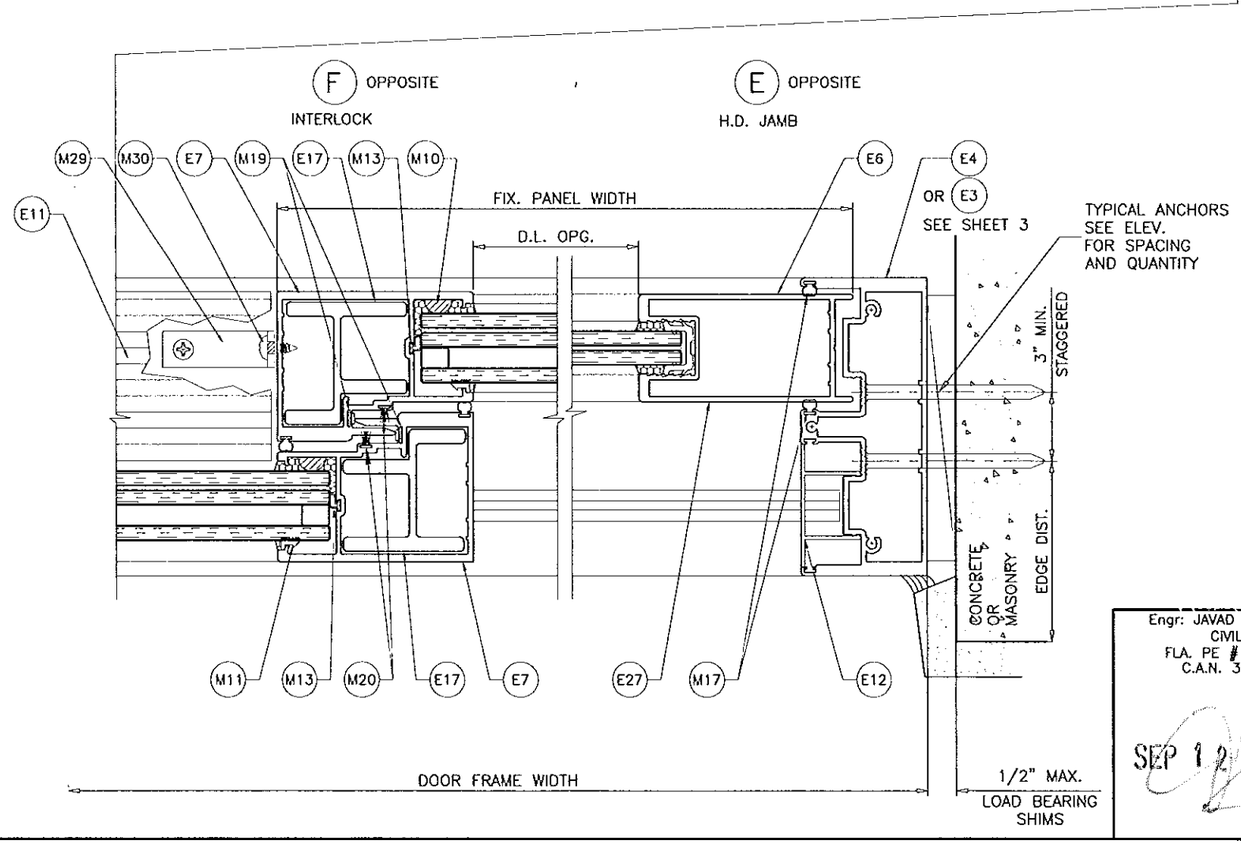

Approved as complying with the Florida Building Code
Date 9/19/13
NOA# 13-0115.05
Miami Dade Product Control
By

Engr: JAVAD AHMAD
CIVIL
FLA. PE # 70592
C.A.N. 3538

SEP 12 2013

AL-FAROOQ CORPORATION
ENGINEERS & PRODUCT DEVELOPMENT
1235 S.W. 87 AVE
MIAMI, FLORIDA 33174
TEL. (305) 264-8100 FAX. (305) 262-6978
COMP-ANL\W13-07ESW

SERIES ES-6500 ALUM SLIDING GLASS DOOR (L.M.I.)

E.S. WINDOWS, LLC
5220 N.W. 72 AVE. BAY #4
MIAMI, FL. 33166
TEL. (305) 624-7775 FAX. (305) 624-7777

revisions:

no	date	by	description
A	09.03.13		REV. PER RER COMMENTS

date: 03-17-13
scale: 3/8" = 1"
dr. by: TARIQ
chk. by:

drawing no.
W13-07

sheet 10 of 13

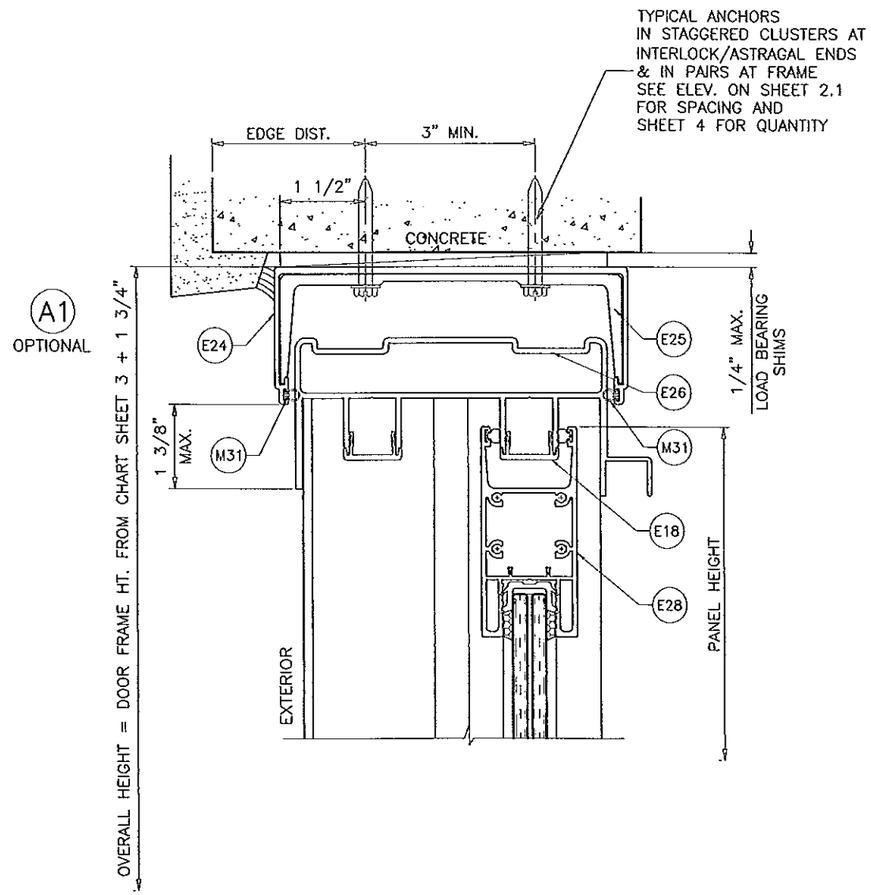

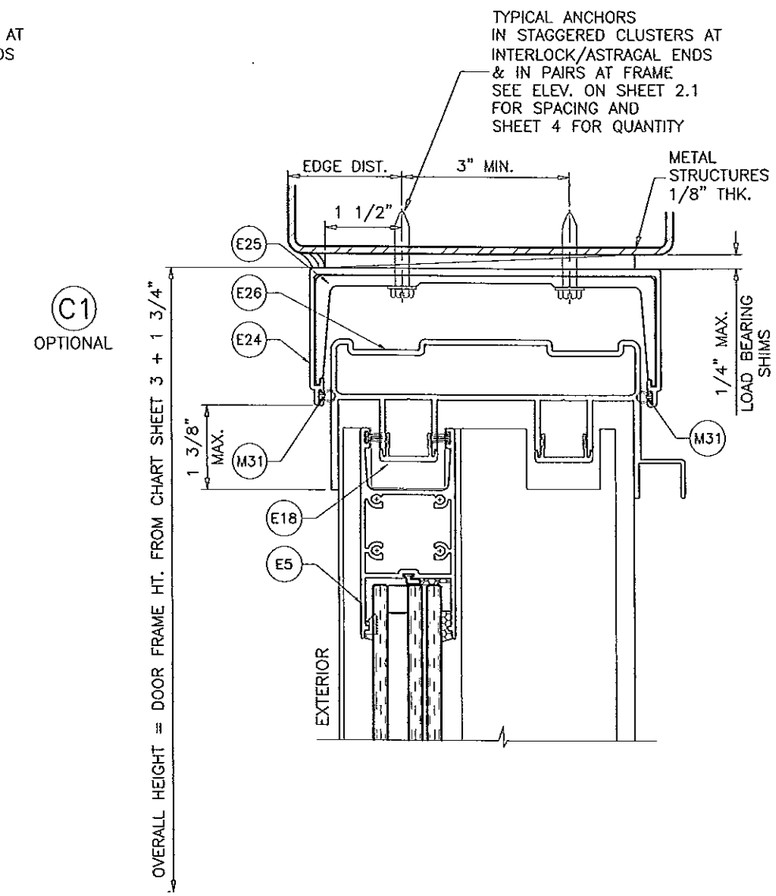

UNITS WITH HEAD RECEPTORS

HEAD RECEPTOR MOUNT SHOWN, SEE DETAIL IN SHEET 2.1

Approved as complying with the Florida Building Code
Date 9/9/13
NOC 13-0115.06
Miami-Dade Product Control
By

TYPICAL ANCHORS: SEE ELEV. FOR SPACING

— — — AT HEAD (FOR DOORS WITH RECEPTOR) — — —

TYPE 'AAA'– 5/16" DIA. ULTRACON BY 'ELCO' (Fu=177 KSI, Fy=155 KSI)
DIRECTLY INTO CONCRETE
1–3/4" MIN. EMBED

TYPE 'BBB'– 1/4" DIA. SELF DRILLING SCREWS (GRADE 5 CRS)
INTO MIAMI–DADE COUNTY APPROVED MULLIONS (1/8" THK. MIN.)
INTO METAL STRUCTURES
STEEL : 1/8" THK. MIN. (Fy = 36 KSI MIN.)
ALUMINUM : 1/8" THK. MIN. (6063–T5 MIN.)
(STEEL IN CONTACT WITH ALUMINUM TO BE PLATED OR PAINTED)

ANCHOR EDGE DISTANCES
INTO CONCRETE = 2–3/16" MIN.
INTO METAL STRUCTURE = 1–1/2" MIN.
CONCRETE AT HEAD/SILL f'c = 3000 PSI MIN.

Engr: JAVAD AHMAD
CIVIL
FLA. PE # 70592
C.A.N. 3538
SEP 12 2013

AL-FAROOQ CORPORATION
ENGINEERS & PRODUCT DEVELOPMENT
1235 S.W. 87 AVE
MIAMI, FLORIDA 33174
TEL. (305) 264-8100 FAX. (305) 262-6978
COMP–ANL\W13–07ESW

SERIES ES–6500 ALUM SLIDING GLASS DOOR (L.M.I.)

E.S. WINDOWS, LLC
5220 N.W. 72 AVE. BAY #4
MIAMI, FL. 33166
TEL. (305) 624–7775 FAX. (305) 624–7777

revisions:

no	date	by	description
A	09.03.13		REV. PER RER COMMENTS

date: 03–17–13
scale: 3/8" = 1"
dr. by: TARIQ
chk. by:

drawing no. W13–07

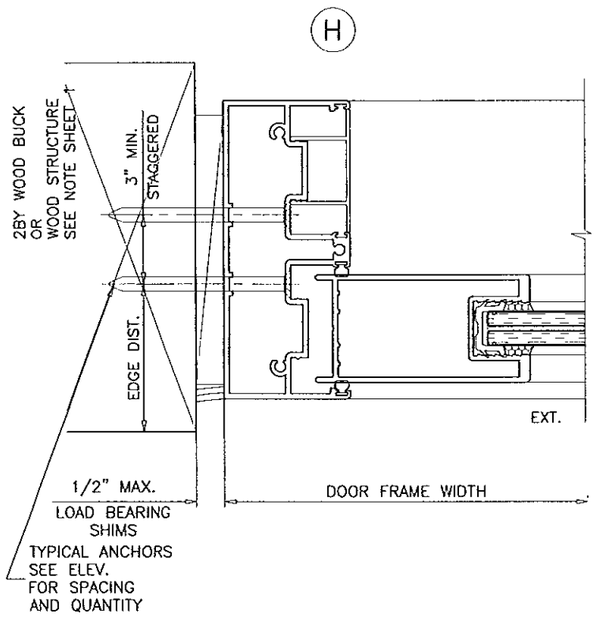

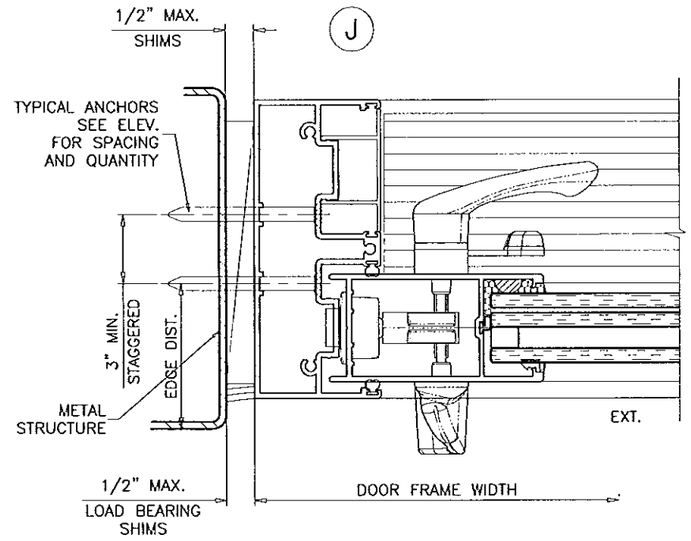

FIXED PANEL:
SEE HEAD/SILL CLIP ANGLE DETAIL ON SHEET 5 & 7

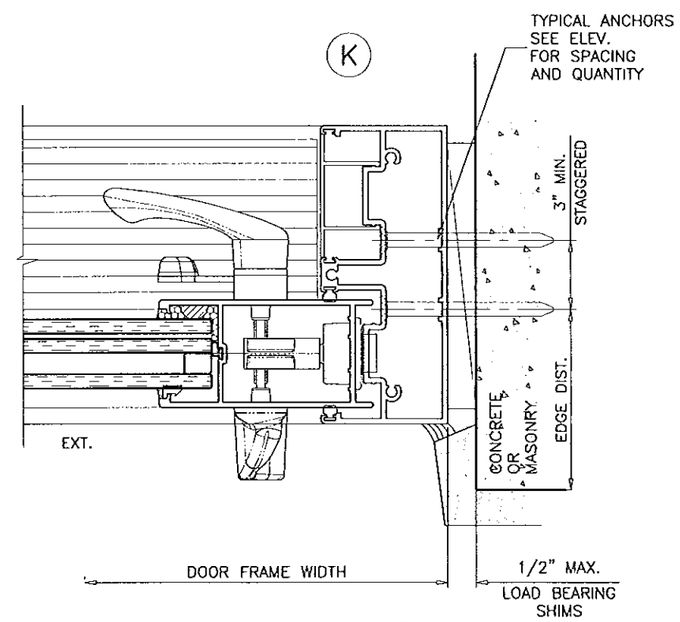

Approved as complying with the
Florida Building Code
Date 9/9/13
NOA# 12-0115.06
Miami Dade Product Control
By

Engr: JAVAD AHMAD
CIVIL
FLA. PE # 70592
C.A.N. 3538

SEP 12 2013

AL-FAROOQ CORPORATION
ENGINEERS & PRODUCT DEVELOPMENT
1235 S.W. 87 AVE
MIAMI, FLORIDA 33174
TEL. (305) 264-8100 FAX. (305) 262-6978
COMP-ANL\W13-07ESW

SERIES ES-6500 ALUM SLIDING GLASS DOOR (L.M.I.)

E.S. WINDOWS, LLC
5220 N.W. 72 AVE. BAY #4
MIAMI, FL. 33166
TEL. (305) 624-7775 FAX. (305) 624-7777

revisions:

no.	date	by	description
A	09.03.13		REV. PER RER COMMENTS

date: 03-17-13
scale: 3/8" = 1"
dr. by: TARIQ
chk. by:

drawing no.
W13-07

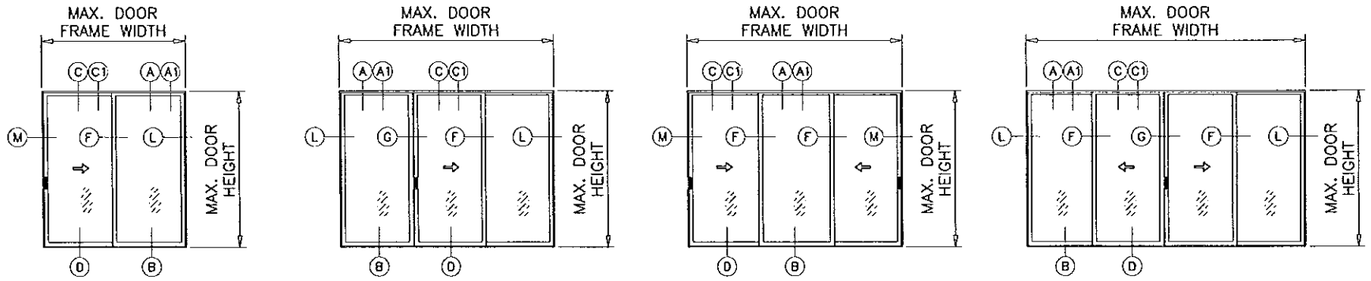

ANCHORS AT HEAD/SILL AND FREE JAMB ENDS
SEE ELEVATIONS ON SHEETS 2 & 2.1
(APPLICABLE TO ALL SIZES ON SHEET 3 AND CONFIGURATIONS ABOVE)

Approved as complying with the Florida Building Code
Date 9/19/13
NOA# 13-0115.05
Miami-Dade Product Control
By

DC-791 = 50% STRETCH
DC-795 = 100% STRETCH

ALLOWABLE LOADS FOR DOOR HEIGHTS VERSUS 50% OR 100% STRETCH SILICONES				
	1/4" MIN. GAP		3/8" MIN. GAP	
DOOR HEIGHT	50%	100%	50%	100%
96"	120 PSF	135 PSF	135 PSF	135 PSF
108"	--	135 PSF	135 PSF	135 PSF
120"	--	--	-	135 PSF
MAXIMUM GAP = 1/2" ALL CASES				

CHART APPLICABLE TO ALL SIZES, LOAD CAPACITIES AND CONFIGURATIONS AS SHOWN ON SHEETS 3, 4 AND 5.

NOTE:
DATA IN THIS SHEET MAY BE USED TO QUALIFY SEALANT TO BE USED AT UNANCHORED JAMBS.
PLEASE REFER TO SEALANT MANUFACTURER'S DATA AND APPLICATION MANUAL FOR COMPATABILITY OF SEALANT TO SUBSTRATE & DOOR MATERIAL FINISH AND COMPLIANCE FOR WARRANTY. (UNDER SEPARATE REVIEW)

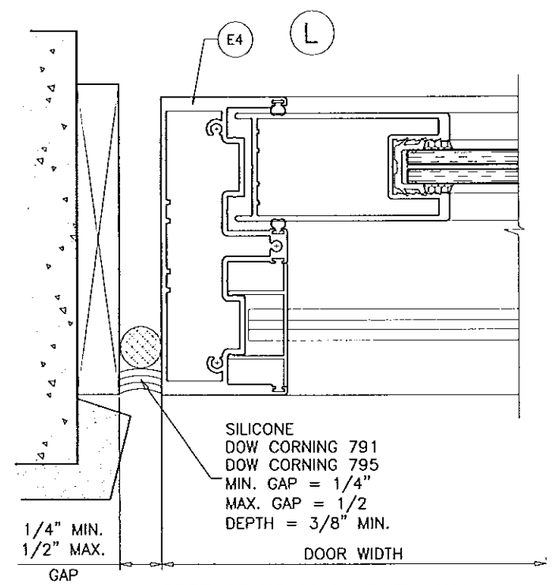

FREE STANDING H. DUTY JAMB
FIXED SIDE

Ix IN^4	Sx IN^3
8.895	3.387

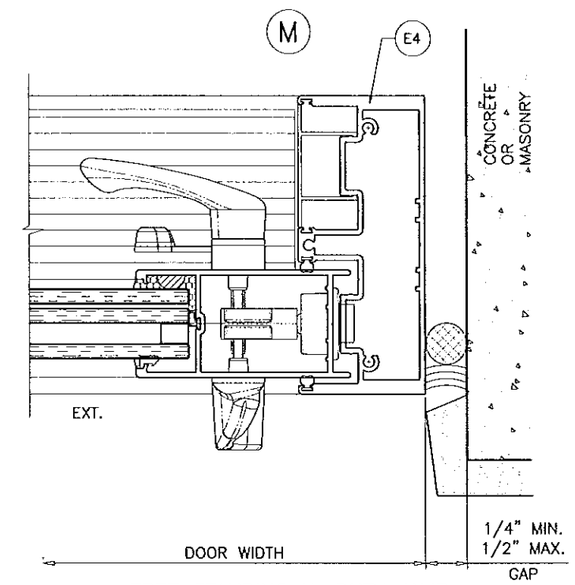

FREE STANDING H. DUTY JAMB
OPERABLE SIDE

FIXED PANEL:
SEE HEAD/SILL CLIP ANGLE DETAIL ON SHEET 5 & 7

Engr: JAVAD AHMAD
CIVIL
FLA. PE # 70592
C.A.N. 3538
SEP 12 2013

AL-FAROOQ CORPORATION
ENGINEERS & PRODUCT DEVELOPMENT
1235 S.W. 87 AVE
MIAMI, FLORIDA 33174
TEL. (305) 264-8100 FAX. (305) 262-6978

COMP-ANL\W13-07ESW

SERIES ES-6500 ALUM SLIDING GLASS DOOR (L.M.I.)

E.S. WINDOWS, LLC
5220 N.W. 72 AVE. BAY #4
MIAMI, FL. 33166
TEL. (305) 624-7775 FAX. (305) 624-7777

revisions:

no	date	by	description
A	09.03.13	RER	REV. PER COMMENTS

date: 03-17-13
scale: 3/8" = 1"
dr. by: TARIQ
chk. by:

drawing no.
W13-07

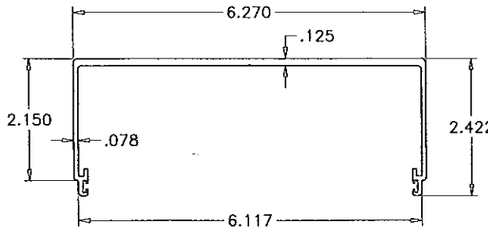

E24 HEAD RECEPTOR

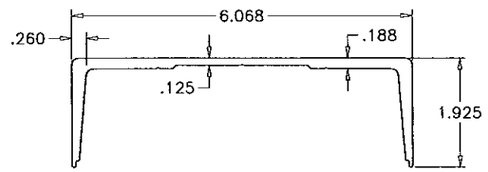

E25 RECEPTOR STIFFENER

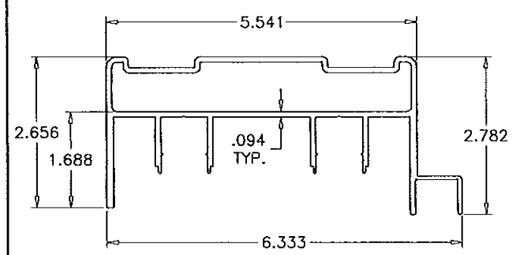

E26 FRAME HEAD AT RECEPTOR

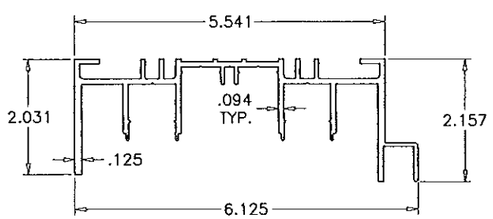

E1 STANDARD FRAME HEAD (WITHOUT HEAD RECEPTOR)

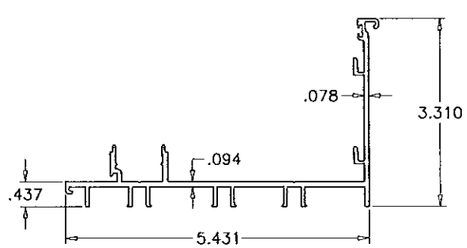

E2 FRAME SILL

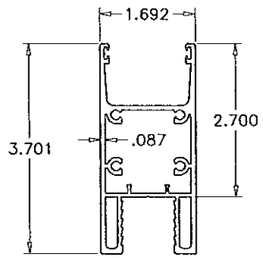

E28 PANEL TOP & BOTTM RAIL (LAM. GLASS)

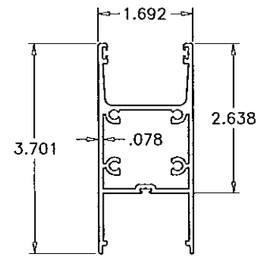

E5 PANEL TOP & BOTTM RAIL (INSUL. LAM. GLASS)

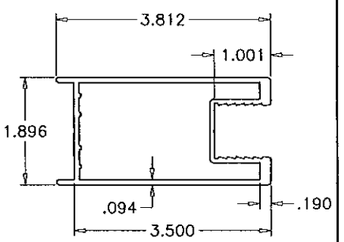

E27 PANEL LOCK STILE (LAM. GLASS)

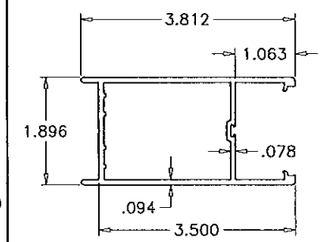

E6 PANEL LOCK STILE (INSUL. LAM. GLASS)

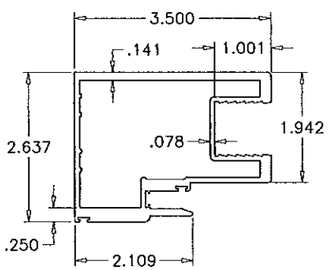

E29 PANEL INTERLOCK (LAM. GLASS)

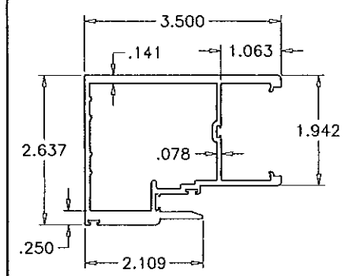

E7 PANEL INTERLOCK (INSUL. LAM. GLASS)

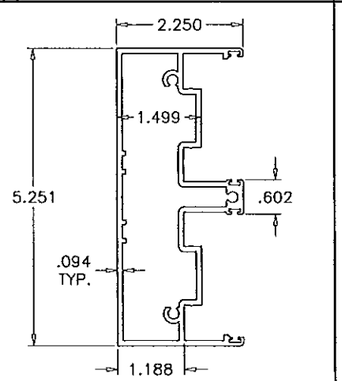

E3 STD. FRAME JAMB LIMIT MAX. LOADS ±85 PSF

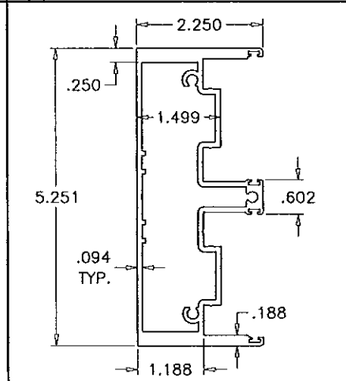

E4 H.D. FRAME JAMB

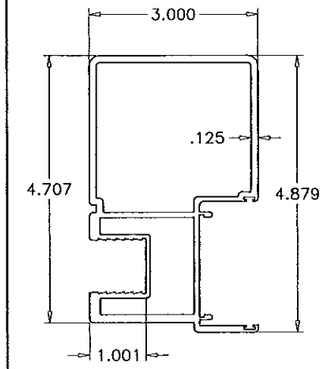

E31 ASTRAGAL (LAM. GLASS)

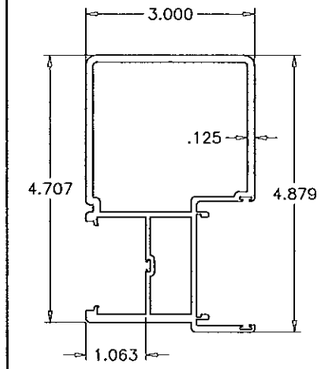

E8 ASTRAGAL (INSUL. LAM. GLASS)

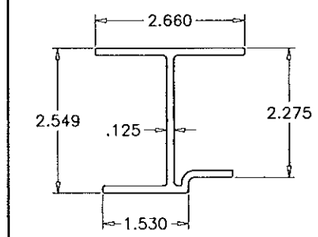

E16 ASTRAGAL STIFFENER

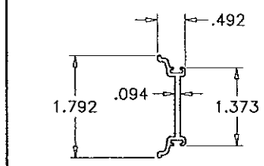

E9 ASTRAGAL ADAPTER

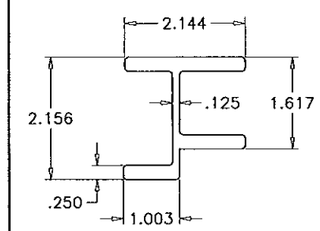

E17 INTERLOCK STIFFENER

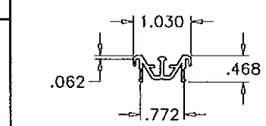

E13 TRACK INSERT

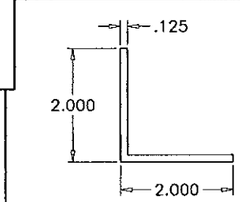

M29 INTERLOCK STIFFENER

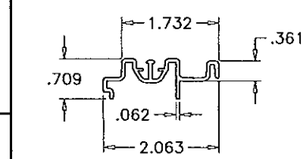

E10 ADD-ON TRACK

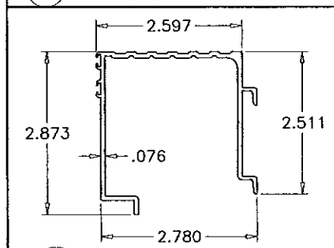

E11 THRESHOLD

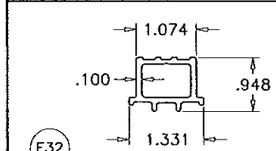

E32 FIX. PANEL BOTTOM GUIDE

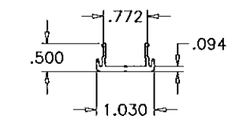

E18 HEAD COVER

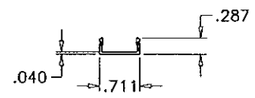

E22 SCREW COVER

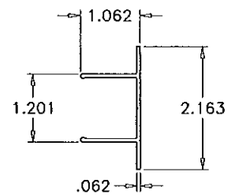

E12 JAMB COVER

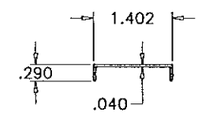

E30 SILL SCREW COVER

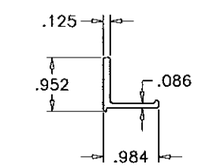

E14 RETAINER CLIP

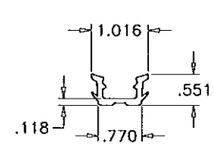

M7 GLAZING GASKET

Engr: JAVAD AHMAD
CIVIL
FLA. PE # 70592
C.A.N. 3538

SEP 12 2013

Approved as complying with the Florida Building Code
Date 9/19/13
NOAA 13-0115.05
Miami-Dade Product Control
By

AL-FAROOQ CORPORATION
ENGINEERS & PRODUCT DEVELOPMENT
1235 S.W. 87 AVE
MIAMI, FLORIDA 33174
TEL. (305) 264-8100 FAX. (305) 262-6978

COMP-ANL\W13-07ESW

SERIES ES-6500 ALUM SLIDING GLASS DOOR (L.M.I.)

E.S. WINDOWS, LLC
5220 N.W. 72 AVE. BAY #4
MIAMI, FL. 33166
TEL. (305) 624-7775 FAX. (305) 624-7777

revisions:

no	date	by	description
A	09.03.13	REV. PER RER COMMENTS	

date: 03-17-13
scale: 3/8" = 1"
dr. by: TARIQ
chk. by:

drawing no. W13-07

sheet 12 of 13

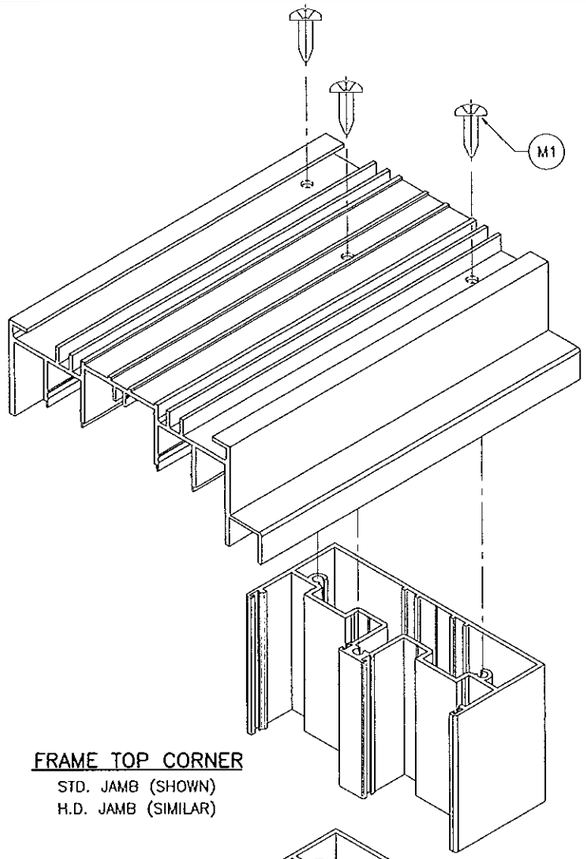

FRAME TOP CORNER
STD. JAMB (SHOWN)
H.D. JAMB (SIMILAR)

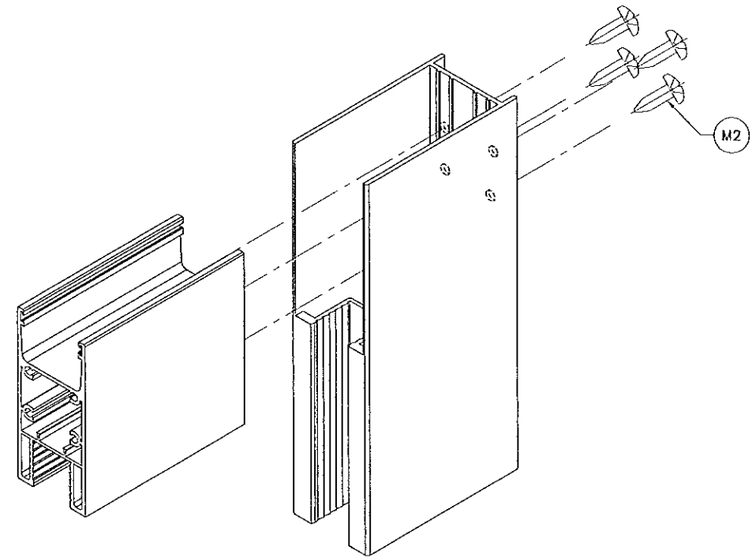

PANEL TOP/BOTTOM CORNER
LAM. GLASS RAIL & STILE (SHOWN)
INSUL. LAM. GLASS RAIL & STILE (SIMILAR)

Approved as complying with the
Florida Building Code
Date SEP 19 2013
NOAC 13-0115.05
Miami-Dade Product Control
By

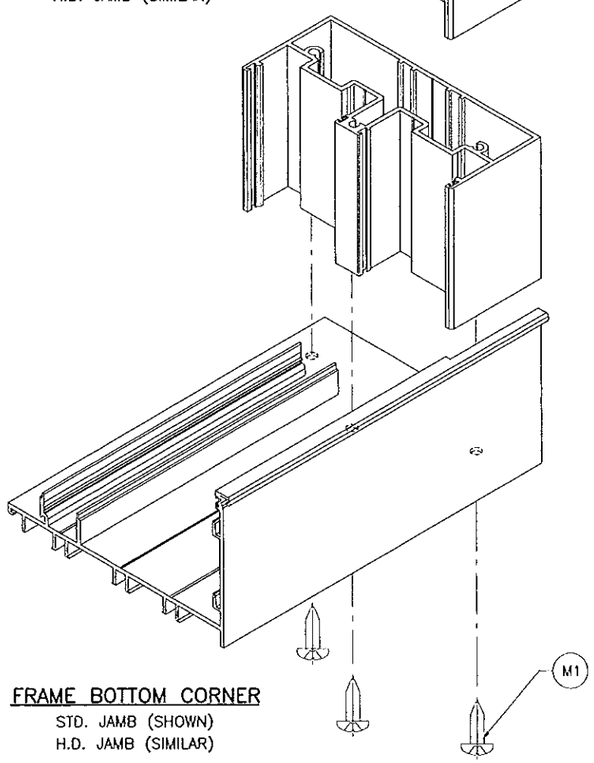

FRAME BOTTOM CORNER
STD. JAMB (SHOWN)
H.D. JAMB (SIMILAR)

Engr: JAVAD AHMAD
CIVIL
FLA. PE # 70592
C.A.N. 3538

SEP 12 2013

AL-FAROOQ CORPORATION
ENGINEERS & PRODUCT DEVELOPMENT
1235 S.W. 87 AVE
MIAMI, FLORIDA 33174
TEL. (305) 264-8100 FAX. (305) 262-6978
COMP-ANL\W13-07ESW

SERIES ES-6500 ALUM SLIDING GLASS DOOR (L.M.I.)

E.S. WINDOWS, LLC
5220 N.W. 72 AVE. BAY #4
MIAMI, FL. 33166
TEL. (305) 624-7775 FAX. (305) 624-7777

revisions:

no	date	by	description
A	09.03.13		NO CHANGE THIS SHEET

date: 03-17-13
scale: 3/8" = 1"
dr. by: TARIQ
chk. by:

drawing no.
W13-07

sheet 13 of 13