MIAMI-DADE COUNTY
DEPARTMENT OF REGULATORY AND ECONOMIC RESOURCES (RER)
BOARD AND CODE ADMINISTRATION DIVISION

MIAMI-DADE COUNTY
PRODUCT CONTROL SECTION
11805 SW 26 Street, Room 208
T (786) 315-2590 F (786) 315-2599
www.miamidade.gov/economy

# NOTICE OF ACCEPTANCE (NOA)

**ES Windows, LLC**
**10653 NE Quaybridge Ct.**
**Miami, FL 33138**

**SCOPE:**

This NOA is being issued under the applicable rules and regulations governing the use of construction materials. The documentation submitted has been reviewed and accepted by Miami-Dade County RER - Product Control Section to be used in Miami Dade County and other areas where allowed by the Authority Having Jurisdiction (AHJ).

This NOA shall not be valid after the expiration date stated below. The Miami-Dade County Product Control Section (In Miami Dade County) and/or the AHJ (in areas other than Miami Dade County) reserve the right to have this product or material tested for quality assurance purposes. If this product or material fails to perform in the accepted manner, the manufacturer will incur the expense of such testing and the AHJ may immediately revoke, modify, or suspend the use of such product or material within their jurisdiction. RER reserves the right to revoke this acceptance, if it is determined by Miami-Dade County Product Control Section that this product or material fails to meet the requirements of the applicable building code.

This product is approved as described herein, and has been designed to comply with the Florida Building Code, including the High Velocity Hurricane Zone.

**DESCRIPTION: Series "8000" Aluminum Window Wall System – L.M.I.**

**APPROVAL DOCUMENT:** Drawing No. **W07–60**, titled "Series 8000 Alum. Window Wall System (L.M.I.)", sheets 1 through 12 of 12, dated 08/03/07, with revision B dated 03/05/12, prepared by Al–Farooq Corporation, signed and sealed by Javad Ahmad, P.E., bearing the Miami–Dade County Product Control Renewal stamp with the Notice of Acceptance number and expiration date by the Miami–Dade County Product Control Section.

**MISSILE IMPACT RATING: Large and Small Missile Impact Resistant**

**LABELING:** Each unit shall bear a permanent label with the manufacturer's name or logo, city, state, model/series, and following statement: "Miami-Dade County Product Control Approved", unless otherwise noted herein.

**RENEWAL** of this NOA shall be considered after a renewal application has been filed and there has been no change in the applicable building code negatively affecting the performance of this product.

**TERMINATION** of this NOA will occur after the expiration date or if there has been a revision or change in the materials, use, and/or manufacture of the product or process. Misuse of this NOA as an endorsement of any product, for sales, advertising or any other purposes shall automatically terminate this NOA. Failure to comply with any section of this NOA shall be cause for termination and removal of NOA.

**ADVERTISEMENT:** The NOA number preceded by the words Miami-Dade County, Florida, and followed by the expiration date may be displayed in advertising literature. If any portion of the NOA is displayed, then it shall be done in its entirety.

**INSPECTION:** A copy of this entire NOA shall be provided to the user by the manufacturer or its distributors and shall be available for inspection at the job site at the request of the Building Official.

This NOA **renews NOA# 12-0308.36** and consists of this page 1 and evidence pages E-1 and E-2, as well as approval document mentioned above.

The submitted documentation was reviewed by **Manuel Perez, P.E.**

MIAMI-DADE COUNTY APPROVED

3/27/13

**ES Windows, LLC**

## NOTICE OF ACCEPTANCE: EVIDENCE SUBMITTED

**A. DRAWINGS**

1. Manufacturer's die drawings and sections.
   ***(Submitted under NOA No. 08–0204.06)***
2. Drawing No. **W07–60**, titled "Series 8000 Alum. Window Wall System (L.M.I.)", sheets 1 through 12 of 12, dated 08/03/07, with revision B dated 03/05/12, prepared by Al–Farooq Corporation, signed and sealed by Javad Ahmad, P.E.
   ***(Submitted under previous NOA No. 12–0308.36)***

**B. TESTS**

1. Test reports on: 1) Air Infiltration Test, per FBC, TAS 202–94
   2) Uniform Static Air Pressure Test, Loading per FBC TAS 202–94
   3) Water Resistance Test, per FBC, TAS 202–94
   4) Large Missile Impact Test per FBC, TAS 201–94
   5) Cyclic Wind Pressure Loading per FBC, TAS 203–94
   6) Drop Load Test, per CPSC 16 CFR 1201 Category II (G.32)

   along with marked–up drawings and installation diagram of an aluminum window wall system, prepared by Fenestration Testing Laboratory, Inc., Test Report No. **FTL–5447**, dated 12/19/07, signed and sealed by Michael R. Wenzel, P. E.
   ***(Submitted under NOA No. 08–0204.06)***

**C. CALCULATIONS**

1. Anchor verification calculations and structural analysis, complying with FBC, prepared by Al–Farooq Corporation, dated 09/02/08, signed and sealed by Humayoun Farooq, P. E.
   ***(Submitted under NOA No. 08–0204.06)***
2. Glazing complies with ASTM E1300-04

**D. QUALITY ASSURANCE**

1. Miami-Dade Department of Regulatory and Economic Resources (RER)

**E. MATERIAL CERTIFICATIONS**

1. Notice of Acceptance No. **11–0624.01** issued to **E.I. DuPont DeNemours & Co., Inc.** for their **"DuPont Butacite® PVB Interlayer"** dated 09/08/11, expiring on 12/11/16.
2. Notice of Acceptance No. **11–0624.02** issued to **E.I. DuPont DeNemours & Co., Inc.** for their **"DuPont SentryGlas® Interlayer"** dated 08/25/11, expiring on 01/14/17.

**Manuel Perez, P.E.**
**Product Control Examiner**
**NOA No. 13-0115.06**
**Expiration Date: April 03, 2018**
**Approval Date: April 04, 2013**

## NOTICE OF ACCEPTANCE: EVIDENCE SUBMITTED

**F. STATEMENTS**

1. Statement letter of conformance, complying with the FBC–2010, dated 12/19/12, signed and sealed by Javad Ahmad, P.E.
2. Statement letter of no financial interest, conformance and compliance with the FBC–2010, dated 03/05/12, signed and sealed by Javad Ahmad, P.E.
   ***(Submitted under previous NOA No. 12–0308.36)***
3. Distributor Agreement between, E.S. Windows – Energia Solar S.A., Barranquilla, Colombia and E.S. Windows, LLC, Miami, Florida, U.S.A., dated 10/20/10, signed by Carla Garcia Torrente and by Andres Chamorro, respectively.
   ***(Submitted under previous NOA No. 12–0308.36)***
4. Private Labeling Agreement document in conformance to BCCO guidelines dated 04/09/09 signed by Jose Nuñez.
   ***(Submitted under previous NOA No. 12–0308.36)***
5. Laboratory compliance letter for Test Report No. **FTL–5447**, issued by Fenestration Testing Laboratory, Inc., dated 12/19/07, signed and sealed by Michael R. Wenzel, P.E.
   ***(Submitted under NOA No. 08–0204.06)***

**G. OTHERS**

1. Notice of Acceptance No. **12–0308.36**, issued to ES Windows, LLC for their "Series "8000" Aluminum Window Wall System – L.M.I.", approved on 05/24/12 and expiring on 04/03/13.

**Manuel Perez, P.E.**
**Product Control Examiner**
**NOA No. 13-0115.06**
**Expiration Date: April 03, 2018**
**Approval Date: April 04, 2013**

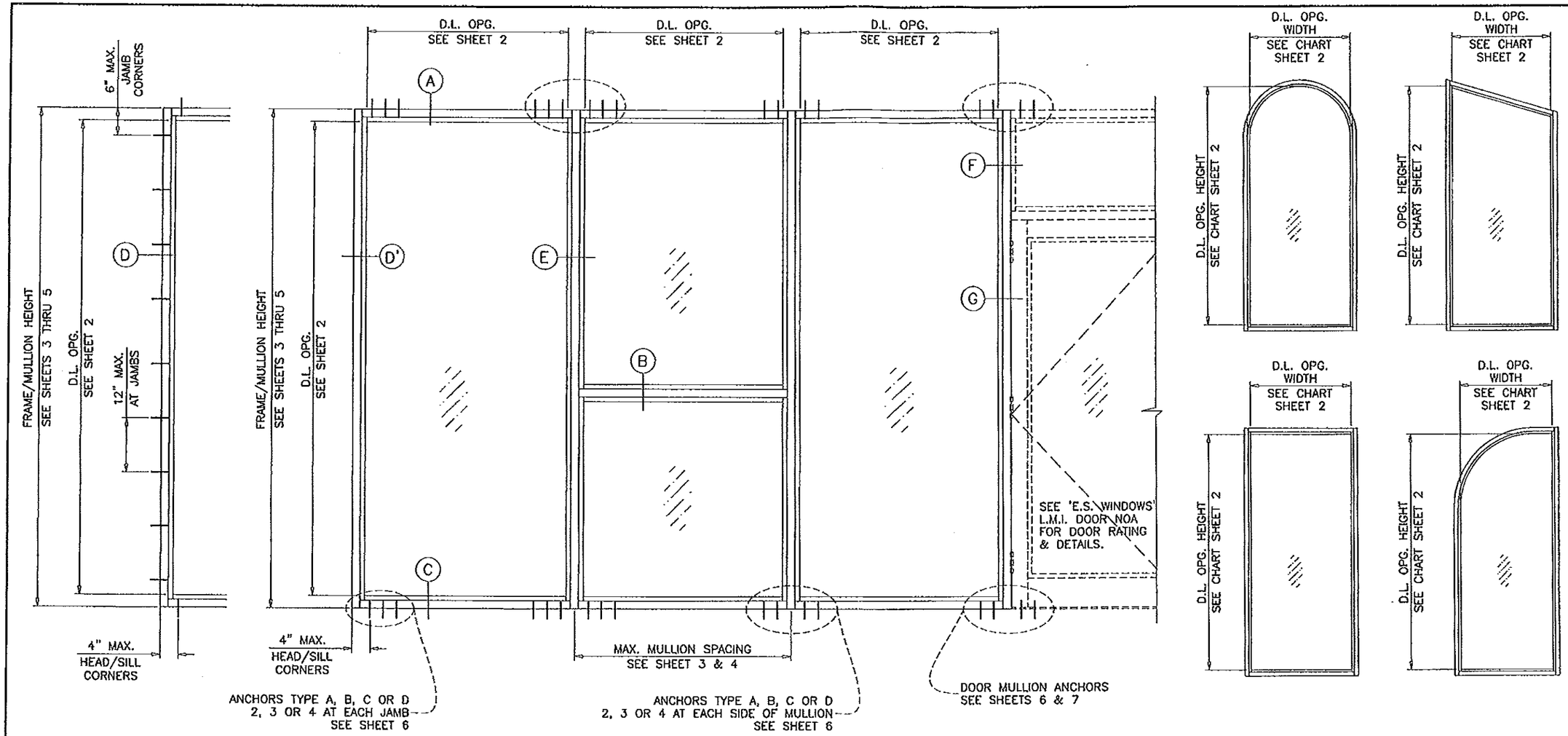


TYPICAL ELEVATION

ALLOWABLE LOADS FOR ALTERNATE SHAPES AS SHOWN ABOVE OR SIMILAR CAN BE VERIFIED BY INSCRIBING PICTURE WINDOW SHAPE WITHIN SQUARE OR RECTANGLE AS SHOWN IN DOTTED LINES AND OBTAINING ALLOWABLE LOADS FROM THOSE SHAPES. SINGLE LITES MAY BE INSTALLED VERTICALLY AS SHOWN ABOVE OR HORIZONTALLY.

## SERIES 8000 ALUMINUM WINDOW WALL SYSTEM

THIS SYSTEM IS RATED FOR LARGE MISSILE IMPACT SHUTTERS ARE NOT REQUIRED.

CODE REQUIREMENTS FOR SAFEGUARDS MUST BE OBSERVED.

---

THIS PRODUCT HAS BEEN DESIGNED AND TESTED TO COMPLY WITH THE REQUIREMENTS OF THE FLORIDA BUILDING CODE INCLUDING HIGH VELOCITY HURRICANE ZONE (HVHZ).

WOOD BUCKS BY OTHERS, MUST BE ANCHORED PROPERLY TO TRANSFER LOADS TO THE STRUCTURE.

ANCHORS SHALL BE AS LISTED, SPACED AS SHOWN ON DETAILS, ANCHORS EMBEDMENT TO BASE MATERIAL SHALL BE BEYOND WALL DRESSING OR STUCCO.

ANCHORING OR LOADING CONDITIONS NOT SHOWN IN THESE DETAILS ARE NOT PART OF THIS APPROVAL.

A LOAD DURATION INCREASE IS USED IN DESIGN OF ANCHORS INTO WOOD ONLY.

MATERIALS INCLUDING BUT NOT LIMITED TO STEEL/METAL SCREWS, THAT COME INTO CONTACT WITH OTHER DISSIMILAR MATERIALS SHALL MEET THE REQUIREMENTS OF THE FLORIDA BLDG. CODE SECTION 2003.8.4.

## INSTRUCTIONS:

USE CHARTS AS FOLLOWS.

STEP 1 DETERMINE DESIGN WIND LOAD REQUIREMENT BASED ON WIND VELOCITY, BLDG. HEIGHT, WIND ZONE USING APPLICABLE ASCE 7 STANDARD.

STEP 2 SEE CHARTS ON SHEET 2 FOR DESIGN LOAD CAPACITY OF DESIRED GLASS SIZE.

STEP 3 CHECK MULLION CAPACITY FOR A GIVEN SPACING AND HEIGHT USING CHARTS ON SHEETS 3 THRU 7 THE CAPACITY SHOULD EXCEED THE DESIGN LOAD.

STEP 4 USING CHARTS ON SHEETS 6 & 7 SELECT ANCHOR OPTION WITH DESIGN RATING MORE THAN DESIGN LOAD SPECIFIED IN STEP 1 ABOVE.

STEP 5 THE LOWEST VALUE RESULTING FROM STEPS 2, 3 AND 4 SHALL APPLY TO ENTIRE SYSTEM.

PRODUCT COMPLIES WITH REQUIREMENTS OF ANSI Z97.1.

LAMINATED GLASS
LARGE MISSILE IMPACT

PRODUCT RENEWED
as complying with the Florida Building Code
Acceptance No. 13-0115.06
Expiration Date April 3, 2018
By Manuel Perez
Miami Dade Product Control

Engr: JAVAD AHMAD
CIVIL
FLA. PE # 70592.
C.A.N. 3538

PRODUCT REVISED
as complying with the Florida Building Code
Acceptance No 12-0308.36
Expiration Date 04/03/2013
By
Miami Dade Product Control
MAR 07 2012


AL-FAROOQ CORPORATION
ENGINEERS & PRODUCT DEVELOPMENT
1235 S.W. 87 AVE
MIAMI, FLORIDA 33174
TEL. (305) 264-8100 FAX. (305) 262-6978
STORE\W07-60ES


SERIES 8000 ALUM WINDOW WALL SYSTEM (L.M.I.)

E.S. WINDOWS, LLC
5220 N.W. 72 AVE. BAY #4
MIAMI, FL. 33166
TEL. (305) 624-7775 FAX. (305) 624-7777

| revisions: | | | |
|---|---|---|---|
| no | date | by | description |
| A | 09.03.08 | | DOOR MULLION ADDED |
| B | 03.05.12 | | UPDATED TO 2010 FBC |

date: 08-03-07
scale: 1/2"=1'-0"
dr. by: HAMID
chk. by:

drawing no.
W07-60

| GLASS LOAD CAPACITY - PSF | | | |
|---|---|---|---|
| NOMINAL DIMS. | | GLASS TYPE 'A' | GLASS TYPE 'B' |
| D.L.O. WIDTH | D.L.O. HEIGHT | EXT.(+)/INT.(-) | EXT.(+)/INT.(-) |
| 28" | 84-1/2" | 80.0 | 130.0 |
| 32" | | 80.0 | 130.0 |
| 36" | | 80.0 | 130.0 |
| 40" | | 80.0 | 130.0 |
| 44-1/4" | | 80.0 | 130.0 |
| 48" | | 80.0 | 130.0 |
| 52" | | 80.0 | 130.0 |
| 56-1/4" | | 80.0 | 130.0 |
| 28" | 90-1/2" | 80.0 | 130.0 |
| 32" | | 80.0 | 130.0 |
| 36" | | 80.0 | 130.0 |
| 40" | | 80.0 | 130.0 |
| 44-1/4" | | 80.0 | 130.0 |
| 48" | | 80.0 | 130.0 |
| 52" | | 80.0 | 130.0 |
| 28" | 96-1/2" | 80.0 | 130.0 |
| 32" | | 80.0 | 130.0 |
| 36" | | 80.0 | 130.0 |
| 40" | | 80.0 | 130.0 |
| 44-1/4" | | 80.0 | 130.0 |
| 48" | | 80.0 | 130.0 |
| 52" | | 80.0 | 127.2 |
| 28" | 102-1/2" | 80.0 | 130.0 |
| 32" | | 80.0 | 130.0 |
| 36" | | 80.0 | 130.0 |
| 40" | | 80.0 | 130.0 |
| 44-1/4" | | 80.0 | 130.0 |
| 48" | | 80.0 | 128.9 |
| 28" | 108-1/2" | 80.0 | 130.0 |
| 32" | | 80.0 | 130.0 |
| 36" | | 80.0 | 130.0 |
| 40" | | 80.0 | 130.0 |
| 44-1/4" | | 80.0 | 130.0 |
| 28" | 114-1/2" | 80.0 | 130.0 |
| 32" | | 80.0 | 130.0 |
| 36" | | 80.0 | 130.0 |
| 40" | | 80.0 | 130.0 |
| 44-1/4" | | 80.0 | 130.0 |

NOTE:
GLASS CAPACITIES ON THIS SHEET ARE BASED ON ASTM E1300-04 (3 SEC. GUSTS).

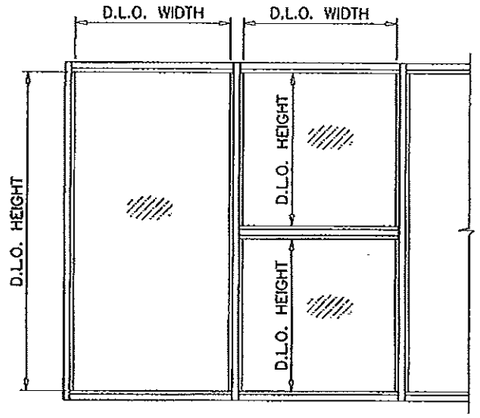


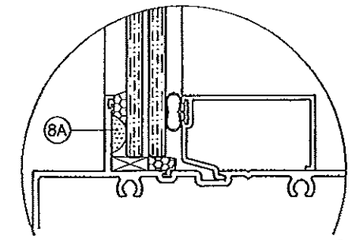


ALTERNATE BUTTON BUMPER (8A)
IN LIEU OF VINYL SPACER (8)

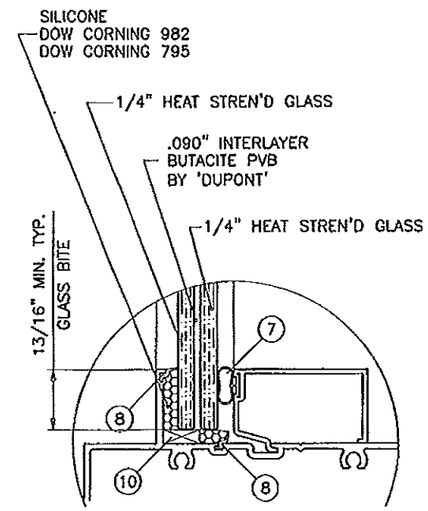


GLASS TYPE 'A'

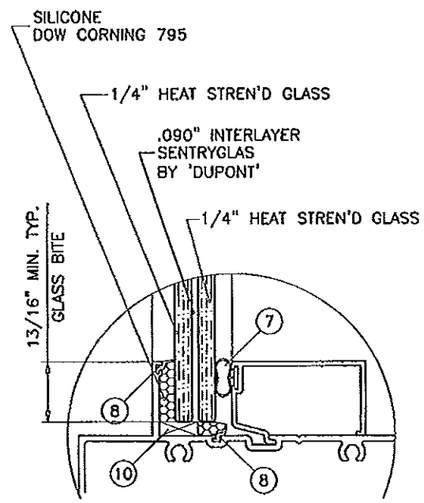


GLASS TYPE 'B'

GLAZING OPTIONS

PRODUCT RENEWED
as complying with the Florida
Building Code
Acceptance No 13-0115.06
Expiration Date April 3, 2018
By
Miami Dade Product Control

GLASS

Engr: JAVAD AHMAD
CIVIL
FLA. PE # 70592
C.A.N. 3538

MAR 07 2012

PRODUCT REVISED
as complying with the Florida
Building Code
Acceptance No 12-0308.36
Expiration Date 04/03/2013
By
Miami Dade Product Control


AL-FAROOQ CORPORATION
ENGINEERS & PRODUCT DEVELOPMENT
1235 S.W. 87 AVE
MIAMI, FLORIDA 33174
TEL. (305) 264-8100 FAX. (305) 262-6978


STORE\W07-60ES

SERIES 8000 ALUM WINDOW WALL SYSTEM (L.M.I.)

E.S. WINDOWS, LLC
5220 N.W. 72 AVE. BAY #4
MIAMI, FL. 33166
TEL. (305) 624-7775 FAX. (305) 624-7777

| revisions: | | | |
|---|---|---|---|
| no | date | by | description |
| A | 09.03.08 | | GLAZING DETAIL ADDED |
| B | 03.05.12 | | UPDATED TO 2010 FBC |

date: 08-03-07
scale: 1/2"=1'-0"
dr. by: HAMID
chk. by:

drawing no.
W07-60

## MULLION LOAD CAPACITY – PSF
## MULLIONS WITHOUT INTERMEDIATE HORIZONTALS

| NOMINAL DIMS. | | JAMB 'J1' MULL 'M1' | JAMB 'J1' MULL 'M2' | JAMB 'J2' JAMB 'J3' MULL 'M3' | JAMB 'J3' MULL 'M4, | UNANCHORED JAMB OPTIONS MULL OPTIONS |
|---|---|---|---|---|---|---|
| WIDTH (W) | FRAME HEIGHT | EXT. (+) INT. (–) | EXT. (+) INT. (–) | EXT. (+) INT. (–) | EXT. (+) INT. (–) | |
| 30" | 86-1/2" | 130.0 | 130.0 | 130.0 | 130.0 | |
| 36" | | 130.0 | 130.0 | 130.0 | 130.0 | |
| 42" | | 130.0 | 130.0 | 130.0 | 130.0 | |
| 48" | | 130.0 | 130.0 | 130.0 | 130.0 | |
| 54" | | 130.0 | 130.0 | 130.0 | 130.0 | |
| 60" | | 130.0 | 130.0 | 130.0 | 130.0 | |
| 30" | 90" | 130.0 | 130.0 | 130.0 | 130.0 | |
| 36" | | 130.0 | 130.0 | 130.0 | 130.0 | |
| 42" | | 130.0 | 130.0 | 130.0 | 130.0 | |
| 48" | | 130.0 | 130.0 | 130.0 | 130.0 | |
| 54" | | 121.7 | 130.0 | 130.0 | 130.0 | |
| 60" | | 113.7 | 130.0 | 130.0 | 130.0 | |
| 30" | 96" | 130.0 | 130.0 | 130.0 | 130.0 | |
| 36" | | 130.0 | 130.0 | 130.0 | 130.0 | |
| 42" | | 119.9 | 130.0 | 130.0 | 130.0 | |
| 48" | | 107.5 | 130.0 | 130.0 | 130.0 | |
| 54" | | 98.4 | 130.0 | 127.9 | 130.0 | |
| 60" | | 91.5 | 130.0 | 118.4 | 130.0 | |
| 30" | 98-1/2" | 130.0 | 130.0 | 130.0 | 130.0 | |
| 36" | | 126.4 | 130.0 | 130.0 | 130.0 | |
| 42" | | 110.5 | 130.0 | 130.0 | 130.0 | |
| 48" | | 99.0 | 130.0 | 130.0 | 130.0 | |
| 54" | | 90.5 | 130.0 | 120.8 | 130.0 | |
| 58" | | 85.9 | 130.0 | 114.4 | 130.0 | |
| 30" | 102" | 130.0 | 130.0 | 130.0 | 130.0 | |
| 36" | | 113.4 | 130.0 | 130.0 | 130.0 | |
| 42" | | 99.0 | 130.0 | 130.0 | 130.0 | |
| 48" | | 88.6 | 130.0 | 123.2 | 130.0 | |
| 54" | | 80.7 | 129.9 | 111.8 | 130.0 | |
| 56" | | 78.6 | 126.4 | 108.7 | 129.9 | |
| 30" | 108" | 112.4 | 130.0 | 130.0 | 130.0 | |
| 36" | | 95.0 | 130.0 | 130.0 | 130.0 | |
| 42" | | 82.8 | 130.0 | 122.5 | 130.0 | |
| 48" | | 73.8 | 118.8 | 108.9 | 130.0 | |
| 53" | | 68.1 | 109.6 | 100.2 | 119.7 | |
| 30" | 110-1/2" | 104.8 | 130.0 | 130.0 | 130.0 | |
| 36" | | 88.5 | 130.0 | 130.0 | 130.0 | |
| 42" | | 77.1 | 123.9 | 116.8 | 130.0 | |
| 48" | | 68.7 | 110.5 | 103.7 | 124.0 | |
| 52" | | 64.3 | 103.4 | 96.9 | 115.8 | |
| 30" | 114" | 95.3 | 130.0 | 130.0 | 130.0 | |
| 36" | | 80.4 | 129.3 | 126.1 | 130.0 | |
| 42" | | 69.9 | 112.5 | 109.4 | 130.0 | |
| 48" | | 62.3 | 100.1 | 97.1 | 116.0 | |
| 50" | | 60.1 | 96.7 | 93.7 | 112.0 | |
| 30" | 120" | 81.5 | 130.0 | 130.0 | 130.0 | |
| 36" | | 68.6 | 110.4 | 113.5 | 130.0 | |
| 42" | | 59.6 | 95.9 | 98.3 | 117.5 | |
| 48" | | 53.0 | 85.2 | 87.1 | 104.1 | |

NOTE:
INTERPOLATION BETWEEN WIDTHS ALLOWED.

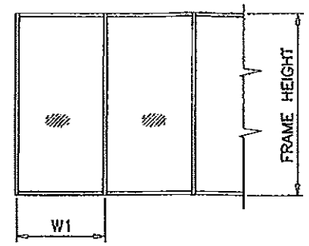


WIDTH (W) = W1
AT FRAME JAMB

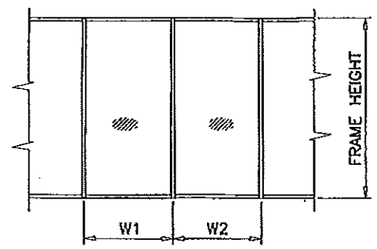


WIDTH (W) = $\frac{W1 + W2}{2}$
AT FRAME MULLION

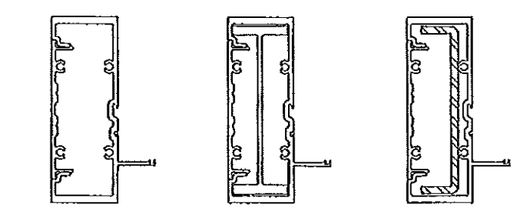

JAMB 'J1' JAMB 'J2' JAMB 'J3'

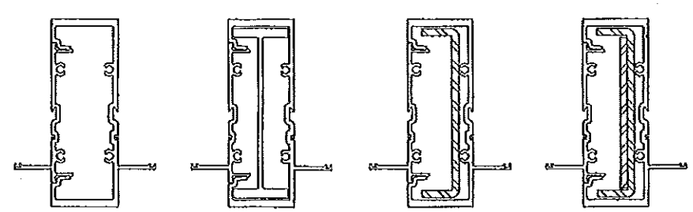

MULLION 'M1' MULLION 'M2' MULLION 'M3' MULLION 'M4'

MULLIONS

Engr: JAVAD AHMAD
CIVIL
FLA. PE # 70592
C.A.N. 3538

PRODUCT RENEWED
as complying with the Florida
Building Code
Acceptance No. 13-0115.06
Expiration Date April 3, 2018
By
Miami Dade Product Control

PRODUCT REVISED
as complying with the Florida
Building Code
Acceptance No. 12-0308.36
Expiration Date 04/03/2013
By
Miami Dade Product Control

MAR 07 2012


AL-FAROOQ CORPORATION
ENGINEERS & PRODUCT DEVELOPMENT
1235 S.W. 87 AVE
MIAMI, FLORIDA 33174
TEL. (305) 264-8100 FAX. (305) 262-6975


STORE\W07-60ES

SERIES 8000 ALUM WINDOW WALL SYSTEM (L.M.I.)

E.S. WINDOWS, LLC
5220 N.W. 72 AVE. BAY #4
MIAMI, FL. 33166
TEL. (305) 624-7775 FAX. (305) 624-7777

revisions:

| no | date | by | description |
|---|---|---|---|
| A | 09.03.08 | | NO CHANGE THIS SHEET |
| B | 03.05.12 | | NO CHANGE THIS SHEET |

date: 08-03-07
scale: –
dr. by: HAMID
chk. by:

drawing no.
W07-60

## MULLION LOAD CAPACITY – PSF
## MULLIONS WITH INTERMEDIATE HORIZONTALS

| NOMINAL DIMS. | | JAMB 'J1' MULL 'M1' | JAMB 'J1' MULL 'M2' | JAMB 'J2' JAMB 'J3' MULL 'M3' | JAMB 'J3' MULL 'M4' | UNANCHORED JAMB OPTIONS MULL OPTIONS |
|---|---|---|---|---|---|---|
| WIDTH (W) | FRAME HEIGHT | EXT. (+) INT. (–) | EXT. (+) INT. (–) | EXT. (+) INT. (–) | EXT. (+) INT. (–) | |
| 30" | 78" | 130.0 | 130.0 | 130.0 | 130.0 | |
| 36" | | 130.0 | 130.0 | 130.0 | 130.0 | |
| 42" | | 130.0 | 130.0 | 130.0 | 130.0 | |
| 48" | | 130.0 | 130.0 | 130.0 | 130.0 | |
| 54" | | 130.0 | 130.0 | 130.0 | 130.0 | |
| 60" | | 130.0 | 130.0 | 130.0 | 130.0 | |
| 30" | 86-1/2" | 130.0 | 130.0 | 130.0 | 130.0 | |
| 36" | | 130.0 | 130.0 | 130.0 | 130.0 | |
| 42" | | 130.0 | 130.0 | 130.0 | 130.0 | |
| 48" | | 130.0 | 130.0 | 130.0 | 130.0 | |
| 54" | | 118.1 | 130.0 | 130.0 | 130.0 | |
| 60" | | 106.3 | 130.0 | 127.2 | 130.0 | |
| 30" | 90" | 130.0 | 130.0 | 130.0 | 130.0 | |
| 36" | | 130.0 | 130.0 | 130.0 | 130.0 | |
| 42" | | 130.0 | 130.0 | 130.0 | 130.0 | |
| 48" | | 118.0 | 130.0 | 130.0 | 130.0 | |
| 54" | | 104.9 | 130.0 | 130.0 | 130.0 | |
| 60" | | 94.4 | 130.0 | 117.5 | 130.0 | |
| 30" | 96" | 130.0 | 130.0 | 130.0 | 130.0 | |
| 36" | | 129.6 | 130.0 | 130.0 | 130.0 | |
| 42" | | 111.1 | 130.0 | 130.0 | 130.0 | |
| 48" | | 97.2 | 130.0 | 129.0 | 130.0 | |
| 54" | | 86.4 | 130.0 | 114.7 | 130.0 | |
| 60" | | 77.8 | 125.1 | 103.2 | 123.4 | |
| 30" | 98-1/2" | 130.0 | 130.0 | 130.0 | 130.0 | |
| 36" | | 120.0 | 130.0 | 130.0 | 130.0 | |
| 42" | | 102.8 | 130.0 | 130.0 | 130.0 | |
| 48" | | 90.0 | 130.0 | 122.6 | 130.0 | |
| 54" | | 80.0 | 128.7 | 109.0 | 130.0 | |
| 58" | | 74.5 | 119.8 | 101.4 | 121.2 | |
| 30" | 102" | 129.7 | 130.0 | 130.0 | 130.0 | |
| 36" | | 108.1 | 130.0 | 130.0 | 130.0 | |
| 42" | | 92.6 | 130.0 | 130.0 | 130.0 | |
| 48" | | 81.0 | 130.0 | 114.3 | 130.0 | |
| 54" | | 72.0 | 115.9 | 101.6 | 121.4 | |
| 56" | | 69.5 | 111.7 | 98.0 | 117.1 | |
| 30" | 108" | 109.2 | 130.0 | 130.0 | 130.0 | |
| 36" | | 91.0 | 130.0 | 130.0 | 130.0 | |
| 42" | | 78.0 | 125.5 | 116.5 | 130.0 | |
| 48" | | 68.3 | 109.8 | 102.0 | 121.9 | |
| 53" | | 61.8 | 99.5 | 92.3 | 110.4 | |
| 30" | 110-1/2" | 102.0 | 130.0 | 130.0 | 130.0 | |
| 36" | | 85.0 | 130.0 | 129.9 | 130.0 | |
| 42" | | 72.8 | 117.2 | 111.3 | 130.0 | |
| 48" | | 63.7 | 102.5 | 97.4 | 116.4 | |
| 52" | | 58.8 | 94.6 | 89.9 | 107.4 | |
| 30" | 114" | 92.9 | 130.0 | 130.0 | 130.0 | |
| 36" | | 77.4 | 124.5 | 122.0 | 130.0 | |
| 42" | | 66.3 | 106.7 | 104.6 | 125.0 | |
| 48" | | 58.0 | 93.4 | 91.5 | 109.4 | |
| 50" | | 55.7 | 89.6 | 87.8 | 105.0 | |
| 30" | 120" | 79.6 | 128.1 | 130.0 | 130.0 | |
| 36" | | 66.4 | 106.7 | 110.1 | 130.0 | |
| 42" | | 56.9 | 91.5 | 94.4 | 112.8 | |
| 48" | | 49.8 | 80.1 | 82.6 | 98.7 | |

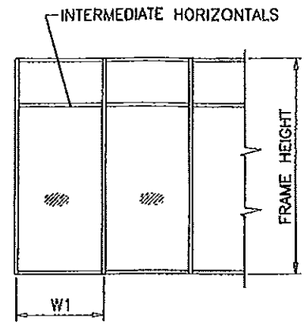


WIDTH (W) = W1
AT FRAME JAMB

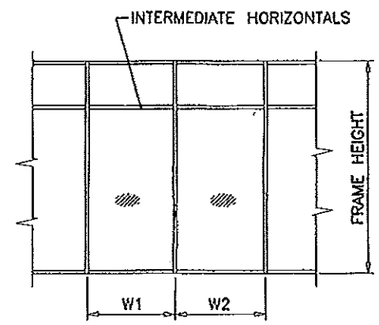


WIDTH (W) = $\frac{W1 + W2}{2}$
AT FRAME MULLION

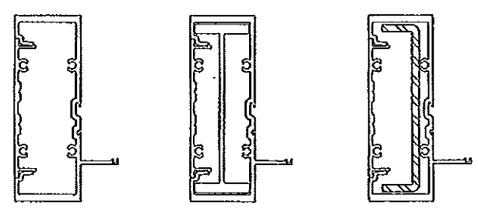

JAMB 'J1' JAMB 'J2' JAMB 'J3'

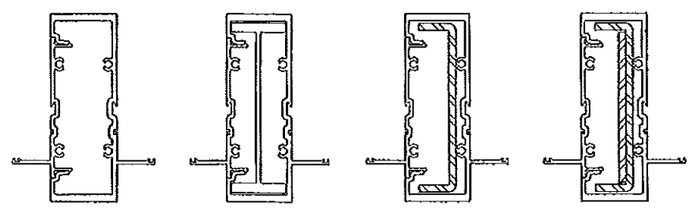

MULLION 'M1' MULLION 'M2' MULLION 'M3' MULLION 'M4'

NOTE:
INTERPOLATION BETWEEN WIDTHS ALLOWED.

MULLIONS

Engr: JAVAD AHMAD
CIVIL
FLA. PE # 70592
C.A.N. 3538

PRODUCT RENEWED
as complying with the Florida
Building Code
Acceptance No 13-0115.06
Expiration Date April 3, 2018
By
Miami Dade Product Control

PRODUCT REVISED
as complying with the Florida
Building Code
Acceptance No 12-0308.36
Expiration Date 04/03/2013
By
Miami Dade Product Control

MAR 07 2012


AL-FAROOQ CORPORATION
ENGINEERS & PRODUCT DEVELOPMENT
1235 S.W. 87 AVE
MIAMI, FLORIDA 33174
TEL (305) 264-8100 FAX. (305) 262-6978


STORE\W07-60ES

SERIES 8000 ALUM WINDOW WALL SYSTEM (L.M.I.)

E.S. WINDOWS, LLC
5220 N.W. 72 AVE. BAY #4
MIAMI, FL. 33166
TEL. (305) 624-7775 FAX. (305) 624-7777

revisions:

| no | date | by | description |
|---|---|---|---|
| A | 08.03.08 | | NO CHANGE THIS SHEET |
| B | 03.05.12 | | NO CHANGE THIS SHEET |

date: 08-03-07
scale: –
dr. by: HAMID
chk. by:

drawing no.
W07-60

sheet 4 of 12

| DOOR MULLION LOAD CAPACITY-PSF | | | | | |
|---|---|---|---|---|---|
| SIDELITE WIDTH INCHES | FRAME HEIGHT INCHES | JAMB 'JD1' MULL 'MD1' | JAMB 'JD1' MULL 'MD2' | JAMB 'JD2' JAMB 'JD3' MULL 'MD3' | JAMB 'JD3' MULL 'MD4' |
| | | EXT. (+) INT. (-) | EXT. (+) INT. (-) | EXT. (+) INT. (-) | EXT. (+) INT. (-) |
| 32 | 86-1/2 | 120.0 | 120.0 | 120.0 | 120.0 |
| 36 | | 120.0 | 120.0 | 120.0 | 120.0 |
| 42 | | 120.0 | 120.0 | 120.0 | 120.0 |
| 48 | | 120.0 | 120.0 | 120.0 | 120.0 |
| 54 | | 120.0 | 120.0 | 120.0 | 120.0 |
| 60 | | 119.4 | 120.0 | 120.0 | 120.0 |
| 32 | 98-1/2 | 109.5 | 120.0 | 120.0 | 120.0 |
| 36 | | 104.2 | 120.0 | 120.0 | 120.0 |
| 42 | | 97.2 | 120.0 | 120.0 | 120.0 |
| 48 | | 91.1 | 120.0 | 120.0 | 120.0 |
| 54 | | 85.7 | 120.0 | 116.6 | 120.0 |
| 32 | 110-1/2 | 77.6 | 120.0 | 118.4 | 120.0 |
| 36 | | 73.8 | 114.4 | 112.7 | 120.0 |
| 42 | | 68.8 | 106.7 | 105.1 | 120.0 |
| 48 | | 64.5 | 100.0 | 98.5 | 117.7 |

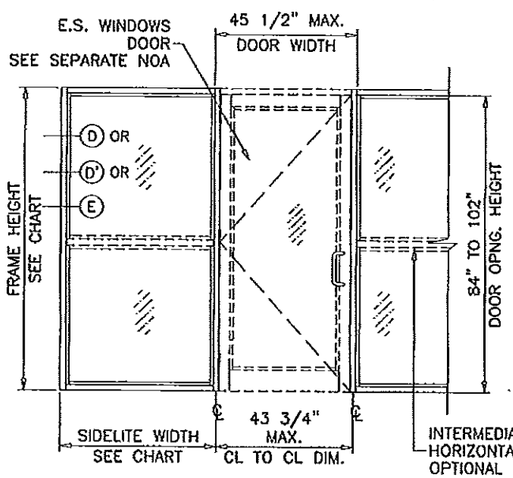


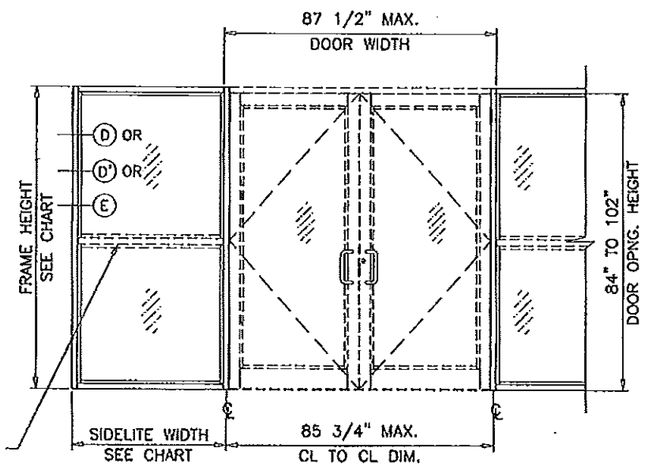


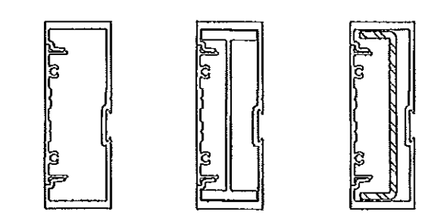

JAMB 'JD1' JAMB 'JD2' JAMB 'JD3'

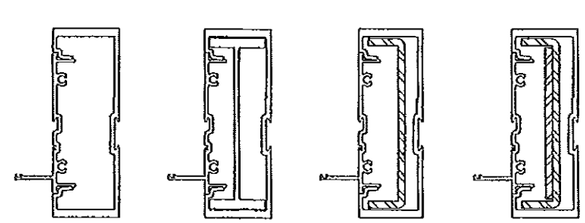

MULLION 'MD1' MULLION 'MD2' MULLION 'MD3' MULLION 'MD4'

| DOOR MULLION LOAD CAPACITY-PSF | | | | | |
|---|---|---|---|---|---|
| SIDELITE WIDTH INCHES | FRAME HEIGHT INCHES | JAMB 'JD1' MULL 'MD1' | JAMB 'JD1' MULL 'MD2' | JAMB 'JD2' JAMB 'JD3' MULL 'MD3' | JAMB 'JD3' MULL 'MD4' |
| | | EXT. (+) INT. (-) | EXT. (+) INT. (-) | EXT. (+) INT. (-) | EXT. (+) INT. (-) |
| 32 | 98-1/2 | 90.0 | 90.0 | 90.0 | 90.0 |
| 36 | | 90.0 | 90.0 | 90.0 | 90.0 |
| 42 | | 90.0 | 90.0 | 90.0 | 90.0 |
| 48 | | 90.0 | 90.0 | 90.0 | 90.0 |
| 54 | | 85.7 | 90.0 | 90.0 | 90.0 |
| 32 | 110-1/2 | 77.6 | 90.0 | 90.0 | 90.0 |
| 36 | | 73.8 | 90.0 | 90.0 | 90.0 |
| 42 | | 68.8 | 90.0 | 90.0 | 90.0 |
| 48 | | 64.5 | 90.0 | 90.0 | 90.0 |
| 32 | 114 | 70.6 | 90.0 | 90.0 | 90.0 |
| 36 | | 67.2 | 90.0 | 90.0 | 90.0 |
| 42 | | 62.7 | 90.0 | 90.0 | 90.0 |
| 48 | | 58.7 | 90.0 | 90.0 | 90.0 |
| 32 | 120 | 60.6 | 90.0 | 90.0 | 90.0 |
| 36 | | 57.6 | 89.4 | 90.0 | 90.0 |
| 42 | | 53.8 | 83.3 | 89.1 | 90.0 |
| 48 | | 50.4 | 78.1 | 83.5 | 90.0 |

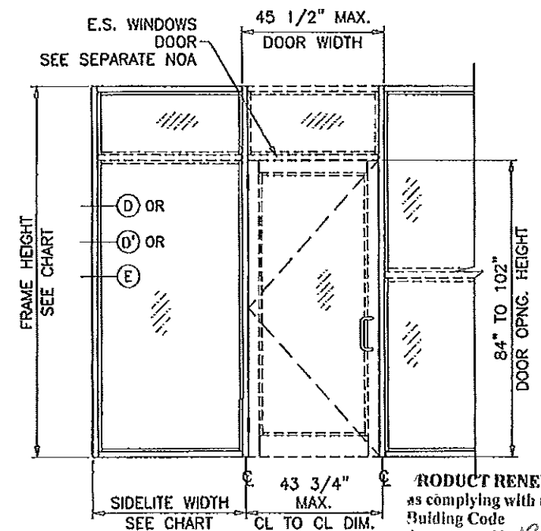


PRODUCT RENEWED
as complying with the Florida
Building Code
Acceptance No. 13-0115.06
Expiration Date April 3, 2018
By Manuel Perez
Miami-Dade Product Control

DOOR-WINDOWALL
TRANSITION MULLION

Engr: JAVAD AHMAD
CIVIL
FLA. PE # 70592
C.A.N. 3538

PRODUCT REVISED
is complying with the Florida
Building Code 12-0308.36
Acceptance No
Expiration Date 03/03/2012
By
Miami-Dade Product Control

MAR 07 2012


AL-FAROOQ CORPORATION
ENGINEERS & PRODUCT DEVELOPMENT
1235 S.W. 87 AVE
MIAMI, FLORIDA 33174
TEL (305) 264-8100 FAX (305) 262-6973
STORE\W07-60ES


SERIES 8000 ALUM WINDOW WALL SYSTEM (L.M.L.)

E.S. WINDOWS, LLC
5220 N.W. 72 AVE. BAY #4
MIAMI, FL. 33166
TEL (305) 624-7775 FAX. (305) 624-7777

revisions:

| no | date | by | description |
|---|---|---|---|
| A | 09.03.08 | | DOOR MULLION ADDED |
| B | 03.05.12 | | NO CHANGE THIS SHEET |

date: 08-03-07
scale: -
dr. by: HAMID
chk. by:

drawing no.
W07-60

## ANCHOR LOAD CAPACITY ~ PSF
EXT.(+) & INT.(−)

| NOMINAL DIMS. | | ANCHORS TYPE 'A' | | | ANCHORS TYPE 'B' & 'D' | | | ANCHORS TYPE 'C' | | |
|---|---|---|---|---|---|---|---|---|---|---|
| WIDTH (W) | FRAME HEIGHT | A2 | A3 | A4 | B2/D2 | B3/D3 | B4/D4 | C2 | C3 | C4 |
| 30" | 72" | 130.0 | 130.0 | 130.0 | 130.0 | 130.0 | 130.0 | 130.0 | 130.0 | 130.0 |
| 36" | | 108.4 | 130.0 | 130.0 | 130.0 | 130.0 | 130.0 | 130.0 | 130.0 | 130.0 |
| 42" | | 93.0 | 130.0 | 130.0 | 122.3 | 130.0 | 130.0 | 130.0 | 130.0 | 130.0 |
| 48" | | 81.3 | 122.0 | 130.0 | 107.0 | 130.0 | 130.0 | 123.3 | 130.0 | 130.0 |
| 54" | | 72.3 | 108.4 | 130.0 | 95.1 | 130.0 | 130.0 | 109.6 | 130.0 | 130.0 |
| 60" | | 65.1 | 97.6 | 130.0 | 85.6 | 128.4 | 130.0 | 98.7 | 130.0 | 130.0 |
| 30" | 78" | 120.1 | 130.0 | 130.0 | 130.0 | 130.0 | 130.0 | 130.0 | 130.0 | 130.0 |
| 36" | | 100.1 | 130.0 | 130.0 | 130.0 | 130.0 | 130.0 | 130.0 | 130.0 | 130.0 |
| 42" | | 85.8 | 128.7 | 130.0 | 112.9 | 130.0 | 130.0 | 130.0 | 130.0 | 130.0 |
| 48" | | 75.1 | 112.6 | 130.0 | 98.8 | 130.0 | 130.0 | 113.8 | 130.0 | 130.0 |
| 54" | | 66.7 | 100.1 | 130.0 | 87.8 | 130.0 | 130.0 | 101.2 | 130.0 | 130.0 |
| 60" | | 60.1 | 90.1 | 120.1 | 79.0 | 118.5 | 130.0 | 91.1 | 130.0 | 130.0 |
| 30" | 86-1/2" | 108.3 | 130.0 | 130.0 | 130.0 | 130.0 | 130.0 | 130.0 | 130.0 | 130.0 |
| 36" | | 90.3 | 130.0 | 130.0 | 118.8 | 130.0 | 130.0 | 130.0 | 130.0 | 130.0 |
| 42" | | 77.4 | 116.1 | 130.0 | 101.8 | 130.0 | 130.0 | 117.3 | 130.0 | 130.0 |
| 48" | | 67.7 | 101.5 | 130.0 | 89.1 | 130.0 | 130.0 | 102.7 | 130.0 | 130.0 |
| 54" | | 60.2 | 90.3 | 120.4 | 79.2 | 118.8 | 130.0 | 91.3 | 130.0 | 130.0 |
| 60" | | 54.2 | 81.2 | 108.3 | 71.3 | 106.9 | 130.0 | 82.1 | 123.2 | 130.0 |
| 30" | 90" | 104.1 | 130.0 | 130.0 | 130.0 | 130.0 | 130.0 | 130.0 | 130.0 | 130.0 |
| 36" | | 86.8 | 130.0 | 130.0 | 114.1 | 130.0 | 130.0 | 130.0 | 130.0 | 130.0 |
| 42" | | 74.4 | 111.5 | 130.0 | 97.8 | 130.0 | 130.0 | 112.8 | 130.0 | 130.0 |
| 48" | | 65.1 | 97.6 | 130.0 | 85.6 | 128.4 | 130.0 | 98.7 | 130.0 | 130.0 |
| 54" | | 57.8 | 86.8 | 115.7 | 76.1 | 114.1 | 130.0 | 87.7 | 130.0 | 130.0 |
| 60" | | 52.1 | 78.1 | 104.1 | 68.5 | 102.7 | 130.0 | 78.9 | 118.4 | 130.0 |
| 30" | 96" | 97.6 | 130.0 | 130.0 | 128.4 | 130.0 | 130.0 | 130.0 | 130.0 | 130.0 |
| 36" | | 81.3 | 122.0 | 130.0 | 107.0 | 130.0 | 130.0 | 123.3 | 130.0 | 130.0 |
| 42" | | 69.7 | 104.6 | 130.0 | 91.7 | 130.0 | 130.0 | 105.7 | 130.0 | 130.0 |
| 48" | | 61.0 | 91.5 | 122.0 | 80.3 | 120.4 | 130.0 | 92.5 | 130.0 | 130.0 |
| 54" | | 54.2 | 81.3 | 108.4 | 71.3 | 107.0 | 130.0 | 82.2 | 123.3 | 130.0 |
| 60" | | 48.8 | 73.2 | 97.6 | 64.2 | 96.3 | 128.4 | 74.0 | 111.0 | 130.0 |
| 30" | 98-1/2" | 95.1 | 130.0 | 130.0 | 125.1 | 130.0 | 130.0 | 130.0 | 130.0 | 130.0 |
| 36" | | 79.3 | 118.9 | 130.0 | 104.3 | 130.0 | 130.0 | 120.2 | 130.0 | 130.0 |
| 42" | | 67.9 | 101.9 | 130.0 | 89.4 | 130.0 | 130.0 | 103.0 | 130.0 | 130.0 |
| 48" | | 59.5 | 89.2 | 118.9 | 78.2 | 117.3 | 130.0 | 90.2 | 130.0 | 130.0 |
| 54" | | 52.8 | 79.3 | 105.7 | 69.5 | 104.3 | 130.0 | 80.1 | 120.2 | 130.0 |
| 30" | 102" | 91.9 | 130.0 | 130.0 | 120.8 | 130.0 | 130.0 | 130.0 | 130.0 | 130.0 |
| 36" | | 76.5 | 114.8 | 130.0 | 100.7 | 130.0 | 130.0 | 116.1 | 130.0 | 130.0 |
| 42" | | 65.6 | 98.4 | 130.0 | 86.3 | 129.5 | 130.0 | 99.5 | 130.0 | 130.0 |
| 48" | | 57.4 | 86.1 | 114.8 | 75.5 | 113.3 | 130.0 | 87.1 | 130.0 | 130.0 |
| 54" | | 51.0 | 76.5 | 102.1 | 67.1 | 100.7 | 130.0 | 77.4 | 116.1 | 130.0 |
| 30" | 108" | 86.8 | 130.0 | 130.0 | 114.1 | 130.0 | 130.0 | 130.0 | 130.0 | 130.0 |
| 36" | | 72.3 | 108.4 | 130.0 | 95.1 | 130.0 | 130.0 | 109.6 | 130.0 | 130.0 |
| 42" | | 62.0 | 93.0 | 123.9 | 81.5 | 122.3 | 130.0 | 94.0 | 130.0 | 130.0 |
| 48" | | 54.2 | 81.3 | 108.4 | 71.3 | 107.0 | 130.0 | 82.2 | 123.3 | 130.0 |
| 30" | 110-1/2" | 84.8 | 127.2 | 130.0 | 111.6 | 130.0 | 130.0 | 128.6 | 130.0 | 130.0 |
| 36" | | 70.7 | 106.0 | 130.0 | 93.0 | 130.0 | 130.0 | 107.1 | 130.0 | 130.0 |
| 42" | | 60.6 | 90.8 | 121.1 | 79.7 | 119.5 | 130.0 | 91.8 | 130.0 | 130.0 |
| 48" | | 53.0 | 79.5 | 106.0 | 69.7 | 104.6 | 130.0 | 80.4 | 120.5 | 130.0 |
| 30" | 114" | 82.2 | 123.3 | 130.0 | 108.1 | 130.0 | 130.0 | 124.6 | 130.0 | 130.0 |
| 36" | | 68.5 | 102.7 | 130.0 | 90.1 | 130.0 | 130.0 | 103.9 | 130.0 | 130.0 |
| 42" | | 58.7 | 88.1 | 117.4 | 77.2 | 115.8 | 130.0 | 89.0 | 130.0 | 130.0 |
| 48" | | 51.4 | 77.1 | 102.7 | 67.6 | 101.4 | 130.0 | 77.9 | 116.8 | 130.0 |
| 30" | 120" | 78.1 | 117.1 | 130.0 | 102.7 | 130.0 | 130.0 | 118.4 | 130.0 | 130.0 |
| 36" | | 65.1 | 97.6 | 130.0 | 85.6 | 128.4 | 130.0 | 98.7 | 130.0 | 130.0 |
| 42" | | 55.8 | 83.7 | 111.5 | 73.4 | 110.1 | 130.0 | 84.6 | 126.9 | 130.0 |
| 48" | | 48.8 | 73.2 | 97.6 | 64.2 | 96.3 | 128.4 | 74.0 | 111.0 | 130.0 |

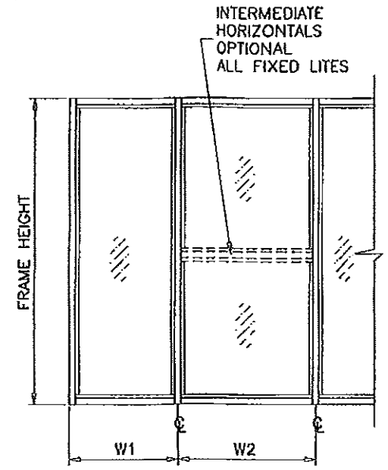


WIDTH (W) = $\frac{W1 + W2}{2}$

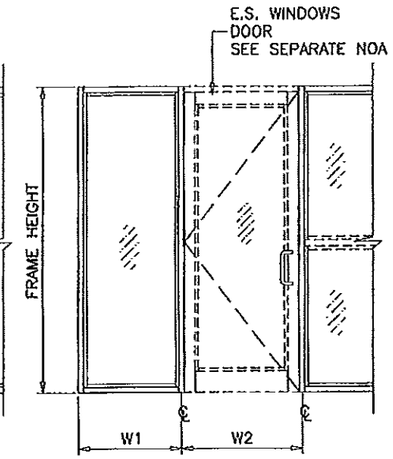


WIDTH (W) = $\frac{W1 + W2}{2}$

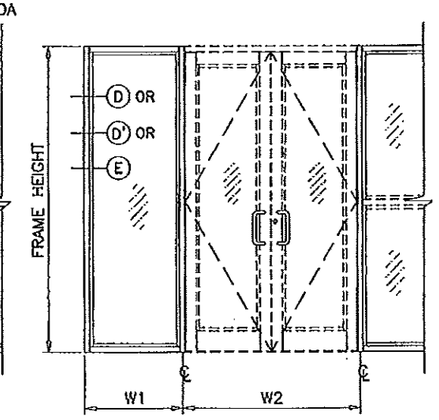


WIDTH (W) = $\frac{W1}{2} + \frac{W2}{4}$

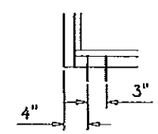


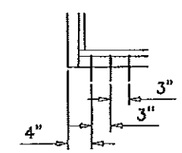


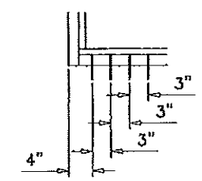


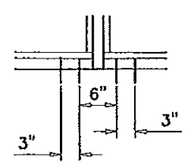


A2, B2, C2

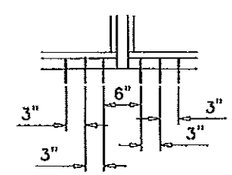


A3, B3, C3

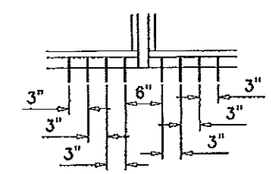


A4, B4, C4

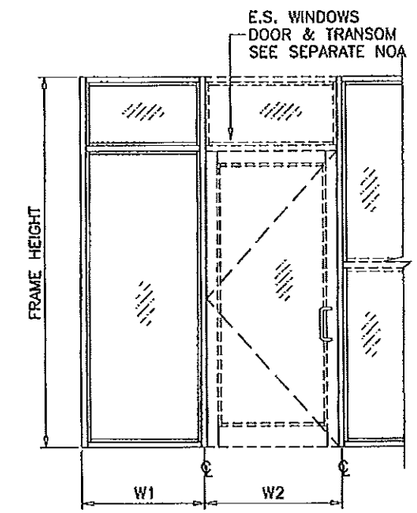


WIDTH (W) = $\frac{W1 + W2}{2}$

ANCHORS TYPES: SEE SHEET 8 FOR DESCRIPTION

A2 = (2) ANCHORS TYPE 'A' AT EACH SIDE OF JAMB AND MULLION
B2 = (2) ANCHORS TYPE 'B' AT EACH SIDE OF JAMB AND MULLION
C2 = (2) ANCHORS TYPE 'C' AT EACH SIDE OF JAMB AND MULLION
D2 = (2) ANCHORS TYPE 'D' AT EACH SIDE OF JAMB AND MULLION

A3 = (3) ANCHORS TYPE 'A' AT EACH SIDE OF JAMB AND MULLION
B3 = (3) ANCHORS TYPE 'B' AT EACH SIDE OF JAMB AND MULLION
C3 = (3) ANCHORS TYPE 'C' AT EACH SIDE OF JAMB AND MULLION
D3 = (3) ANCHORS TYPE 'D' AT EACH SIDE OF JAMB AND MULLION

A4 = (4) ANCHORS TYPE 'A' AT EACH SIDE OF JAMB AND MULLION
B4 = (4) ANCHORS TYPE 'B' AT EACH SIDE OF JAMB AND MULLION
C4 = (4) ANCHORS TYPE 'C' AT EACH SIDE OF JAMB AND MULLION
D4 = (4) ANCHORS TYPE 'D' AT EACH SIDE OF JAMB AND MULLION

ALL OTHER ANCHORS TO BE SPACED AS PER ELEVATION.

NOTE:
INTERPOLATION BETWEEN WIDTHS OR HEIGHTS ALLOWED.

ANCHORS

Engr: JAVAD AHMAD
CIVIL
FLA. PE # 70592
C.A.N: 3938

PRODUCT RENEWED
as complying with the Florida
Building Code
Acceptance No. 13-0115.06
Expiration Date April 3, 2018
By Manuel Perez
Miami Dade Product Control

PRODUCT REVISED
as complying with the Florida
Building Code 12-0308.36
Acceptance No
Expiration Date 04/03/2013
By
Miami Dade Product Control

MAR 07 2012


AL-FAROOQ CORPORATION
ENGINEERS & PRODUCT DEVELOPMENT
1235 S.W. 87 AVE
MIAMI, FLORIDA 33174
TEL. (305) 264-8100 FAX. (305) 262-6978
STORE\W07-60ES


SERIES 8000 ALUM WINDOW WALL SYSTEM (L.M.I.)

E.S. WINDOWS, LLC
5220 N.W. 72 AVE. BAY #4
MIAMI, FL. 33166
TEL. (305) 624-7775 FAX. (305) 624-7777

| revisions: | | | |
|---|---|---|---|
| no. | date | by | description |
| A | 09.03.08 | | NO CHANGE THIS SHEET |
| B | 03.05.12 | | NO CHANGE THIS SHEET |

date: 08-03-07
scale: -
dr. by: HAMID
chk. by:

drawing no.
W07-60

sheet 6 of 12

| DOOR MULLION LOAD CAPACITY-PSF | | | | | |
|---|---|---|---|---|---|
| SIDELITE WIDTH INCHES | FRAME HEIGHT INCHES | JAMB 'JD1' MULL 'MD1' | JAMB 'JD1' MULL 'MD2' | JAMB 'JD2' JAMB 'JD3' MULL 'MD3' | JAMB 'JD3' MULL 'MD4' |
| | | EXT. (+) INT. (-) | EXT. (+) INT. (-) | EXT. (+) INT. (-) | EXT. (+) INT. (-) |
| 30 | 96 | 90.0 | 90.0 | 90.0 | 90.0 |
| 36 | | 90.0 | 90.0 | 90.0 | 90.0 |
| 42 | | 90.0 | 90.0 | 90.0 | 90.0 |
| 48 | | 90.0 | 90.0 | 90.0 | 90.0 |
| 54 | | 85.4 | 90.0 | 90.0 | 90.0 |
| 60 | | 81.0 | 90.0 | 90.0 | 90.0 |
| 30 | 102 | 86.3 | 90.0 | 90.0 | 90.0 |
| 36 | | 80.9 | 90.0 | 90.0 | 90.0 |
| 42 | | 76.2 | 90.0 | 90.0 | 90.0 |
| 48 | | 71.9 | 90.0 | 90.0 | 90.0 |
| 54 | | 68.2 | 90.0 | 90.0 | 90.0 |
| 30 | 108 | 69.6 | 90.0 | 90.0 | 90.0 |
| 36 | | 65.4 | 90.0 | 90.0 | 90.0 |
| 42 | | 61.7 | 90.0 | 90.0 | 90.0 |
| 48 | | 58.5 | 90.0 | 88.3 | 90.0 |
| 30 | 114 | 57.2 | 88.7 | 90.0 | 90.0 |
| 36 | | 53.9 | 83.6 | 85.3 | 90.0 |
| 42 | | 51.0 | 79.0 | 80.7 | 90.0 |
| 48 | | 48.3 | 74.9 | 76.6 | 90.0 |
| 30 | 120 | 47.8 | 74.1 | 78.7 | 90.0 |
| 36 | | 45.1 | 69.9 | 74.4 | 88.9 |
| 42 | | 42.7 | 66.2 | 70.5 | 84.2 |
| 48 | | 40.5 | 62.8 | 67.0 | 80.1 |

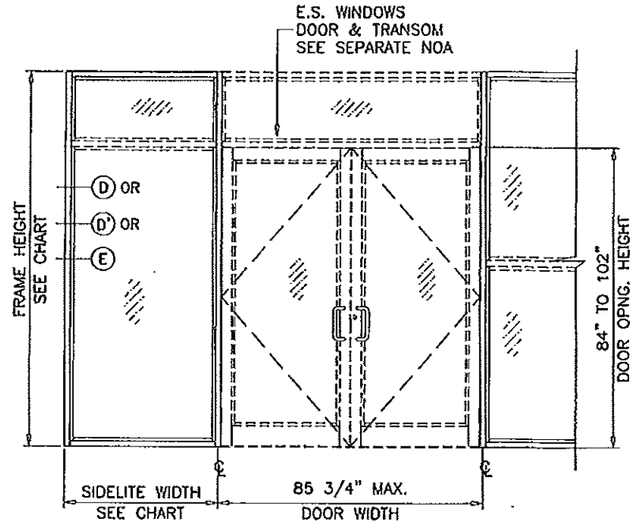


| ANCHOR LOAD CAPACITY - PSF EXT.(+) & INT.(-) | | | | | |
|---|---|---|---|---|---|
| NOMINAL DIMS. | | ANCHORS TYPE 'A' | | ANCHORS TYPE 'B' & 'D' | ANCHORS TYPE 'C' |
| WIDTH (W) | FRAME HEIGHT | A3 | A4 | B3/D3 | C3 |
| 30 | 96 | 79.6 | 90.0 | 90.0 | 90.0 |
| 36 | | 75.5 | 90.0 | 90.0 | 90.0 |
| 42 | | 71.8 | 90.0 | 90.0 | 90.0 |
| 48 | | 68.4 | 90.0 | 90.0 | 90.0 |
| 54 | | 65.4 | 86.0 | 86.0 | 90.0 |
| 60 | | 62.6 | 82.3 | 82.3 | 90.0 |
| 30 | 102 | 76.4 | 90.0 | 90.0 | 90.0 |
| 36 | | 72.4 | 90.0 | 90.0 | 90.0 |
| 42 | | 68.8 | 90.0 | 90.0 | 90.0 |
| 48 | | 65.5 | 86.2 | 86.2 | 90.0 |
| 54 | | 62.5 | 82.3 | 82.3 | 90.0 |
| 30 | 108 | 73.5 | 90.0 | 90.0 | 90.0 |
| 36 | | 69.6 | 90.0 | 90.0 | 90.0 |
| 42 | | 66.0 | 86.9 | 86.9 | 90.0 |
| 48 | | 62.9 | 82.7 | 82.7 | 90.0 |
| 30 | 114 | 70.8 | 90.0 | 90.0 | 90.0 |
| 36 | | 67.0 | 88.1 | 88.1 | 90.0 |
| 42 | | 63.5 | 83.6 | 83.6 | 90.0 |
| 48 | | 60.4 | 79.5 | 79.5 | 90.0 |
| 30 | 120 | 68.3 | 89.9 | 89.9 | 90.0 |
| 36 | | 64.5 | 84.9 | 84.9 | 90.0 |
| 42 | | 61.2 | 80.5 | 80.5 | 90.0 |
| 48 | | 58.1 | 76.5 | 76.5 | 88.1 |

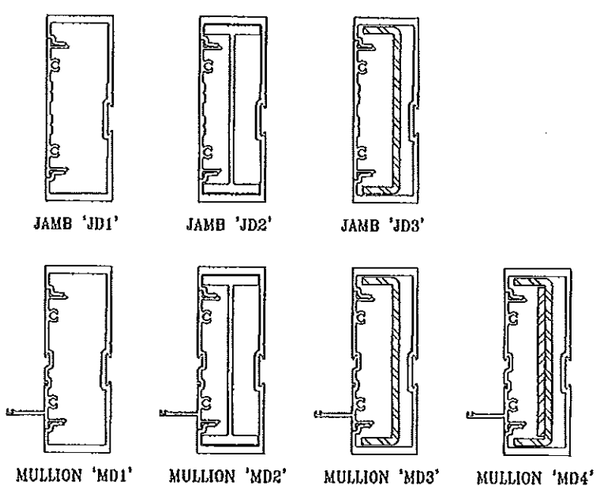


DOOR-WINDOWALL
TRANSITION MULLION

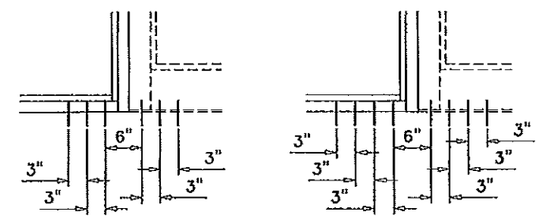


A3, B3, C3 A4

ANCHORS TYPES: SEE SHEET 8 FOR DESCRIPTION

A3 = (3) ANCHORS TYPE 'A' AT EACH SIDE OF DOOR MULLION
B3 = (3) ANCHORS TYPE 'B' AT EACH SIDE OF DOOR MULLION
C3 = (3) ANCHORS TYPE 'C' AT EACH SIDE OF DOOR MULLION
D3 = (3) ANCHORS TYPE 'D' AT EACH SIDE OF DOOR MULLION

A4 = (4) ANCHORS TYPE 'A' AT EACH SIDE OF DOOR MULLION

ALL OTHER ANCHORS TO BE SPACED AS PER ELEVATION.

TRANSITION MULLION ANCHORS

PRODUCT RENEWED
as complying with the Florida
Building Code
Acceptance No. 13-0115.06
Expiration Date April 3, 2018
By Manuel Perez
Miami Dade Product Control

Engr: JAVAD AHMAD
CIVIL
FLA. PE # 70592
C.A.N. 3538

PRODUCT REVISED
as complying with the Florida
Building Code
Acceptance No 12-0308.36
Expiration Date 04/03/2013
By
Miami Dade Product Control

MAR 07 2012


AL-FAROOQ CORPORATION
ENGINEERS & PRODUCT DEVELOPMENT
1235 S.W. 87 AVE
MIAMI, FLORIDA 33174
TEL. (305) 264-8100 FAX. (305) 262-6978


STORE \W07-60ES

SERIES 8000 ALUM WINDOW WALL SYSTEM (L.M.I.)

E.S. WINDOWS, LLC
5220 N.W. 72 AVE. BAY #4
MIAMI, FL. 33166
TEL. (305) 624-7777 FAX. (305) 624-7775

revisions:

| no | date | by | description |
|---|---|---|---|
| A | 09.03.08 | | DOOR MULLION ADDED |
| B | 03.05.12 | | NO CHANGE THIS SHEET |

date: 08-03-07
scale: -
dr. by: HAMID
chk. by:

drawing no.
W07-60

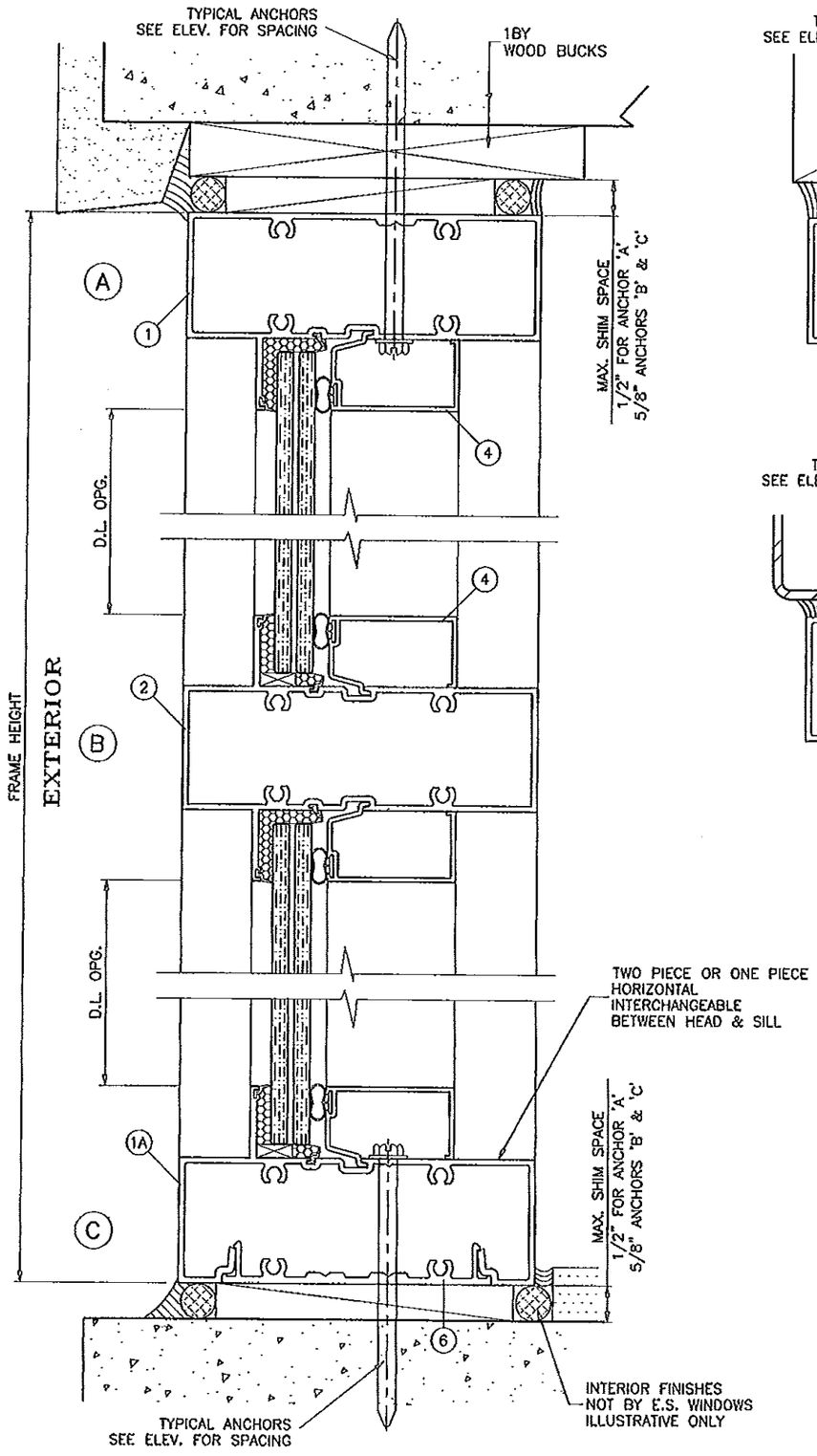


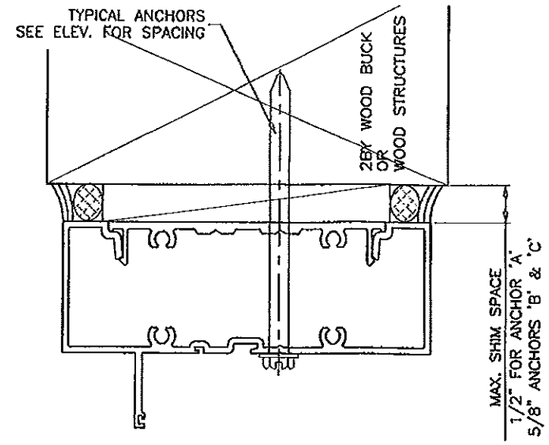


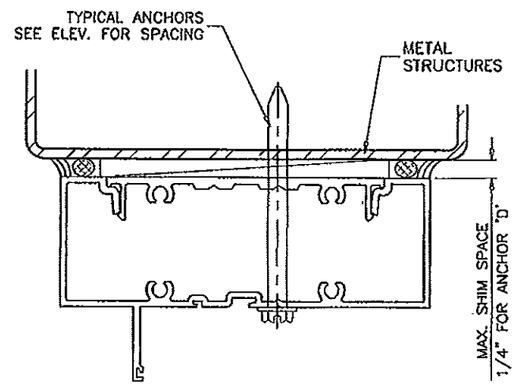


## TYPICAL ANCHORS: SEE ELEV. FOR SPACING

**TYPE 'A'**

1/4" DIA ULTRACON BY 'ELCO'

INTO 2BY WOOD BUCKS OR WOOD STRUCTURES
WITH 1-3/8" MIN. PENETRATION INTO WOOD

THRU 1BY WOOD BUCKS INTO CONCRETE
WITH 1-1/4" MIN. EMBED INTO CONCRETE

DIRECTLY INTO CONCRETE
WITH 1-1/4" MIN. EMBED INTO CONC.

ANCHOR EDGE DISTANCES

INTO CONCRETE AND MASONRY = 2-1/2" MIN.
INTO WOOD STRUCTURE = 1" MIN.

**TYPE 'B'**

1/4" DIA HILTI KWIK CON II BY 'HILTI'

INTO 2BY WOOD BUCKS OR WOOD STRUCTURES
WITH 1-1/2" MIN. PENETRATION INTO WOOD

THRU 1BY WOOD BUCKS INTO CONCRETE
WITH 1-1/4" MIN. EMBED INTO CONCRETE

DIRECTLY INTO CONCRETE
WITH 1-1/4" MIN. EMBED INTO CONC.

ANCHOR EDGE DISTANCES

INTO CONCRETE AND MASONRY = 3" MIN.
INTO WOOD STRUCTURE = 1" MIN.

**TYPE 'C'**

5/16" DIA ULTRACON BY 'ELCO'

INTO 2BY WOOD BUCKS OR WOOD STRUCTURES
WITH 1-1/2" MIN. PENETRATION INTO WOOD

THRU 1BY WOOD BUCKS INTO CONCRETE
WITH 1-1/4" MIN. EMBED INTO CONCRETE

DIRECTLY INTO CONCRETE
WITH 1-1/4" MIN. EMBED INTO CONC.

ANCHOR EDGE DISTANCES

INTO CONCRETE AND MASONRY = 3" MIN.
INTO WOOD STRUCTURE = 1" MIN.

**TYPE 'D'**

#14 SMS OR SELF DRILLING SCREWS ST/ST

INTO METAL STRUCTURES

STEEL : 12 GA. MIN. (Fy = 36 KSI MIN.)
ALUMINUM : 1/8" THK. MIN. (6063-T5 MIN.)
(STEEL IN CONTACT WITH ALUMINUM TO BE PLATED OR PAINTED)

ANCHOR EDGE DISTANCES

INTO METAL STRUCTURE = 1/2" MIN.

PRODUCT RENEWED
as complying with the Florida
Building Code
Acceptance No. 13-0115.06
Expiration Date April 3, 2018
By Manuel Gore
Miami Dade Product Control

## SEALANTS:

ALL FRAME CORNERS, JOINTS, MULLION SEAMS AND PERIMETER OF GLAZING BEAD TO FRAME SEALED WITH SILICONE SEALANT.

WOOD BUCKS AND METAL STRUCTURES NOT BY E.S. WDW. MUST SUPPORT LOADS IMPOSED BY GLAZING SYSTEM AND TRANSFER THEM TO THE BUILDING STRUCTURE.

Engr: JAVAD AHMAD
CIVIL
FLA. PE # 70592
C.A.N. 3538

PRODUCT REVISED
as complying with the Florida
Building Code
Acceptance No 12-0308.36
Expiration Date 04/03/2013
By
Miami Dade Product Control

MAR 07 2012


AL-FAROOQ CORPORATION
ENGINEERS & PRODUCT DEVELOPMENT
1235 S.W. 87 AVE
MIAMI, FLORIDA 33174
TEL (305) 264-8100 FAX. (305) 262-6978
STORE\W07-60ES


SERIES 8000 ALUM WINDOW WALL SYSTEM (L.M.I.)


E.S. WINDOWS, LLC
5220 N.W. 72 AVE. BAY #4
MIAMI, FL. 33166
TEL. (305) 624-7775 FAX. (305) 624-7777


revisions:

| no | date | by | description |
|---|---|---|---|
| A | 09.03.08 | | NO CHANGE THIS SHEET |
| B | 03.05.12 | | NO CHANGE THIS SHEET |

date: 08-03-07
scale: 1/2" = 1"
dr. by: HAMID
chk. by:

drawing no.
W07-60

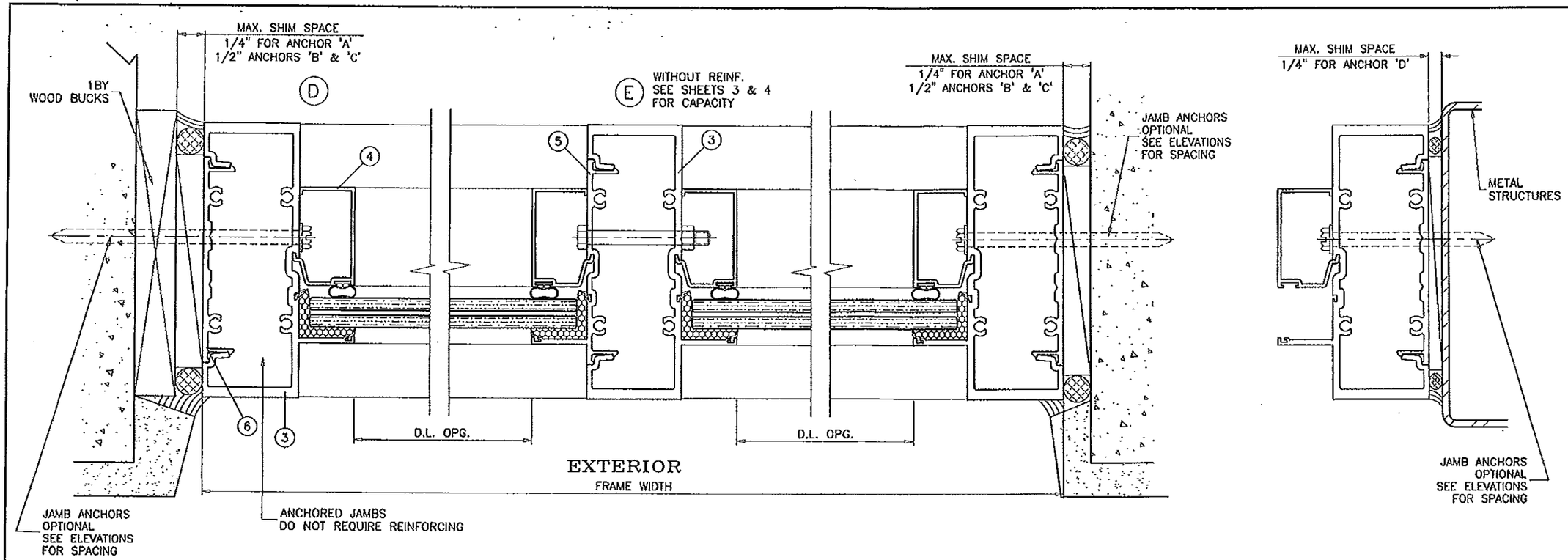


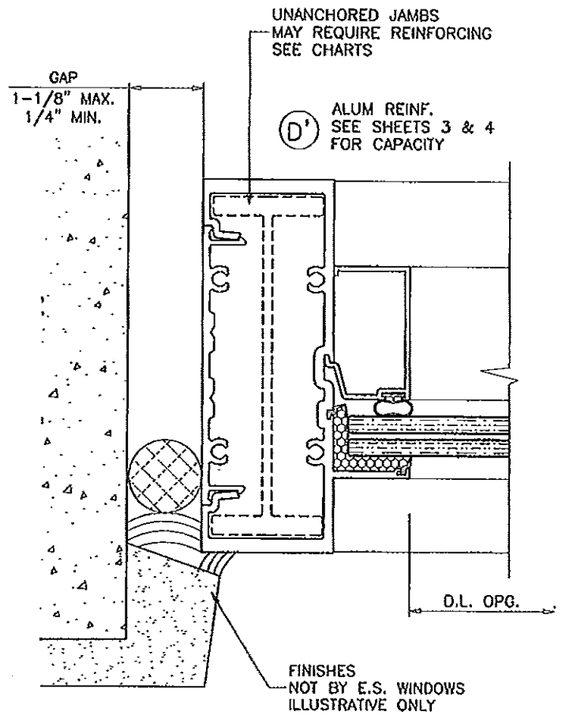


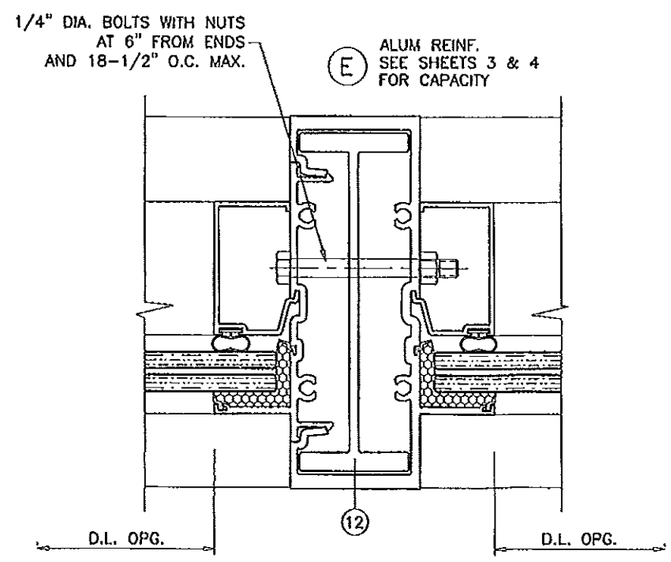


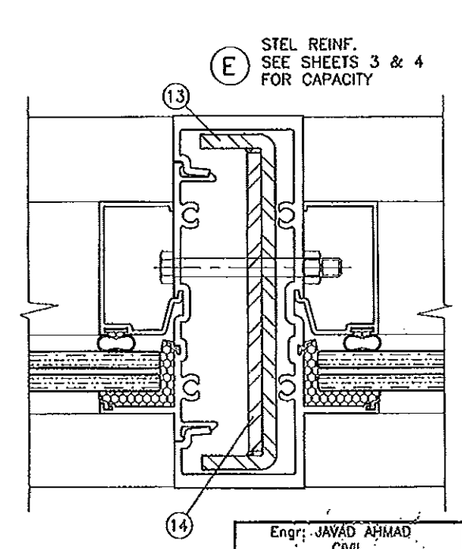


PRODUCT RENEWED
as complying with the Florida
Building Code
Acceptance No 13-0115.06
Expiration Date April 2, 2018
By
Miami Dade Product Control

Engr: JAVAD AHMAD
CIVIL
FLA. PE # 70592
C.A.N. 3538

PRODUCT REVISED
as complying with the Florida
Building Code
Acceptance No 12-0308.36
Expiration Date 04/03/2013
By
Miami Dade Product Control

MAR 07 2012


AL-FAROOQ CORPORATION
ENGINEERS & PRODUCT DEVELOPMENT
1235 S.W. 87 AVE
MIAMI, FLORIDA 33174
TEL. (305) 264-8100 FAX. (305) 262-6978
STORE\W07-60ES


SERIES 8000 ALUM WINDOW WALL SYSTEM (L.M.I.)

E.S. WINDOWS, LLC
5220 N.W. 72 AVE. BAY #4
MIAMI, FL. 33166
TEL. (305) 624-7775 FAX. (305) 624-7777

revisions:

| no | date | by | description |
|---|---|---|---|
| A | 09.03.08 | | NO CHANGE THIS SHEET |
| B | 03.05.12 | | UPDATED TO 2010 FBC |

date: 08-03-07
scale: 1/2" = 1"
dr. by: HAMID
chk. by:

drawing no.
W07-60

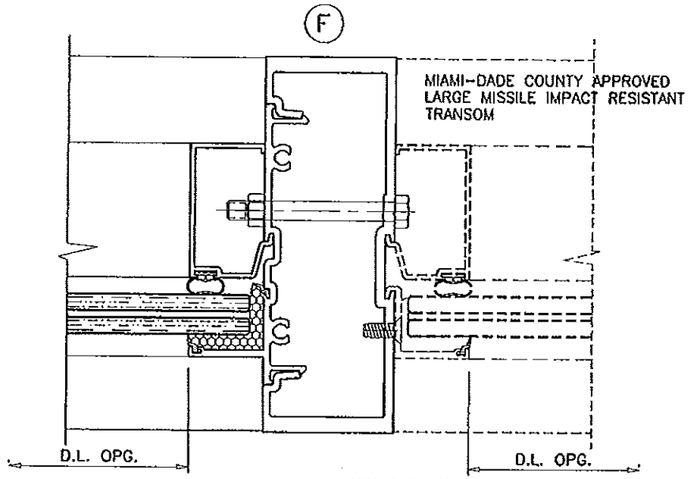


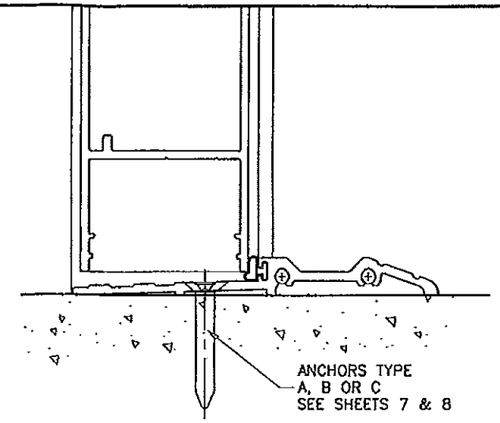


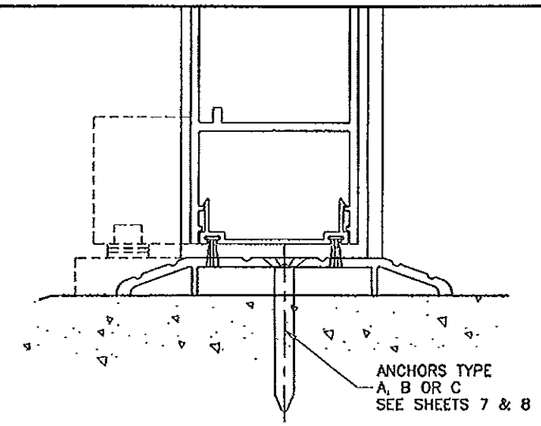


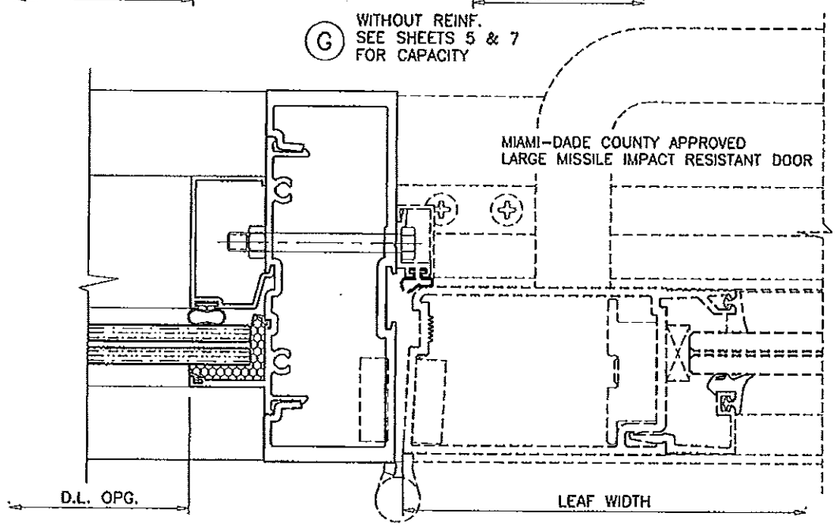


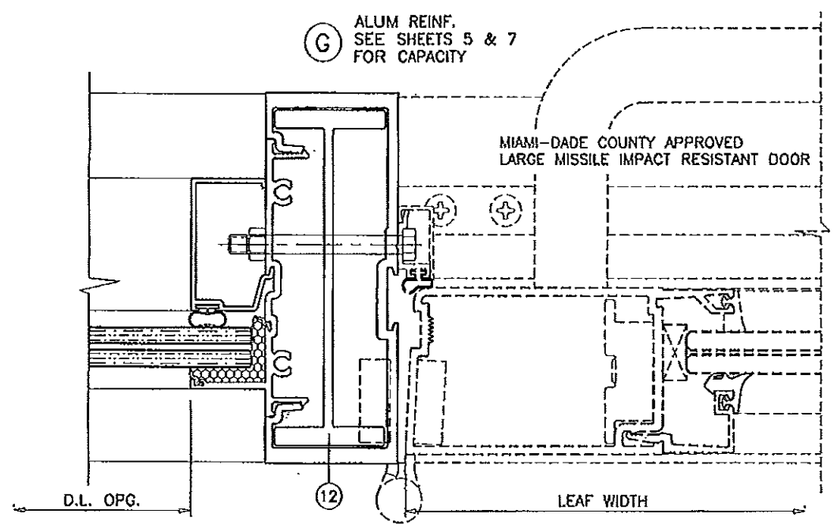


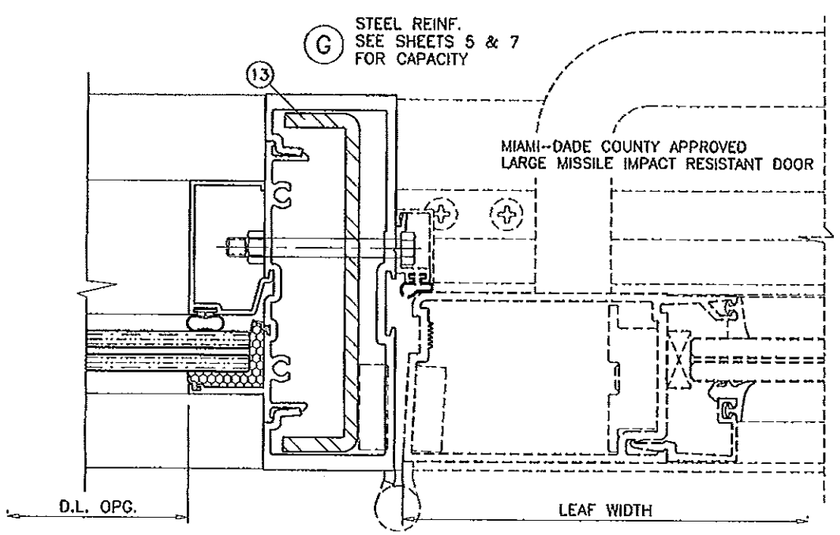


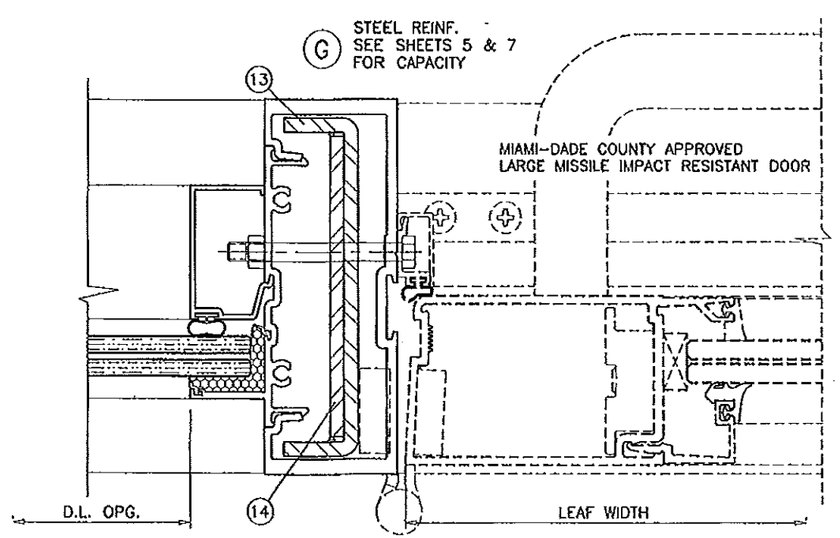


SEE SEPARATE NOA FOR DESIGN LOAD CAPACITY OF DOORS AND DOOR ANCHORS.

LOWER VALUES FROM DOORS NOA OR STOREFRONT SYSTEM CAPACITY CHARTS WILL APPLY TO ENTIRE SYSTEM.

PRODUCT RENEWED
as complying with the Florida
Building Code
Acceptance No 13-0115.06
Expiration Date April 2, 2018
By Manuel Perez
Miami Dade Product Control

PRODUCT REVISED
as complying with the Florida
Building Code 12-0308.36
Acceptance No
Expiration Date 04/03/2013
By
Miami Dade Product Control

Engr: JAVAD AHMAD
CIVIL
FLA. PE # 70592
C.A.N. 3538

MAR 07 2012


AL-FAROOQ CORPORATION
ENGINEERS & PRODUCT DEVELOPMENT
1235 S.W. 87 AVE
MIAMI, FLORIDA 33174
TEL (305) 264-8100 FAX. (305) 262-6978
STORE\W07-60ES


SERIES 8000 ALUM WINDOW WALL SYSTEM (L.M.I.)

E.S. WINDOWS, LLC
5220 N.W. 72 AVE. BAY #4
MIAMI, FL. 33166
TEL. (305) 624-7775 FAX. (305) 624-7777

revisions:

| no | date | by | description |
|---|---|---|---|
| A | 09.03.08 | | DOOR MULLION ADDED |
| B | 03.05.12 | | NO CHANGE THIS SHEET |

date: 08-03-07
scale: 1/2" = 1"
dr. by: HAMID
chk. by:

drawing no.
W07-60

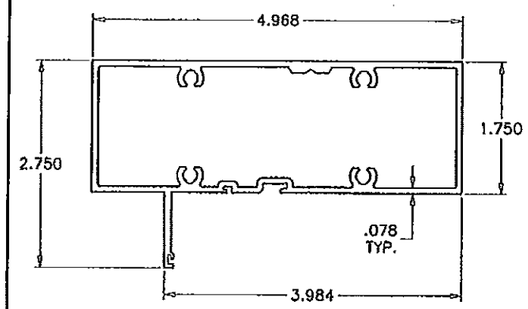


1 HOLLOW FRAME HEAD/SILL

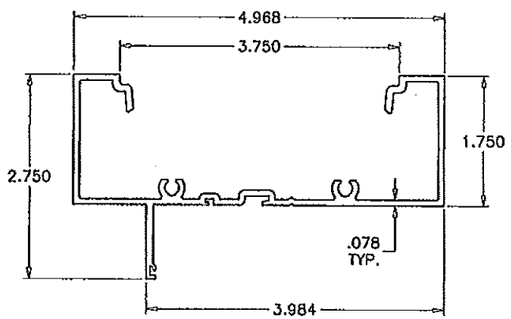


1A OPEN BACK FRAME HEAD/SILL

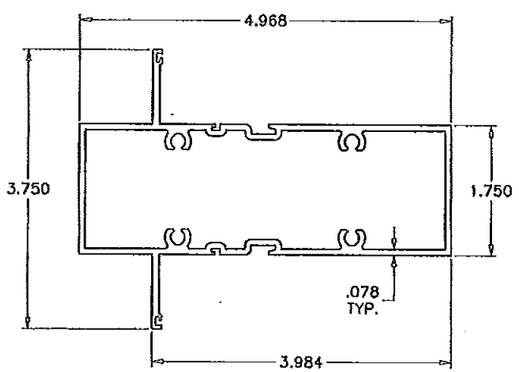


2 INTERMEDIATE HORIZONTAL

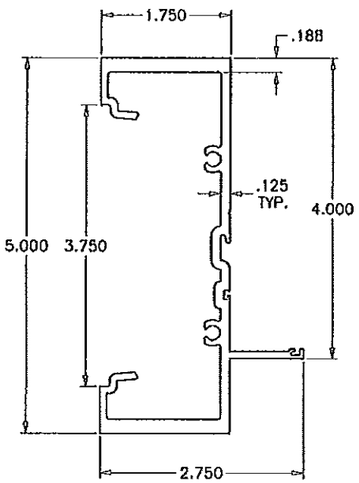


3 FRAME JAMB/MULLION

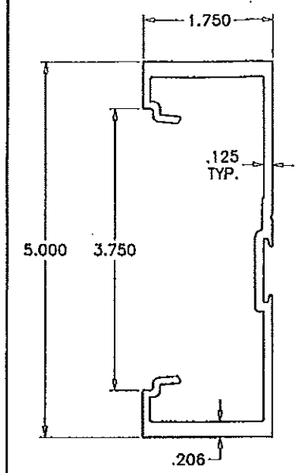


3A DOOR MULLION

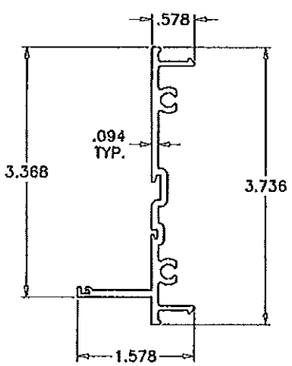


5 MULLION SNAP-IN MATE

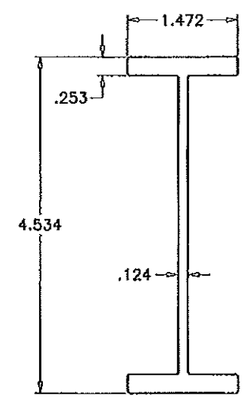


12 STIFFENER

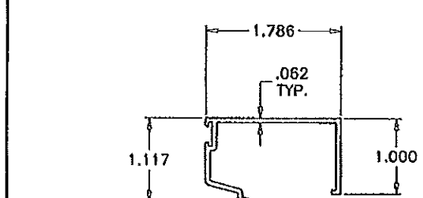


4 GLASS STOP

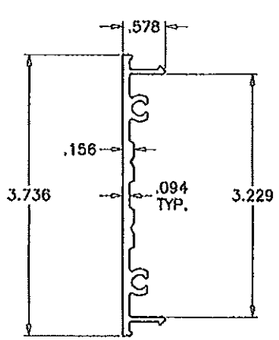


6 SHEAR CLIP

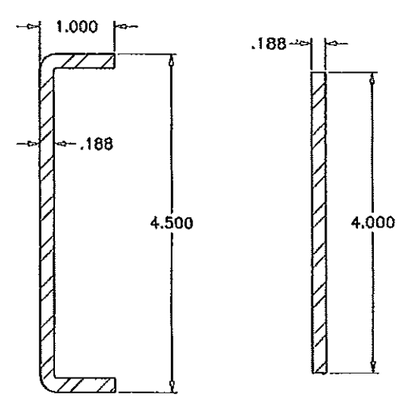


13 STEEL REINFORCING
36 KSI MIN.

14

| ITEM NO. | PART NUMBER | QUANTITY | DESCRIPTION | MATERIAL | MANF./SUPPLIER/REMARKS |
|---|---|---|---|---|---|
| 1 | ES8005 | AS REQD. | HOLLOW FRAME HEAD/SILL | 6005-T5 | - |
| 1A | ES8007 | AS REQD. | OPEN BACK FRAME HEAD/SILL | 6063-T6 | - |
| 2 | ES8004 | AS REQD. | INTERMEDIATE HORIZONTAL | 6063-T6 | - |
| 3 | ES8001 | AS REQD. | FRAME JAMB/MULLION | 6005-T5 | - |
| 3A | - | AS REQD. | DOOR MULLION | 6005-T5 | - |
| 4 | ES8006 | AS REQD. | GLASS STOP | 6063-T5 | - |
| 5 | ES8002 | AS REQD. | MULLION SNAP-IN MATE | 6005-T5 | - |
| 6 | ES8003 | AS REQD. | SHEAR CLIP | 6005-T5 | - |
| 7 | - | AS REQD. | INTERIOR BULB GASKET | VINYL | - |
| 8 | ES8009 | AS REQD. | SPACER/SILICONE STOP | VINYL | - |
| 8A | - | AS REQD. | BUTTON BUMPER | SILICONE | - |
| 9 | - | - | - | - | - |
| 10 | - | AS REQD. | SETTING BLOCK AT 1/4" POINTS | NEOPRENE | 3/16" X 1/2" X 2" LONG |
| 11 | #12 X 1-1/2" | 4/ CORNER | ASSEMBLY SCREWS PHSMS | STEEL | - |
| 12 | - | AS REQD. | MULLION STIFFENER | 6005-T5 | - |
| 13 | - | AS REQD. | MULLION REINFORCING CHANNEL | STEEL | - |
| 14 | - | AS REQD. | MULLION REINFORCING BAR | STEEL | - |

PRODUCT RENEWED
as complying with the Florida
Building Code
Acceptance No 13-0115.06
Expiration Date April 3, 2018
By
Miami Dade Product Control

Engr: JAVAD AHMAD
CIVIL
FLA. PE. # 70592
C.A.N. 3538

PRODUCT REVISED
as complying with the Florida
Building Code
Acceptance No 12-0308.36
Expiration Date 04/03/2013
By
Miami Dade Product Control

MAR 07 2012


AL-FAROOQ CORPORATION
ENGINEERS & PRODUCT DEVELOPMENT
1235 S.W. 87 AVE
MIAMI, FLORIDA 33174
TEL. (305) 264-2100 FAX. (305) 262-6978


STORE\W07-60ES

SERIES 8800 ALUM WINDOW WALL SYSTEM (L.M.I.)


E.S. WINDOWS, LLC
5220 N.W. 72 AVE. BAY #4
MIAMI, FL. 33166
TEL. (305) 624-7777 FAX. (305) 624-7775


| revisions: | | |
|---|---|---|
| no | date | by description |
| A | 09.03.08 | NO CHANGE THIS SHEET |
| B | 03.05.12 | UPDATED TO 2010 FBC |

date: 08-03-07
scale: 1/2" = 1"
dr. by: HAMID
chk. by:

drawing no.
W07-60

sheet 11 of 12

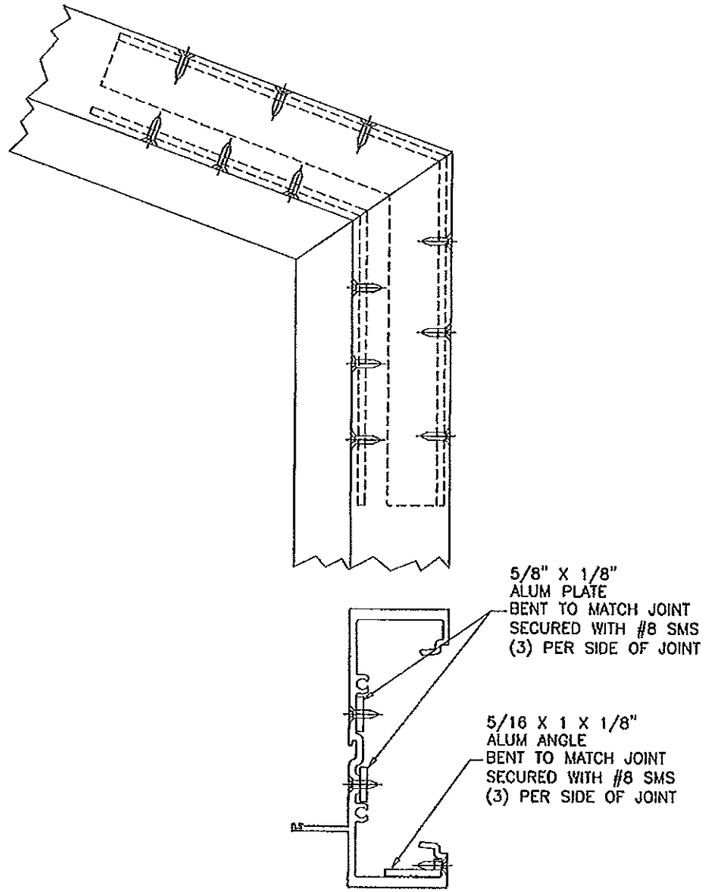


CIRCULAR OR ANGLED CORNERS

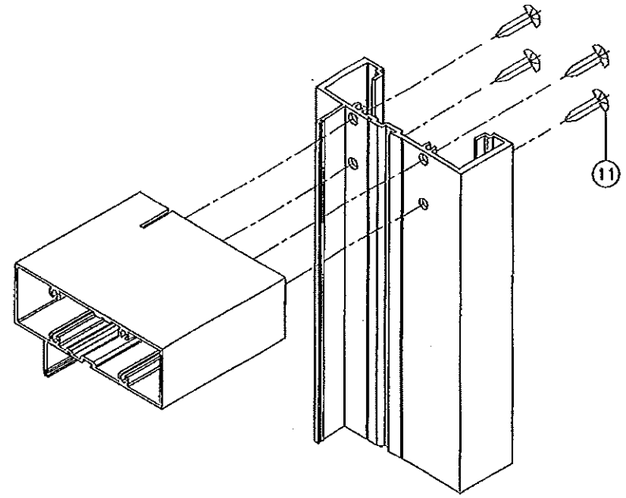


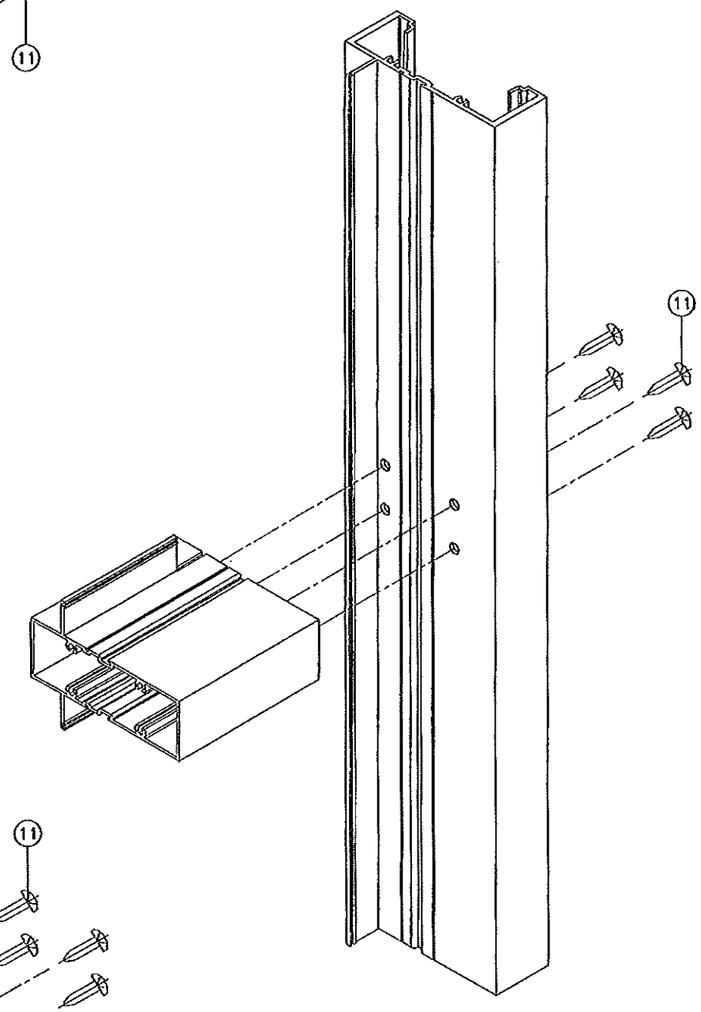


HORIZONTAL CORNER

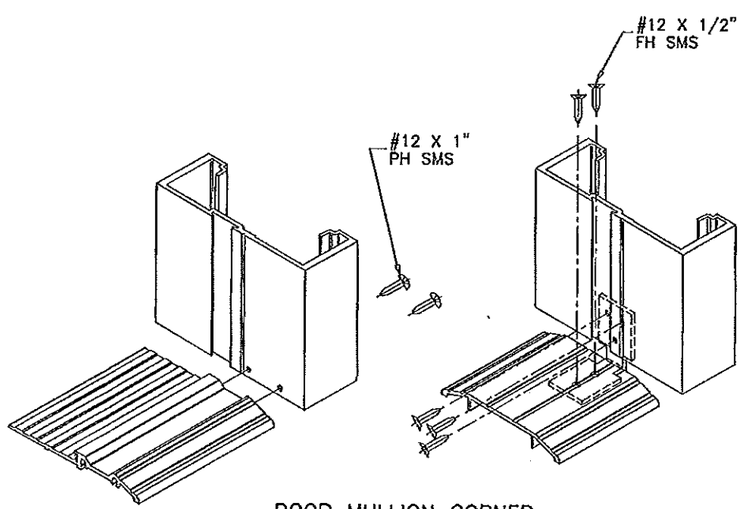


DOOR MULLION CORNER

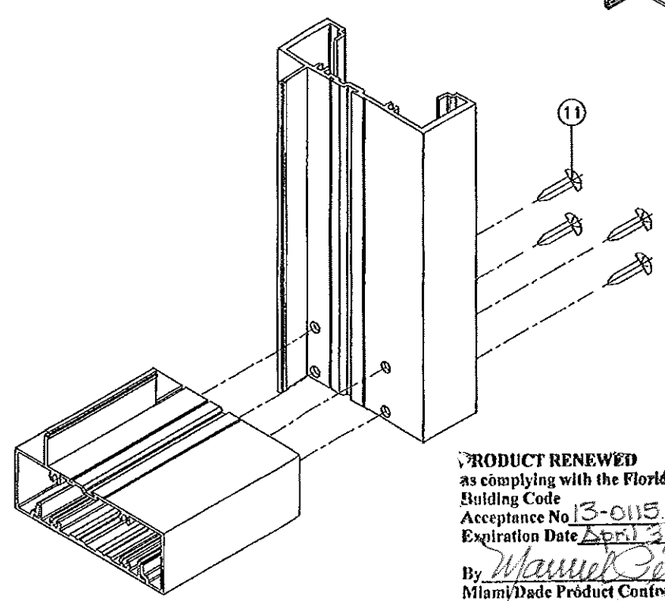


RECT. OR SQUARE CORNERS

PRODUCT RENEWED
as complying with the Florida
Building Code
Acceptance No 13-0115.06
Expiration Date April 2, 2018
By Manuel Perez
Miami/Dade Product Control

Engr: JAVAD AHMAD
CIVIL
FLA. PE # 70592
C.A.N. 3538

MAR 07 2012

PRODUCT REVISED
as complying with the Florida
Building Code
Acceptance No 12-0308.36
Expiration Date 04/03/2013
By
Miami Dade Product Control


AL-FAROOQ CORPORATION
ENGINEERS & PRODUCT DEVELOPMENT
1235 S.W. 87 AVE
MIAMI, FLORIDA 33174
TEL (305) 264-8100 FAX. (305) 262-6978
STORE\W07-60ES


SERIES 8000 ALUM WINDOW WALL SYSTEM (L.M.I.)

E.S. WINDOWS, LLC
5220 N.W. 72 AVE. BAY #4
MIAMI, FL. 33166
TEL (305) 624-7775 FAX. (305) 624-7777

revisions:

| no | date | by | description |
|---|---|---|---|
| A | 09.03.08 | | NO CHANGE THIS SHEET |
| B | 03.05.12 | | NO CHANGE THIS SHEET |

date: 08-03-07
scale: -
dr. by: HAMID
chk. by:

drawing no.
W07-60

sheet 12 of 12