MIAMI-DADE COUNTY
DEPARTMENT OF REGULATORY AND ECONOMIC RESOURCES (RER)
BOARD AND CODE ADMINISTRATION DIVISION

MIAMI-DADE COUNTY
PRODUCT CONTROL SECTION

11805 SW 26 Street, Room 208
Miami, Florida 33175-2474
T (786) 315-2590 F (786) 315-2599
www.miamidade.gov/economy

NOTICE OF ACCEPTANCE (NOA)

B & C Metals Enterprise, Inc.
8315 N.W. 74th Street
Miami, Florida 33166

SCOPE:
This NOA is being issued under the applicable rules and regulations governing the use of construction materials. The documentation submitted has been reviewed and accepted by Miami-Dade County RER- Product Control Section to be used in Miami Dade County and other areas where allowed by the Authority Having Jurisdiction (AHJ).

This NOA shall not be valid after the expiration date stated below. The Miami-Dade County Product Control Section (In Miami Dade County) and/or the AHJ (in areas other than Miami Dade County) reserve the right to have this product or material tested for quality assurance purposes. If this product or material fails to perform in the accepted manner, the manufacturer will incur the expense of such testing and the AHJ may immediately revoke, modify, or suspend the use of such product or material within their jurisdiction. RER reserves the right to revoke this acceptance, if it is determined by Miami-Dade County Product Control Section that this product or material fails to meet the requirements of the applicable building code.

This product is approved as described herein, and has been designed to comply with the High Velocity Hurricane Zone of the Florida Building Code.

DESCRIPTION: " Mid-Pressure and Hi-Pressure Blades " Aluminum Accordion Shutter

APPROVAL DOCUMENT: Drawing No. **12-177**, titled "Mid-Pressure & Hi-Pressure Blades Accordion Shutter System", sheets 1 through 15 of 15, prepared by Tilteco, Inc., dated 12/21/2012, last revision #1 dated 12/21/2012 signed and sealed by Walter A. Tillit Jr., P.E., bearing the Miami-Dade County Product Control Revision stamp with the Notice of Acceptance number and the expiration date by the Miami-Dade County Product Control Section.

MISSILE IMPACT RATING: Large and Small Missile Impact Resistant

LABELING: Each unit shall bear a permanent label with the manufacturer's name or logo, city, state, the following statement: "Miami-Dade County Product Control Approved", and NOA number, per TAS-201, TAS-202, and TAS-203, unless otherwise noted herein.

RENEWAL of this NOA shall be considered after a renewal application has been filed and there has been no change in the applicable building code negatively affecting the performance of this product.

TERMINATION of this NOA will occur after the expiration date or if there has been a revision or change in the materials, use, and/or manufacture of the product or process. Misuse of this NOA as an endorsement of any product, for sales, advertising or any other purposes shall automatically terminate this NOA. Failure to comply with any section of this NOA shall be cause for termination and removal of NOA.

ADVERTISEMENT: The NOA number preceded by the words Miami-Dade County, Florida, and followed by the expiration date may be displayed in advertising literature. If any portion of the NOA is displayed, then it shall be done in its entirety.

INSPECTION: A copy of this entire NOA shall be provided to the user by the manufacturer or its distributors and shall be available for inspection at the job site at the request of the Building Official.

This NOA **revises NOA # 08-0926.12** and consists of this page 1, evidence submitted pages E-1 & E-2 as well as approval document mentioned above.
The submitted documentation was reviewed by **Helmy A. Makar, P.E., M.S.**

MIAMI-DADE COUNTY APPROVED

03/28/2013

NOA No. 13-0117.03
Expiration Date: 12/04/2013
Approval Date: 03/28/2013

B & C Metals Enterprise, Inc.

NOTICE OF ACCEPTANCE: EVIDENCE SUBMITTED

1. EVIDENCE SUBMITTED UNDER PREVIOUS APPROVAL # 08-0926.12

A. DRAWINGS

1. *Drawing No. 07-301, titled "Mid-Pressure & Hi-Pressure Blades Accordion Shutter System", sheets 1 through 15 of 15, prepared by Tilteco, Inc., dated 12/04/2007, last revision #1 dated 11/05/2008 signed and sealed by Walter A. Tillit Jr., P.E.*

B. TESTS

1. *Test report on Large Missile Impact Test, Cyclic Wind Pressure Test, and Uniform Static Air Pressure Test of accordion shutter, prepared by Fenestration Testing Laboratory, Inc., Report No. 5534, dated 04/16/08, signed and sealed by Mr. Michael Wenzel, P.E.*
2. *Test report on Large Missile Impact Test and Cyclic Wind Pressure Test of accordion shutter, prepared by Fenestration Testing Laboratory, Inc., Report No. 5644, dated 06/21/08, signed and sealed by Mr. Carlos S. Rionda, P.E.*

C. CALCULATIONS

1. *Comparative analysis and anchor calculations prepared by Tilteco, Inc., dated 06/04/2008, signed and sealed by Walter A. Tillit Jr., P.E., on 09/11/08.*

D. QUALITY ASSURANCE

1. *By Miami-Dade County Building Code Compliance Office.*

E. MATERIAL CERTIFICATIONS

1. *Component drawings by ALU Cofer International.*

F. STATEMENTS

1. *Letter issued by Mr. Walter A. Tillit, Jr., P.E., dated September 11, 2008, stating that B & C Metals Enterprise, Mid-Pressure and Hi-Pressure Blades Accordion Shutter System conforms to the 2007 Florida Building Code Section 2413.*

2. NEW EVIDENCE SUBMITTED

A. DRAWINGS

1. *Drawing No. 12-177, titled "Mid-Pressure & Hi-Pressure Blades Accordion Shutter System", sheets 1 through 15 of 15, prepared by Tilteco, Inc., dated 12/21/2012, last revision #1 dated 12/21/2012 signed and sealed by Walter A. Tillit Jr., P.E., on 01/10/2013.*

Hefny A. Makar, P.E., M.S.
Product Control Unit Supervisor
NOA No. 13-0117.03
Expiration Date: 12/04/2013
Approval Date: 03/28/2013

NOTICE OF ACCEPTANCE: EVIDENCE SUBMITTED

B. TESTS

1. None.

C. CALCULATIONS

1. None.

D. QUALITY ASSURANCE

1. By Miami-Dade County Department of Regulatory and Economic Resources.

E. MATERIAL CERTIFICATIONS

1. None.

F. STATEMENTS

1. Letter issued by Mr. Walter A. Tillit, Jr., P.E., dated December 20, 2012, stating that B & C Metals Enterprise, Inc., Mid-Pressure and Hi-Pressure Blades Accordion Shutter System conforms to the 2010 Florida Building Code Section 2413.

Hemy A. Makar, P.E., M.S.
Product Control Unit Supervisor
NOA No. 13-0117.03
Expiration Date: 12/04/2013
Approval Date: 03/28/2013

GENERAL NOTES:

1. ACCORDION SHUTTER SYSTEM SHOWN ON THIS PRODUCT APPROVAL DOCUMENT (P.A.D.) HAS BEEN VERIFIED FOR COMPLIANCE IN ACCORDANCE WITH THE **2010** EDITION OF THE FLORIDA BUILDING CODE. THIS ACCORDION SHUTTER SYSTEM MAY BE INSTALLED AT HIGH VELOCITY HURRICANE ZONES.

   DESIGN WIND LOADS SHALL BE DETERMINED AS PER SECTION **1620** OF THE ABOVE MENTIONED CODE, USING ASCE 7-10 AND SHALL NOT EXCEED THE MAXIMUM A.S.D. DESIGN PRESSURE RATING INDICATED ON SHEETS 7, 8, 10 & 15.

   IN ORDER TO VERIFY THE ABOVE CONDITION, ULTIMATE DESING WIND LOADS DETERMINED PER ASCE 7-10 SHALL BE FIRST REDUCED TO A.S.D. DESIGN WIND LOADS BY MULTIPLYING THEM BY 0.6 IN ORDER TO COMPARE THESE W/ MAX. (A.S.D.) DESING PRESSURE RATINGS INDICATED ON SHEETS 7, 8, 10 & 15.

   IN ORDER TO VERIFY THAT COMPONENTS & ANCHORS ON THIS P.A.D., AS TESTED, WERE NOT OVERSTRESSED, A 33 % INCREASE IN ALLOWABLE STRESS FOR WIND LOADS WAS NOT USED IN THEIR ANALYSIS. A DURATION FACTOR CD = 1.60 WAS USED FOR VERIFICATION OF FASTENERS IN WOOD.

   ACCORDION SHUTTER SYSTEM'S ADEQUACY FOR IMPACT AND FATIGUE RESISTANCE HAS BEEN VERIFIED IN ACCORDANCE WITH SECTION **1626** OF THE ABOVE MENTIONED CODE AS PER FENESTRATION TESTING LABORATORY REPORT:
   -MID-PRESSURE & HI-PRESSURE BLADES ACCORDION SHUTTER SYSTEM #5534 AND 5644 AS PER PROTOCOLS TAS-201, TAS-202 AND TAS-203.

2. **MID-PRESSURE & HI-PRESSURE BLADES** ARE ENGINEERED TO WORK IN UNISON WITH EACH OTHER IN AREAS WHERE THE DESIGN PRESSURES TRANSITION FROM END ZONE 5 TO INTERIOR ZONE 4. EACH WIND ZONE MUST BE CLEARLY IDENTIFIED IN ACCORDANCE WITH SECTION 7. OF ASCE 7-10 STANDARD. ALL MOUNTING CONDITIONS AND FASTENER TYPES SCHEDULES MUST BE APPLIED TO THE CORRESPONDING WIND ZONE. THIS SHALL INCLUDE REQUIREMENTS FOR MIN. SEPARATION TO GLASS. DELIMITATION OF WIND ZONES 4 AND 5 AS WELL AS VALIDITY OF COMPONENTS FOR **MID-PRESSURE & HI-PRESSURE BLADES** ACCORDION SHUTTERS SYSTEMS FOR EITHER WIND ZONE SHALL BE PREPARED AND CERTIFIED BY A FLORIDA REGISTERED ENGINEER OR ARCHITECT BASED ON BUILDING CONFIGURATION AND ASCE 7-10 STANDARD. AND SHALL BE SUBMITTED TO THE BUILDING OFFICIAL AT THE TIME PERMIT IS APPLIED FOR.

3. STAINLESS STEEL SHEET METAL SCREWS USED AT LOUVER PIN SHALL BE # 14 x 2 3/4", 310-HT MINIMUM SERIES W/ 135.0 ksi YIELD STRENGTH & 180 ksi TENSILE STRENGTH. SCREWS SHALL BE COATED WITH XYLAN 5000 SERIES FLUOROPOLYMER COATINGS AS MANUFACTURED BY WHITFORD Co, BOX 507. WEST CHESTER PA. 19381.

4. ALL ALUMINUM EXTRUSIONS SHALL BE ALUMINUM ASSOCIATION ALLOY AND TEMPER AS INDICATED ON SHEET 2. MINIMUM YIELD STRENGTH FOR 6063-T6 ALLOY IS Fy=25.0 ksi. & FOR 6063-T5 ALLOY IS Fy=18.3 ksi.

5. ALL SCREWS TO BE STAINLESS STEEL 304 OR 316 SERIES W/ 50 ksi YIELD STRENGTH AND 90 ksi TENSILE STRENGTH OR CORROSION RESISTANT COATED CARBON STEEL AS PER DIN 50018 AND SHALL COMPLY W/ FLORIDA BUILDING CODE SECTION 2411.3.3.4.

6. BOLTS TO BE ASTM A-307 GALVANIZED STEEL, OR AISI 304 OR 316 SERIES STAINLESS STEEL WITH 35 ksi MINIMUM YIELD STRENGTH.

7. ANCHORS TO WALL SHALL BE AS FOLLOWS: (UNLESS OTHERWISE NOTED)

   (A) TO EXISTING POURED CONCRETE: f'c PER SCHEDULE ON SHEETS 10 & 15
   - 1/4" ø TAPCON, AS MANUFACTURED BY I.T.W. BUILDEX, INC.
   - 5/16"ø TAPCON XL ANCHORS, AS MANUFACTURED BY I.T.W. BUILDEX, INC.
   - 1/4" ø x 7/8" CALK-IN ANCHORS AS MANUFACTURED BY POWERS FASTENERS, INC.

   NOTES:

   A.1) MINIMUM EMBEDMENT OF 1/4"ø TAPCON ANCHORS INTO CONCRETE IS 1 3/4" & FOR 5/16"ø TAPCON XL ANCHORS INTO CONCRETE IS 2 1/4".

   A.2) 7/8" CALK-IN ANCHORS SHALL BE ENTIRELY EMBEDDED INTO THE POURED CONCRETE. NO EMBEDMENT INTO STUCCO SHALL BE PERMITTED. 1/4 ø-20 S.S SCREWS USED SHALL BE 1 1/2" LONG MINIMUM SHOULD STUCCO EXIST.

   A.3) IN CASE THAT PRECAST STONE, PRECAST CONCRETE PANELS, OR PAVERS BE FOUND ON THE EXISTING WALL FLOOR, ANCHORS SHALL BE LONG ENOUGH TO REACH THE MAIN STRUCTURE BEHIND SUCH PANELS. ANCHORAGE SHALL BE AS INDICATED ON NOTES A.1 & A.2 ABOVE.

   (B) TO EXISTING CONCRETE BLOCK WALL: ASTM C-90.
   - 1/4" ø TAPCON OR 1/4"ø MAXI-SET TAPCON, AS MANUFACTURED BY I.T.W. BUILDEX, INC.
   - 5/16"ø TAPCON XL ANCHORS, AS MANUFACTURED BY I.T.W. BUILDEX, INC.
   - 1/4" ø x 7/8" CALK-IN ANCHORS AS MANUFACTURED BY POWERS FASTENERS, INC.

   NOTES:

   B.1) MINIMUM EMBEDMENT OF 1/4"ø TAPCON ANCHORS & 5/16"ø TAPCON XL ANCHORS, INTO CONCRETE BLOCK UNIT IS 1 1/4".

   B.2) 7/8" CALK-IN ANCHORS SHALL BE ENTIRELY EMBEDDED INTO THE CONCRETE BLOCK UNIT. NO EMBEDMENT INTO STUCCO SHALL BE PERMITTED. 1/4" ø-20 S.S SCREWS USED SHALL BE 1 1/2" LONG MINIMUM SHOULD STUCCO EXIST AND 1" MINIMUM FOR WALLS WITH NO STUCCO.

   B.3) IN CASE THAT PRECAST STONE OR PRECAST CONCRETE PANELS BE FOUND ON THE EXISTING WALL, ANCHORS SHALL BE LONG ENOUGH TO REACH THE MAIN STRUCTURE BEHIND SUCH PANELS. ANCHORAGE SHALL BE AS INDICATED ON NOTES B.1 & B.2 ABOVE.

   (C) TO EXISTING WOOD FRAME BUILDING: SOUTHERN PINE #2 W/ G=0.55 MIN.
   - 1/4"ø TAPCON ITW/BUILDEX, INC. PER N.D.S.

   NOTES:

   C.1) MINIMUM THREADED PENETRATION OF 1/4"ø TAPCON INTO THE WOOD FRAME UNIT SHALL SEE SECTION AW THRU DW ON SHEETS 7 & 8, NO THREADED PENETRATION INTO STUCCO SHALL BE CONSIDERED AS PART OF THE REQUIRED THREADED PENETRATION.

   C.2) MINIMUM EDGE DISTANCE OF 1/4"ø TAPCON INTO WOOD SHALL BE 2"

   C.3) IN CASE THAT PRECAST STONE, PRECAST CONCRETE OR BRICK PANELS, VENEER OR PAVERS BE FOUND ON THE EXISTING WALL, ANCHORS SHALL BE LONG ENOUGH TO REACH THE MAIN SUBSTRATE BEHIND SUCH PANELS. MINIMUM THREADED PENETRATION SHALL BE AS INDICATED ON NOTE C.1 ABOVE.

8. ANCHORS SHALL BE INSTALLED FOLLOWING ALL OF THE RECOMENDATIONS AND SPECIFICATIONS OF THE ANCHORS MANUFACTURER.

9. IT SHALL BE THE RESPONSIBILITY OF THE CONTRACTOR TO VERIFY THE SOUNDNESS OF THE STRUCTURE WHERE SHUTTER IS TO BE ATTACHED TO INSURE PROPER ANCHORAGE. THIS SHUTTER SHALL ONLY BE ATTACHED TO CONCRETE, BLOCK OR WOOD FRAME BUILDINGS.

10. EACH UNIT MUST BEAR PERMANENT LABEL IN A VISIBLE PLACE WITH WARNING NOTE: DURING PERIODS OF HURRICANE WARNINGS HOME OWNER, TENANT, OR OTHERS, MUST PROPERLY CLOSE ALL CENTERMATES AND ENGAGE OR LOCK ALL LOCKS.

11. A PERMANENT SHUTTER MANUFACTURER'S LABEL SHALL BE PLACED ON THE EXPOSED SURFACE OF THE FEMALE CENTERMATE BLADE (COMPONENTS ⑧ OR ⑨).
    ONE LABEL SHALL BE PLACED FOR EVERY OPENING. LABEL SHALL READ AS FOLLOWS:
    "MID-PRESSURE AND HI-PRESSURE BLADES ACCORDION SHUTTER SYSTEM"
    B & C METALS ENTERPRISE.
    MIAMI, FLORIDA
    MIAMI-DADE COUNTY PRODUCT CONTROL APPROVED.

12. ACCORDION SHUTTER SYSTEM'S INSTALLATION SHALL COMPLY WITH SPECS INDICATED IN THIS DRAWING PLUS ANY BUILDING AND ZONING REGULATIONS PROVIDED BY THE JURISDICTION WHERE PERMIT IS APPLIED TO.

13. (A) THIS PRODUCT APPROVAL DOCUMENT (P.A.D.) PREPARED BY THIS ENGINEER IS GENERIC AND DOES NOT PROVIDE INFORMATION FOR A SITE SPECIFIC PROJECT; i.e. WHERE THE SITE CONDITIONS DEVIATE FROM THE P.A.D.

    (B) CONTRACTOR TO BE RESPONSIBLE FOR THE SELECTION, PURCHASE AND INSTALLATION INCLUDING LIFE SAFETY OF THIS PRODUCT BASED ON THIS PRODUCT APPROVAL PROVIDED HE/SHE DOES NOT DEVIATE FROM THE CONDITIONS DETAILED ON THIS DOCUMENT. CONSTRUCTION SAFETY AT SITE IS THE CONTRACTOR'S RESPONSIBILITY.

    (C) THIS PRODUCT APPROVAL DOCUMENT WILL BE CONSIDERED INVALID IF MODIFIED.

    (D) SITE SPECIFIC PROJECTS SHALL BE PREPARED BY A FLORIDA REGISTERED ENGINEER OR ARCHITECT WHICH WILL BECOME THE ENGINEER OF RECORD (E.O.R.) FOR THE PROJECT AND WHO WILL BE RESPONSIBLE FOR THE PROPER USE OF THE P.A.D. ENGINEER OF RECORD, ACTING AS DELEGATED ENGINEER TO THE P.A.D. ENGINEER, SHALL SUBMIT TO THIS LATTER THE SITE SPECIFIC DRAWINGS FOR REVIEW.

    (E) THIS P.A.D. SHALL BEAR THE DATE AND ORIGINAL SEAL AND SIGNATURE OF THE PROFESSIONAL ENGINEER THAT PREPARED IT.

PRODUCT REVISED
as complying with the Florida
Building Code
Acceptance No 13-0117.03
Expiration Date 12/04/2013
By
Miami Dade Product Control

WALTER A. TILLIT JR. LICENSE No. 44167 STATE OF FLORIDA PROFESSIONAL ENGINEER
P.E. SEAL/SIGNATURE/DATE

FLORIDA BUILDING CODE (High Velocity Hurricane Zone)

©2012 TILTECO INC.

TILTECO INC.
TILLIT TESTING & ENGINEERING COMPANY
8355 N.W. 36th. St., Ste. 305, VIRGINIA GARDENS, FLORIDA 33166
Phone : (305)871-1530 . Fax : (305)871-1531
EB-0006719
WALTER A. TILLIT Jr., P.E.
FLORIDA Lic. # 44167

MID-PRESSURE AND HI-PRESSURE BLADES ACCORDION SHUTTER SYSTEM

B & C METALS ENTERPRISE
8430 NW 72 STREET
MIAMI, FLORIDA 33166
PHONE:(305) 406-0944 / FAX:(305) 406-0946

REV. NO	DESCRIPTION	DATE	REV. No	DESCRIPTION	DATE
1	OLD 07-301	12/21/12	3	-	-
2	-	-	4	-	-

DRAWN BY: A.G.
12/21/12 DATE
12-177 DRAWING No
SHEET 1 OF 15

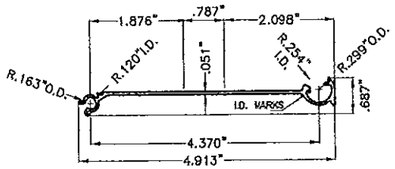

(1) MID-PRESSURE BLADE
6063-T5 ALLOY
Fy (Min.) = 18.3 KSI

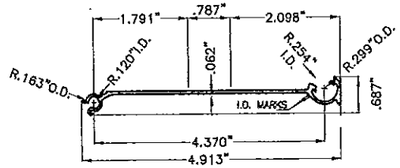

(2) HI-PRESSURE BLADE
6063-T5 ALLOY
Fy (Min.) = 18.3 KSI

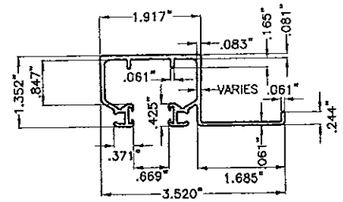

(3) CEILING HEADER FOR (1)
6063-T6 ALLOY

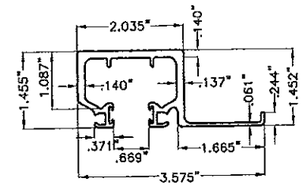

(4) CEILING HEADER FOR (2)
6063-T6 ALLOY

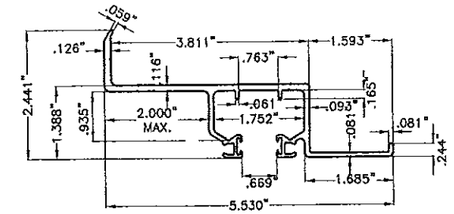

(7) WALL MOUNT HEADER FOR (1) & (2)
6063-T6 ALLOY

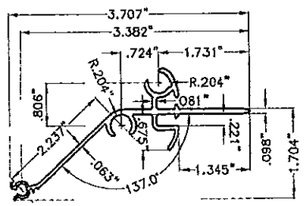

(8) SLIM CENTERMATE FOR (1)
6063-T6 ALLOY

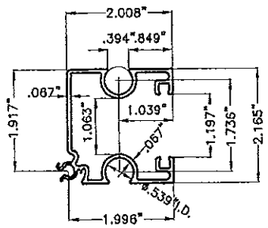

(9) LARGE CENTERMATE FOR (2)
6063-T6 ALLOY

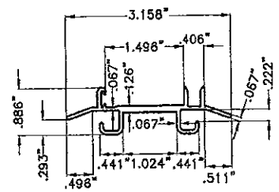

(10) INSERT FOR (9)
6063-T6 ALLOY

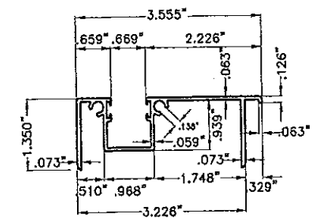

(11) SILL FOR (1) & (2)
6063-T6 ALLOY

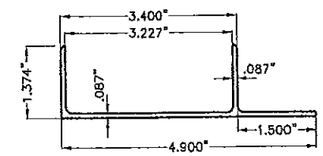

(12) SILL ADJUSTABLE FOR (11)
6063-T6 ALLOY

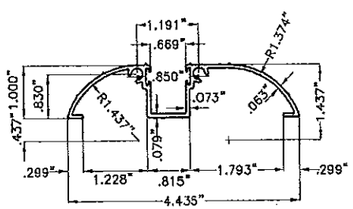

(13) THRESHOLD FOR (1) & (2)
6063-T6 ALLOY

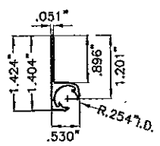

(14) STARTER
6063-T6 ALLOY

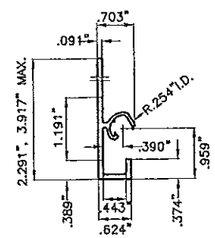

(15) ENCLOSURE
6063-T6 ALLOY

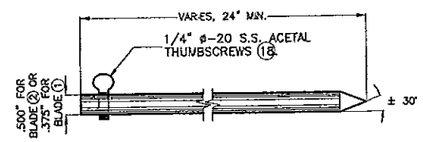

(16) LOCKING ROD FOR (1) & (2)
6063-T6 ALLOY AND TEMPER

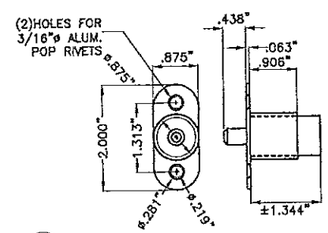

(17) PUSH BUTTON LOCK FOR (8)

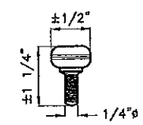

(18) 1/4"ø-20 AISI 304 SERIES S.S. THUMBSCREWS FOR (16)

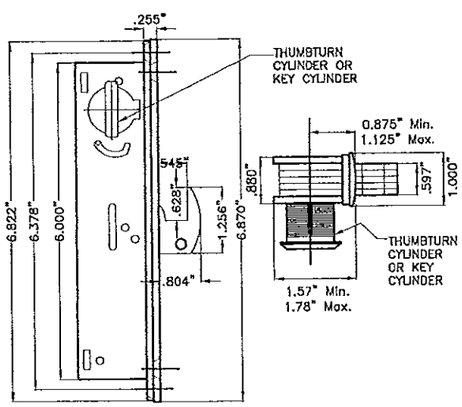

(23) MORTISE LOCK FOR (9)
6063-T6 ALLOY

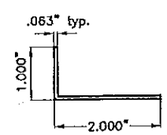

(19) ANGLE 1"x2"x1/16" FOR (1) & (2)
6063-T6 ALLOY

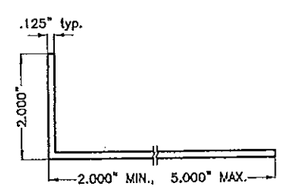

(20) ANGLE 2"x5"(MAX.)x1/8" FOR (1)
6063-T6 ALLOY

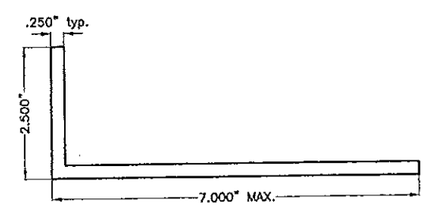

(21) ANGLE 2.500"x7"(MAX.)x1/4" FOR (2)
6063-T6 ALLOY

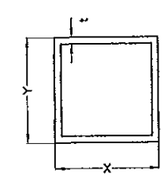

X	Y	t
2"	2"	0.125"
3"	3"	0.090"

(22) CORNER POST FOR (1) & (2)
6063-T6 ALLOY

PRODUCT REVISION
as complying with the Florida Building Code
Acceptance No 13-0117.03
Expiration Date 12/04/2013
By Michael Dade Product Control

COMPONENTS

SCALE: 3/8"=1"

WALTER A. TILLIT JR. LICENSE No. 44167 STATE OF FLORIDA PROFESSIONAL ENGINEER
SEAL, SIGNATURE, DATE

©2012 TILTECO INC.

TILTECO INC.
TILLIT TESTING & ENGINEERING COMPANY
6355 N.W. 36th. St., Ste. 305, VIRGINIA GARDENS, FLORIDA 33166
Phone : (305)871-1520 . Fax : (305)871-1531
EB-0006719
WALTER A. TILLIT Jr., P.E.
FLORIDA Lic. # 44167

FLORIDA BUILDING CODE (High Velocity Hurricane Zone)

MID-PRESSURE AND HI-PRESSURE BLADES
ACCORDION SHUTTER SYSTEM

B & C METALS ENTERPRISE
8430 NW 72 STREET
MIAMI, FLORIDA 33166
PHONE:(305) 406-0944 / FAX:(305) 406-0946

REV. NO	DESCRIPTION	DATE	REV. No	DESCRIPTION	DATE
1	OLD 07-301	12/21/12	3	–	–
2	–	–	4	–	–

DRAWN BY: A.G.
12/21/12 DATE
12-177 DRAWING No
SHEET 2 OF 15

♦ NOTES ON LOCK (17) & LOCKING RODS (16)

1. ONE LOCK (17) SHALL ALWAYS BE USED AT SHUTTER'S MIDSPAN AT ALL INSTALLATIONS. LOCK MAY BE INSIDE/OUTSIDE INSTALLED ATTACHED TO (8) W/(2) 1/4"ø-20x1/2" LONG FLAT HEAD S.S. M.S. LOCATION OF LOCK SHALL BE AS SHOWN ON TYPICAL SHUTTER ELEVATION.

2. (2) LOCKING RODS (16) SHALL ALWAYS BE USED TOP & BOTTOM AT SHUTTER'S CENTERMATES (8) AT ALL INSTALLATIONS. LOCKING RODS (16) SHALL BE SECURED W/ 1/4"-20 THUMBSCREW (18).

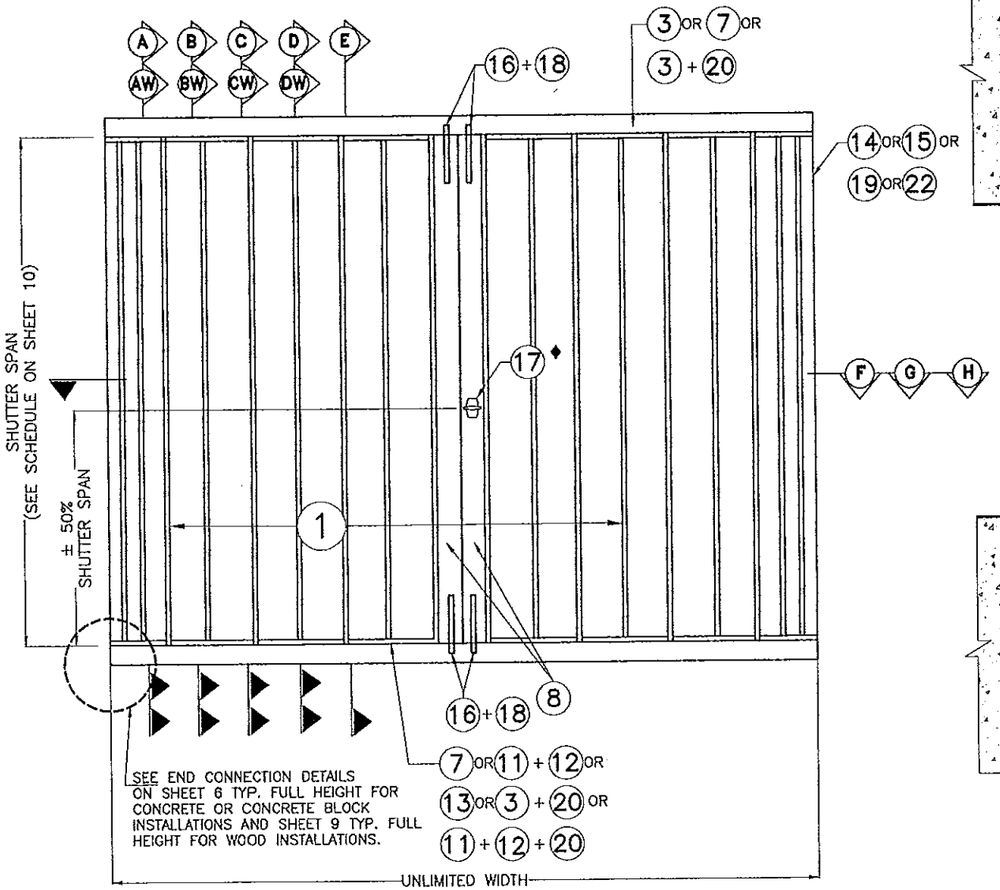

TYPICAL ELEVATION FOR MID-PRESSURE BLADE ♣

N. T. S.

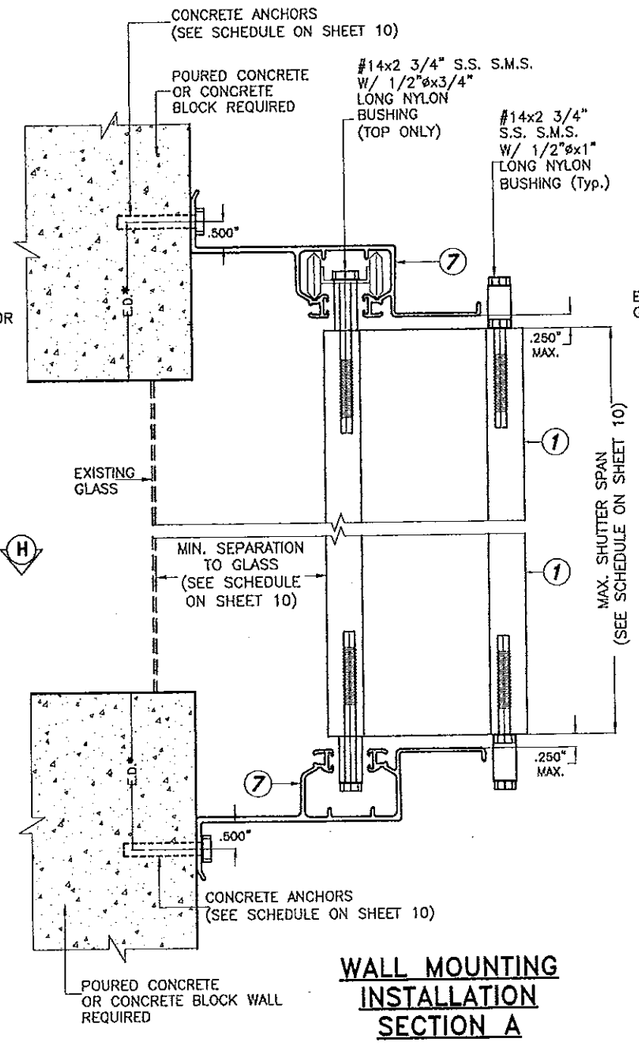

WALL MOUNTING INSTALLATION SECTION A

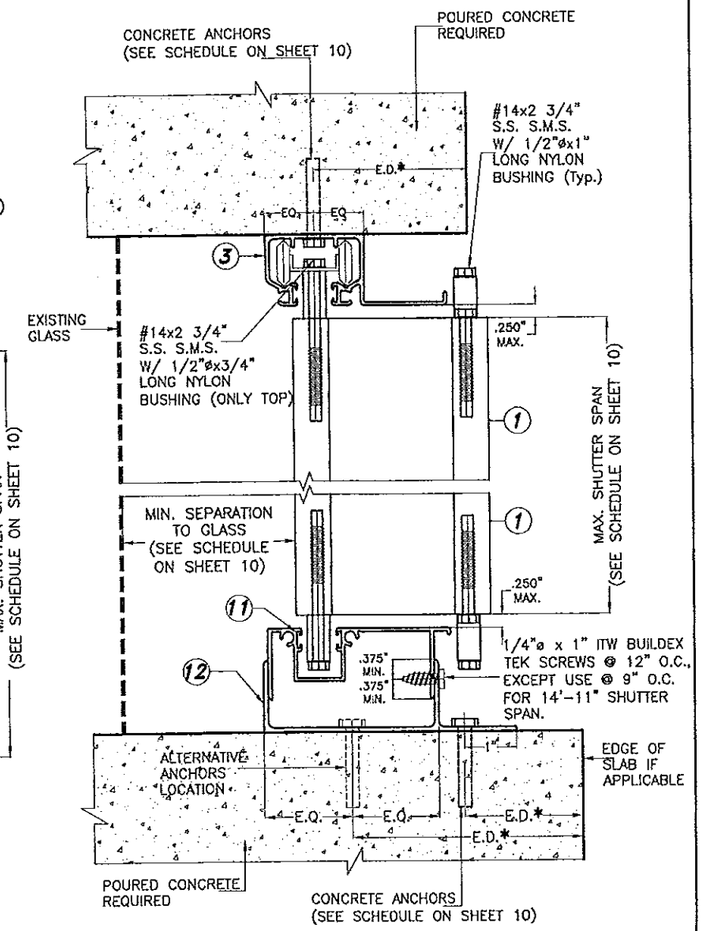

CEILING & FLOOR** MOUNTING INSTALLATION SECTION B

PRODUCT REVISED
as complying with the Florida Building Code
Acceptance No 13-0117.03
Expiration Date 12/04/2013
By Miami Dade Product Control

INSTALLATIONS DETAILS FOR MID-PRESSURE BLADE

SCALE : 3/8" = 1"

♣ NOTE:
SEE SECTIONS A THRU D ON SHEETS 3 & 4.
SEE SECTIONS AW THRU DW ON SHEETS 7 & 8.

NOTE FOR COMBINATION OF SECTIONS:

1- MOUNTING SECTIONS CAN BE COMBINED IN ANY WAY TO SUIT ANY INSTALLATION.

* E.D. = EDGE DISTANCE (SEE SPECIFICATIONS ON SHEET 10)

** NOTE:

THIS INSTALLATION SHALL BE REMOVABLE WHEN PERFORMED ADJACENT TO AN OPERABLE EXIT OR ENTRANCE

WALTER A. TILLIT JR. LICENSE No. 44167 STATE OF FLORIDA PROFESSIONAL ENGINEER

P.E. SEAL / SIGNATURE / DATE

FLORIDA BUILDING CODE (High Velocity Hurricane Zone)

©2012 TILTECO INC.

TILTECO INC.
TILLIT TESTING & ENGINEERING COMPANY
8355 N.W. 36th. St., Ste. 305, VIRGINIA GARDENS, FLORIDA 33166
Phone : (305)871-1330 . Fax : (305)871-1831
EB-0006719
WALTER A. TILLIT Jr., P.E.
FLORIDA Lic. # 44167

MID-PRESSURE AND HI-PRESSURE BLADES ACCORDION SHUTTER SYSTEM

B & C METALS ENTERPRISE
8430 NW 72 STREET
MIAMI, FLORIDA 33166
PHONE:(305) 408-0944 / FAX:(305) 408-0946

REV. NO	DESCRIPTION	DATE	REV. No	DESCRIPTION	DATE
1	OLD 07-501	12/21/12	3	–	–
2	–	–	4	–	–

DRAWN BY: A.G.
12/21/12 DATE
12-177 DRAWING No
SHEET 3 OF 15

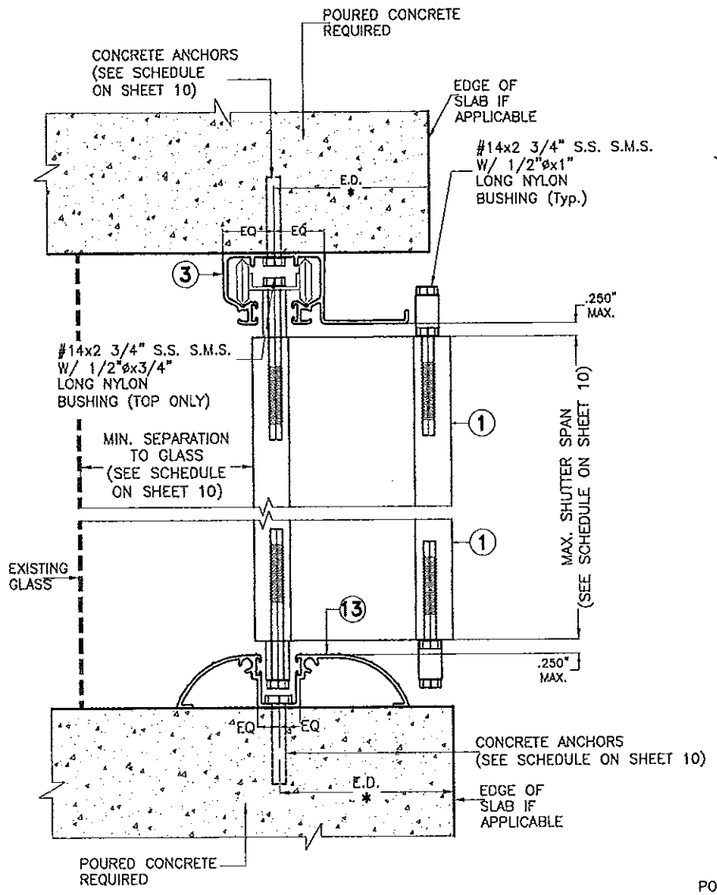

SPECIAL CEILING & FLOOR MOUNTING INSTALLATION SECTION C

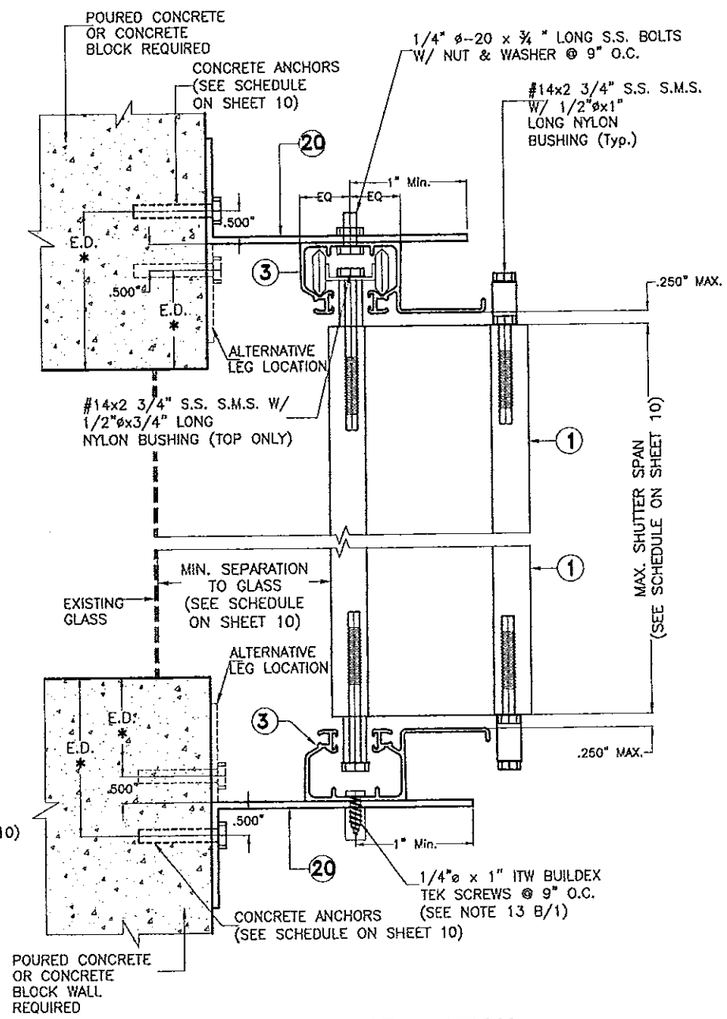

BUILD-OUT INSTALLATION SECTION D

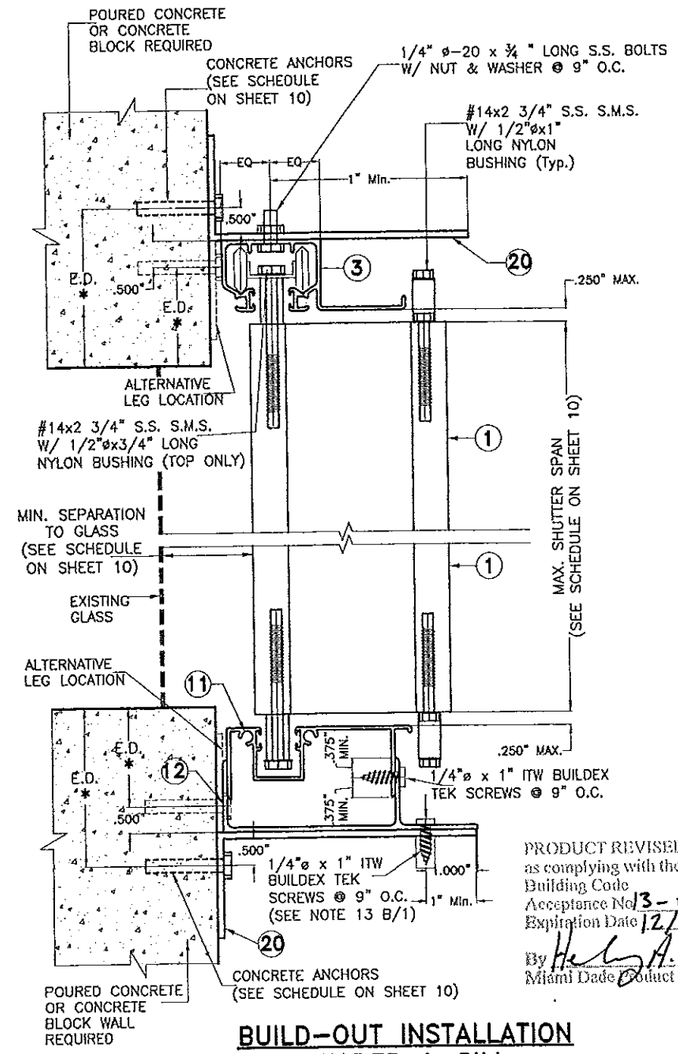

BUILD-OUT INSTALLATION HEADER & SILL SECTION E

PRODUCT REVISED
as complying with the Florida Building Code
Acceptance No 13-0117.03
Expiration Date 12/04/2013
By Miami Dade Product Control

INSTALLATIONS DETAILS FOR MID-PRESSURE BLADE

SCALE : 3/8" = 1"

FLORIDA BUILDING CODE (High Velocity Hurricane Zone)

NOTE FOR COMBINATION OF SECTIONS:

1- MOUNTING SECTIONS CAN BE COMBINED IN ANY WAY TO SUIT ANY INSTALLATION.

* E.D. = EDGE DISTANCE (SEE SPECIFICATIONS ON SHEET 10)

WALTER A. TILLIT JR. LICENSE No 44167 STATE OF FLORIDA PROFESSIONAL ENGINEER

SEAL / SIGNATURE / DATE

©2012 TILTECO INC.

TILTECO INC.
TILLIT TESTING & ENGINEERING COMPANY
8355 N.W. 36th. St., Ste. 305, VIRGINIA GARDENS, FLORIDA 33166
Phone : (305)871-1530 . Fax : (305)871-1531
EB-0006719
WALTER A. TILLIT Jr., P.E.
FLORIDA Lic. # 44167

MID-PRESSURE AND HI-PRESSURE BLADES ACCORDION SHUTTER SYSTEM

B & C METALS ENTERPRISE
8430 NW 72 STREET
MIAMI, FLORIDA 33166
PHONE:(305) 406-0944 / FAX:(305) 406-0946

REV. NO	DESCRIPTION	DATE	REV. No	DESCRIPTION	DATE
1	OLD 07-301	12/21/12	3	--	--
2	--	--	4	--	--

DRAWN BY: A.G.
12/21/12 DATE
12-177 DRAWING No
SHEET 4 OF 15

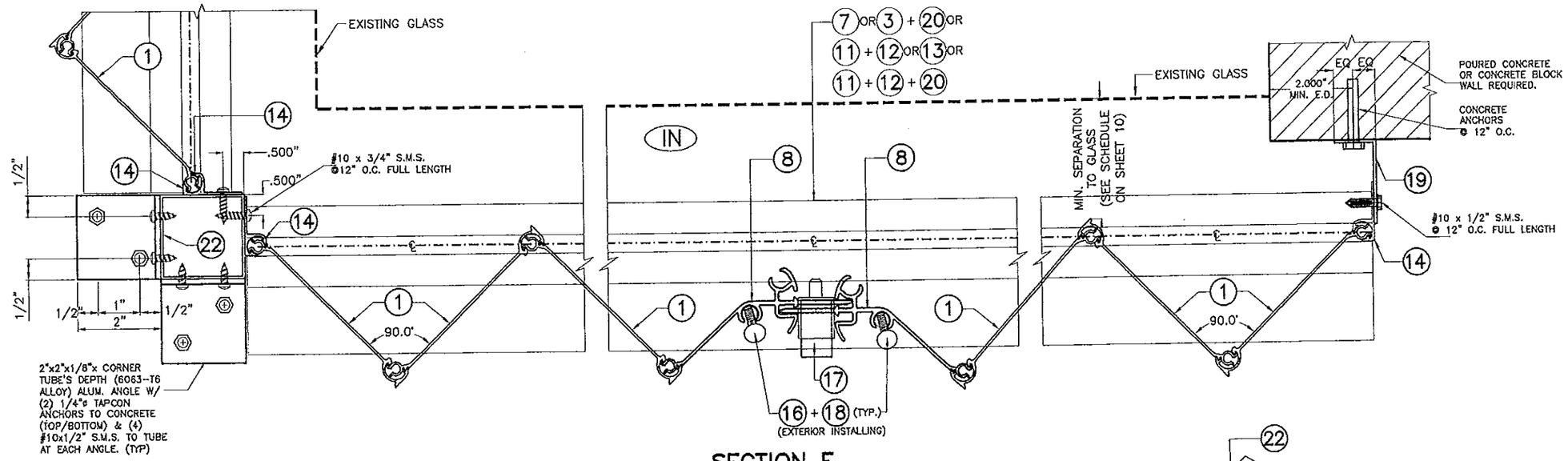

SECTION F

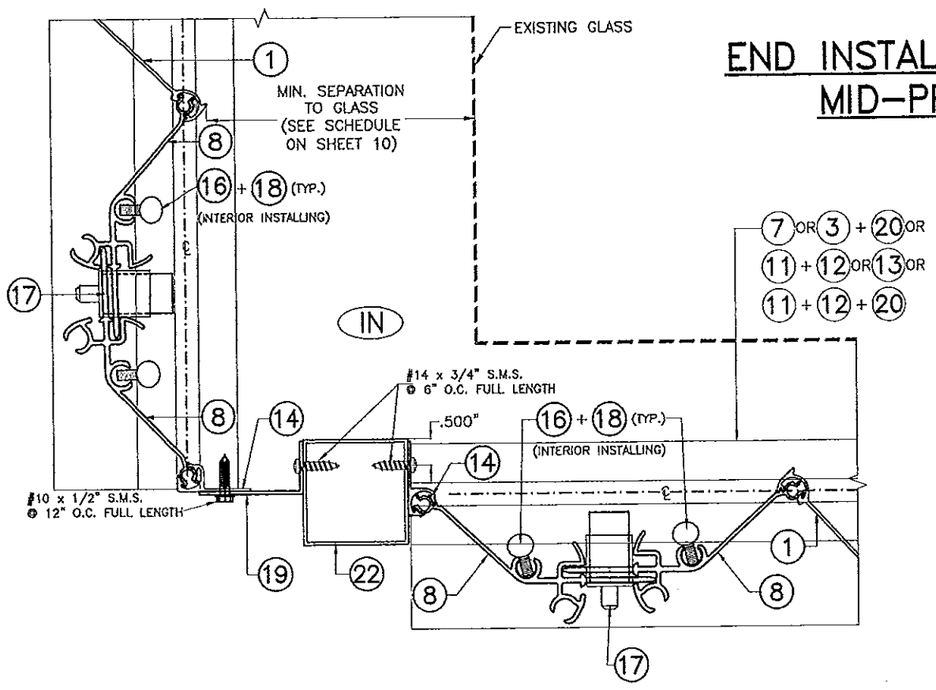

SECTION G

END INSTALLATION DETAILS FOR MID-PRESSURE BLADE

SCALE : 3/8" = 1"

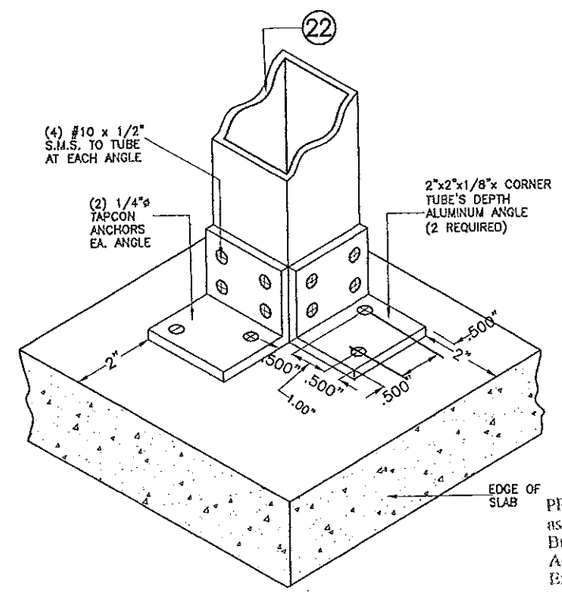

CORNER POST ISOMETRIC

(TYP. AT TOP AND BOTTOM SLABS)
N.T.S.

PRODUCT REVISED
as complying with the Florida
Building Code
Acceptance No 13-0117.03
Expiration Date 12/04/2013
By
Miami Dade Product Control

FLORIDA BUILDING CODE (High Velocity Hurricane Zone)

WALTER A. TILLIT JR. LICENSE No. 44167 STATE OF FLORIDA PROFESSIONAL ENGINEER

SEAL/SIGNATURE/DATE

©2012 TILTECO INC.

TILTECO INC.
TILLIT TESTING & ENGINEERING COMPANY
8355 N.W. 36th. St., Ste. 305, VIRGINIA GARDENS, FLORIDA 33166
Phone : (305)871-1530 . Fax : (305)871-1531
EB-0006719
WALTER A. TILLIT Jr., P.E.
FLORIDA Lic. # 44167

MID-PRESSURE AND HI-PRESSURE BLADES ACCORDION SHUTTER SYSTEM

B & C METALS ENTERPRISE
8430 NW 72 STREET
MIAMI, FLORIDA 33166
PHONE:(305) 406-0944 / FAX:(305) 406-0948

REV. NO	DESCRIPTION	DATE	REV. No	DESCRIPTION	DATE
1	OLD 07-301	12/21/12	3	–	–
2	–	–	4	–	–

DRAWN BY: A.G.
12/21/12 DATE
12-177 DRAWING No
SHEET 5 OF 15

INSTALLATION FOR MID-PRESSURE BLADE INTO CONCRETE OR CONCRETE BLOCK WALL

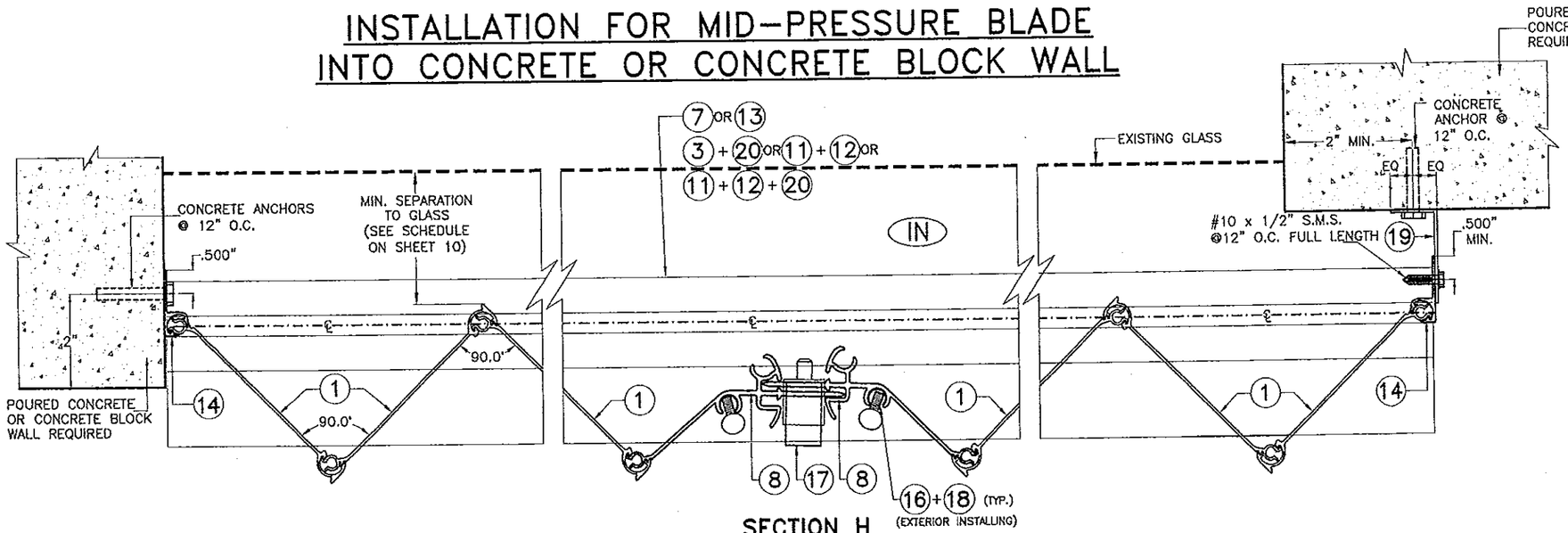

SECTION H
SCALE : 3/8" = 1"

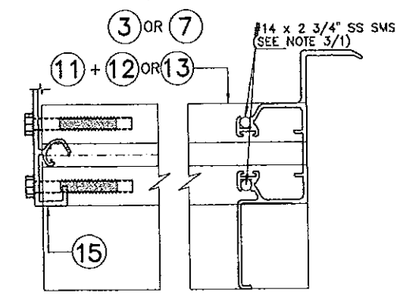

PLAN VIEW Y
DETAIL 7
SCALE : 3/8" = 1"

END INSTALLATIONS FOR MID-PRESSURE BLADE

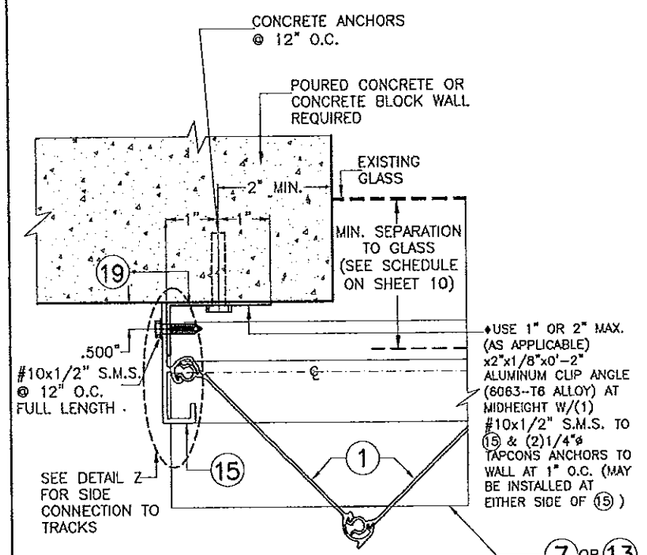

END CONECTION DETAIL 1
SCALE : 3/8" = 1"

7 OR 13
3 + 20 OR 11 + 12
11 + 12 + 20

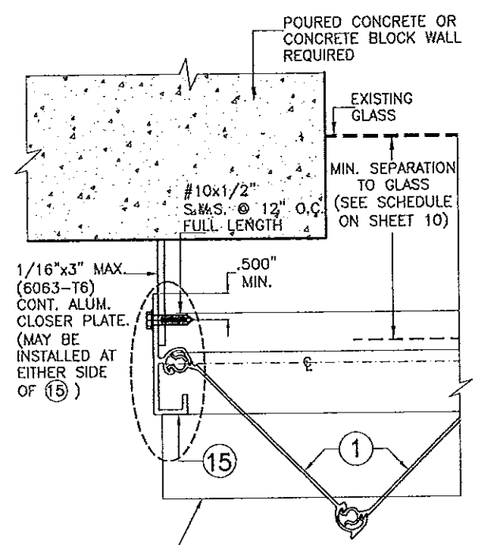

END CONECTION DETAIL 2
SCALE : 3/8" = 1"

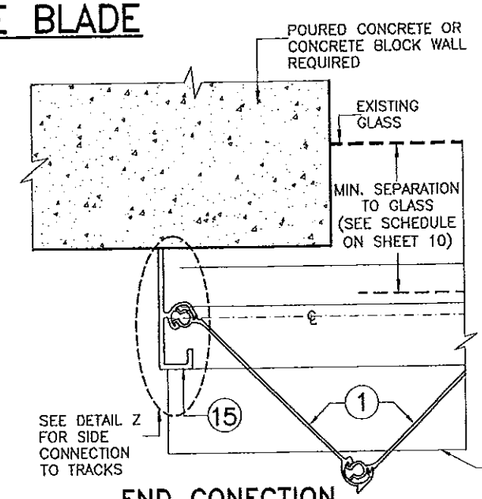

END CONECTION DETAIL 3
SCALE : 3/8" = 1"

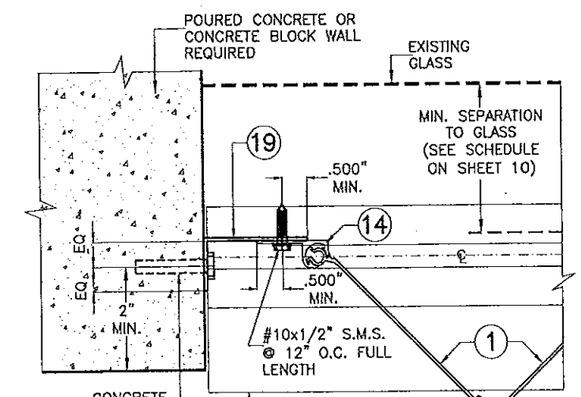

END CONECTION DETAIL 4
SCALE : 3/8" = 1"

7 OR 13
3 + 20 OR 11 + 12
11 + 12 + 20

PRODUCT REVISED
as complying with the Florida Building Code
Acceptance No 13-0117.03
Expiration Date 12/04/2013
By Miami Dade Product Control

FLORIDA BUILDING CODE (High Velocity Hurricane Zone)

WALTER A. TILLIT JR. LICENSE No. 44167 STATE OF FLORIDA PROFESSIONAL ENGINEER
SIGNATURE/DATE

©2012 TILTECO INC.

TILTECO INC.
TILLIT TESTING & ENGINEERING COMPANY
6355 N.W. 36th. St. Ste. 303, VIRGINIA GARDENS, FLORIDA 33166
Phone : (305)871-1530 . Fax : (305)871-1531
EB-0006719
WALTER A. TILLIT Jr., P.E.
FLORIDA Lic. # 44167

MID-PRESSURE AND HI-PRESSURE BLADES ACCORDION SHUTTER SYSTEM

B & C METALS ENTERPRISE
8430 NW 72 STREET
MIAMI, FLORIDA 33166
PHONE:(305) 406-0944 / FAX:(305) 406-0946

REV. NO	DESCRIPTION	DATE	REV. No	DESCRIPTION	DATE
1	OLD 07-501	12/21/12	3	–	–
2	–	–	4	–	–

DRAWN BY: A.G.
12/21/12 DATE
12-177 DRAWING No
SHEET 6 OF 15

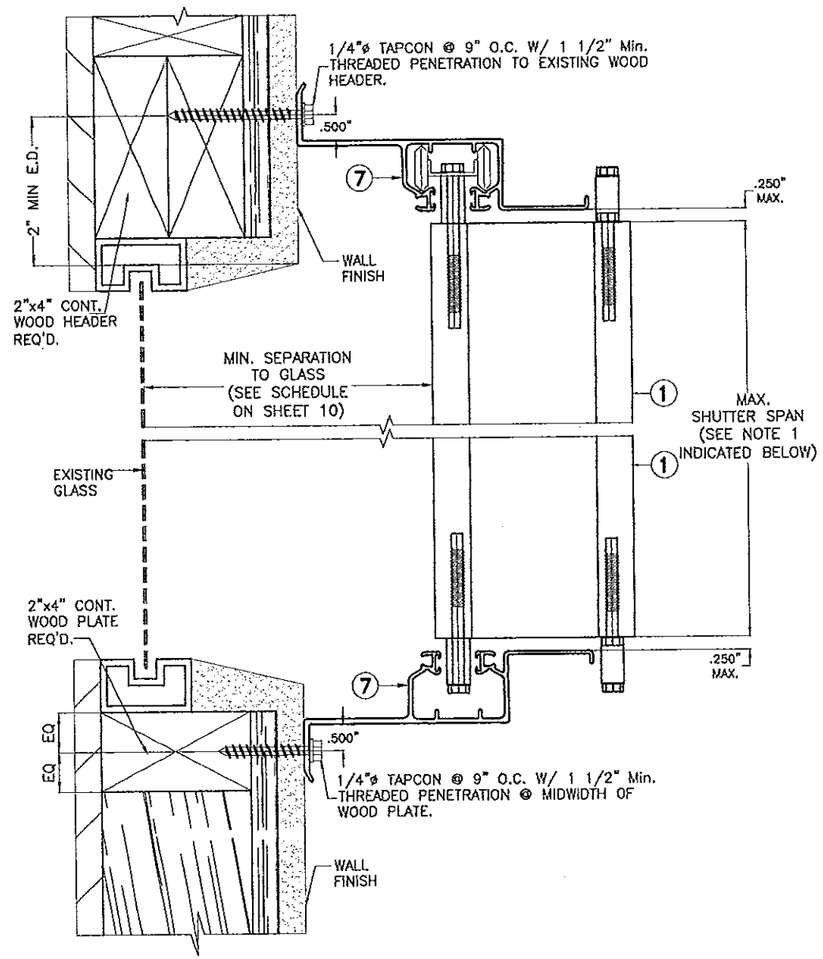

WALL MOUNTING
SILL INSTALLATION
SECTION AW

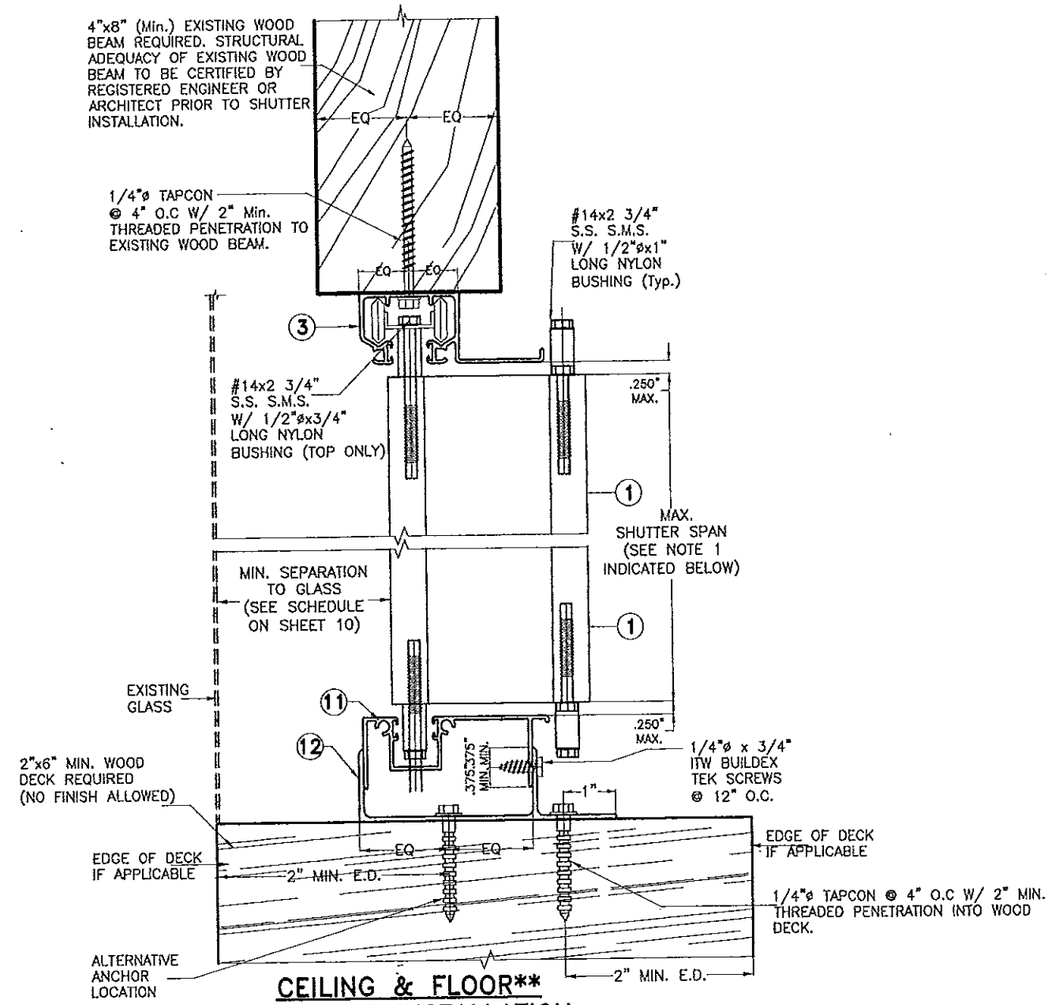

CEILING & FLOOR**
MOUNTING INSTALLATION
SECTION BW

INSTALLATION DETAILS ON EXISTING WOOD BUILDINGS FOR MID-PRESSURE BLADE.

SCALE : 3/8" = 1"

PRODUCT REVISED
as complying with the Florida Building Code
Acceptance No 13-0117.03
Expiration Date 12/04/2013
By
Miami Dade Product Control

NOTE FOR COMBINATION OF SECTIONS:

MOUNTING SECTIONS CAN BE COMBINED IN ANY WAY TO SUIT ANY INSTALLATION.

NOTES:

1. INSTALLATIONS ARE ONLY VALID FOR BUILDINGS WITH A.S.D. DESIGN PRESSURE RATING UP TO 80 p.s.f. AND 9'-0" Max. SHUTTER SPAN.
2. FOR WOOD FRAME CONSTRUCTION: WOOD MEMBERS TO BE SOUTHERN PINE No. 2, W/ SPECIFIC DENSITY OF 0.55 OR EQUAL.

WALTER A. TILLIT JR. LICENSE No. 44167 STATE OF FLORIDA PROFESSIONAL ENGINEER

SIGNATURE DATE

©2012 TILTECO INC.

TILTECO INC.
TILLIT TESTING & ENGINEERING COMPANY
8355 N.W. 36th St., Ste. 305, VIRGINIA GARDENS, FLORIDA 33166
Phone : (305)871-1530 . Fax : (305)871-1531
EB-0006719
WALTER A. TILLIT Jr., P.E.
FLORIDA Lic. # 44167

FLORIDA BUILDING CODE (High Velocity Hurricane Zone)

MID-PRESSURE AND HI-PRESSURE BLADES ACCORDION SHUTTER SYSTEM

B & C METALS ENTERPRISE
8430 NW 72 STREET
MIAMI, FLORIDA 33166
PHONE:(305) 406-0944 / FAX:(305) 406-0946

REV. NO	DESCRIPTION	DATE	REV. No	DESCRIPTION	DATE
1	OLD 07-301	12/21/12	3	--	--
2	--	--	4	--	--

DRAWN BY: A.G.
12/21/12 DATE
12-177 DRAWING No
SHEET 7 OF 15

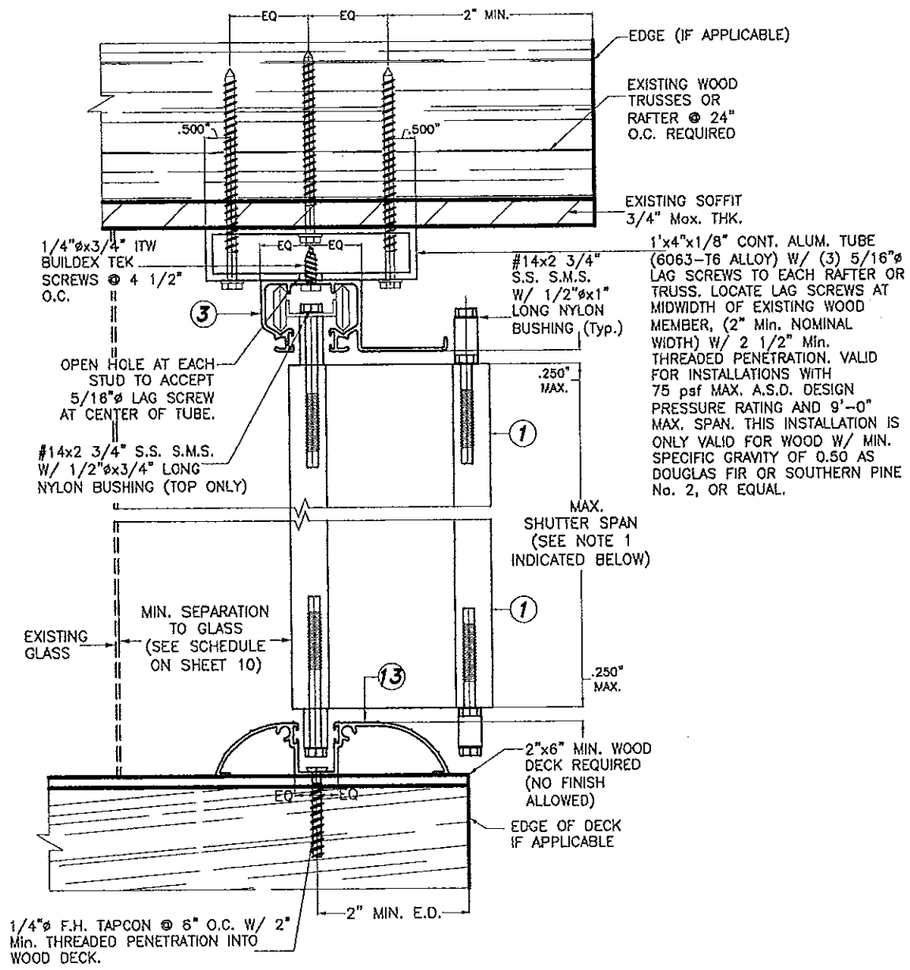

CEILING & FLOOR MOUNTING INSTALLATION SECTION CW

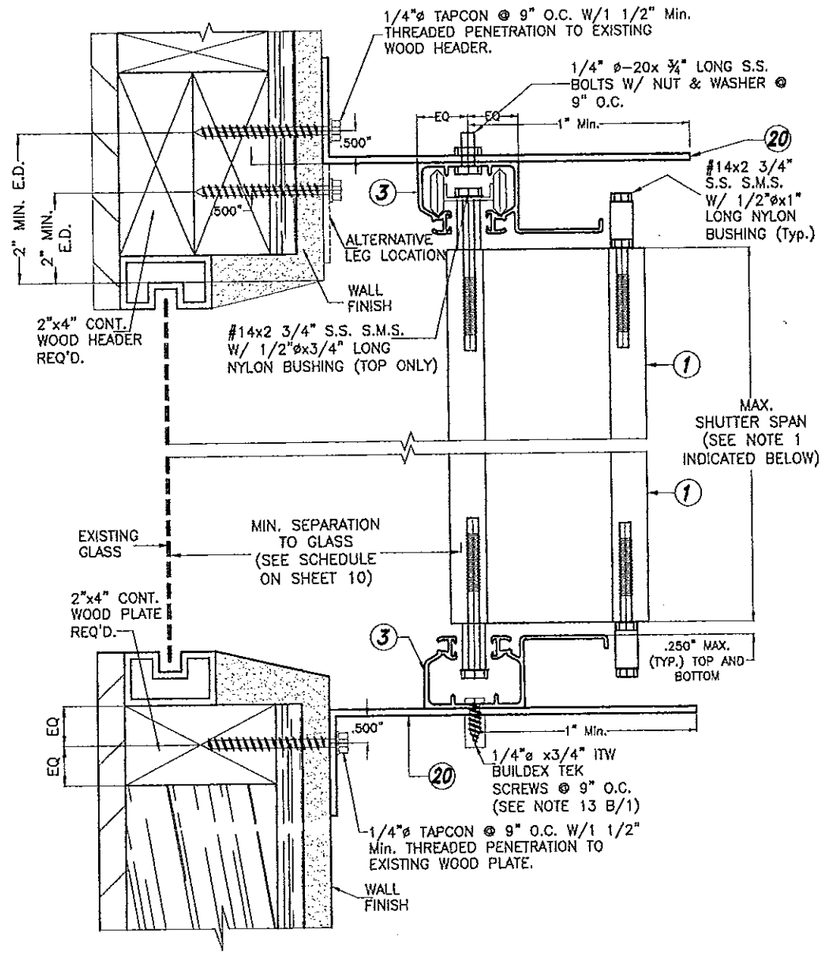

WALL MOUNTING HEADER & SILL INSTALLATION SECTION DW

INSTALLATION DETAILS ON EXISTING WOOD BUILDINGS FOR MID-PRESSURE BLADE.

SCALE : 3/8" = 1"

PRODUCT REVISED
as complying with the Florida Building Code
Acceptance No 13-0117.03
Expiration Date 12/04/2013
By
Miami Dade Product Control

NOTE FOR COMBINATION OF SECTIONS:

MOUNTING SECTIONS CAN BE COMBINED IN ANY WAY TO SUIT ANY INSTALLATION.

NOTES:

1. INSTALLATIONS ARE ONLY VALID FOR BUILDINGS WITH A.S.D. DESIGN PRESSURE RATING UP TO 80 p.s.f. AND 9'-0" Max. SHUTTER SPAN.
2. FOR NEW WOOD FRAME CONSTRUCTION: WOOD MEMBERS TO BE SOUTHERN PINE No. 2, W/ SPECIFIC DENSITY OF 0.55 OR EQUAL.

WALTER A. TILLIT JR. LICENSE No. 44167 STATE OF FLORIDA PROFESSIONAL ENGINEER

P.E. SEAL/SIGNATURE/DATE

FLORIDA BUILDING CODE (High Velocity Hurricane Zone)

©2012 TILTECO INC.

TILTECO INC.
TILLIT TESTING & ENGINEERING COMPANY
6355 N.W. 36th. St., Ste. 305, VIRGINIA GARDENS, FLORIDA 33166
Phone : (305)871-1530 . Fax : (305)871-1531
EB-0006719
WALTER A. TILLIT Jr., P.E.
FLORIDA Lic. # 44167

MID-PRESSURE AND HI-PRESSURE BLADES ACCORDION SHUTTER SYSTEM

B & C METALS ENTERPRISE
8430 NW 72 STREET
MIAMI, FLORIDA 33166
PHONE:(305) 406-0944 / FAX:(305) 406-0946

REV. NO	DESCRIPTION	DATE	REV. No	DESCRIPTION	DATE
1	OLD 07-501	12/21/12	3	--	--
2	--	--	4	--	--

DRAWN BY: A.G.
12/21/12 DATE
12-177 DRAWING No
SHEET 8 OF 15

END INSTALLATION DETAILS FOR MID-PRESSURE BLADE INTO 2"x4" MIN. WOOD STUDS

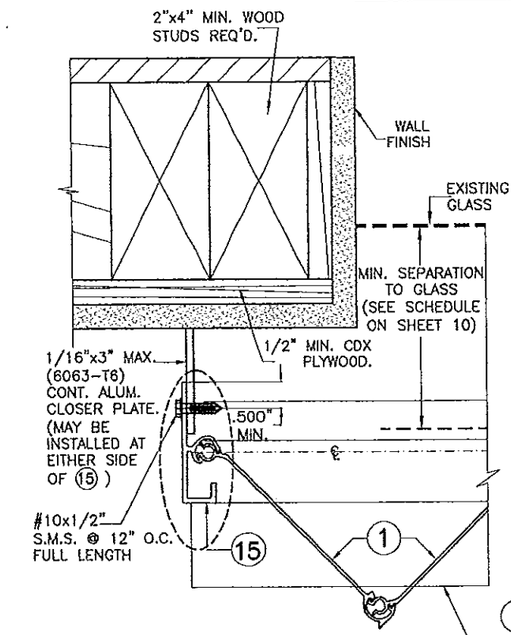

END CONECTION DETAIL (1)
SCALE : 3/8" = 1"

(7) OR (13)
(3) + (20) OR (11) + (12)
(11) + (12) + (20)

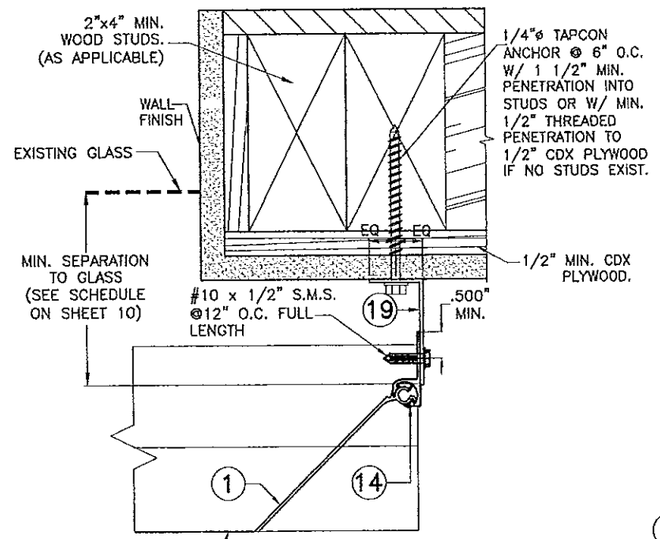

END CONECTION DETAIL (2)
SCALE : 3/8" = 1"

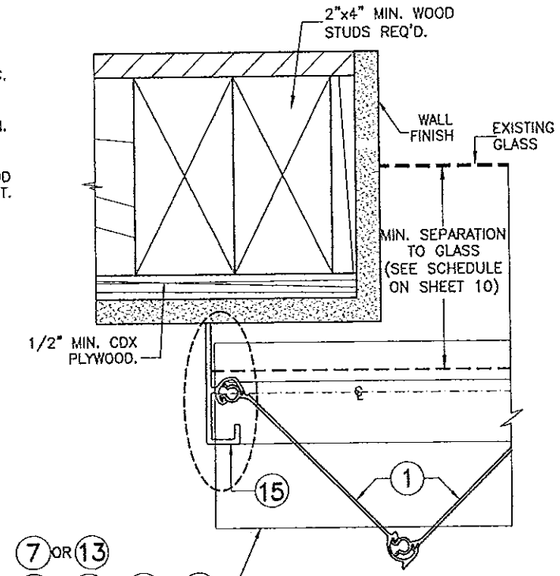

(7) OR (13)
(3) + (20) OR (11) + (12)
(11) + (12) + (20)

END CONECTION DETAIL (3)
SCALE : 3/8" = 1"

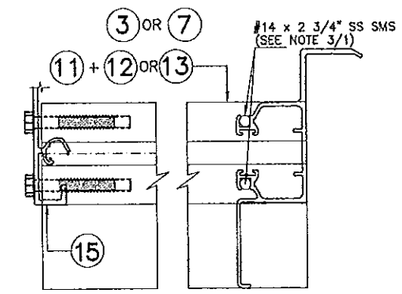

PLAN VIEW Y

DETAIL (Z)
SCALE : 3/8" = 1"

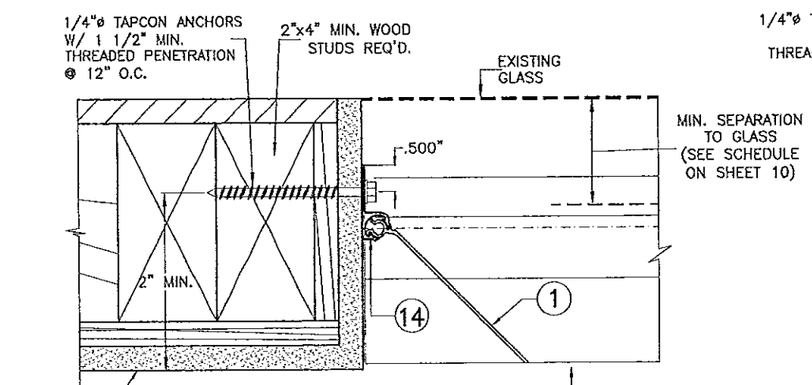

END CONECTION DETAIL (4)
SCALE : 3/8" = 1"

(7) OR (13)
(3) + (20) OR (11) + (12)
(11) + (12) + (20)

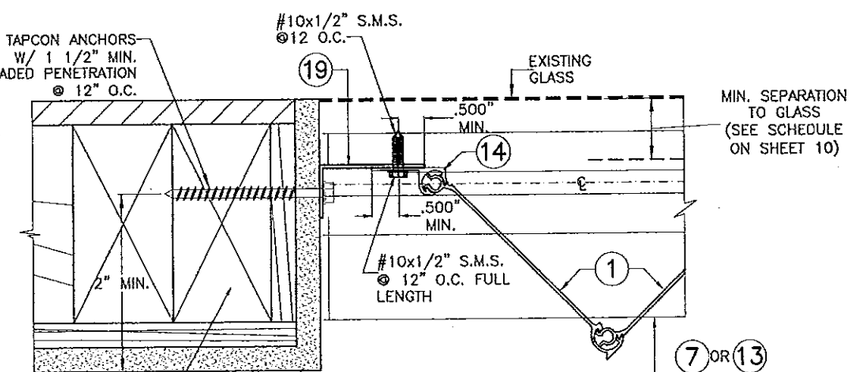

END CONECTION DETAIL (5)
SCALE : 3/8" = 1"

(7) OR (13)
(3) + (20) OR (11) + (12)
(11) + (12) + (20)

PRODUCT REVISED
as complying with the Florida Building Code
Acceptance No 13-0117.03
Expiration Date 12/04/2013
By
Miami Dade Product Control

WALTER A. TILLIT JR. LICENSE No. 44167 STATE OF FLORIDA PROFESSIONAL ENGINEER
P.E. SEAL/SIGNATURE/DATE

FLORIDA BUILDING CODE (High Velocity Hurricane Zone)

©2012 TILTECO INC.

TILTECO INC.
TILLIT TESTING & ENGINEERING COMPANY
8355 N.W. 36th. St., Ste. 305, VIRGINIA GARDENS, FLORIDA 33166
Phone : (305)871-1530 . Fax : (305)871-1531
EB-0006719
WALTER A. TILLIT Jr., P.E.
FLORIDA Lic. # 44167

MID-PRESSURE AND HI-PRESSURE BLADES ACCORDION SHUTTER SYSTEM

B & C METALS ENTERPRISE
8430 NW 72 STREET
MIAMI, FLORIDA 33166
PHONE:(305) 406-0944 / FAX:(305) 406-0946

REV. NO	DESCRIPTION	DATE	REV. No	DESCRIPTION	DATE
1	OLD 07-301	12/21/12	3	--	--
2	--	--	4	--	--

DRAWN BY: A.G.
12/21/12 DATE
12-177 DRAWING No
SHEET 9 OF 15

MAXIMUM A.S.D. DESIGN PRESSURE RATING (p.s.f.) AND CORRESPONDING MAXIMUM SPAN SCHEDULE.

(VALID FOR SECTIONS A, B, C, D & E ON SHEETS 3 & 4).

MAXIMUM A.S.D. DESIGN PRESSURE RATING (p.s.f.) AND CORRESPONDING MAXIMUM SPAN "L" SCHEDULE.

MAXIMUM A.S.D. DESIGN PRESSURE RATING (p.s.f.)	MAXIMUM SHUTTER SPAN FOR ALL SECTIONS Ó		MINIMUM SEPARATION TO GLASS (in.) ALL SECTIONS
	L+ (ft.)	L- (ft.)	
40	12'-1"	14'-11"	3"
45	11'-10"	14'-1"	3"
50	11'-6"	13'-4"	3"
55	11'-3"	12'-9"	3"
60	11'-0"	12'-2"	3"
65	10'-9"	11'-8"	3"
70	10'-7"	11'-3"	3"
75	10'-5"	10'-11"	3"
80	10'-3"	10'-7"	3"
85	10'-1"	10'-3"	3"
90	9'-11"	9'-11"	3"
95	9'-8"	9'-8"	3"
100	9'-5"	9'-5"	2 7/8"
105	9'-3"	9'-3"	2 3/4"
110	9'-0"	9'-0"	2 3/4"
115	8'-2"	8'-7"	2 1/2"
120	7'-5"	8'-3"	2 1/4"
125	6'-4"	7'-11"	2 1/8"
130	5'-0"	7'-7"	2 1/8"
135	----	7'-4"	2 1/8"
140	----	7'-1"	2 1/8"
145	----	6-9"	2 1/8"
150	----	6'-5"	2 1/8"
155	----	6'-0"	2 1/8"
160	----	5'-8"	2 1/8"
165	----	5'-4"	2 1/8"
170	----	5'-0"	2 1/8"
175	----	4'-11"	2 1/8"
180	----	4'-9"	2 1/8"
185	----	4-8"	2 1/8"
190	----	4'-6"	2 1/8"
195	----	4'-5"	2 1/8"

Ó NOTES:

(1) L+: MAXIMUM ALLOWABLE SHUTTER SPAN FOR A GIVEN POSITIVE A.S.D DESIGN PRESSURE RATING.
L-: MAX. ALLOWABLE SHUTTER SPAN FOR A GIVEN NEGATIVE A.S.D. DESIGN PRESSURE RATING.

(2) PROCEDURE TO DETERMINE MAXIMUM SHUTTER SPAN FOR WALL MOUNTINGS OR FLOOR/CEILING:

GIVEN A POSITIVE A.S.D. DESIGN PRESSURE RATING, DETERMINE MAXIMUM SHUTTER SPAN "L+" FROM SCHEDULE.
GIVEN A NEGATIVE A.S.D. DESIGN PRESSURE RATING, DETERMINE MAXIMUM SHUTTER SPAN "L-" FROM SCHEDULE.

FINAL MAXIMUM ALLOWABLE SHUTTER SPAN IS EQUAL TO THE MINIMUM DETERMINED SHUTTER SPAN BETWEEN "L+" AND "L-".

MAXIMUM A.S.D. DESIGN PRESSURE RATING (p.s.f.) AND CORRESPONDING MAXIMUM ANCHOR SPACING (in.) SCHEDULE. +

MAX. ANCHOR SPACING VS MAX. SHUTTER SPAN
* APPLICABLE FOR MAX. SHUTTER SPAN 9'-4"
** APPLICABLE FOR MAX. SHUTTER SPAN 7'-9"
*** APPLICABLE FOR MAX. SHUTTER SPAN 7'-6"

MAXIMUM A.S.D. DESIGN PRESSURE RATING (p.s.f.)	VALID FOR SECTION A						VALID FOR SECTION B			VALID FOR SECTION C			VALID FOR SECTION D						VALID FOR SECTION E					
	WALL MOUNTING INSTALLATION AT TOP OR BOTTOM (TO CONCRETE)			WALL MOUNTING INSTALLATION AT TOP OR BOTTOM (TO MASONRY)			FLOOR/CEILING MOUNTING INSTALLATION TOP OR BOTTOM (TO CONCRETE)			FLOOR/CEILING MOUNTING INSTALLATION TOP OR BOTTOM (TO CONCRETE)			BUILD-OUT MOUNTING INSTALLATION AT TOP OR BOTTOM (TO CONCRETE)			BUILD-OUT MOUNTING INSTALLATION AT TOP OR BOTTOM (TO MASONRY)			BUILD-OUT MOUNTING INSTALLATION AT TOP OR BOTTOM (TO CONCRETE)			BUILD-OUT MOUNTING INSTALLATION AT TOP OR BOTTOM (TO MASONRY)		
	NOTE 1	NOTE 2	NOTE 3	NOTE 1	NOTE 2	NOTE 3	NOTE 1	NOTE 2	NOTE 3	NOTE 1	NOTE 2	NOTE 3	NOTE 1	NOTE 2	NOTE 3	NOTE 1	NOTE 2	NOTE 3	NOTE 1	NOTE 2	NOTE 3	NOTE 1	NOTE 2	NOTE 3
40 OR LESS	9"	9"	9"	9"	9"	7 1/2"	6"	6"	6"	6"	6"	6"	9"	9"	9"	9"	9"	7 1/2"	9"	9"	9"	9"	9"	5 1/2"
	9"	9"	9"	9"	9"	9"	6"	6"	6"	6"	6"	6"	9"	9"	9"	9"	9"	9"	9"	9"	9"	9"	9"	8"
	–	–	–	–	–	–	6"	6"	6"	6"	6"	6"	–	–	–	–	–	–	–	–	–	–	–	–
FROM < 40 TO 62	9"	9"	9"	9"	8"	6"	6"	6"	5 1/2"	6"	6"	6"	9"	9"	9"	9"	8"	5 1/2"	9"	9"	9"	9"	7"	3 1/2"
	9"	9"	9"	9"	9"	8"	6"	6"	6"	6"	6"	6"	9"	9"	9"	9"	9"	7 1/2"	9"	9"	9"	9"	9"	4 1/2"
	–	–	–	–	–	–	6"	6"	5"	6"	6"	6"	–	–	–	–	–	–	–	–	–	–	–	–
FROM > 62 TO 72	9"	9"	9"	9"	7"	4"	6"	6"	5"	6"	6"	6"	9"	9"	9"	9"	7"	4 1/2"	9"	9"	9"	9"	4 1/2"	3"
	9"	9"	9"	9"	9"	5 1/2"	6"	6"	6"	6"	6"	6"	9"	9"	9"	9"	9"	6 1/2"	9"	9"	9"	9"	6 1/2"	4"
	–	–	–	–	–	–	6"	6"	4 1/2"	6"	6"	6"	–	–	–	–	–	–	–	–	–	–	–	–
FROM > 72 TO 92	9"	9"	7 1/2"	9"	3 1/2"	3"*	6"	5"	4 1/2"	6"	6"	5 1/2"	9"	9"	9"	9"	4 1/2"	3 1/2"	9"	9"	7 1/2"	9"	3"	–
	9"	9"	9"	9"	4 1/2"	4"*	6"	6"	6"	6"	6"	6"	9"	9"	9"	9"	6"	5"	9"	9"	9"	9"	4"	3 3/4"*
	–	–	–	–	–	–	6"	6"	4"	6"	6"	6"	–	–	–	–	–	–	–	–	–	–	–	–
FROM > 92 TO 110	9"	5"	4"	8 1/2"	3"**	–	6"	4"	4"	6"	5"	4 1/2"	9"	9"	8 1/2"	8 1/2"	3"	3"*	9"	6 1/2"	6"	7"	3"***	–
	9"	7"	5 1/2"	9"	4"**	–	6"	6"	6"	6"	6"	6"	9"	9"	9"	9"	4"	3 3/4"	9"	9"	8"	9"	3 3/4"**	–
	–	–	–	–	–	–	6"	4"	3 1/2	6"	6"	6"	–	–	–	–	–	–	–	–	–	–	–	–
FROM > 110 TO 170	9"	5"	–	3"	3"**	–	5"	4"	–	6"	4 1/2"	–	9"	8 1/2"	–	4"	3"	–	8 1/2"	6"	–	–	–	–
	9"	7"	–	4"	4"**	–	6"	6"	–	6"	6"	–	9"	9"	–	5 1/2"	3 3/4"	–	9"	8"	–	3 3/4"	3 3/4"**	–
	–	–	–	–	–	–	4 1/2"	3 1/2"	–	6"	6"	–	–	–	–	–	–	–	–	–	–	–	–	–
FROM > 170 TO 195	8"	–	–	3"	–	–	4 1/2"	–	–	5 1/2"	–	–	9"	–	–	4"	–	–	8"	–	–	–	–	–
	9"	–	–	4"	–	–	6"	–	–	6"	–	–	9"	–	–	5 1/2"	–	–	9"	–	–	3 3/4"	–	–
	–	–	–	–	–	–	4"	–	–	6"	–	–	–	–	–	–	–	–	–	–	–	–	–	–

+ MINIMUM ANCHOR SPACINGS LISTED BELOW ARE AS PER MIN. EDGE DISTANCE SCHEDULE. FOR E.D. LESS THAN SCHEDULE INDICATED, REDUCE ANCHOR SPACING BY MULTIPLYING SPACING SHOWN ON SCHEDULE BY THE FOLLOWING FACTORS. FOR THIS OPERATION TO BE POSSIBLE, REDUCED SPACING OBTAINED USING FACTOR SHALL NOT BE LESS THAN MINIMUM SPACING INDICATED FOR EACH ANCHOR TYPE AT ANCHORS LEGEND.

ACTUAL E.D.	FACTOR		
	1/4"ø TAPCON	5/16"ø TAPCON XL	1/4"ø CALK-IN
	MIN. SPACING=3"	MIN. SPACING=3.75"	MIN. SPACING=2.50"
1.50"	.35	.35	–
2.00"	–	.50	–
2.50"	–	.89	.50
2.688"	–	.96	–
3.00"	1.00	.96	.63
3.625"	–	1.00	–

ANCHORS LEGEND

ANCHORS TYPE	MINIMUM ANCHOR SPACING	MINIMUM EDGE DISTANCE	
		CONCRETE	C. BLOCK
1/4"ø TAPCON 3192 psi. (MIN.) CONCRETE	3.00"	3.00"	3.00"
5/16"ø TAPCON XL 2899 psi. (MIN.) CONCRETE	3.75"	3.625"	4.50"
1/4"ø CALK-IN 3000 psi. (MIN.) CONCRETE	2.50"	3.50"	–

1/4"ø TAPCON
5/16"ø TAPCON XL
1/4"ø CALK-IN

ANCHOR SPACING LEGEND

(1) Max. ANCHOR SPCG. VALID FOR SPANS OF 5'-0" OR LESS.
(2) Max. ANCHOR SPCG. VALID FOR SPANS GREATER THAN 5'-0" TO 9'-0".
(3) Max. ANCHOR SPCG. VALID FOR SPANS GREATER THAN 9'-0" TO MAX. ALLOWED.

PRODUCT REVISED
as complying with the Florida Building Code
Acceptance No 13-0117.03
Expiration Date 12/04/2013
By
Miami Dade Product Control

① MID-PRESSURE BLADE

WALTER A. TILLIT JR. LICENSE No. 44167 STATE OF FLORIDA PROFESSIONAL ENGINEER

P.E. SEAL/SIGNATURE/DATE

©2012 TILTECO INC.

TILTECO INC.
TILLIT TESTING & ENGINEERING COMPANY
6355 N.W. 36th. St. Ste. 305, VIRGINIA GARDENS, FLORIDA 33166
Phone : (305)871-1530 . Fax : (305)871-1531
EB-0006719
WALTER A. TILLIT Jr., P.E.
FLORIDA Lic. # 44167

FLORIDA BUILDING CODE (High Velocity Hurricane Zone)

MID-PRESSURE AND HI-PRESSURE BLADES ACCORDION SHUTTER SYSTEM

B & C METALS ENTERPRISE
8430 NW 72 STREET
MIAMI, FLORIDA 33166
PHONE:(305) 406-0944 / FAX:(305) 406-0946

REV. NO	DESCRIPTION	DATE	REV. No	DESCRIPTION	DATE
1	OLD 07-301	12/21/12	3	--	--
2	–	–	4	–	–

DRAWN BY: A.G.
12/21/12 DATE
12-177 DRAWING No
SHEET 10 OF 15

♦ NOTES ON LOCK (23) & LOCKING RODS (16)

1. ON LOCK (23) SHALL ALWAYS BE USED AT SHUTTER'S MIDSPAN AT ALL INSTALLATIONS. LOCK MAY BE INSTALLED INSIDE/OUTSIDE ATTACHED TO (9) W/ (3) #8 x 3/8" FLAT HEAD S.S. M.S., AND INCLUDES REINFORCEMENT INSERT (10) (SEE SHEETS 13 & 14). LOCATION OF LOCK SHALL BE AS SHOWN ON TYPICAL SHUTTER ELEVATION.

2. (2) LOCKING RODS (16) SHALL ALWAYS BE USED TOP & BOTTOM AT SHUTTER'S CENTERMATES (9) + (10) AT ALL INSTALLATIONS. LOCKING RODS (16) SHALL BE SECURED W/ 1/4"-20 THUMBSCREW (18).

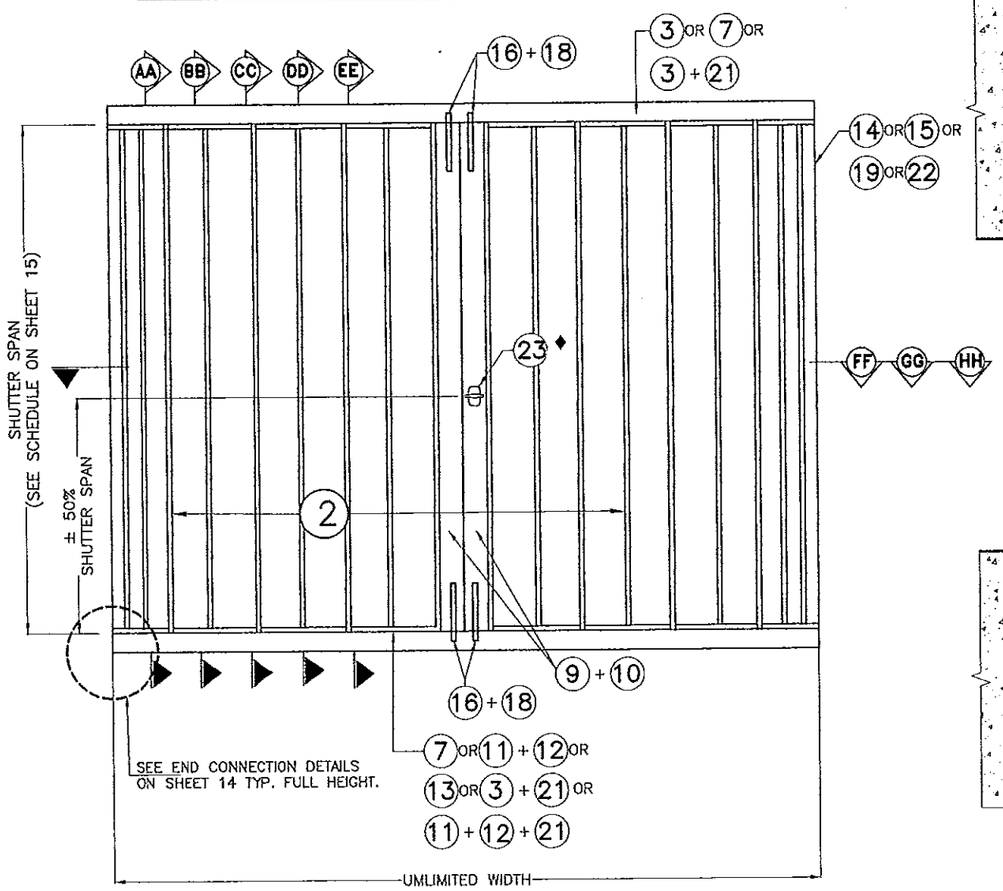

TYPICAL ELEVATION FOR HI-PRESSURE BLADE ♣

N. T. S.

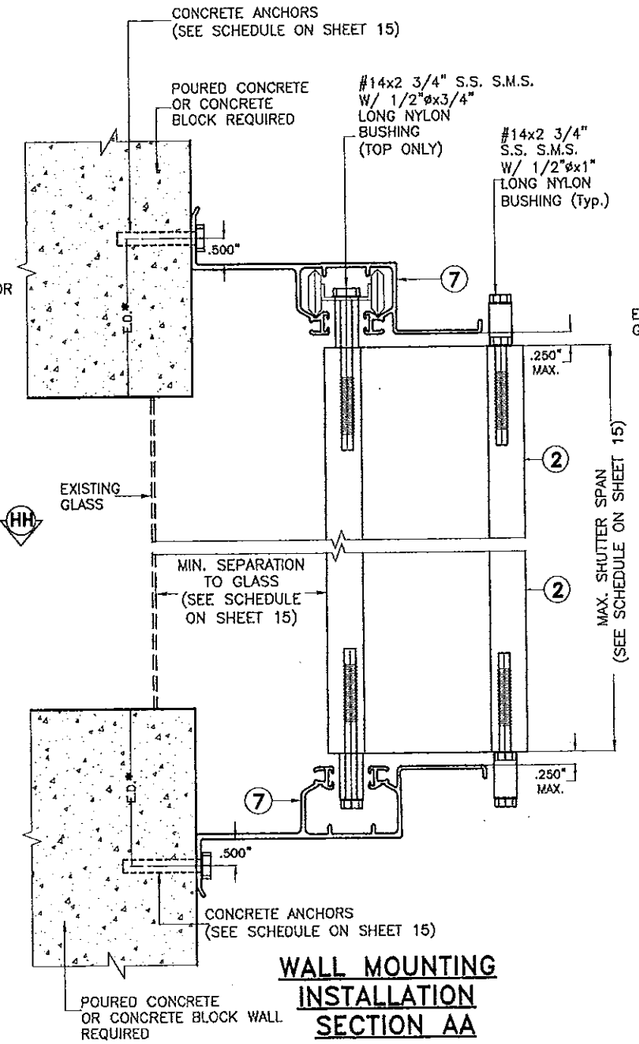

WALL MOUNTING INSTALLATION SECTION AA

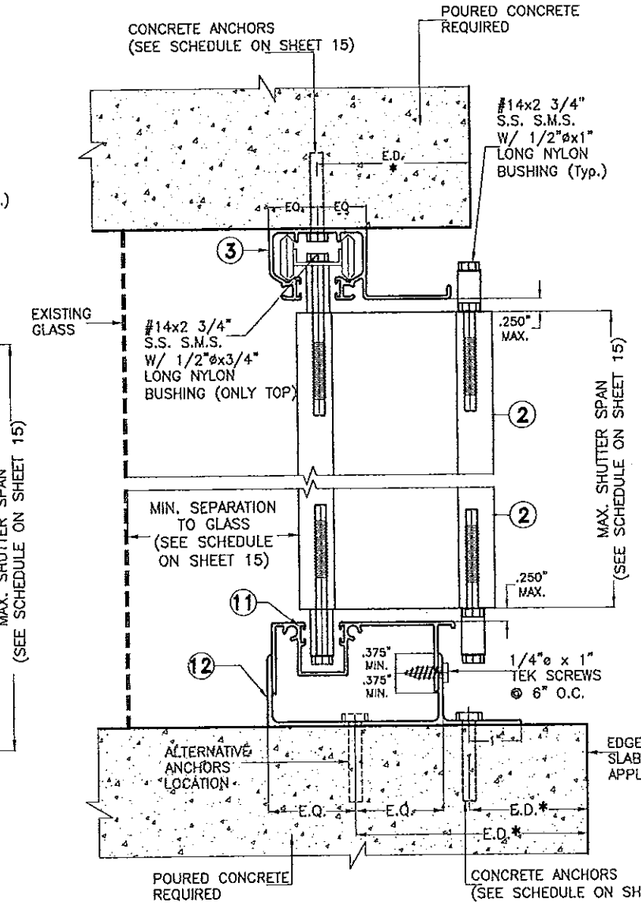

CEILING & FLOOR** MOUNTING INSTALLATION SECTION BB

INSTALLATIONS DETAILS FOR HI-PRESSURE BLADE

SCALE : 3/8" = 1"

PRODUCT REVISED
as complying with the Florida Building Code
Acceptance No 13-0117.03
Expiration Date 12/04/2013
By Helen A. Melo
Miami Dade Product Control

♣ NOTE:
SEE SECTIONS AA THRU EE ON SHEETS 11 & 12.

NOTE FOR COMBINATION OF SECTIONS:

1- MOUNTING SECTIONS CAN BE COMBINED IN ANY WAY TO SUIT ANY INSTALLATION.

* E.D. = EDGE DISTANCE (SEE SPECIFICATIONS ON SHEET 15)

** NOTE:

THIS INSTALLATION SHALL BE REMOVABLE WHEN PERFORMED ADJACENT TO AN OPERABLE EXIT OR ENTRANCE

WALTER A. TILLIT JR. LICENSE No. 44167 STATE OF FLORIDA PROFESSIONAL ENGINEER
SEAL / SIGNATURE / DATE

©2012 TILTECO INC.

TILTECO INC.
TILLIT TESTING & ENGINEERING COMPANY
8355 N.W. 36th St., Ste. 305, VIRGINIA GARDENS, FLORIDA 33166
Phone : (305)871-1530 . Fax : (305)871-1531
EB-0006719
WALTER A. TILLIT Jr., P.E.
FLORIDA Lic. # 44167

FLORIDA BUILDING CODE (High Velocity Hurricane Zone)

MID-PRESSURE AND HI-PRESSURE BLADES ACCORDION SHUTTER SYSTEM

B & C METALS ENTERPRISE
8430 NW 72 STREET
MIAMI, FLORIDA 33166
PHONE:(305) 406-0944 / FAX:(305) 406-0946

REV. NO	DESCRIPTION	DATE	REV. No	DESCRIPTION	DATE
1	OLD 07-301	12/21/12	3	-	-
2	-	-	4	-	-

DRAWN BY: A.G.

12/21/12 DATE

12--177 DRAWING No

SHEET 11 OF 15

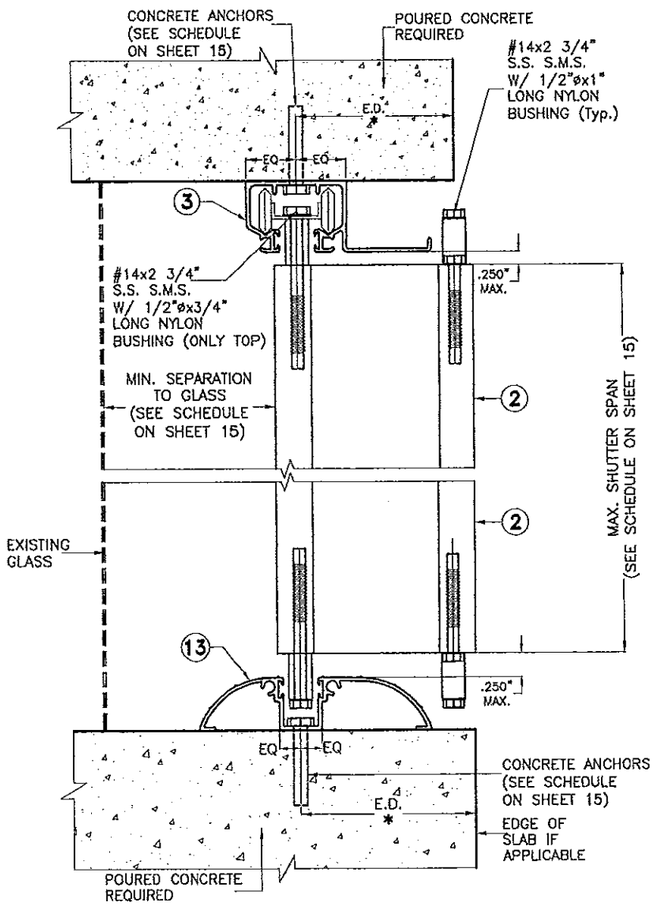

CEILING & FLOOR MOUNTING INSTALLATION SECTION CC

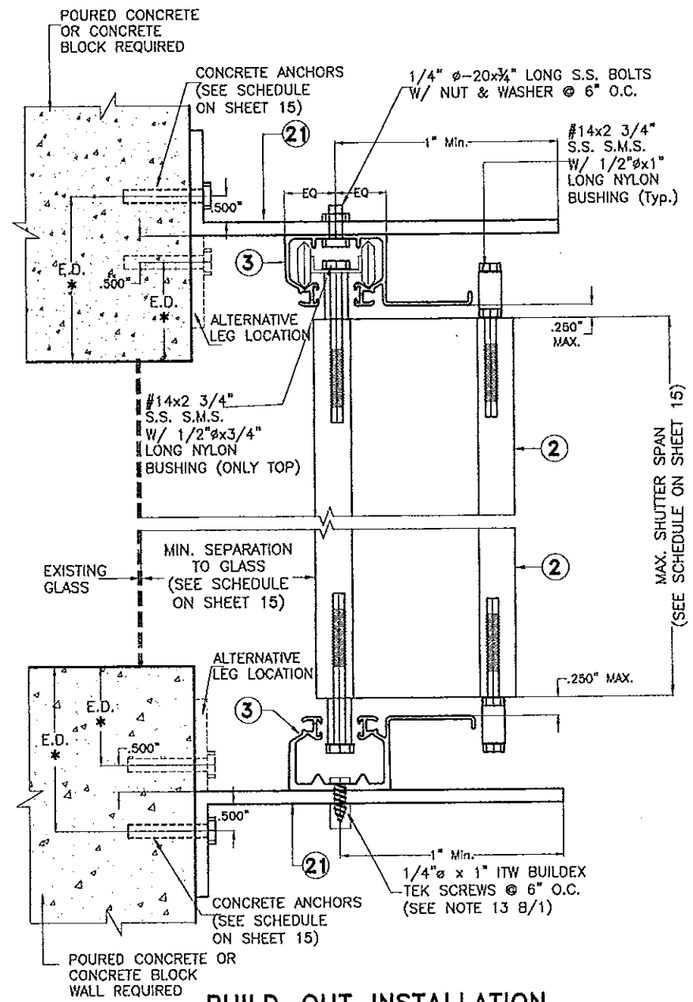

BUILD-OUT INSTALLATION HEADER & SILL SECTION DD

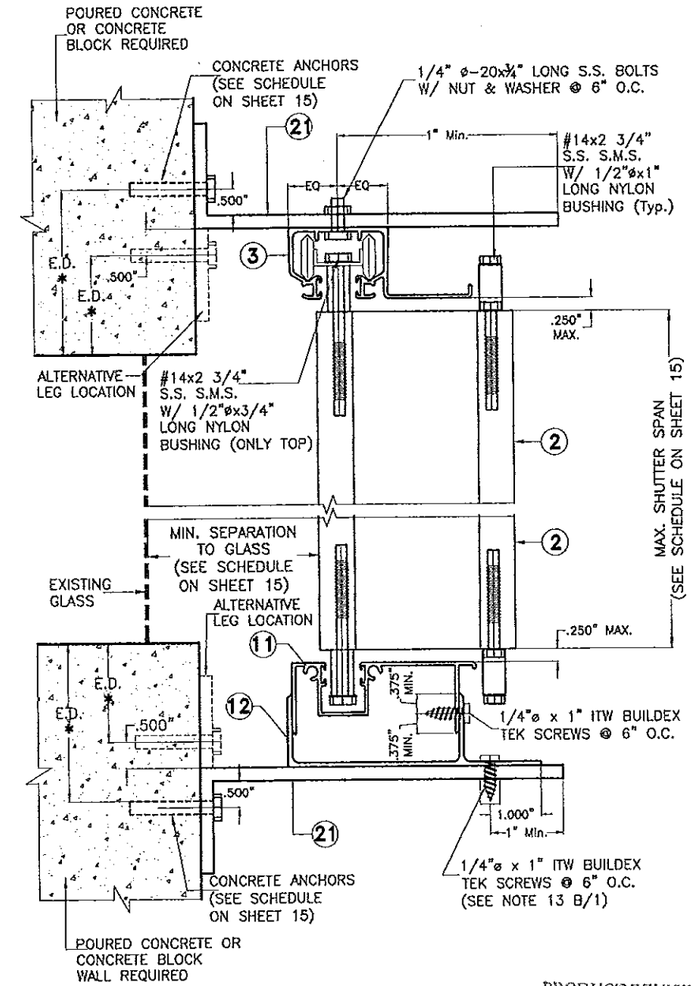

BUILD-OUT INSTALLATION HEADER & SILL SECTION EE

PRODUCT REVISED as complying with the Florida Building Code
Acceptance No 13-0117.03
Expiration Date 12/04/2013
By Helen A. Mehr
Miami Dade Product Control

INSTALLATIONS DETAILS FOR HI-PRESSURE BLADE

SCALE : 3/8" = 1"

FLORIDA BUILDING CODE (High Velocity Hurricane Zone)

NOTE FOR COMBINATION OF SECTIONS:

1- MOUNTING SECTIONS CAN BE COMBINED IN ANY WAY TO SUIT ANY INSTALLATION.

* E.D. = EDGE DISTANCE (SEE SPECIFICATIONS ON SHEET 15)

WALTER A. TILLIT JR. LICENSE No. 44167 STATE OF FLORIDA PROFESSIONAL ENGINEER

SEAL / SIGNATURE / DATE

©2012 TILTECO INC.

TILTECO INC.
TILLIT TESTING & ENGINEERING COMPANY
6355 N.W. 36th. St., Ste. 305, VIRGINIA GARDENS, FLORIDA 33166
Phone : (305)871-1530 . Fax : (305)871-1531
EB-0006719
WALTER A. TILLIT Jr., P.E.
FLORIDA Lic. # 44167

MID-PRESSURE AND HI-PRESSURE BLADES ACCORDION SHUTTER SYSTEM

B & C METALS ENTERPRISE
8430 NW 72 STREET
MIAMI, FLORIDA 33166
PHONE:(305) 406-0944 / FAX:(305) 406-0946

REV. NO	DESCRIPTION	DATE	REV. No	DESCRIPTION	DATE
1	OLD 07-301	12/21/12	3	–	–
2	–	–	4	–	–

DRAWN BY: A.G.
12/21/12 DATE
12-177 DRAWING No
SHEET 12 OF 15

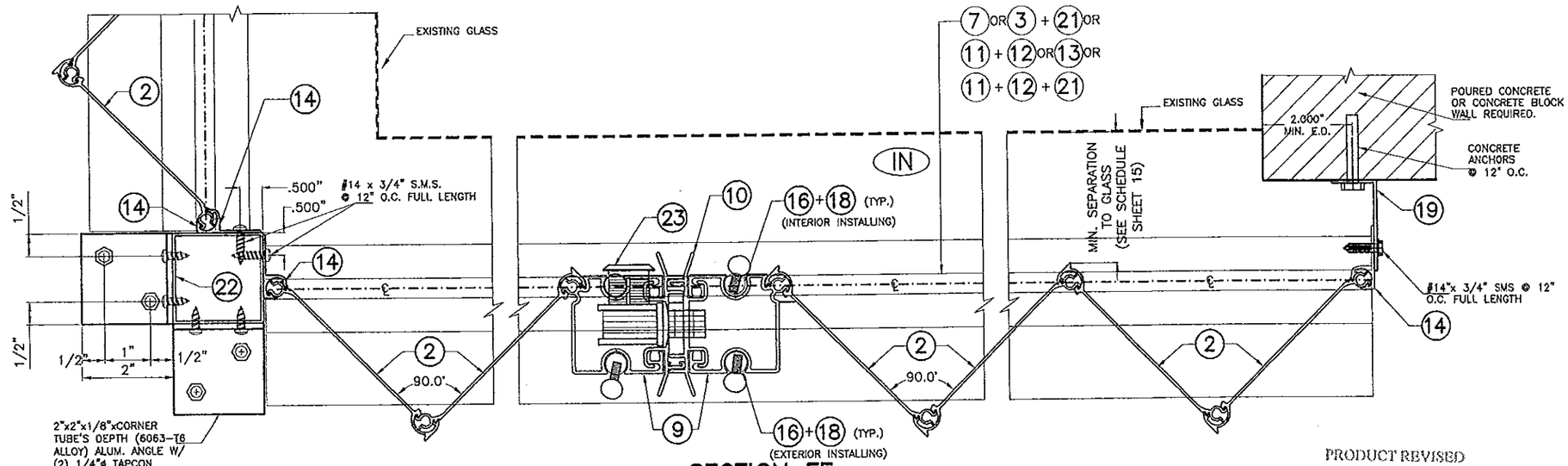

SECTION FF

END INSTALLATION DETAILS FOR HI-PRESSURE BLADE

SCALE : 3/8" = 1"

PRODUCT REVISED
as complying with the Florida Building Code
Acceptance No 13-0117.03
Expiration Date 12/04/2013
By Miami Dade Product Control

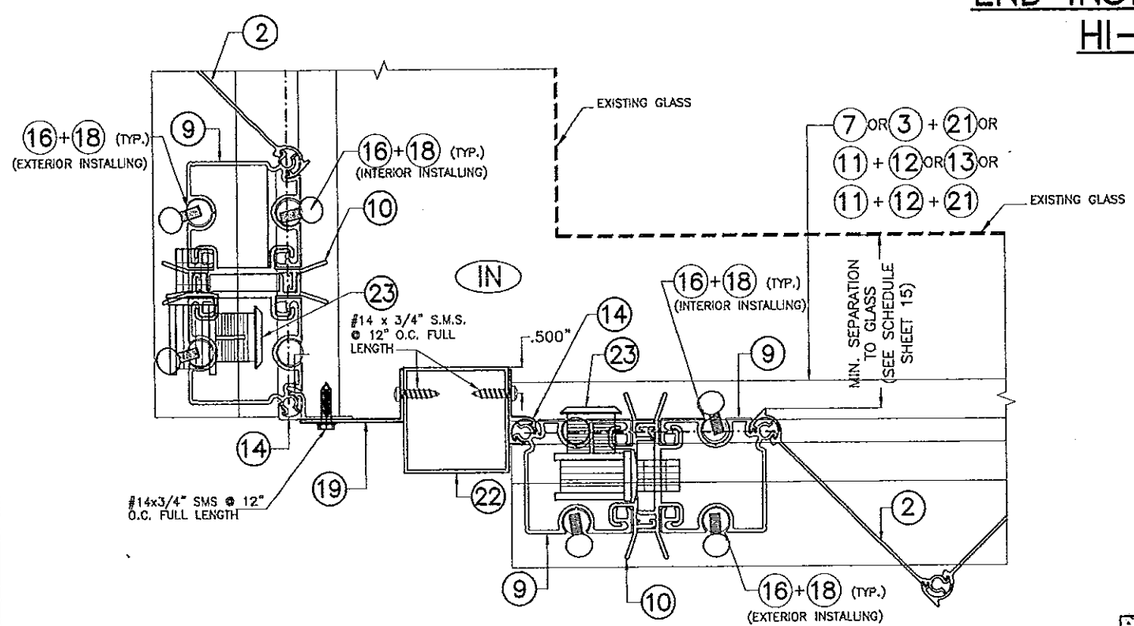

SECTION GG

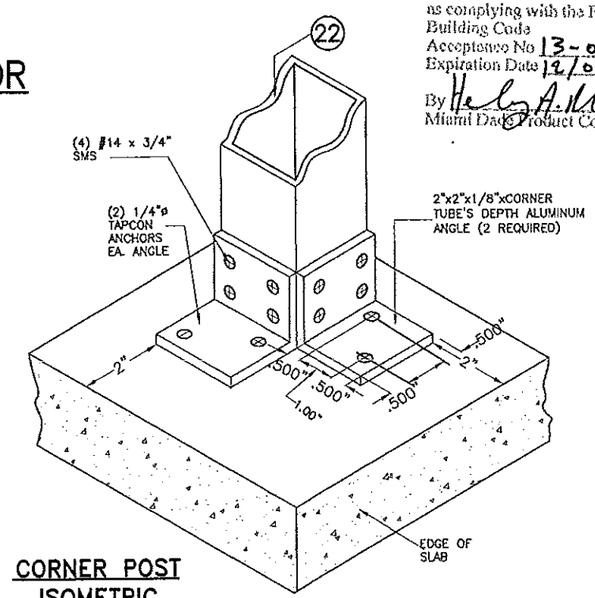

CORNER POST ISOMETRIC

(TYP. AT TOP AND BOTTOM SLABS)
N.T.S.

FLORIDA BUILDING CODE (High Velocity Hurricane Zone)

WALTER A. TILLIT JR. LICENSE No 44167 STATE OF FLORIDA PROFESSIONAL ENGINEER

P.E. SEAL/SIGNATURE/DATE

©2012 TILTECO INC.

TILTECO INC.
TILLIT TESTING & ENGINEERING COMPANY
8355 N.W. 36th. St., Ste. 305, VIRGINIA GARDENS, FLORIDA 33166
Phone : (305)871-1530 . Fax : (305)871-1531
EB-0006719
WALTER A. TILLIT Jr., P.E.
FLORIDA Lic. # 44167

MID-PRESSURE AND HI-PRESSURE BLADES ACCORDION SHUTTER SYSTEM

B & C METALS ENTERPRISE
8430 NW 72 STREET
MIAMI, FLORIDA 33166
PHONE:(305) 406-0944 / FAX:(305) 406-0946

REV. NO	DESCRIPTION	DATE	REV. No	DESCRIPTION	DATE
1	OLD 07-301	12/21/12	3	–	–
2	–	–	4	–	–

DRAWN BY: A.G.
12/21/12 DATE
12-177 DRAWING No
SHEET 13 OF 15

INSTALLATION FOR HI-PRESSURE BLADE INTO CONCRETE OR CONCRETE BLOCK WALL

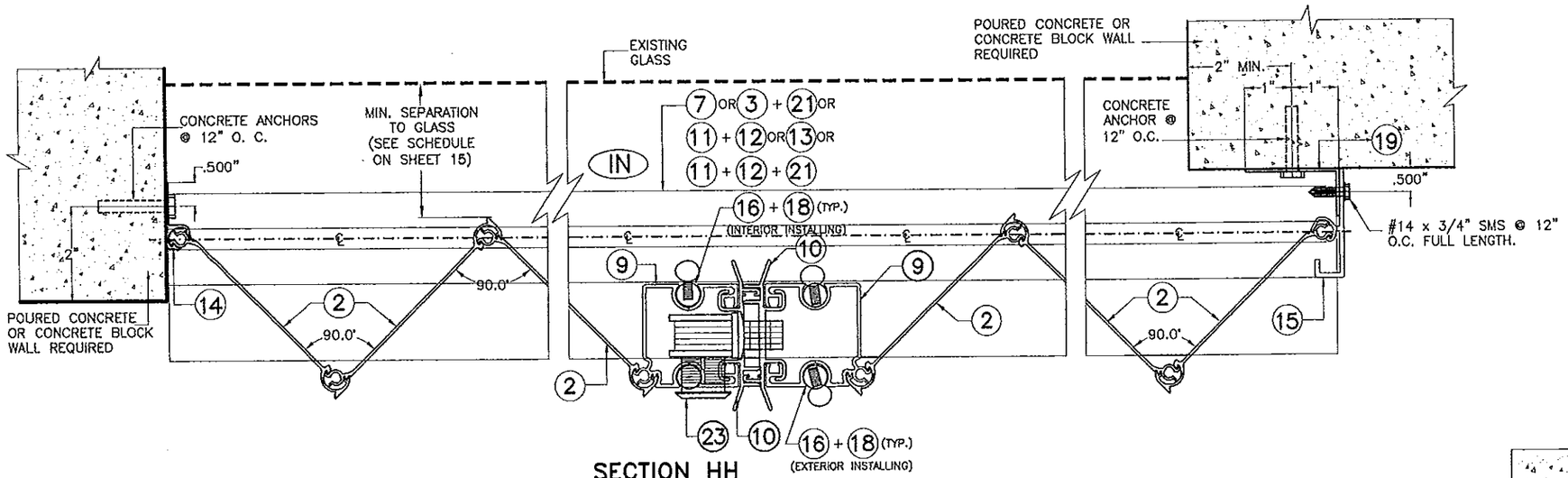

SECTION HH
SCALE : 3/8" = 1"

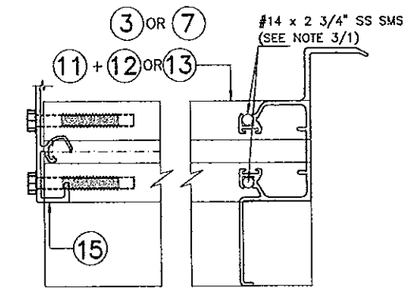

PLAN VIEW Y
DETAIL Z
SCALE : 3/8" = 1"

END INSTALLATION DETAILS FOR HI-PRESSURE BLADE

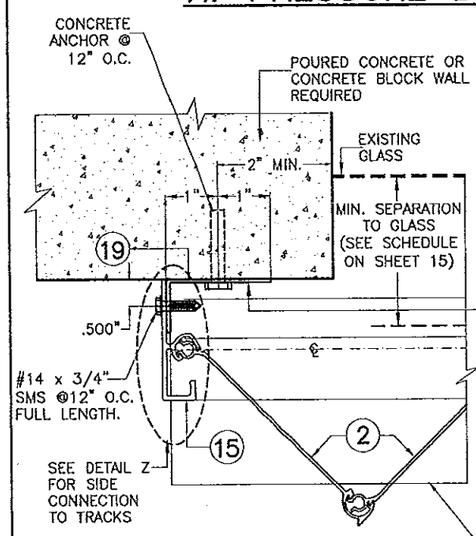

END CONECTION DETAIL 1
SCALE : 3/8" = 1"

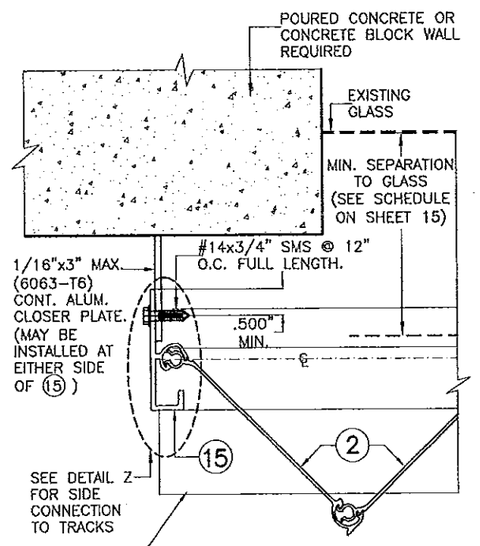

END CONECTION DETAIL 2
SCALE : 3/8" = 1"

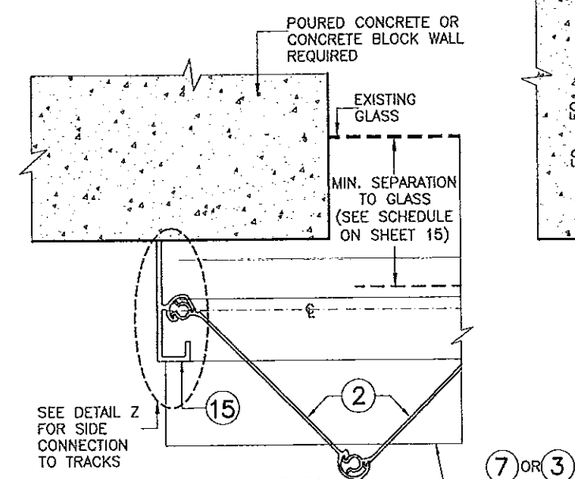

END CONECTION DETAIL 3
SCALE : 3/8" = 1"

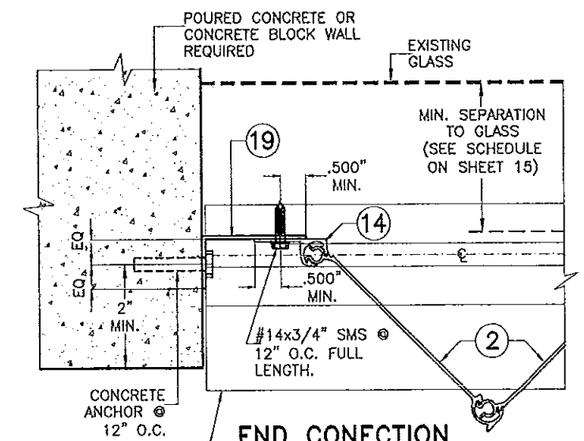

END CONECTION DETAIL 4
SCALE : 3/8" = 1"

7 OR 3 + 21 OR
11 + 12 OR 13 OR
11 + 12 + 21

PRODUCT REVISED
as complying with the Florida Building Code
Acceptance No 13-0117.03
Expiration Date 12/04/2013
By Miami Dade Product Control

FLORIDA BUILDING CODE (High Velocity Hurricane Zone)

WALTER A. TILLIT JR. LICENSE No. 44167 STATE OF FLORIDA PROFESSIONAL ENGINEER
SEAL / SIGNATURE / DATE

©2012 TILTECO INC.

TILTECO INC.
TILLIT TESTING & ENGINEERING COMPANY
8355 N.W. 36th. St., Ste. 305, VIRGINIA GARDENS, FLORIDA 33166
Phone : (305)871-1530 . Fax : (305)871-1531
EB-0006719
WALTER A. TILLIT Jr., P.E.
FLORIDA Lic. # 44167

MID-PRESSURE AND HI-PRESSURE BLADES ACCORDION SHUTTER SYSTEM

B & C METALS ENTERPRISE
8430 NW 72 STREET
MIAMI, FLORIDA 33166
PHONE:(305) 406-0944 / FAX:(305) 406-0946

REV. NO	DESCRIPTION	DATE	REV. No	DESCRIPTION	DATE
1	OLD 07-301	12/21/12	3	--	--
2	--	--	4	--	--

DRAWN BY: A.C.
DATE: 12/21/12
DRAWING No: 12-177
SHEET 14 OF 15

MAXIMUM A.S.D. DESIGN PRESSURE RATING (p.s.f.) AND CORRESPONDING MAXIMUM SPAN SCHEDULE.

(VALID FOR SECTIONS AA, BB, CC, DD & EE ON SHEETS 11 & 12).

MAX. ANCHOR SPACING VS MAX. SHUTTER SPAN

- * APPLICABLE FOR MAX. SHUTTER SPAN 8'-0"
- ** APPLICABLE FOR MAX. SHUTTER SPAN 5'-3"
- *** APPLICABLE FOR MAX. SHUTTER SPAN 9'-9"
- **** APPLICABLE FOR MAX. SHUTTER SPAN 12'-7"
- *****APPLICABLE FOR MAX. SHUTTER SPAN 10'-2"

MAXIMUM A.S.D. DESIGN PRESSURE RATING (p.s.f.) AND CORRESPONDING MAXIMUM SPAN "L" SCHEDULE.

MAXIMUM A.S.D. DESIGN PRESSURE RATING (p.s.f.)	MAXIMUM SHUTTER SPAN FOR ALL SECTIONS ϕ		MINIMUM SEPARATION TO GLASS (in.) ALL SECTIONS
	L+ (ft.)	L- (ft.)	
40	12'-2"	16'-0"	3"
45	11'-11"	15'-10"	3"
50	11'-7"	15'-4"	3"
55	11'-4"	14'-10"	3"
60	11'-1"	14'-5"	3"
65	10'-10"	14'-0"	3"
70	10'-8"	13'-7"	3"
75	10'-6"	13'-2"	3"
80	10'-4"	12'-6"	3"
85	10'-2"	12'-4"	3"
90	10'-0"	12'-0"	3"
95	9'-10"	11'-8"	3"
100	9'-6"	11'-5"	3"
105	9'-7"	11'-1"	3"
110	9'-6"	10'-10"	3"
115	9'-5"	10'-7"	3"
120	9'-4"	10'-5"	3"
125	9'-2"	10'-2"	3"
130	9'-0"	10'-0"	3"
135	----	9'-10"	2 7/8"
140	----	9'-7"	2 7/8"
145	----	9'-5"	2 7/8"
150	----	9'-4"	2 7/8"
155	----	9'-2"	2 7/8"
160	----	9'-0"	2 7/8"
165	----	8'-0"	2 7/8"
170	----	7'-0"	2 7/8"
175	----	6'-0"	2 7/8"
180	----	5'-0"	2 7/8"
185	----	4'-10"	2 7/8"
190	----	4'-9"	2 7/8"
195	----	4'-7"	2 7/8"

MAXIMUM A.S.D. DESIGN PRESSURE RATING (p.s.f.) AND CORRESPONDING MAXIMUM ANCHOR SPACING (in.) SCHEDULE. +

MAXIMUM A.S.D. DESIGN PRESSURE RATING (p.s.f.)	VALID FOR SECTION AA						VALID FOR SECTION BB			VALID FOR SECTION CC			VALID FOR SECTION DD						VALID FOR SECTION EE					
	WALL MOUNTING INSTALLATION AT TOP OR BOTTOM (TO CONCRETE)			WALL MOUNTING INSTALLATION AT TOP OR BOTTOM (TO MASONRY)			FLOOR/CEILING MOUNTING INSTALLATION TOP OR BOTTOM (TO CONCRETE)			FLOOR/CEILING MOUNTING INSTALLATION TOP OR BOTTOM (TO CONCRETE)			BUILD-OUT MOUNTING INSTALLATION AT TOP OR BOTTOM (TO CONCRETE)			BUILD-OUT MOUNTING INSTALLATION AT TOP OR BOTTOM (TO MASONRY)			BUILD-OUT MOUNTING INSTALLATION AT TOP OR BOTTOM (TO CONCRETE)			BUILD-OUT MOUNTING INSTALLATION AT TOP OR BOTTOM (TO MASONRY)		
	NOTE 1	NOTE 2	NOTE 3	NOTE 1	NOTE 2	NOTE 3	NOTE 1	NOTE 2	NOTE 3	NOTE 1	NOTE 2	NOTE 3	NOTE 1	NOTE 2	NOTE 3	NOTE 1	NOTE 2	NOTE 3	NOTE 1	NOTE 2	NOTE 3	NOTE 1	NOTE 2	NOTE 3
40 OR LESS	6"	6"	6"	6"	6"	6"	6"	6"	6"	6"	6"	6"	6"	6"	6"	6"	6"	6"	6"	6"	6"	6"	6"	6"
	6"	6"	6"	6"	6"	6"	6"	6"	6"	6"	6"	6"	6"	6"	6"	6"	6"	6"	6"	6"	6"	6"	6"	6"
	–	–	–	–	–	–	6"	6"	6"	6"	6"	6"	–	–	–	–	–	–	–	–	–	–	–	–
FROM < 40 TO 62	6"	6"	6"	6"	6"	3"	6"	6"	4 1/2"	6"	6"	5 1/2"	6"	6"	6"	6"	6"	5"	6"	6"	6"	6"	6"	5"
	6"	6"	6"	6"	6"	4"	6"	6"	6"	6"	6"	6"	6"	6"	6"	6"	6"	6"	6"	6"	6"	6"	6"	5"
	–	–	–	–	–	–	6"	6"	4"	6"	6"	6"	–	–	–	–	–	–	–	–	–	–	–	–
FROM > 62 TO 72	6"	6"	5"	6"	6"	3"****	6"	6"	4"	6"	6"	5"	6"	6"	6"	6"	6"	4 1/2"	6"	6"	6"	6"	6"	4 1/2"
	6"	6"	6"	6"	6"	4"****	6"	6"	6"	6"	6"	6"	6"	6"	6"	6"	6"	6"	6"	6"	6"	6"	6"	6"
	–	–	–	–	–	–	6"	6"	4"	6"	6"	6"	–	–	–	–	–	–	–	–	–	–	–	–
FROM > 72 TO 92	6"	6"	4"	6"	5"	3"***	6"	5"	3 1/2"	6"	6"	4 1/2"	6"	6"	6"	6"	5 1/2"	4"	6"	6"	6"	6"	5 1/2"	4"
	6"	6"	5"	6"	6"	4"***	6"	6"	6"	6"	6"	6"	6"	6"	6"	6"	6"	5 1/2"	6"	6"	6"	6"	6"	5 1/2"
	–	–	–	–	–	–	6"	4 1/2"	3 1/2"	6"	6"	6"	–	–	–	–	–	–	–	–	–	–	–	–
FROM > 92 TO 110	6"	5"	3 1/2"	6"	3 1/2"*	–	6"	4"	3 1/2"	6"	5"	4"	6"	6"	6"	6"	4 1/2"	3 1/2"	6"	6"	6"	6"	4 1/2"	3 1/2"
	6"	6"	4"	6"	4 1/2"*	–	6"	6"	5 1/2"	6"	6"	6"	6"	6"	6"	6"	6"	5"	6"	6"	6"	6"	6"	5"
	–	–	–	–	–	–	6"	3 1/2"	3"	6"	6"	5 1/2"	–	–	–	–	–	–	–	–	–	–	–	–
FROM > 110 TO 170	6"	3 1/2"	3"*****	4"	3"**	–	5"	3"	3"***	6"	3 1/2"	3 1/2"	6"	6"	6"	5 1/2"	3 1/2"	3"	6"	6"	6"	5 1/2"	3 1/2"	3"
	6"	4 1/2"	3 3/4"	4"	4"**	–	6"	5"	5"	6"	6"	6"	6"	6"	6"	6"	5"	4"	6"	6"	6"	6"	5"	4"
	–	–	–	–	–	–	4 1/2"	3"	2 1/2"	6"	5 1/2"	4 1/2"	–	–	–	–	–	–	–	–	–	–	–	–
FROM > 170 TO 195	6"	3 1/2"	–	3"	–	–	4 1/2"	3 1/2"	–	5 1/2"	5 1/2"	–	6"	6"	–	5"	3 1/2"	–	6"	6"	–	5"	3 1/2"	–
	6"	4 1/2"	–	4"	–	–	6"	5 1/2"	–	6"	6"	–	6"	6"	–	6"	5"	–	6"	6"	–	6"	5"	–
	–	–	–	–	–	–	4"	3"	–	6"	5 1/2"	–	–	–	–	–	–	–	–	–	–	–	–	–

PRODUCT REVISED
as complying with the Florida Building Code
Acceptance No 13-0117.03
Expiration Date 12/04/2013
By Miami Dade Product Control

+ MINIMUM ANCHOR SPACINGS LISTED BELOW ARE AS PER MIN. EDGE DISTANCE SCHEDULE. FOR E.D. LESS THAN SCHEDULE INDICATED, REDUCE ANCHOR SPACING BY MULTIPLYING SPACING SHOWN ON SCHEDULE BY THE FOLLOWING FACTORS. FOR THIS OPERATION TO BE POSSIBLE, REDUCED SPACING OBTAINED USING FACTOR SHALL NOT BE LESS THAN MINIMUM SPACING INDICATED FOR EACH ANCHOR TYPE AT ANCHORS LEGEND.

ACTUAL E.D.	FACTOR		
	1/4"ø TAPCON	5/16"ø TAPCON XL	1/4"ø CALK-IN
	MIN. SPACING=3"	MIN. SPACING=3.75"	MIN. SPACING=2.50"
1.50"	–	–	–
2.00"	–	–	–
2.50"	–	.89	.50
2.688"	–	.96	–
3.00"	1.00	.96	.63
3.625"	–	1.00	–

ANCHORS LEGEND

ANCHORS TYPE	MINIMUM ANCHOR SPACING	MINIMUM EDGE DISTANCE	
		CONCRETE	C. BLOCK
1/4"ø TAPCON 3192 psi. (MIN.) CONCRETE	3.00"	3.00"	3.00"
5/16"ø TAPCON XL 2899 psi. (MIN.) CONCRETE	3.75"	3.625"	4.50"
1/4"ø CALK-IN 3000 psi. (MIN.) CONCRETE	2.50"	3.50"	–

1/4"ø TAPCON
5/16"ø TAPCON XL
1/4"ø CALK-IN

ANCHOR SPACING LEGEND

(NOTE 1) Max. ANCHOR SPCG. VALID FOR SPANS OF 5'-0" OR LESS.

(NOTE 2) Max. ANCHOR SPCG. VALID FOR SPANS GREATER THAN 5'-0" TO 9'-0".

(NOTE 3) Max. ANCHOR SPCG. VALID FOR SPANS GREATER THAN 9'-0" TO MAX. ALLOWED.

ϕ NOTES:

(1) L+: MAXIMUM ALLOWABLE SHUTTER SPAN FOR A GIVEN POSITIVE A.S.D. DESIGN PRESSURE RATING.
L-: MAX. ALLOWABLE SHUTTER SPAN FOR A GIVEN NEGATIVE A.S.D. DESIGN PRESSURE RATING.

(2) PROCEDURE TO DETERMINE MAXIMUM SHUTTER SPAN FOR WALL MOUNTINGS OR FLOOR/CEILING:

GIVEN A POSITIVE A.S.D. DESIGN PRESSURE RATING, DETERMINE MAXIMUM SHUTTER SPAN "L+" FROM SCHEDULE.
GIVEN A NEGATIVE A.S.D. DESIGN PRESSURE RATING, DETERMINE MAXIMUM SHUTTER SPAN "L-" FROM SCHEDULE.

FINAL MAXIMUM ALLOWABLE SHUTTER SPAN IS EQUAL TO THE MINIMUM DETERMINED SHUTTER SPAN BETWEEN "L+" AND "L-".

② HI-PRESSURE BLADE

WALTER A. TILLIT JR. LICENSE No. 44167 STATE OF FLORIDA PROFESSIONAL ENGINEER

SEAL/SIGNATURE/DATE

FLORIDA BUILDING CODE (High Velocity Hurricane Zone)

©2012 TILTECO INC.

TILTECO INC.
TILLIT TESTING & ENGINEERING COMPANY
6355 N.W. 36th St. Ste. 303, VIRGINIA GARDENS, FLORIDA 33166
Phone : (305)871-1530 : Fax : (305)871-1531
EB-0006719
WALTER A. TILLIT Jr., P.E.
FLORIDA Lic. # 44167

MID-PRESSURE AND HI-PRESSURE BLADES ACCORDION SHUTTER SYSTEM

B & C METALS ENTERPRISE
8430 NW 72 STREET
MIAMI, FLORIDA 33166
PHONE:(305) 406-0944 / FAX:(305) 406-0946

REV. NO	DESCRIPTION	DATE	REV. No	DESCRIPTION	DATE
1	OLD 07-501	12/21/12	3	–	–
2	–	–	4	–	–

DRAWN BY: A.G.
12/21/12 DATE
12-177 DRAWING No
SHEET 15 OF 15