MIAMI-DADE COUNTY
DEPARTMENT OF REGULATORY AND ECONOMIC RESOURCES (RER)
BOARD AND CODE ADMINISTRATION DIVISION

MIAMI-DADE COUNTY
PRODUCT CONTROL SECTION
11805 SW 26 Street, Room 208
Miami, Florida 33175-2474
T (786) 315-2590 F (786) 315-2599
www.miamidade.gov/economy

NOTICE OF ACCEPTANCE (NOA)

Eurotec, Inc.
8315 NW 74th Street
Miami, Florida 33166

SCOPE:
This NOA is being issued under the applicable rules and regulations governing the use of construction materials. The documentation submitted has been reviewed and accepted by Miami-Dade County RER- Product Control Section to be used in Miami Dade County and other areas where allowed by the Authority Having Jurisdiction (AHJ).

This NOA shall not be valid after the expiration date stated below. The Miami-Dade County Product Control Section (In Miami Dade County) and/or the AHJ (in areas other than Miami Dade County) reserve the right to have this product or material tested for quality assurance purposes. If this product or material fails to perform in the accepted manner, the manufacturer will incur the expense of such testing and the AHJ may immediately revoke, modify, or suspend the use of such product or material within their jurisdiction. RER reserves the right to revoke this acceptance, if it is determined by Miami-Dade County Product Control Section that this product or material fails to meet the requirements of the applicable building code.

This product is approved as described herein, and has been designed to comply with the High Velocity Hurricane Zone of the Florida Building Code.

DESCRIPTION: **ASSA/60mm Bertha Roll-Up Shutter**

APPROVAL DOCUMENT: Drawing No. 12-178, titled "ASSA/ 60 mm Bertha Roll-Up", prepared by Tilteco, Inc., dated December 21, 2012, last revision #1 dated December 21, 2012, sheets 1 through 14 of 14 including 1A, 5A, & 5B, signed and sealed by Walter A. Tillit Jr., P.E., bearing the Miami-Dade County Product Control Revision stamp with the Notice of Acceptance number and expiration date by the Miami-Dade County Product Control Section.

MISSILE IMPACT RATING: **Large and Small Missile Impact Resistant**
LABELING: Each unit shall bear a permanent label with the manufacturer's name or logo, city, state, the following statement: "Miami-Dade County Product Control Approved or MDCPCA", and NOA number, per TAS-201, TAS-202, and TAS-203, unless otherwise noted herein.
RENEWAL of this NOA shall be considered after a renewal application has been filed and there has been no change in the applicable building code negatively affecting the performance of this product.
TERMINATION of this NOA will occur after the expiration date or if there has been a revision or change in the materials, use, and/or manufacture of the product or process. Misuse of this NOA as an endorsement of any product, for sales, advertising or any other purposes shall automatically terminate this NOA. Failure to comply with any section of this NOA shall be cause for termination and removal of NOA.
ADVERTISEMENT: The NOA number preceded by the words Miami-Dade County, Florida, and followed by the expiration date may be displayed in advertising literature. If any portion of the NOA is displayed, then it shall be done in its entirety.
INSPECTION: A copy of this entire NOA shall be provided to the user by the manufacturer or its distributors and shall be available for inspection at the job site at the request of the Building Official.

This NOA **revises NOA # 11-0607.04** and consists of this page 1, evidence pages E-1, E-2, & E-3 as well as approval document mentioned above.
The submitted documentation was reviewed by **Helmy A. Makar, P.E., M.S.**

MIAMI-DADE COUNTY APPROVED

Helmy A. Makar
03/28/2013

NOA No. 13-0117.04
Expiration Date: 07/06/2016
Approval Date: 03/28/2013

NOTICE OF ACCEPTANCE: EVIDENCE SUBMITTED

1. EVIDENCE SUBMITTED UNDER PREVIOUS APPROVAL # 05-1116.07

A. DRAWING

1. *Drawing No. 05-153, titled "ASSA/60 mm Bertha Roll-Up", Sheets 1 through 14 including 1A of 5A, prepared by Tilteco, Inc., dated 07/12/05, with last revision on 05/09/06, signed and sealed by Walter A.Tillit Jr., PE.*

B. TEST

1. *Test report on Large Missile Impact Test per PA 201, Cyclic Wind Pressure Test per PA 203 and Uniform Static Air Pressure Test per PA 202, of "Series: 60mm; Aluminum Roll Up Shutter", prepared by Fenestration Testing Laboratory, Inc., Report No. 2751, dated 08/24/2000, signed and sealed by A. Acevedo, PE.*
2. *Test report on Large Missile Impact Test per PA 201of "Aluminum Storm Bar", prepared by Fenestration Testing Laboratory, Inc., Report No. 2760, dated 08/31/2000, signed and sealed by A. Acevedo, PE.*

C. CALCULATIONS

1. *Comparative analysis for slats; storm bars, headers and anchors using rational analysis dated 09/14/00, pages 1 through 167 of 167, prepared by Tilteco Inc., signed and sealed by W. A. Tillit Jr., PE. on 04/06/01.*

D. QUALITY ASSURANCE

1. *Building Code Compliance Office.*

E. MATERIAL CERTIFICATION

1. *Tensile Test Report No. 13974.0001, per ASTM B 557, prepared by ATC Associates, Inc. dated 09/20/00, signed and sealed by S.E. black, PE.*

F. STATEMENTS

1. *Letter of Code Compliance issued by Tilteco, Inc., on 04/04/2001, signed and sealed by W. Tillit Jr., PE.*
2. *No-financial interest letter issued by Tilteco, Inc., on 04/04/2001, signed and sealed by W. Tillit Jr., PE.*
3. *Test compliance letter issued by Fenestration Testing Laboratory, Inc. on 04/30/2001, signed and sealed by A. Acevedo, PE.*
4. *Relinquishing test letter issued by Weather Guard, Inc. on 04/06/2001, signed by D. D. Thomas.*
5. *Advise of purchase letter issued by American Shutter Systems Association, Inc, on 04/09/2001, signed by W. Feeley.*
6. *Manufacturer's letter issued by Eurotec on 10/17/05 and signed by F. Castro.*
7. *Component release letter issued by ASSA Inc. on 06/03/05 and signed by L. Santana.*

Helmy A. Makar, P.E., M.S.
Product Control Unit Supervisor
NOA No. 13-0117.04
Expiration Date: 07/06/2016
Approval Date: 03/28/2013

NOTICE OF ACCEPTANCE: EVIDENCE SUBMITTED

2. EVIDENCE SUBMITTED UNDER PREVIOUS APPROVAL # 11-0607.04

A. DRAWINGS

1. *Drawing No. 11-056, titled "ASSA/ 60 mm Bertha Roll-Up", prepared by Tilteco, Inc., dated June 02, 2011, last revision #1 dated June 02, 2001, sheets 1 through 14 of 14 including 1A, 5A, & 5B, signed and sealed by Walter A. Tillit Jr., P.E.*

B. TESTS

1. *See Association's generic approval under 09-0687.*

C. CALCULATIONS

1. *See Association's generic approval under 09-0687.*

D. QUALITY ASSURANCE

1. *By Miami-Dade County Building and Neighborhood Compliance Department.*

E. MATERIAL CERTIFICATIONS

1. *See Association's generic approval under 09-0687.*

F. STATEMENTS

1. *Release letter issued by the American Shutter Systems Association, Inc., dated May 20, 2011, certifying this product to meet the criteria of product tested and approved, and allowing Eurotec, Inc., to use the test results approved under Miami-Dade County Approval No. 09-0687, signed by Ms. Legny Rodriguez.*
2. *Acknowledgment letter by Eurotec, Inc., dated May 20, 2011, signed by Mr. Francisco Castro.*
3. *Letter by Tilteco Inc., dated June 02, 2011, certifying that the drawing (No. 11-056) prepared for Eurotec, Inc., signed and sealed by Mr. Walter A. Tillit, Jr., P.E., is engineering wise identical to ASSA's generic drawing (No. 09-061).*

3. NEW EVIDENCE SUBMITTED

A. DRAWINGS

1. *Drawing No. 12-178, titled "ASSA/ 60 mm Bertha Roll-Up", prepared by Tilteco, Inc., dated December 21, 2012, last revision #1 dated December 21, 2012, sheets 1 through 14 of 14 including 1A, 5A, & 5B, signed and sealed by Walter A. Tillit Jr., P.E.*

Helmy A. Makar, P.E., M.S.
Product Control Unit Supervisor
NOA No. 13-0117.04
Expiration Date: 07/06/2016
Approval Date: 03/28/2013

NOTICE OF ACCEPTANCE: EVIDENCE SUBMITTED

B. TESTS

1. *See Association's generic approval under 12-0084.*

C. CALCULATIONS

1. *See Association's generic approval under 12-0084.*

D. QUALITY ASSURANCE

1. *By Miami-Dade County Department of Regulatory and Economic Resources.*

E. MATERIAL CERTIFICATIONS

1. *See Association's generic approval under 12-0084.*

F. STATEMENTS

1. *Release letter issued by the American Shutter Systems Association, Inc., dated December 20, 2012, certifying this product to meet the criteria of product tested and approved, and allowing Eurotec, Inc., to use the test results approved under Miami-Dade County Approval No. 12-0084, signed by Ms. Legny Rodriguez.*
2. *Acknowledgment letter by Eurotec, Inc., dated January 15, 2013, signed by Mr. Francisco Castro.*
3. *Letter by Tilteco Inc., dated December 20, 2012, certifying that the drawing (No. 12-178) prepared for Eurotec, Inc., signed and sealed by Mr. Walter A. Tillit, Jr., P.E., is engineering wise identical to ASSA's generic drawing (No. 11-114).*

Helmy A. Makar, P.E., M.S.
Product Control Unit Supervisor
NOA No. 13-0117.04
Expiration Date: 07/06/2016
Approval Date: 03/28/2013

GENERAL NOTES:

1. ASSA/60mm BERTHA ROLL-UP SHOWN ON THIS PRODUCT APPROVAL DOCUMENT (P.A.D.) HAS BEEN VERIFIED FOR CODE COMPLIANCE IN ACCORDANCE WITH THE **2010** EDITION OF THE FLORIDA BUILDING CODE.
   THIS ROLL-UP SHUTTER MAY BE INSTALLED AT HIGH VELOCITY HURRICANE ZONES (MIAMI-DADE / BROWARD COUNTIES).
   DESIGN WIND LOADS SHALL BE DETERMINED AS PER SECTION **1620** OF THE ABOVE MENTIONED CODE, USING ASCE 7-10 AND SHALL NOT EXCEED THE MAXIMUM (A.S.D.) DESIGN PRESSURE RATINGS INDICATED ON ON SHEETS 5, 5A, 5B & 7 THRU 14.
   IN ORDER TO VERIFY THE ABOVE CONDITION, ULTIMATE DESIGN WIND LOADS DETERMINED PER ASCE 7-10 SHALL BE FIRST REDUCED TO A.S.D. DESIGN WIND LOADS BY MULTIPLYING THEM BY 0.6 IN ORDER TO COMPARE THESE W/ MAX. (A.S.D) DESIGN PRESSURE RATINGS INDICATED ON SHEETS 5, 5A, 5B & 7 THRU 14.
   IN ORDER TO VERIFY THAT COMPONENTS AND ANCHORS ON THIS P.A.D. AS TESTED, WERE NOT OVER STRESSED, A 33% INCREASE IN ALLOWABLE STRESS FOR WIND LOADS WAS NOT USED IN THEIR ANALYSIS.
   FASTENERS SPACING TO WOOD HAS BEEN DETERMINED IN ACCORDANCE WITH N.D.S. 2005.
   ASSA/60mm BERTHA ROLL-UP ADEQUACY FOR IMPACT AND FATIGUE RESISTANCE HAS BEEN VERIFIED IN ACCORDANCE WITH SECTION **1626** OF THE ABOVE MENTIONED CODE AS PER FENESTRATION TESTING LAB. REPORTS # 2751 & # 2760 AS PER TAS-201, TAS-202 & TAS-203 PROTOCOLS.

2. ALL ALUMINUM EXTRUSIONS SHALL BE ALUMINUM ASSOCIATION 6063-T6 ALLOY & TEMPER (UNLESS OTHERWISE NOTED).

3. ALL SCREWS TO BE STAINLESS STEEL 304 OR 316 AISI SERIES OR CORROSION RESISTANT COATED CARBON STEEL AS PER DIN 50018 W/ 50 ksi YIELD STRENGTH AND 90 ksi TENSILE STRENGTH. ALL TEK SCREWS SHALL BE AS MANUFACTURED BY ITW BUILDEX, INC. AND SHALL COMPLY W/ FBC SECTION 2411.3.3.4.

4. BOLTS TO BE ASTM A-307 GALVANIZED STEEL OR AISI 304 SERIES STAINLESS STEEL, WITH 35 ksi MINIMUM YIELD STRENGTH.

5. STORM BARS AT FLOOR AND CEILING MOUNTING INSTALLATIONS MAY BE REMOVABLE AT NON HURRICANE CONDITIONS. HOWEVER, EACH STORM BAR SHALL BEAR A PERMANENT LABEL IN A VISIBLE PLACE WITH A WARNING NOTE INSTRUCTING THE TENANT OR OWNER THAT STORM BARS MUST BE INSTALLED WITH CORRESPONDING HARDWARE DURING PERIODS OF HURRICANE WARNING AND THAT ROLL UP SHUTTERS WILL NOT OFFER HURRICANE PROTECTION UNLESS ALL STORM BAR ARE INSTALLED AS DIRECTED.

6. REMOVABLE STORM BARS SHALL BE STORED IN A CONSPICUOUS PLACE WITH EASY AND IMMEDIATE ACCESS SO THAT THEY CAN BE REACHED AND INSTALLED ANY TIME (HURRICANE CONDITIONS OR NOT) SLATS ARE ROLLED DOWN. THE EFFECT OF THE SLATS ROLLED DOWN WITHOUT STORM BARS IS; THOSE SLATS WILL SLIP OUT OF TRACK DUE TO THE DEFLECTION CAUSED BY WIND FORCES.
   WHEN REMOVING STORM BARS, ONE STORM BAR SHALL ALWAYS BE LEFT INSTALLED (SHALL NOT BE REMOVED). THIS CONDITION IS ONLY REQUIRED FOR HEADER SPANS EQUAL OR GREATER THAN 12'-0".

7. ANCHORS TO WALL FOR SIDE RAILS & BOX CONNECTION SHALL BE AS FOLLOWS (UNLESS OTHERWISE NOTED):

   (A) TO EXISTING POURED CONCRETE (Min. f'c=3192 psi):
   - 1/4"ø TAPCON ANCHORS, AS MANUFACTURED BY ITW BUILDEX, INC.

   NOTES:
   A.1) MINIMUM EMBEDMENT OF TAPCON ANCHORS INTO POURED CONCRETE IS 1 3/4". NO EMBEDMENT INTO STUCCO SHALL BE CONSIDERED AS PART OF THE REQUIRED EMBEDMENT.
   A.2) IN CASE THAT PRECAST STONE, PRECAST CONCRETE PANELS, OR PAVERS BE FOUND ON THE EXISTING WALL OR FLOOR, ANCHORS SHALL BE LONG ENOUGH TO REACH THE MAIN STRUCTURE BEHIND SUCH PANELS. ANCHORAGE SHALL BE AS INDICATED ON NOTE A.1 ABOVE.

   (B) TO EXISTING CONCRETE BLOCK WALL (ASTM C-90):
   - 1/4" ø TAPCON ANCHORS AS MANUFACTURED BY ITW BUILDEX, INC.

   NOTES:
   B.1) MINIMUM EMBEDMENT OF TAPCON ANCHORS INTO CONCRETE BLOCK UNIT SHALL BE 1 1/4".
   B.2) IN CASE THAT PRECAST STONE OR PRECAST CONCRETE PANELS BE FOUND ON THE EXISTING WALL, ANCHORS SHALL BE LONG ENOUGH TO REACH THE MAIN STRUCTURE BEHIND SUCH PANELS. ANCHORAGE SHALL BE AS INDICATED ON NOTE B.1 ABOVE.

   (C) TO EXISTING WOOD FRAME BUILDING: SOUTHERN PINE #2 W/ G=0.55 MIN.
   - 1/4"ø LAG SCREWS PER N.D.S.

   NOTES:
   C.1) MINIMUM THREADED PENETRATION OF LAG SCREWS INTO THE WOOD FRAME UNIT SHALL BE 1 1/2" NO THREADED PENETRATION INTO STUCCO SHALL BE CONSIDERED AS PART OF THE REQUIRED THREADED PENETRATION.
   C.2) MINIMUM EDGE DISTANCE OF LAG SCREWS INTO WOOD SHALL BE AS INDICATED ON SHEET 8.
   C.3) IN CASE THAT PRECAST STONE, PRECAST CONCRETE OR BRICK PANELS, VENEER OR PAVERS BE FOUND ON THE EXISTING WALL, ANCHORS SHALL BE LONG ENOUGH TO REACH THE MAIN SUBSTRATE BEHIND SUCH PANELS.
   MINIMUM THREADED PENETRATION SHALL BE AS INDICATED ON NOTE C.1 ABOVE.

8. ANCHORS SHALL BE INSTALLED FOLLOWING ALL OF THE RECOMMENDATIONS AND SPECIFICATIONS OF THE ANCHOR'S MANUFACTURER.

9. ANCHORS REQUIRED FOR STORM BARS, HEADER & MULLIONS CONNECTIONS TO CONCRETE (MIN. f'c=3000 PSI) SHALL BE AS SPECIFIED ON APPLICABLE SECTIONS SHOWN ON SHEETS 5, 5A, 5B, 6, 7 OF 14 RESPECTIVELY.

   -CALK-IN ANCHORS TO BE AS MANUFACTURED BY POWERS FASTENERS, INC.
   -TAPCON ANCHORS AS MANUFACTURED BY ITW BUILDEX, INC.
   -KWIK BOLT TZ EXPANSION ANCHORS AS MANUFACTURED BY HILTI, INC.

   MINIMUM EDGE DISTANCE AND SPACING FOR ABOVE MENTIONED ANCHORS SHALL BE AS INDICATED BELOW OR AT ABOVE MENTIONED SHEET. EDGE DISTANCE AND EMBEDMENTS ARE BEYOND ANY FINISH MATERIAL.

ANCHOR	SPACING	EDGE DISTANCE	MINIMUM EMBEDMENT POURED CONCRETE	MINIMUM EMBEDMENT CONCRETE BLOCK
-1/4"ø TAPCON	3"	3"	1 3/4" (Min. f'c=3192 psi)	1 1/4" (ASTM C-90)
-1/4"ø CALK-IN	2 1/2"	3"	7/8" (Min. f'c=3000 psi)	-
-3/8"ø CALK-IN	3 3/4"	4 1/2"	1 1/4" (Min. f'c=3000 psi)	-
-1/2"ø CALK-IN	5"	6"	1 1/2" (Min. f'c=3000 psi)	-
-5/16"ø TAPCON XL	3 3/4"	4"	-	1 3/4" (ASTM C-90, GROUT FILLED)
-3/8"ø KWIK BOLT TZ	6"	4 3/8"	2" (Min. f'c=3000 psi)	-
-1/2"ø KWIK BOLT TZ	9 3/4"	6"	3 1/4" (Min. f'c=3000 psi)	-

10. IT SHALL BE THE RESPONSIBILITY OF THE CONTRACTOR TO VERIFY THE SOUNDNESS OF THE STRUCTURE WHERE SHUTTER IS TO BE ATTACHED TO INSURE PROPER ANCHORAGE. THIS SHUTTER SHALL ONLY BE ATTACHED TO CONCRETE, BLOCK OR WOOD FRAME BUILDINGS.

11. THE INSTALLATION CONTRACTOR IS TO SEAL/CAULK ALL SHUTTER COMPONENT EDGES WHICH REMAIN IN CONTINUOUS CONTACT WITH THE BUILDING TO PREVENT WIND/RAIN INTRUSION. CAULK AND SEAL SHUTTER TRACKS ALL AROUND FULL LENGTH.

12. ROLL-UP MECHANISM NOT PART OF THIS APPROVAL, BUT SHALL BE CERTIFIED BY AN INDEPENDENT TESTING AGENCY.

13. ROLL-UP SHUTTER INSTALLATION SHALL COMPLY WITH SPECS INDICATED IN THIS DRAWING PLUS ANY BUILDING AND ZONING REGULATIONS PROVIDED BY THE JURISDICTION WHERE PERMIT IS APPLIED TO.

14. (A) THIS (P.A.D.) PREPARED BY THIS ENGINEER IS GENERIC AND DOES NOT PROVIDE INFORMATION FOR A SITE SPECIFIC PROJECT; I.E. WHERE THE SITE CONDITIONS DEVIATE FROM THE P.A.D.

    (B) CONTRACTOR TO BE RESPONSIBLE FOR THE SELECTION, PURCHASE AND INSTALLATION INCLUDING LIFE SAFETY OF THIS PRODUCT, BASED ON THIS PRODUCT P.A.D. PROVIDED HE/SHE DOES NOT DEVIATE FROM THE CONDITIONS DETAILED ON THIS DOCUMENT. CONSTRUCTION SAFETY AT SITE IS THE CONTRACTOR'S RESPONSIBILITY.

    (C) THIS PRODUCT APPROVAL DOCUMENT WILL BE CONSIDERED INVALID IF ALTERED BY ANY MEANS.

    (D) SITE SPECIFIC PROJECTS SHALL BE PREPARED BY A FLORIDA REGISTERED ENGINEER OR ARCHITECT WHICH WILL BECOME THE ENGINEER OF RECORD (E.O.R) FOR THE PROJECT AND WHO WILL BE RESPONSIBLE FOR THE PROPER USE OF THE P.A.D. ENGINEER OF RECORD, ACTING AS DELEGATED ENGINEER TO THE P.A.D. ENGINEER SHALL SUBMIT TO THIS LATHER THE SITE SPECIFIC DRAWINGS FOR REVIEW

    (E) THIS P.A.D. SHALL BEAR THE DATE AND ORIGINAL SEAL AND SIGNATURE OF THE PROFESSIONAL ENGINEER OF RECORD THAT PREPARED IT.

15. PERMANENT SHUTTER MANUFACTURER'S LABEL SHALL BE PLACED ON THE EXPOSED SURFACE OF THE SIDE RAIL APPROXIMATELY 4" BELOW THE TOP OF SUCH RAIL, LABEL SHALL READ AS FOLLOWS:
    EUROTEC, INC.
    MIAMI, FL.
    MIAMI-DADE COUNTY PRODUCT CONTROL APPROVED.

16. ONCE ALL COMPONENTS HAVE BEEN CHOSEN, CHECK FOR COMPLIANCE WITH SECTION 1615.3.9 (F.B.C. 2010)

PRODUCT REVISED
as complying with the Florida Building Code
Acceptance No 13-0117.04
Expiration Date 07/06/2016
By Miami Dade Product Control
MIAMI-DADE COUNTY

WALTER A. TILLIT JR. LICENSE No. 44167 STATE OF FLORIDA PROFESSIONAL ENGINEER
P.E. SEAL/SIGNATURE/DATE

©2012 TILTECO INC.

TILTECO INC.
TILLIT TESTING & ENGINEERING COMPANY
6355 N.W. 36th. St., Ste. 305 - VIRGINIA GARDENS, FL 33166
Phone : (305) 871-1530 , Fax : (305) 871-1531
e-mail: tilteco@aol.com
EB-0006719
WALTER A. TILLIT Jr., P.E.
FLORIDA Lic. # 44167

FLORIDA BUILDING CODE. (High Velocity Hurricane Zone)

ASSA/60mm BERTHA ROLL-UP

EUROTEC, INC.
(ASSA MEMBER # 277)
8315 N.W. 74TH STREET
MIAMI, FL. 33166
PHONE:(305)406-0944, FAX:(305)406-0946

REV. No	DESCRIPTION	DATE	REV. No	DESCRIPTION	DATE
1	OLD 11-055	12/21/12	3		
2			4		

DRAWN BY: A.G.
DATE: 12/21/12
DRAWING No: 12-178
SHEET 1 OF 14

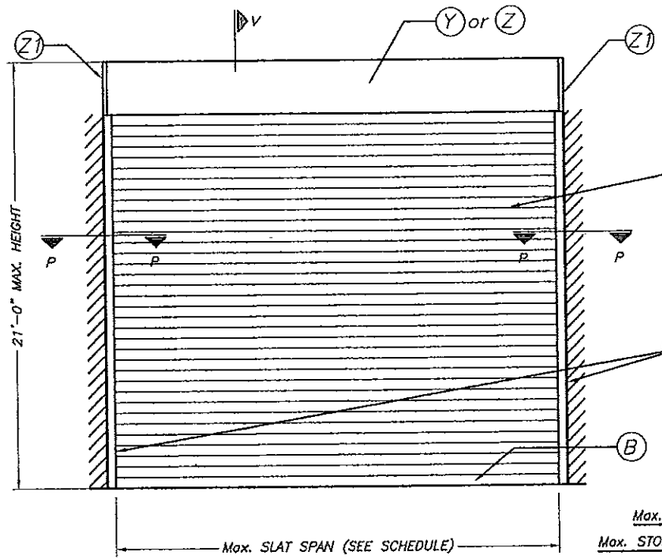

TYPICAL SINGLE UNIT ELEVATION (NO STORM BARS REQUIRED)

NOTE: SEE SHEET 2 & 3 FOR COMPONENTS NOMENCLATURE.

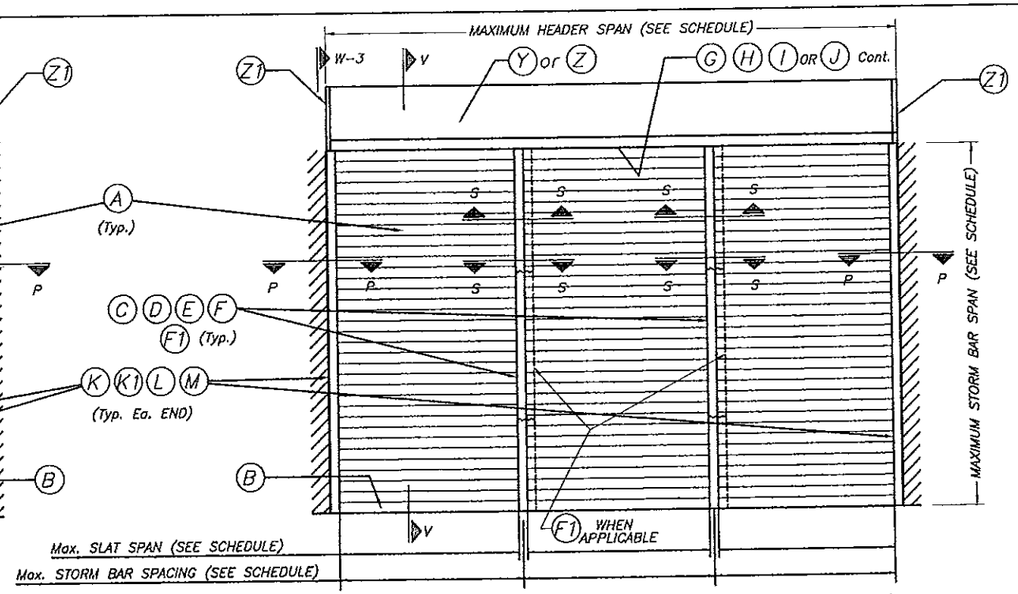

TYPICAL MULTIPLE UNIT ELEVATION (STORM BARS REQUIRED)

NOTE: SEE SHEET 2 & 3 FOR COMPONENTS NOMENCLATURE.

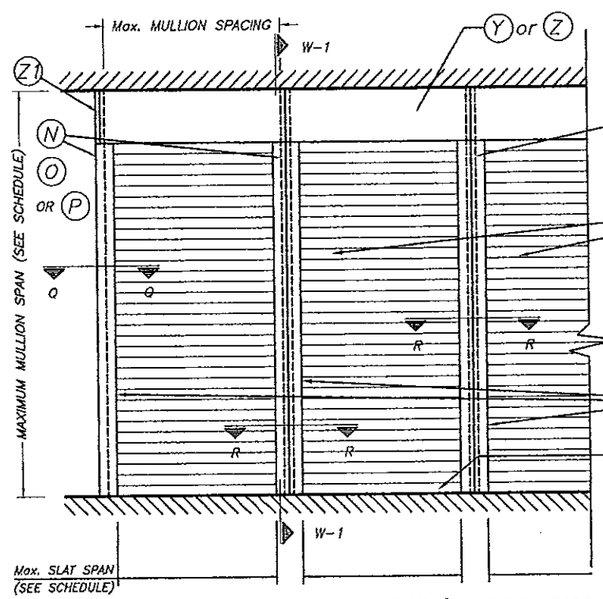

TYPICAL CONSECUTIVE SINGLE UNIT ELEVATION (NO STORM BARS REQUIRED)

NOTE: SEE SHEET 2 & 3 FOR COMPONENTS NOMENCLATURE.

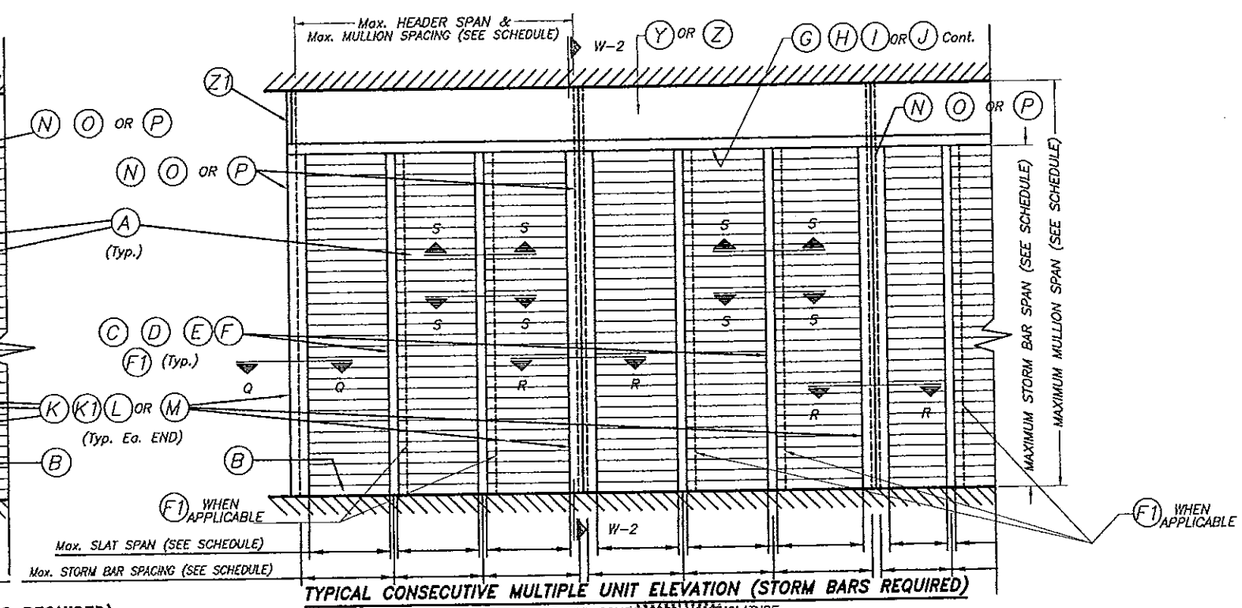

TYPICAL CONSECUTIVE MULTIPLE UNIT ELEVATION (STORM BARS REQUIRED)

NOTE: SEE SHEET 2 & 3 FOR COMPONENTS NOMENCLATURE.

NOTE:
SEE SECTIONS ON
SHEETS 4 THRU 7.

FLORIDA BUILDING CODE. (High Velocity Hurricane Zone)

PRODUCT REVISED
as complying with the Florida
Building Code
Acceptance No 13-0117.04
Expiration Date 07/06/2016
By
Miami Dade Product Control
MIAMI-DADE COUNTY

WALTER A. TILLIT JR
LICENSE
No. 44167
STATE OF FLORIDA
PROFESSIONAL ENGINEER
P.E. SEAL/SIGNATURE/DATE

©2012 TILTECO INC.

TILTECO INC.
TILLIT TESTING & ENGINEERING COMPANY
6355 N.W. 36th. St., Ste. 305 - VIRGINIA GARDENS, FL 33166
Phone : (305) 871-1530 , Fax : (305) 871-1531
e-mail: tilteco@aol.com
EB-0006719
WALTER A. TILLIT Jr., P.E.
FLORIDA Lic. # 44167

ASSA/60mm BERTHA ROLL-UP

EUROTEC, INC.
(ASSA MEMBER # 277)
8315 N.W. 74TH STREET
MIAMI, FL. 33166
PHONE:(305)406-0944, FAX:(305)406-0946

REV. No	DESCRIPTION	DATE	REV. No	DESCRIPTION	DATE
1	OLD 11-058	12/21/12	3		
2			4		

DRAWN BY: A.G.
12/21/12 DATE
12-178 DRAWING No
SHEET 1A OF 14

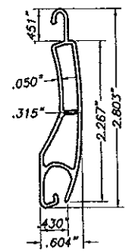

(A) TYPE 1 SLAT

EXTRUDED ALUMINUM SLAT
6063-T6 ALUMINUM ALLOY
SCALE: 1/2" = 1"

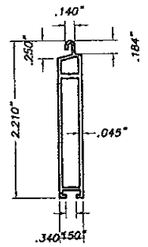

(B) TYPE 2 SLAT

EXTRUDED ALUMINUM BOTTOM SLAT
6063-T6 ALUMINUM ALLOY
SCALE: 1/2" = 1"

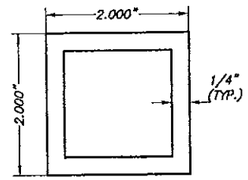

(C) TYPE 1 STORM BAR

2" EXTRUDED STORM BAR
6063-T6 ALUMINUM ALLOY
SCALE: 1/2" = 1"

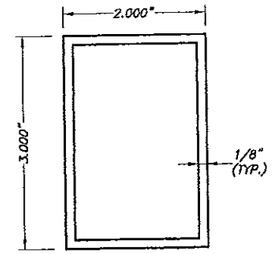

(D) TYPE 2 STORM BAR

3" EXTRUDED STORM BAR
6063-T6 ALUMINUM ALLOY
SCALE: 1/2" = 1"

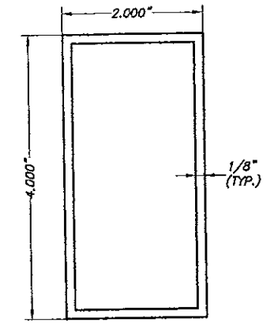

(E) TYPE 3 STORM BAR

4" EXTRUDED STORM BAR
6063-T6 ALUMINUM ALLOY
SCALE: 1/2" = 1"

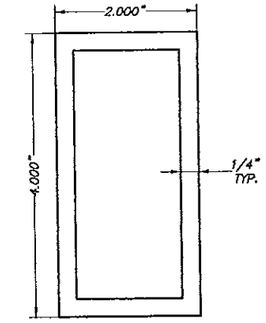

(F) TYPE 4 STORM BAR

4" HEAVY EXTRUDED STORM BAR
6063-T6 ALUMINUM ALLOY
SCALE: 1/2" = 1"

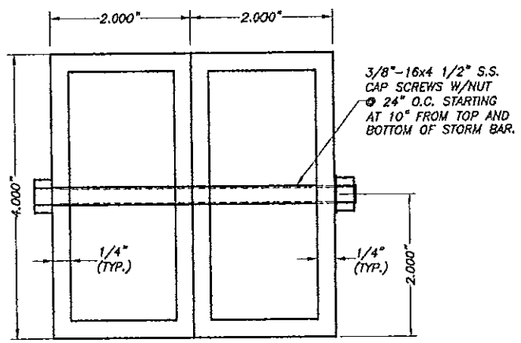

(F1) TYPE 5 STORM BAR

4" HEAVY EXTRUDED STORM BAR
6063-T6 ALUMINUM ALLOY
SCALE: 1/2" = 1"

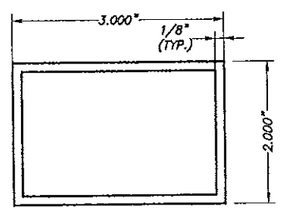

(G) TYPE 1 HEADER

6063-T6 ALUMINUM ALLOY
SCALE: 1/2" = 1"

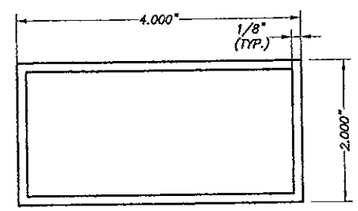

(H) TYPE 2 HEADER

6063-T6 ALUMINUM ALLOY
SCALE: 1/2" = 1"

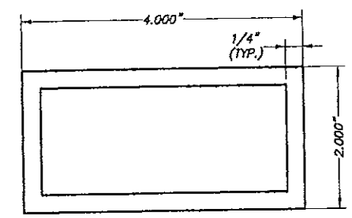

(I) TYPE 3 HEADER

6063-T6 ALUMINUM ALLOY
SCALE: 1/2" = 1"

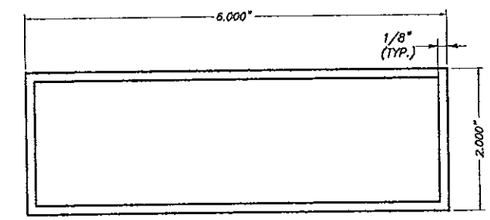

(J) TYPE 4 HEADER

6063-T6 ALUMINUM ALLOY
SCALE: 1/2" = 1"

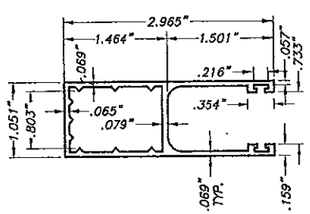

(K) TYPE 1 SIDE RAIL

6063-T6 Alum. ALLOY
SCALE: 1/2" = 1"

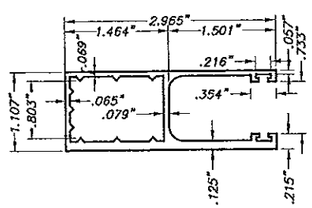

(K1) TYPE 2 SIDE RAIL

6063-T6 Alum. ALLOY
SCALE: 1/2" = 1"

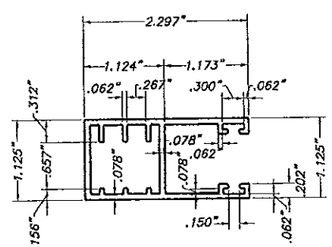

(L) TYPE 3 SIDE RAIL

6063-T6 Alum. ALLOY
SCALE: 1/2" = 1"

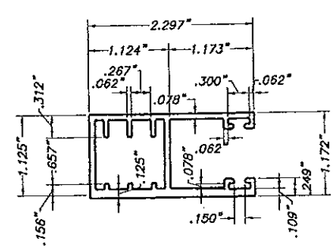

(M) TYPE 4 SIDE RAIL

6063-T6 Alum. ALLOY
SCALE: 1/2" = 1"

FLORIDA BUILDING CODE. (High Velocity Hurricane Zone)

PRODUCT REVISED
as complying with the Florida Building Code
Acceptance No 13-0117.04
Expiration Date 07/06/2016
By
Miami Dade Product Control
MIAMI-DADE COUNTY

WALTER A. TILLIT JR. LICENSE No. 44167 STATE OF FLORIDA PROFESSIONAL ENGINEER
P.E. SEAL/SIGNATURE/DATE

©2012 TILTECO INC.

TILTECO INC.
TILLIT TESTING & ENGINEERING COMPANY
6355 N.W. 36th. St., Ste. 305 - VIRGINIA GARDENS, FL 33166
Phone : (305) 871-1530 , Fax : (305) 871-1531
e-mail: tilteco@aol.com
EB-0006719
WALTER A. TILLIT Jr., P.E.
FLORIDA Lic. # 44167

ASSA/60mm BERTHA ROLL-UP

EUROTEC, INC.
(ASSA MEMBER # 277)
8316 N.W. 74TH STREET
MIAMI, FL. 33166
PHONE:(305)406-0944, FAX:(305)406-0946

REV. No	DESCRIPTION	DATE	REV. No	DESCRIPTION	DATE
1	OLD 11-055	12/21/12	3		
2			4		

DRAWN BY: A.G.
12/21/12 DATE
12-178 DRAWING No
SHEET 2 OF 14

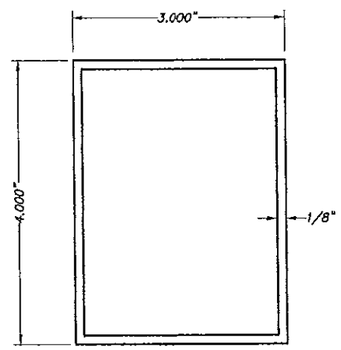

(N) TYPE 1 MULLION

4" EXTRUDED MULLION
6063-T6 ALUMINUM ALLOY
SCALE: 1/2" = 1"

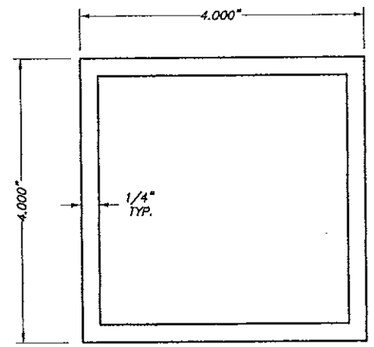

(O) TYPE 2 MULLION

4" EXTRUDED MULLION
6063-T6 ALUMINUM ALLOY
SCALE: 1/2" = 1"

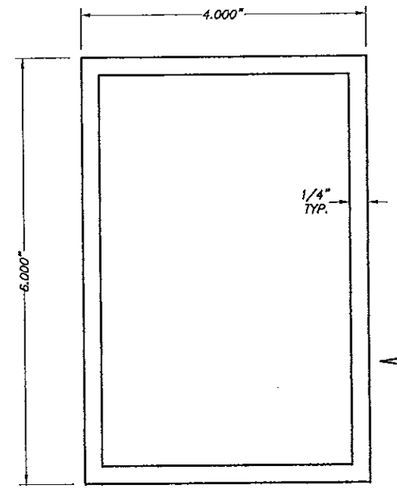

(P) TYPE 3 MULLION

6" EXTRUDED MULLION
6063-T6 ALUMINUM ALLOY
SCALE: 1/2" = 1"

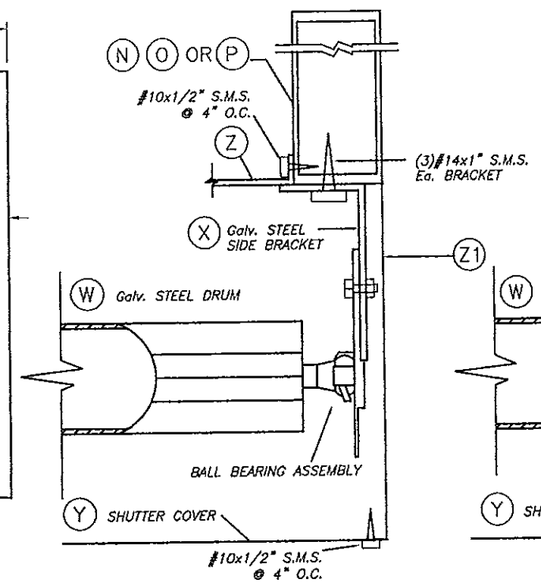

BRACKET DETAIL 1A

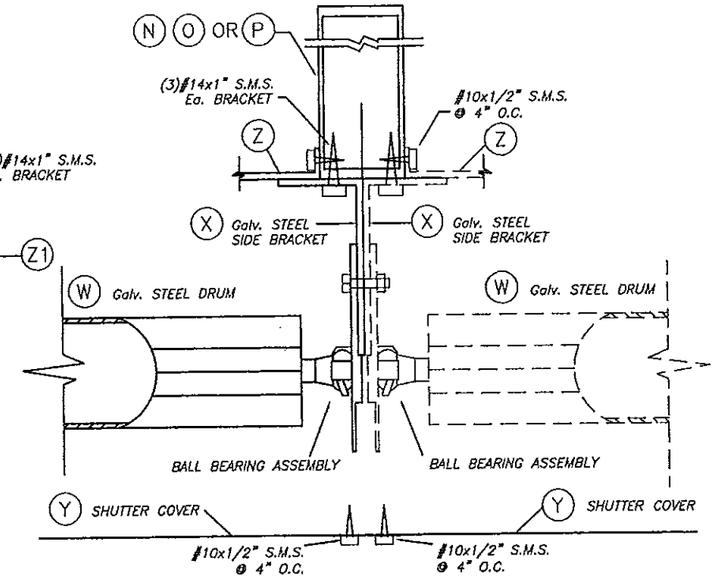

BRACKET DETAIL 2

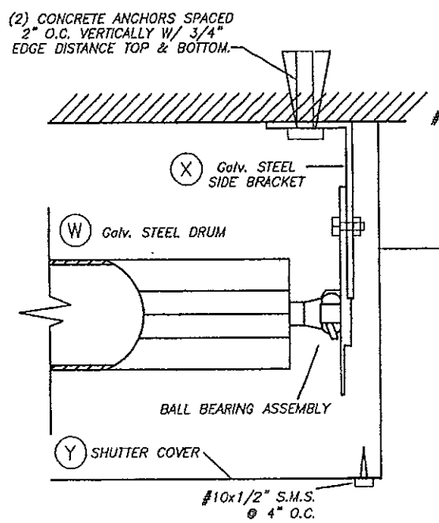

BRACKET DETAIL 1

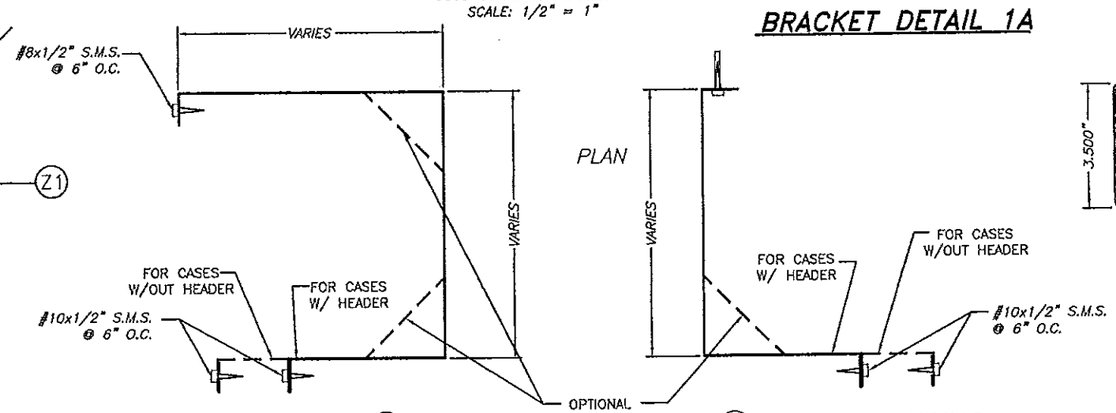

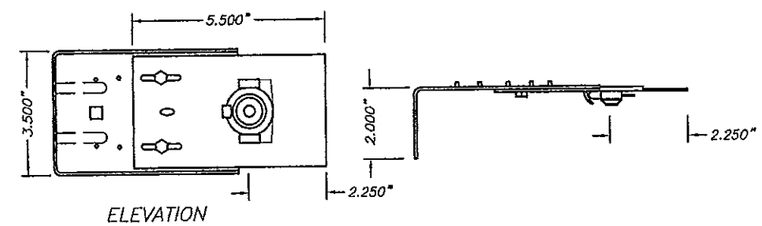

(X) SIDE BRACKET

SCALE: 1/4" = 1"
1010 ELITE ROLLED STEEL F. E.
P. O. 1 Z 200 DESIGNATION
Ftu= 410 NW/MM2. % OF STRETCH
MINIMAL ON TEST. BAR OF 80 MM: 24 %
G-90 GALVANIZED COATING Thk.: .060"

(Y) WALL HOUSING

SCALE: 3/16" = 1"
3105-H14 ALUMINUM ALLOY
THICKNESS: .032"

(Z) WALL HOUSING

SCALE: 3/16" = 1"
3105-H14 ALUMINUM ALLOY
THICKNESS: .032"

END BRACKET SYSTEM

* SEE NOTE 12 ON SHEET 1

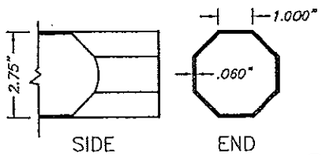

(W) DRUM

SCALE: 1/4" = 1"
1010 ELITE ROLLED STEEL F. E.
P. O. 1 Z 200 DESIGNATION
Ftu= 410 NW/MM2. % OF STRETCH
MINIMAL ON TEST. BAR OF 80 MM: 24 %
G-90 GALVANIZED COATING Thk.: .060"

(Z1) SHUTTER SIDE COVER

SCALE: 3/16" = 1"
3105-H14 ALUMINUM ALLOY
THICKNESS: .032"

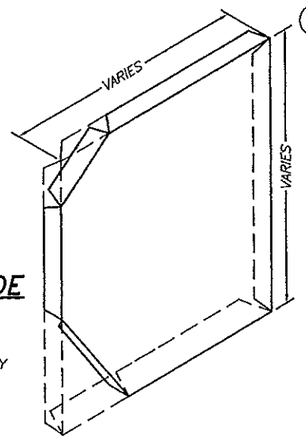

PRODUCT REVISED
as complying with the Florida Building Code
Acceptance No 13-0117.04
Expiration Date 07/06/2016
By
Miami Dade Product Control
MIAMI-DADE COUNTY

WALTER A. TILLIT JR.
LICENSE
No. 44167
STATE OF FLORIDA
PROFESSIONAL ENGINEER
P.E. SEAL/SIGNATURE/DATE

©2012 TILTECO INC.

TILTECO INC.
TILLIT TESTING & ENGINEERING COMPANY
6355 N.W. 36th. St., Ste. 305 - VIRGINIA GARDENS, FL 33166
Phone : (305) 871-1530 , Fax : (305) 871-1531
e-mail: tilteco@aol.com
EB-0006719
WALTER A. TILLIT Jr., P.E.
FLORIDA Lic. # 44167

FLORIDA BUILDING CODE. (High Velocity Hurricane Zone)

ASSA/60mm BERTHA ROLL-UP

EUROTEC, INC.
(ASSA MEMBER # 277)
8315 N.W. 74TH STREET
MIAMI, FL. 33166
PHONE:(305)406-0944, FAX:(305)406-0946

REV. No	DESCRIPTION	DATE	REV. No	DESCRIPTION	DATE
1	OLD 11-055	12/21/12	3		
2			4		

DRAWN BY: A.G.
12/21/12 DATE
12-178 DRAWING No
SHEET 3 OF 14

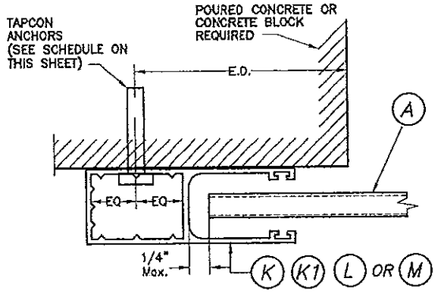

SECTION P – P (1) : WALL MOUNT

SCALE: 1/2" = 1"

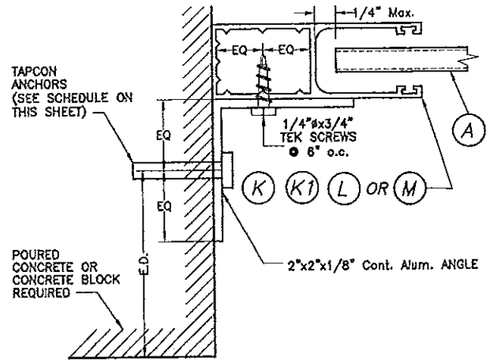

SECTION P – P (2) : SIDE WALL MOUNT

SCALE: 1/2" = 1"

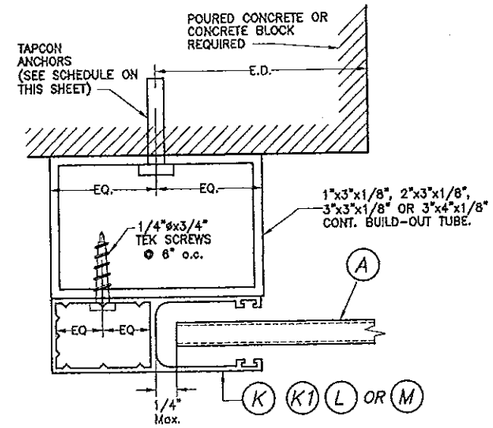

SECTION P – P (3) : BUILD-OUT MOUNT

SCALE: 1/2" = 1"

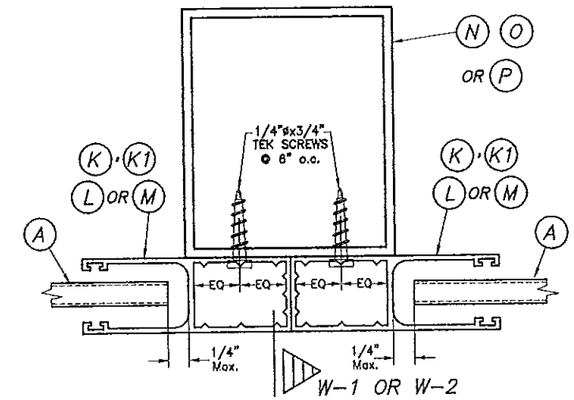

SECTION R – R : MULLION MOUNT (FACE MOUNT)

SCALE: 1/2" = 1"

SIDE RAIL ANCHOR SCHEDULE MAXIMUM DESIGN PRESSURE RATING (p.s.f.) AND CORRESPONDING MAXIMUM ANCHOR SPACING(in) * FOR SIDE RAILS (K), (K1), (L) & (M) CONNECTION TO POURED CONCRETE OR CONCRETE BLOCK WALL

(USE MAXIMUM VALUES BETWEEN POSITIVE AND NEGATIVE LOAD)

MAXIMUM A.S.D. PRESSURE RATING (p.s.f.)	SIDE RAILS (K) & (K1)			SIDE RAILS (L) & (M)		
	WALL MOUNT	INSIDE MOUNT	BUILD-OUT MOUNT	WALL MOUNT	INSIDE MOUNT	BUILD-OUT MOUNT
80 OR LESS	6"	4"	6"	6"	4"	6"
	6"	6"	6"	6"	6"	6"
>80 TO 150	3 1/2"	N/A	5"	3"	N/A	5"
	6"	6"	6"	6"	6"	6"
>150 TO 195	3"	N/A	4 1/2"	N/A	N/A	4 1/2"
	6"	5"	6"	6"	5"	6"

CONCRETE BLOCK
POURED CONCRETE

SUBSTRATE LEGEND

* *MAXIMUM ANCHOR SPACING (in.) AT SIDE RAILS VERSUS EDGE DISTANCE = E. D.*

MAXIMUM ANCHOR SPACING ARE VALID FOR 3" EDGE DISTANCE.

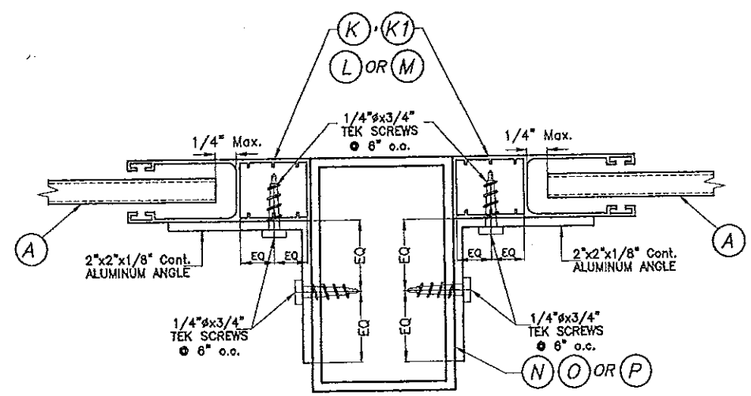

SECTION R – R : MULLION MOUNT (INSIDE MOUNT)

SCALE: 1/2" = 1"

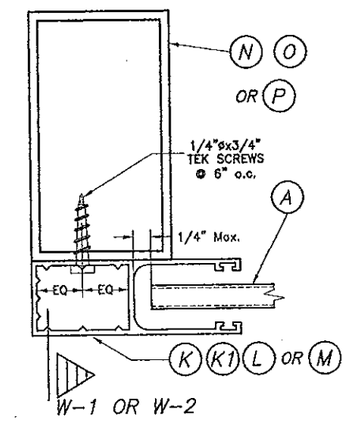

SECTION Q – Q : MULLION MOUNT (FACE MOUNT)

SCALE: 1/2" = 1"

FLORIDA BUILDING CODE. (High Velocity Hurricane Zone)

PRODUCT REVISED
as complying with the Florida Building Code
Acceptance No 13-0117.04
Expiration Date 07/06/2016
By Helen A. Miller
Miami Dade Product Control
MIAMI-DADE COUNTY

WALTER A. TILLIT JR. LICENSE No. 44167 STATE OF FLORIDA PROFESSIONAL ENGINEER
R.E. SEAL / SIGNATURE / DATE

©2012 TILTECO INC.

TILTECO INC.
TILLIT TESTING & ENGINEERING COMPANY
8355 N.W. 36th. St., Ste. 305 – VIRGINIA GARDENS, FL 33166
Phone : (305) 871-1530 , Fax : (305) 871-1531
e-mail: tilteco@aol.com
EB-0006719
WALTER A. TILLIT Jr., P.E.
FLORIDA Lic. # 44167

ASSA/60mm BERTHA ROLL-UP

EUROTEC, INC.
(ASSA MEMBER # 277)
8316 N.W. 74TH STREET
MIAMI, FL. 33166
PHONE:(305)406-0944, FAX:(305)406-0946

REV. No	DESCRIPTION	DATE	REV. No	DESCRIPTION	DATE
1	OLD 11-058	12/21/12	3		
2			4		

DRAWN BY: A.G.
12/21/12 DATE
12-178 DRAWING No
SHEET 4 OF 14

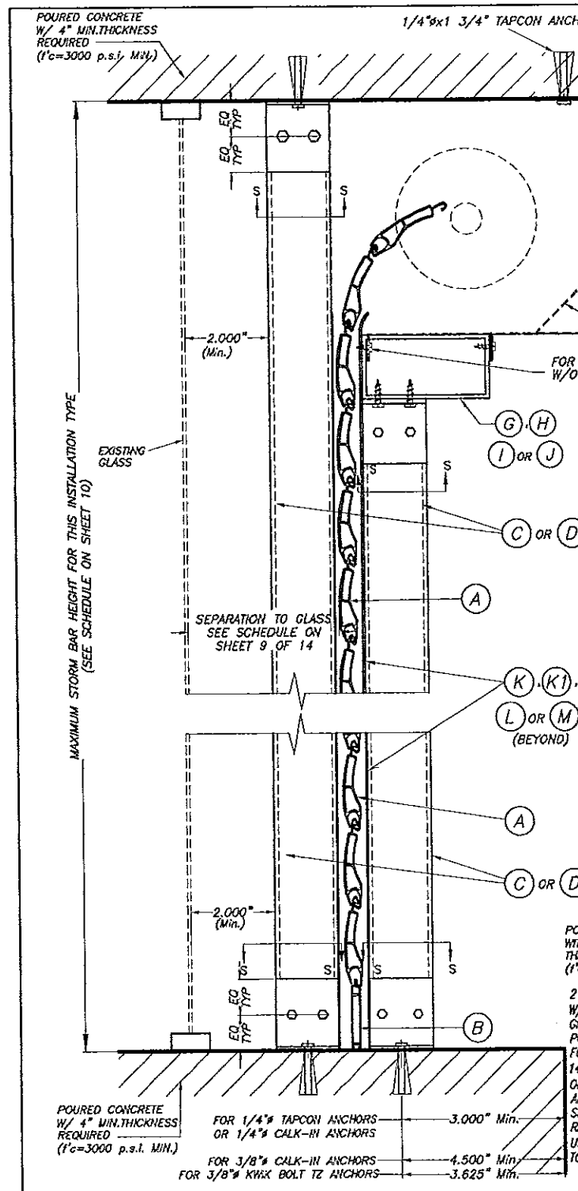

CEILING & FLOOR MOUNTING SECTION V-V(2) INSTALLATION W/ FIXED OR REMOVABLE STORM BARS W/CONCRETE ANCHORS

(SEE SECTION "S" FOR ANCHOR TYPE REQUIREMENT)

SCALE : N. T. S.

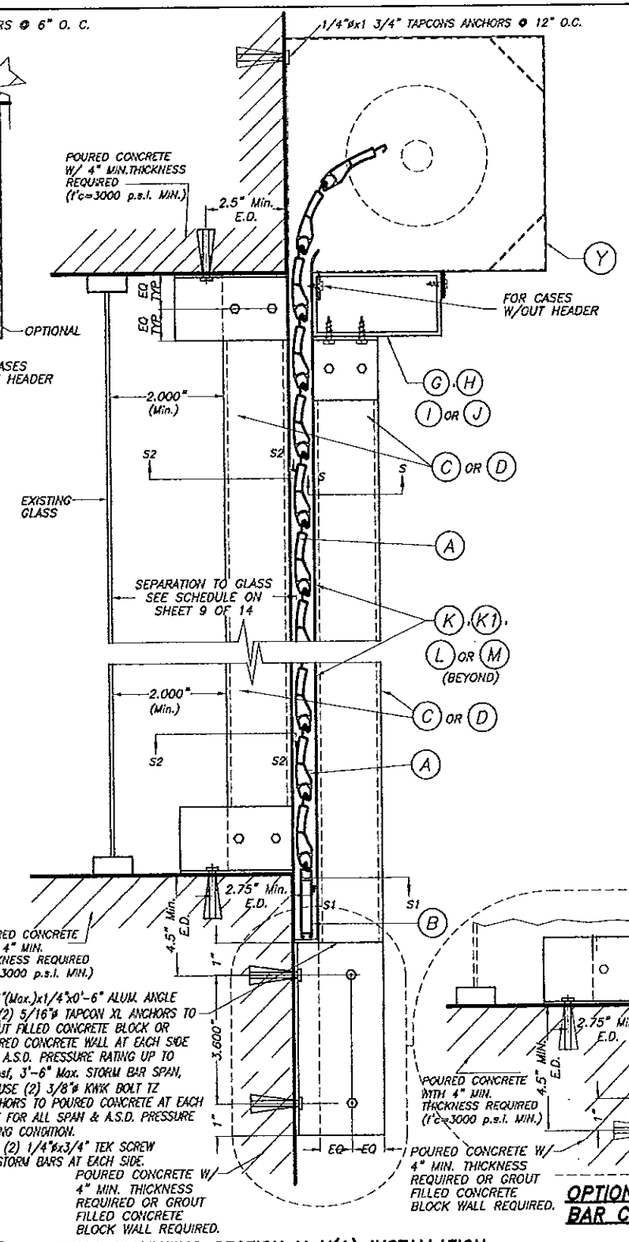

WALL MOUNTING SECTION V-V(1) INSTALLATION W/ FIXED STORM BARS W/ CONCRETE ANCHORS

SCALE : N. T. S.

SECTION V - V

SINGLE SPAN SECTIONS AND DETAILS ARE SIMILAR TO ABOVE SHOWN WITHOUT STORM BAR & HEADERS.

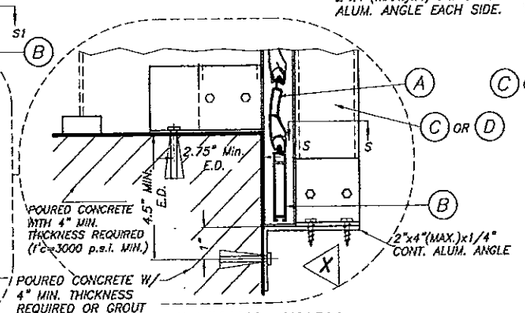

OPTIONAL STORM BAR CONNECTION

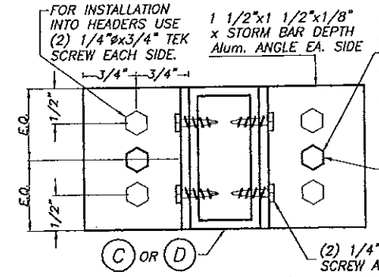

FOR INSTALLATIONS INTO CONCRETE, USE (1) 1/4"ø TAPCON ANCHOR, EACH SIDE AT CENTER OF ANGLE FOR ANY SLAT & STORM BAR SPAN & A.S.D. PRESSURE RATING UNDER 40psf.
FOR A.S.D. PRESSURE RATING BETWEEN 40psf & 100psf, USE SAME CONNECTION W/ **TABLE 5** FOR MAX. SLAT & STORM BAR SPAN LIMITATIONS.
FOR A.S.D. PRESSURE RATING GREATER THAN 100psf AND ANY SLAT & STORM BAR SPAN, USE (1) 3/8"ø KWIK BOLT TZ ANCHOR, EACH SIDE AT CENTER OF ANGLE

SECTION S - S (FOR FIXED STORM BAR)

SCALE : 1/2" = 1"

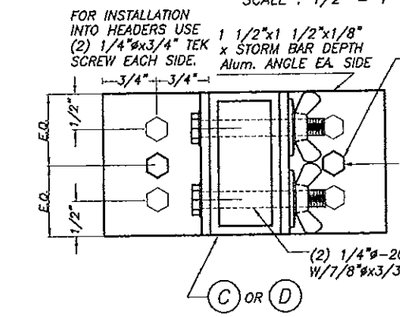

FOR INSTALLATIONS INTO CONCRETE, USE (1) 1/4"øx7/8" CALK-IN ANCHOR *, EACH SIDE AT CENTER OF ANGLE FOR ANY SLAT & STORM BAR SPAN & A.S.D. PRESSURE RATING UNDER 40psf.
FOR A.S.D. PRESSURE RATING BETWEEN 40psf & 100psf, USE SAME CONNECTION W/ **TABLE 5** FOR MAX. SLAT & STORM BAR SPAN LIMITATIONS.
FOR A.S.D. PRESSURE RATING GREATER THAN 100psf AND ANY SLAT & STORM BAR SPAN, USE (1) 3/8"øx1 1/4" CALK-IN ANCHOR *, EACH SIDE AT CENTER OF ANGLE

SECTION S - S (FOR REMOVABLE STORM BAR)

SCALE : 1/2" = 1"

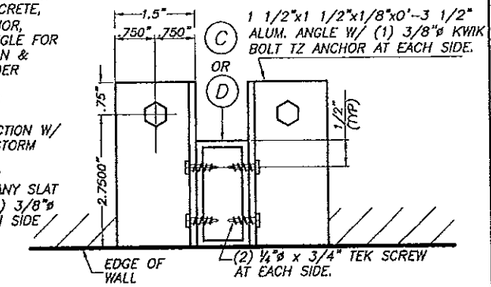

SECTION S2 - S2

SCALE : 1/4" = 1"

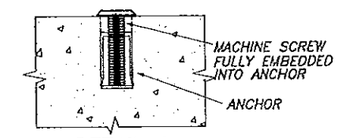

DETAIL A

N.T.S.

* 1/4" ø-20 OR 3/8" ø-16 MACHINE SCREWS USED JOINTLY W/ 1/4" ø x 7/8" OR 3/8" ø x 1 1/4" CALK-IN ANCHORS RESPECTIVELY SHALL BE LEFT TOGETHER W/ ANCHORS AT THE TIME STORM BARS ARE REMOVED. (SEE DET. A).

TABLE 5

A.S.D. PRESSURE RATING (p.s.f.)	MAX. SLAT SPAN	"L" MAX. STORM BAR SPAN
40.0	3'-0"	8'-0"
	4'-0"	7'-9"
	5'-0"	6'-11"
	6'-0"	5'-9"
50.0	3'-0"	8'-0"
	4'-0"	6'-11"
	5'-0"	5'-6"
	6'-0"	4'-7"
60.0	3'-0"	7'-4"
	4'-0"	5'-9"
	5'-0"	4'-7"
80.0	3'-0"	5'-9"
	4'-0"	4'-4"
100.0	3'-0"	4'-7"
	4'-0"	3'-5"

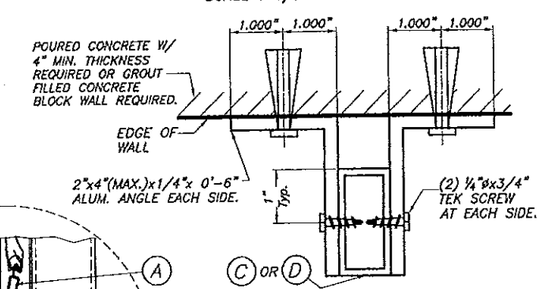

SECTION S1 - S1

SCALE : N. T. S.

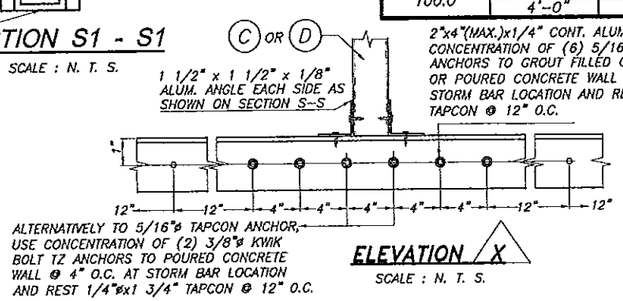

ELEVATION X

SCALE : N. T. S.

FLORIDA BUILDING CODE. (High Velocity Hurricane Zone)

PRODUCT REVISED
as complying with the Florida Building Code
Acceptance No 13-0117.04
Expiration Date 07/06/2016
By
Miami Dade Product Control
MIAMI-DADE COUNTY

WALTER A. TILLIT JR. LICENSE No. 44167 STATE OF FLORIDA PROFESSIONAL ENGINEER
P.E. SEAL/SIGNATURE/DATE

©2012 TILTECO INC.

TILTECO INC.
TILLIT TESTING & ENGINEERING COMPANY
6355 N.W. 36th. St., Ste. 305 - VIRGINIA GARDENS, FL 33166
Phone : (305) 871-1530 , Fax : (305) 871-1531
e-mail: tilteco@aol.com
EB-0006719
WALTER A. TILLIT Jr., P.E.
FLORIDA Lic. # 44167

ASSA/60mm BERTHA ROLL-UP

EUROTEC, INC.
(ASSA MEMBER # 277)
8315 N.W. 74TH STREET
MIAMI, FL. 33166
PHONE:(305)406-0944, FAX:(305)406-0946

REV. No	DESCRIPTION	DATE	REV. No	DESCRIPTION	DATE
1	OLD 11-058	12/21/12	3		
2	SECTION S-S	6/3/09	4		

DRAWN BY: A.G.
12/21/12 DATE
12-178 DRAWING No
SHEET 5 OF 14

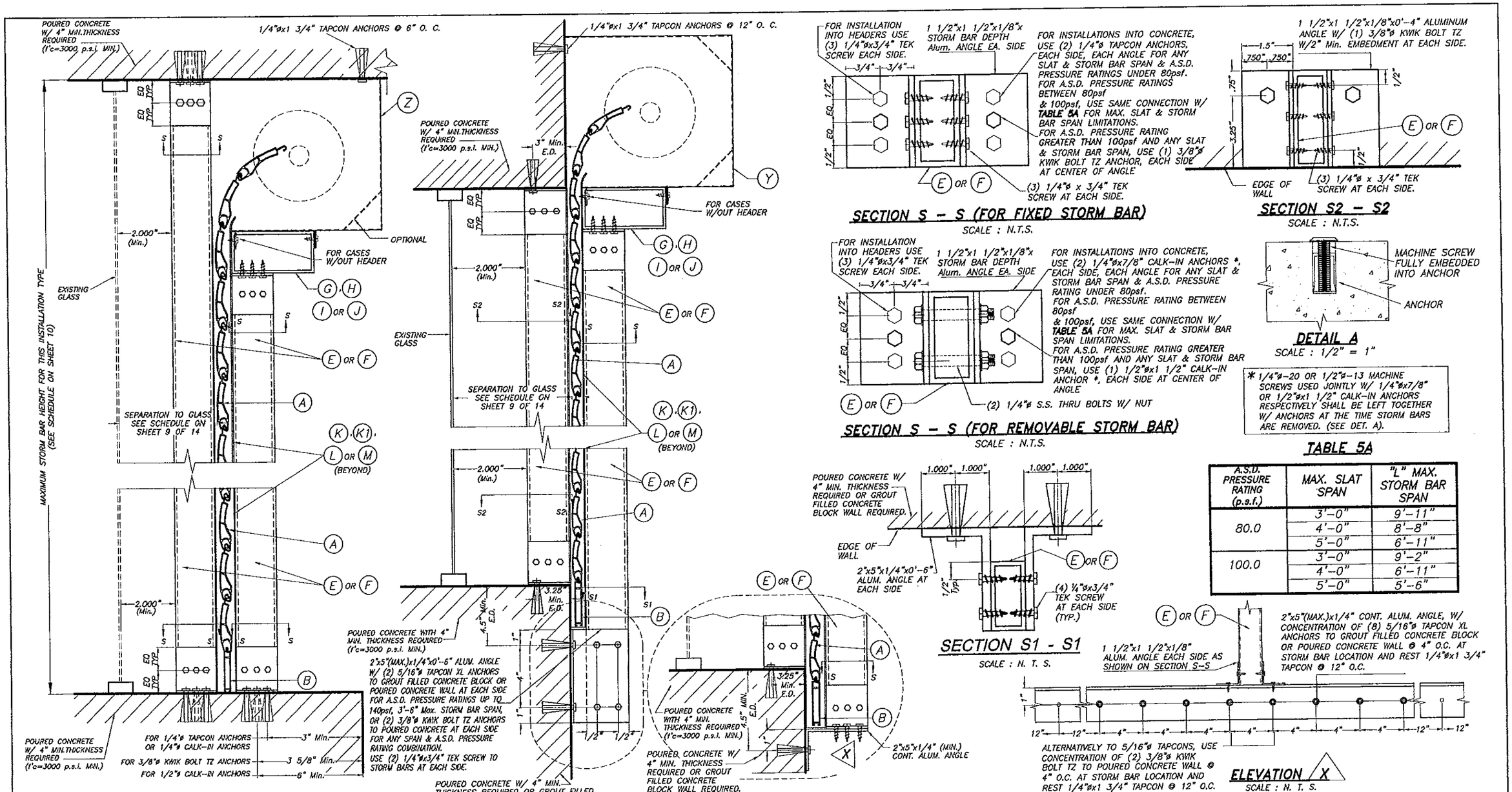

CEILING & FLOOR MOUNTING SECTION V-V(2) INSTALLATION W/ FIXED OR REMOVABLE STORM BARS W/CONCRETE ANCHORS

(SEE SECTION "S" FOR ANCHOR TYPE REQUIREMENT)

SCALE : N.T.S.

WALL MOUNTING SECTION V-V(1) INSTALLATION W/ FIXED STORM BARS W/CONCRETE ANCHORS

SCALE : N.T.S.

OPTIONAL STORM BAR CONNECTION

SECTION S - S (FOR FIXED STORM BAR)

SCALE : N.T.S.

SECTION S2 - S2

SCALE : N.T.S.

DETAIL A

SCALE : 1/2" = 1"

SECTION S - S (FOR REMOVABLE STORM BAR)

SCALE : N.T.S.

* 1/4"ø-20 OR 1/2"ø-13 MACHINE SCREWS USED JOINTLY W/ 1/4"øx7/8" OR 1/2"øx1 1/2" CALK-IN ANCHORS RESPECTIVELY SHALL BE LEFT TOGETHER W/ ANCHORS AT THE TIME STORM BARS ARE REMOVED. (SEE DET. A).

TABLE 5A

A.S.D. PRESSURE RATING (p.s.f.)	MAX. SLAT SPAN	"L" MAX. STORM BAR SPAN
80.0	3'-0"	9'-11"
	4'-0"	8'-8"
	5'-0"	6'-11"
100.0	3'-0"	9'-2"
	4'-0"	6'-11"
	5'-0"	5'-6"

SECTION S1 - S1

SCALE : N. T. S.

ELEVATION X

SCALE : N. T. S.

SECTION V - V

SINGLE SPAN SECTIONS AND DETAILS ARE SIMILAR TO ABOVE SHOWN WITHOUT STORM BAR & HEADERS.

FLORIDA BUILDING CODE. (High Velocity Hurricane Zone)

PRODUCT REVISED
as complying with the Florida Building Code
Acceptance No 13-0117.04
Expiration Date 07/06/2016
By
Miami Dade Product Control
MIAMI-DADE COUNTY

WALTER A. TILLIT JR. LICENSE No. 44167 STATE OF FLORIDA PROFESSIONAL ENGINEER

P.E. SEAL/SIGNATURE/DATE

©2012 TILTECO INC.

TILTECO INC.
TILLIT TESTING & ENGINEERING COMPANY
8355 N.W. 36th. St., Ste. 305 - VIRGINIA GARDENS, FL 33166
Phone : (305) 871-1530 , Fax : (305) 871-1531
e-mail: tilteco@aol.com
EB-0006719
WALTER A. TILLIT Jr., P.E.
FLORIDA Lic. # 44167

ASSA/60mm BERTHA ROLL-UP

EUROTEC, INC.
(ASSA MEMBER # 277)
8315 N.W. 74TH STREET
MIAMI, FL. 33166
PHONE:(305)406-0944, FAX:(305)406-0946

REV. No	DESCRIPTION	DATE	REV. No	DESCRIPTION	DATE
1	OLD 11-038	12/21/12	3		
2	SECTION S-S	6/3/09	4		

DRAWN BY: A.G.
DATE: 12/21/12
DRAWING No: 12-178
SHEET 5A OF 14

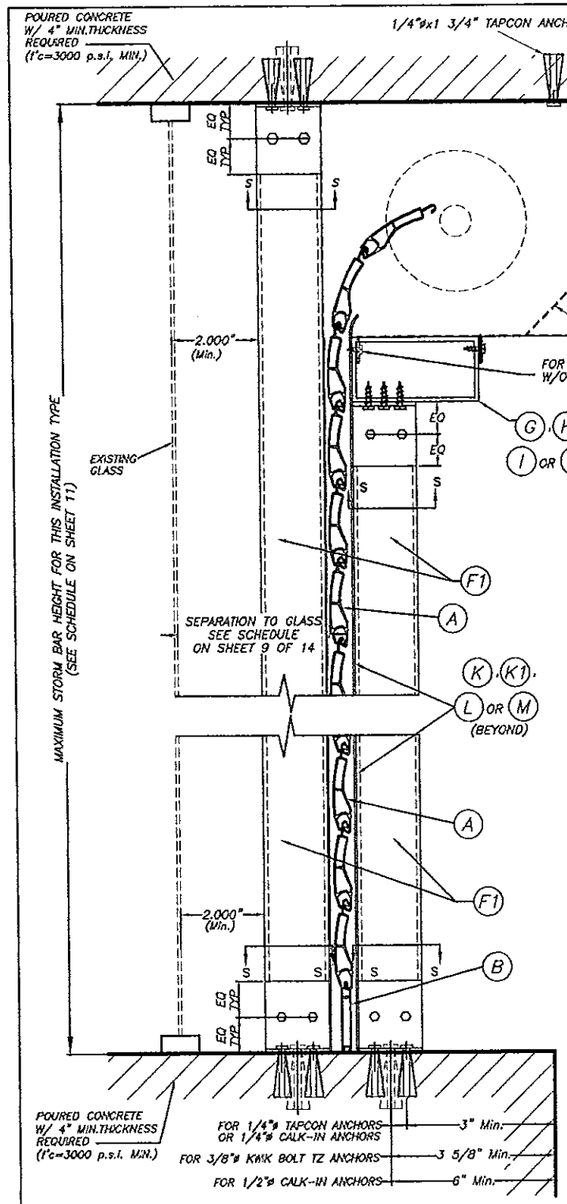

CEILING & FLOOR MOUNTING SECTION V-V(2) INSTALLATION W/ FIXED OR REMOVABLE STORM BARS W/CONCRETE ANCHORS

(SEE SECTION "S" FOR ANCHOR TYPE REQUIREMENT)

SCALE : N.T.S.

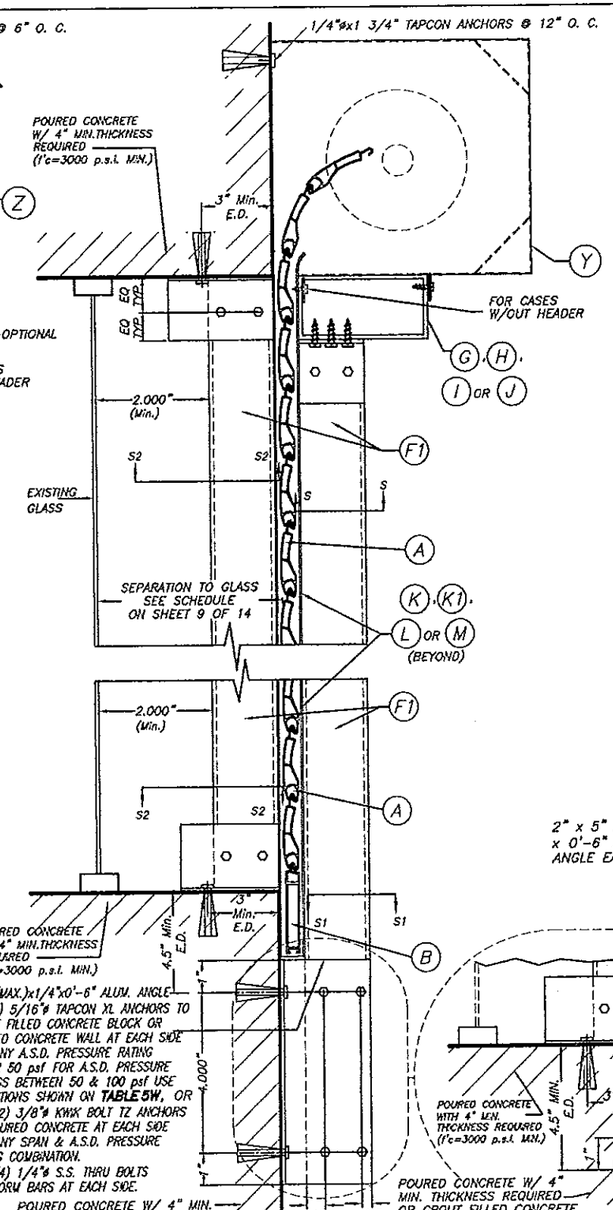

WALL MOUNTING SECTION V-V(1) INSTALLATION W/ FIXED STORM BARS W/ CONCRETE ANCHORS

SCALE : N.T.S.

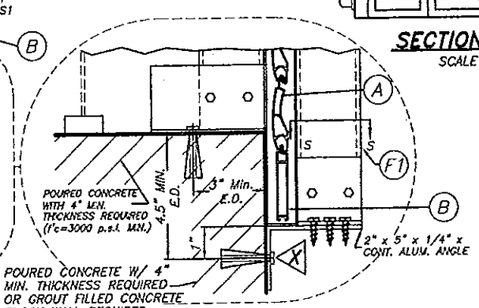

OPTIONAL STORM BAR CONNECTION

SCALE : N.T.S.

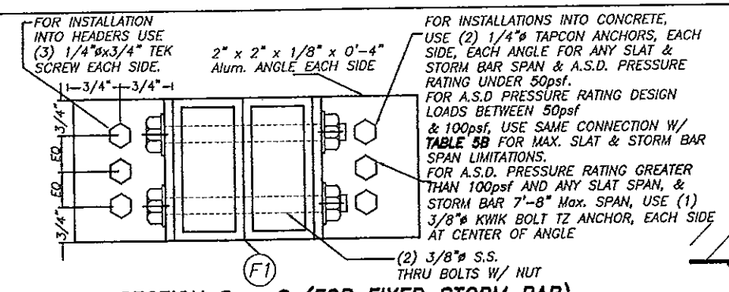

SECTION S - S (FOR FIXED STORM BAR)

SCALE : N.T.S.

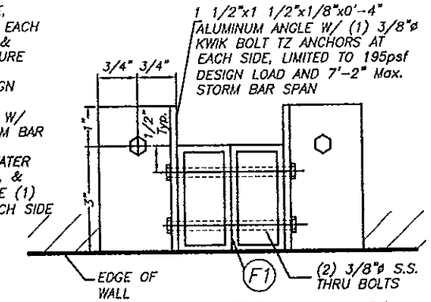

SECTION S2 - S2

SCALE : N.T.S.

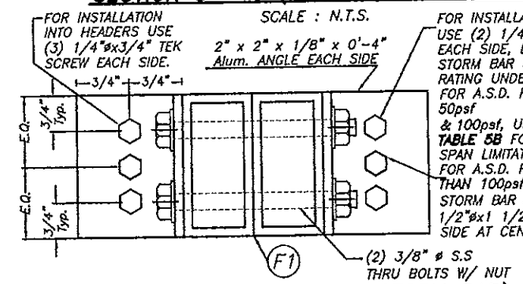

SECTION S - S (FOR REMOVABLE STORM BAR)

SCALE : N.T.S.

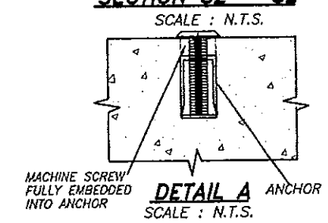

DETAIL A

SCALE : N.T.S.

*1/4"ø-20 OR 1/2"ø-13 MACHINE SCREWS USED JOINTLY W/ 1/4"øx7/8" OR 1/2"øx1 1/2" CALK-IN ANCHORS RESPECTIVELY SHALL BE LEFT TOGETHER W/ ANCHORS AT THE TIME STORM BARS ARE REMOVED. (SEE DET. A).

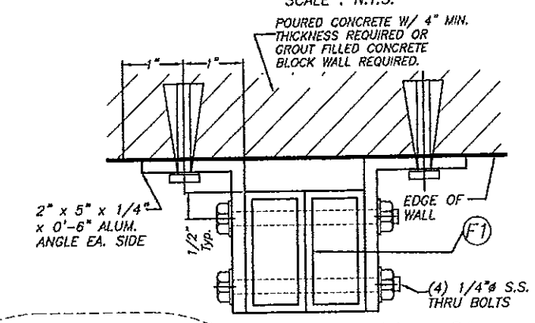

SECTION S1 - S1

SCALE : N.T.S.

TABLE 5W

A.S.D. PRESSURE RATING (p.s.f.)	MAX. SLAT SPAN	"L" MAX. STORM BAR SPAN
50.0	3'-0"	13'-4"
	4'-0"	10'-5"
	5'-0"	8'-4"
	6'-0"	6'-11"
60.0	3'-0"	11'-7"
	4'-0"	8'-8"
	5'-0"	6'-11"
80.0	3'-0"	8'-8"
	4'-0"	6'-6"
	5'-0"	5'-2"
100.0	3'-0"	6'-11"
	4'-0"	5'-2"
	5'-0"	4'-2"

TABLE 5B

A.S.D. PRESSURE RATING (p.s.f.)	MAX. SLAT SPAN	"L" MAX. STORM BAR SPAN
50.0	3'-0"	13'-4"
	4'-0"	12'-5"
	5'-0"	11'-1"
	6'-0"	9'-3"
60.0	3'-0"	12'-9"
	4'-0"	11'-7"
	5'-0"	9'-3"
80.0	3'-0"	11'-6"
	4'-0"	8'-8"
	5'-0"	6'-11"
100.0	3'-0"	9'-2"
	4'-0"	6'-11"
	5'-0"	5'-6"

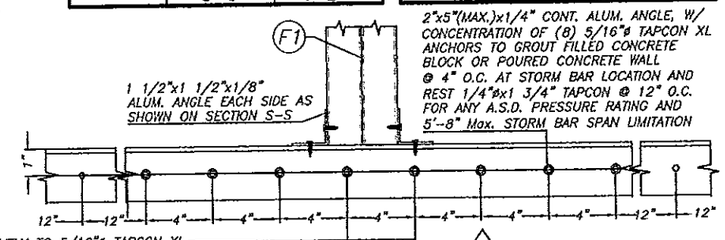

ELEVATION X

SCALE : N. T. S.

SECTION V - V

SINGLE SPAN SECTIONS AND DETAILS ARE SIMILAR TO ABOVE SHOWN WITHOUT STORM BAR & HEADERS.

FLORIDA BUILDING CODE. (High Velocity Hurricane Zone)

PRODUCT REVISED
as complying with the Florida Building Code
Acceptance No 13-0117.04
Expiration Date 07/06/2016
By Miami Dade Product Control
MIAMI-DADE COUNTY

WALTER A. TILLIT JR. LICENSE No. 44167 STATE OF FLORIDA PROFESSIONAL ENGINEER
SEAL/SIGNATURE/DATE

©2012 TILTECO INC.

TILTECO INC.
TILLIT TESTING & ENGINEERING COMPANY
5355 N.W. 36th. St., Ste. 305 – VIRGINIA GARDENS, FL 33166
Phone : (305) 871-1530 , Fax : (305) 871-1531
e-mail: tilteco@aol.com
EB-0006719
WALTER A. TILLIT Jr., P.E.
FLORIDA Lic. # 44167

ASSA/60mm BERTHA ROLL-UP

EUROTEC, INC.
(ASSA MEMBER # 277)
8315 N.W. 74TH STREET
MIAMI, FL. 33166
PHONE:(305)406-0944, FAX:(305)406-0946

REV. No	DESCRIPTION	DATE	REV. No	DESCRIPTION	DATE
1	OLD 11-056	12/21/12	3		
2	ELEVATION X	6/3/09	4		

DRAWN BY: A.G.
12/21/12 DATE
12-178 DRAWING No
SHEET 5B OF 14

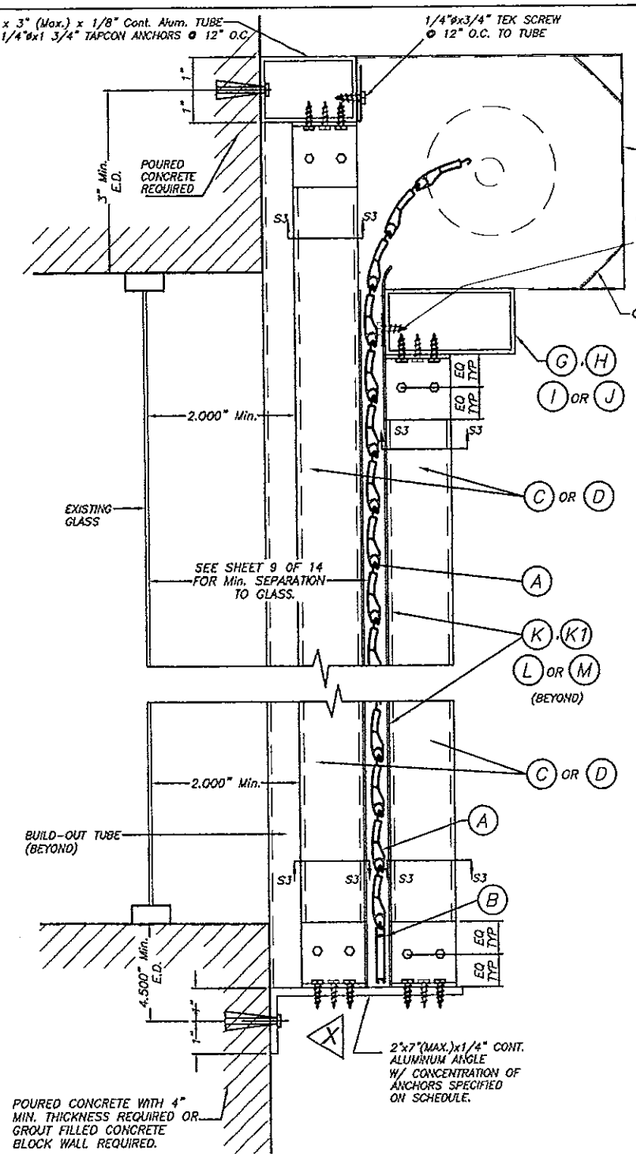

CASE I

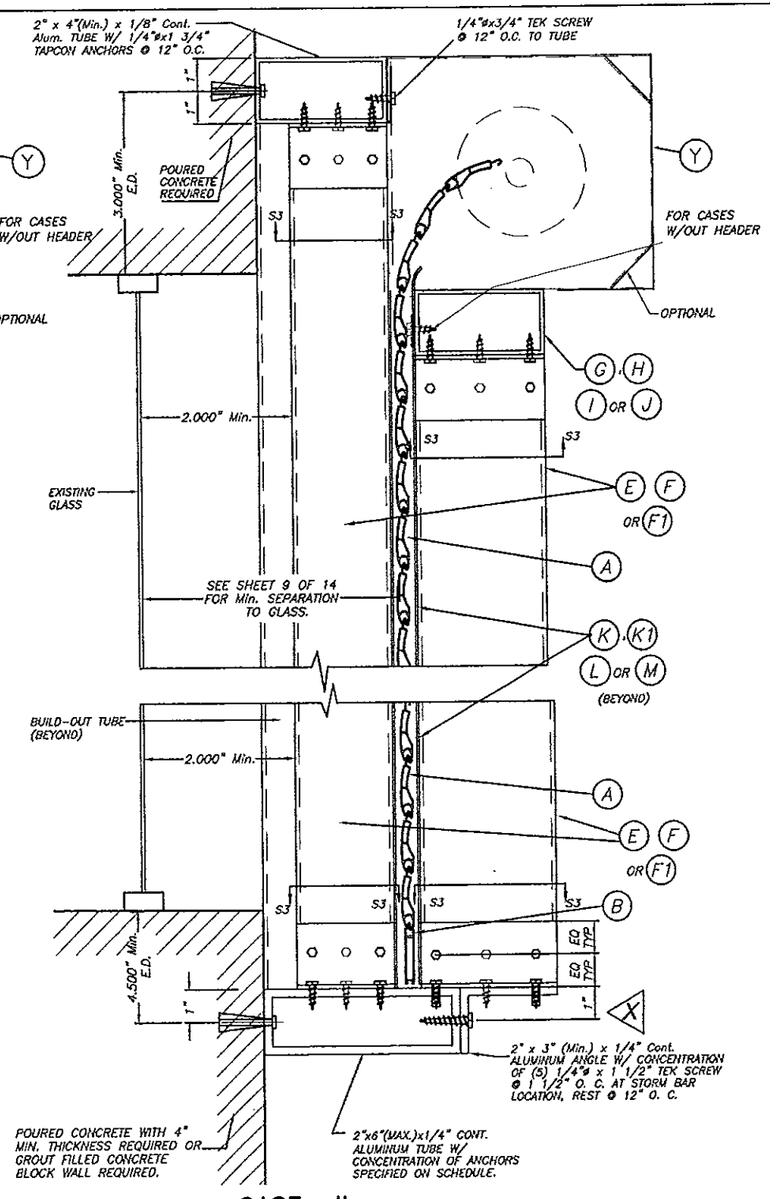

CASE II

FIXED STORM BAR CONNECTION AT BUILD-OUT INSTALLATIONS W/SHEET METAL SCREWS OR MACHINE SCREWS

SCALE : 1/4" = 1"

SECTION V – V(3)

SINGLE SPAN SECTIONS AND DETAILS ARE SIMILAR TO ABOVE SHOWN WITHOUT STORM BAR & HEADERS.

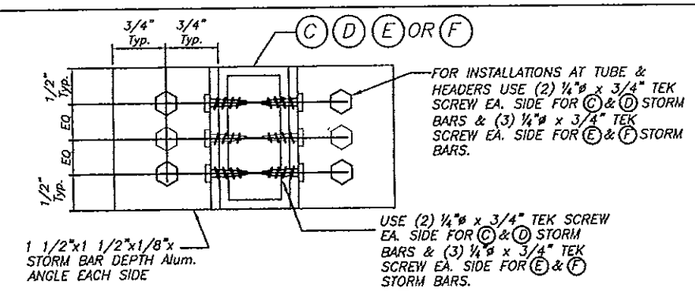

SECTION S3 – S3

SCALE : 1/2" = 1"

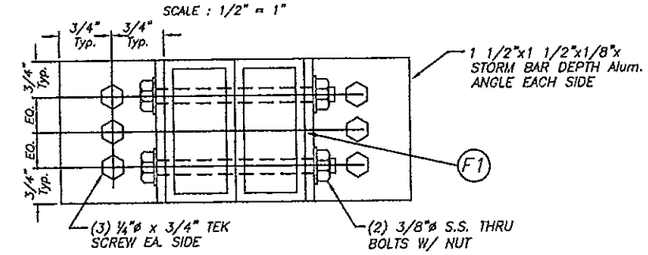

SECTION S3 – S3

SCALE : 1/2" = 1"

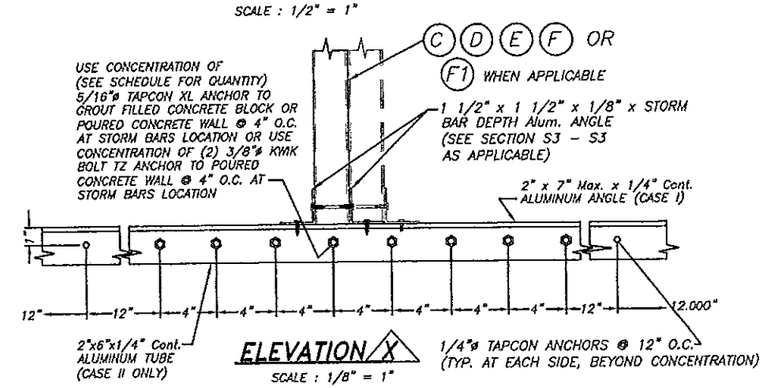

ELEVATION X

SCALE : 1/8" = 1"

ANCHORS & STORM BARS SCHEDULE FOR ELEVATION X	
ANCHOR TYPE & QUANTITY	STORM BAR TYPE
(6) 5/16" ø TAPCON XL	C, D
(8) 5/16" ø TAPCON XL	E, F
(8) 5/16" ø TAPCON XL	F1 *

LIMITED TO 195psf, 3'-1" SPACING & 7'-0" MAX. SPAN STORM BAR F1

FLORIDA BUILDING CODE. (High Velocity Hurricane Zone)

PRODUCT REVISED
as complying with the Florida Building Code
Acceptance No 13-0117.04
Expiration Date 07/06/2016
By [signature]
Miami Dade Product Control
MIAMI-DADE COUNTY

WALTER A. TILLIT JR. LICENSE No. 44167 STATE OF FLORIDA PROFESSIONAL ENGINEER
SEAL/SIGNATURE/DATE

©2012 TILTECO INC.

TILTECO INC.
TILLIT TESTING & ENGINEERING COMPANY
8355 N.W. 36th. St., Ste. 305 – VIRGINIA GARDENS, FL 33166
Phone : (305) 871-1530 , Fax : (305) 871-1531
e-mail: tilteco@aol.com
EB-0006719
WALTER A. TILLIT Jr., P.E.
FLORIDA Lic. # 44167

ASSA/60mm BERTHA ROLL-UP

EUROTEC, INC.
(ASSA MEMBER # 277)
8315 N.W. 74TH STREET
MIAMI, FL. 33166
PHONE:(305)406-0944, FAX:(305)406-0946

REV. No	DESCRIPTION	DATE	REV. No	DESCRIPTION	DATE
1	OLD 11-056	12/21/12	3		
2	ELEVATION X	6/3/03	4		

DRAWN BY: A.G.
DATE: 12/21/12
DRAWING No: 12-178
SHEET 6 OF 14

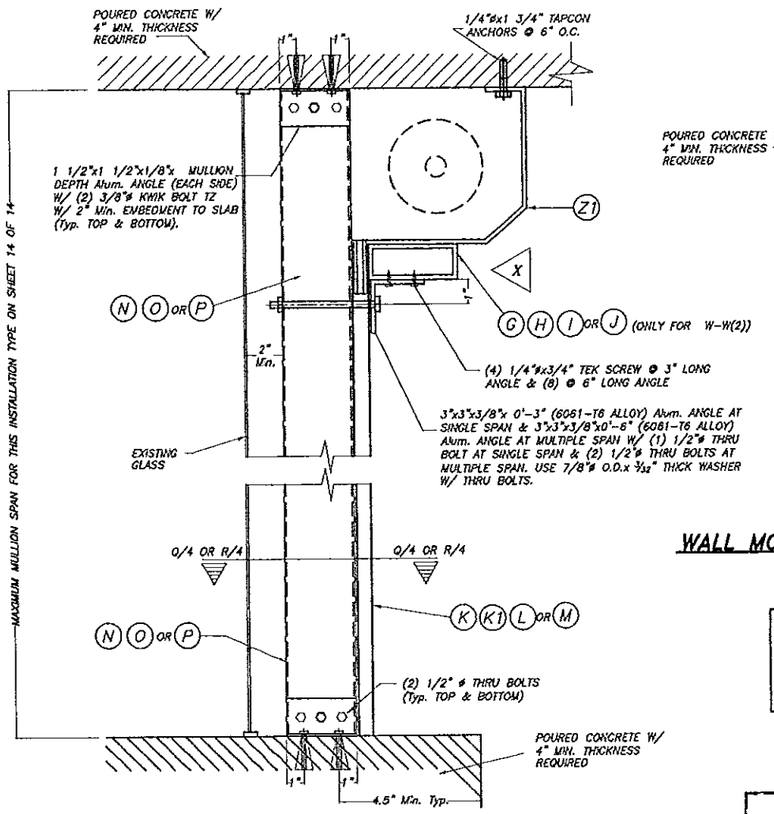

FLOOR/CEILING MOUNTING : SECTION W-W (1). W/O HEADER SECTION W-W (2). W/HEADER

SCALE : 1/8" = 1"

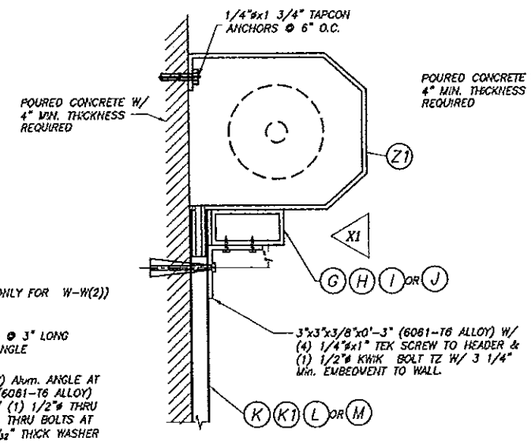

ALTERNATIVE: 1 WALL MOUNTING : SECTION W-W (3)

SCALE : 1/8" = 1"

NOTE:
THIS INSTALLATION IS ONLY VALID FOR STORM BARS WITH MAX. SPAN= 7'-0", HEADERS CON 12'-0" MAX. SINGLE SPAN & 80 p.s.f. MAXIMUM A.S.D. PRESSURE RATING, OR STORM BARS WITH MAX. SPAN = 6'-0", HEADERS WITH 15'-0" SINGLE 80 p.s.f. MAXIMUM A.S.D. PRESSURE RATING.

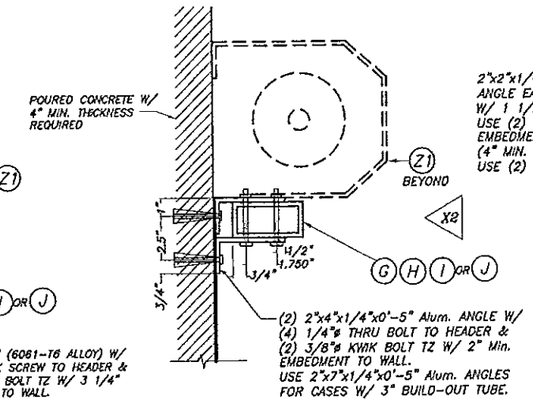

ALTERNATIVE: 2 WALL MOUNTING : SECTION W-W(3)

SCALE : 1/8" = 1"

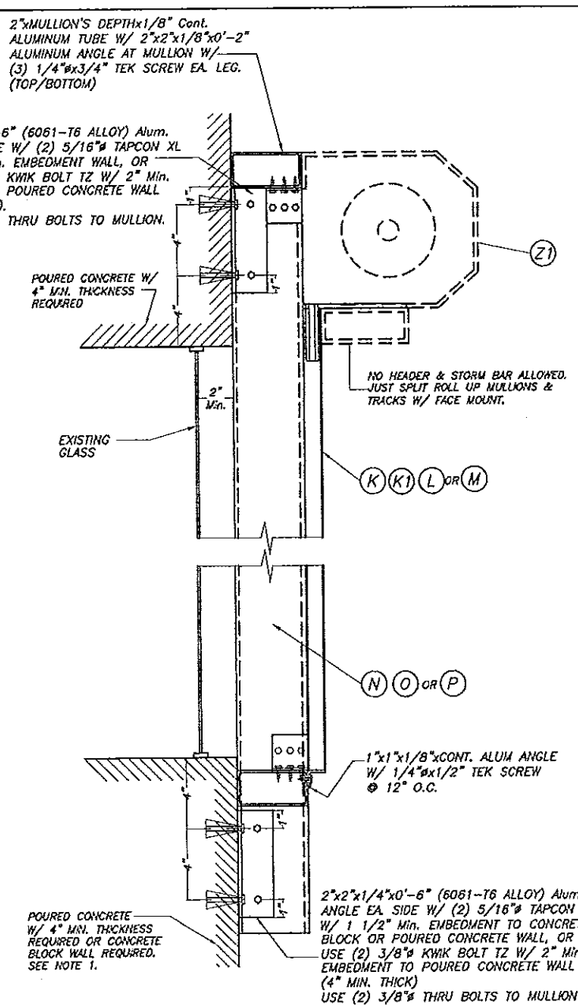

WALL MOUNTING : MULLION CONNECTION AT TOP & BOTTOM : SECTION W-W (1)

SCALE : 1/8" = 1"

NOTE 1:
EXISTING WALL MAY CONCRETE BLOCK FOR A.S.D. PRESSURE RATING UP TO 130.0 psf W/ 4'-0" Max. MULLION SPAN AND 4'-0" Max. MULLION SPACING AND SHALL BE 4" MIN. THICK POURED CONCRETE FOR ALL GREATER MULLION SPAN AND A.S.D. PRESSURE RATING COMBINATIONS.

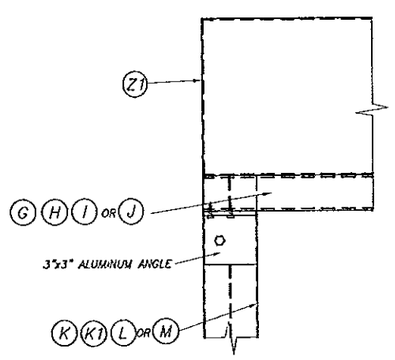

ELEVATION X1

SCALE : 1/8" = 1"

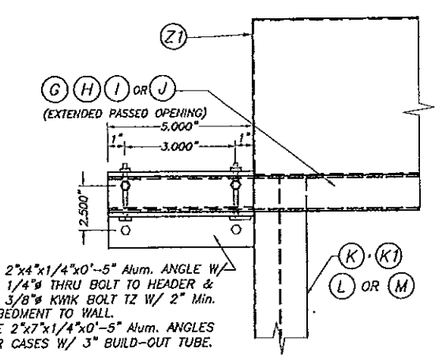

ELEVATION X2

SCALE : 1/8" = 1"

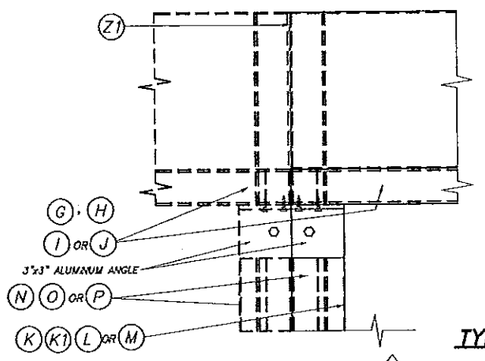

ELEVATION X

SCALE : 1/8" = 1"

TYPICAL HEADER CONNECTION AT ENDS: SECTION W-W

PRODUCT REVISED
as complying with the Florida Building Code
Acceptance No 13-0117.04
Expiration Date 07/06/2016
By
Miami Dade Product Control
MIAMI-DADE COUNTY

WALTER A. TILLIT JR. LICENSE No. 44167 STATE OF FLORIDA PROFESSIONAL ENGINEER
P.E. SEAL/SIGNATURE/DATE

©2012 TILTECO INC.

TILTECO INC.
TILLIT TESTING & ENGINEERING COMPANY
8355 N.W. 36th. St., Ste. 305 – VIRGINIA GARDENS, FL 33166
Phone : (305) 871-1530 , Fax : (305) 871-1531
e-mail: tilteco@aol.com
EB-0006719
WALTER A. TILLIT Jr., P.E.
FLORIDA Lic. # 44167

FLORIDA BUILDING CODE. (High Velocity Hurricane Zone)

ASSA/60mm BERTHA ROLL-UP

EUROTEC, INC.
(ASSA MEMBER # 277)
8315 N.W. 74TH STREET
MIAMI, FL. 33166
PHONE:(305)406-0944, FAX:(305)406-0946

REV. No	DESCRIPTION	DATE	REV. No	DESCRIPTION	DATE
1	OLD 11-056	12/21/12	3		
2			4		

DRAWN BY: A.G.
DATE: 12/21/12
DRAWING No: 12-178
SHEET 7 OF 14

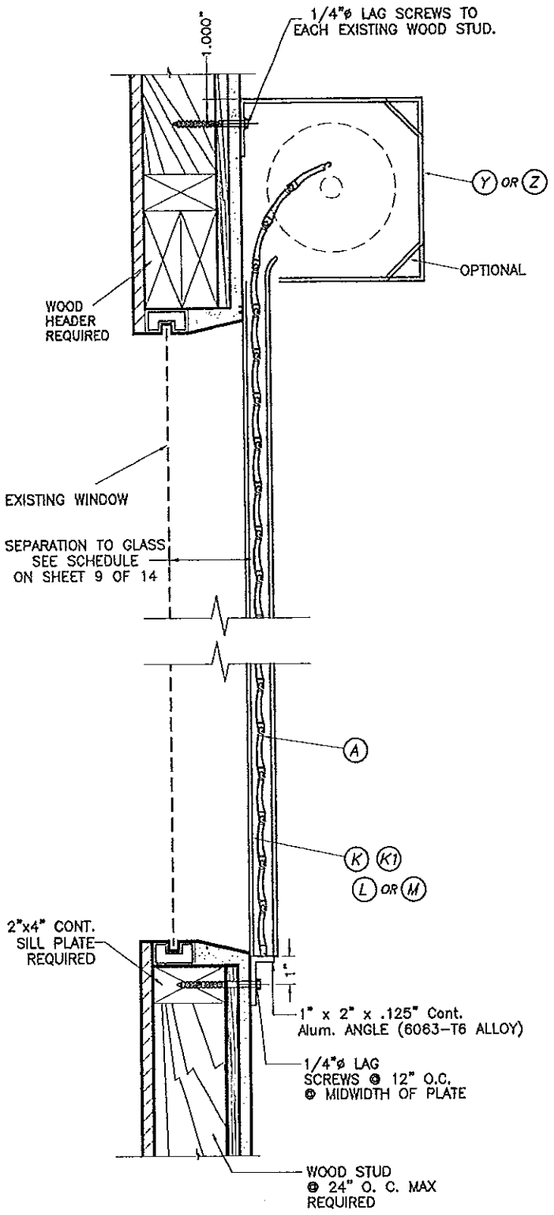

WALL MOUNTING INSTALLATION SINGLE SPAN CONDITION

N. T. S.

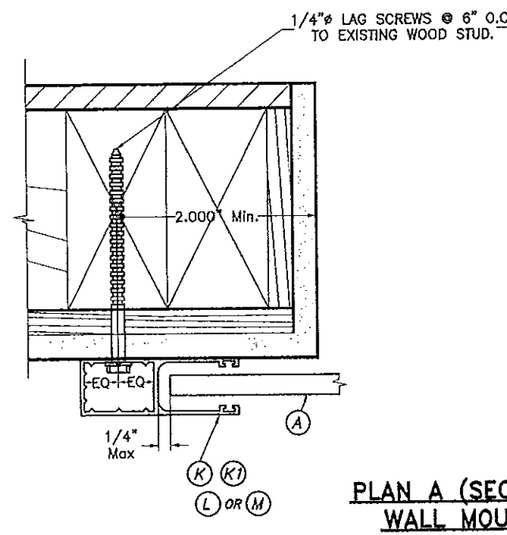

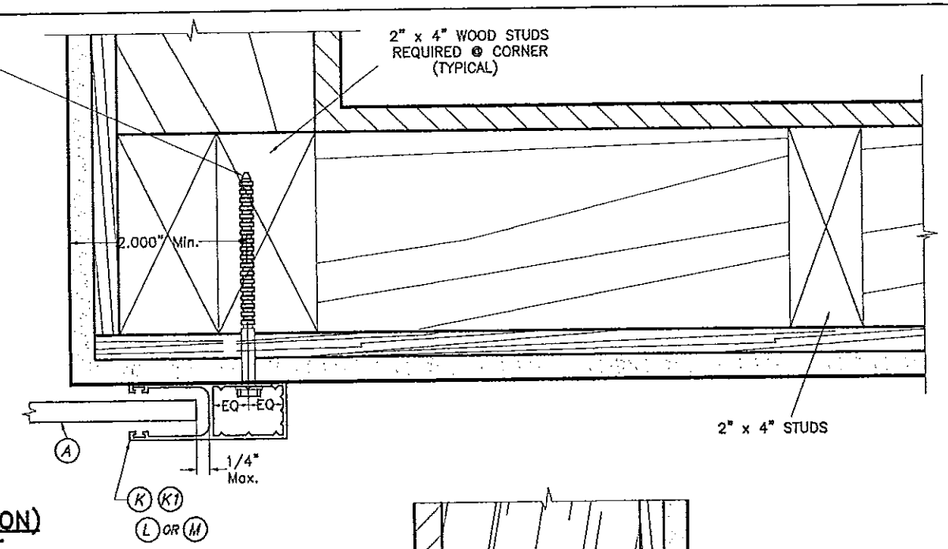

PLAN A (SECTION) WALL MOUNT

SCALE : 3/8" = 1"

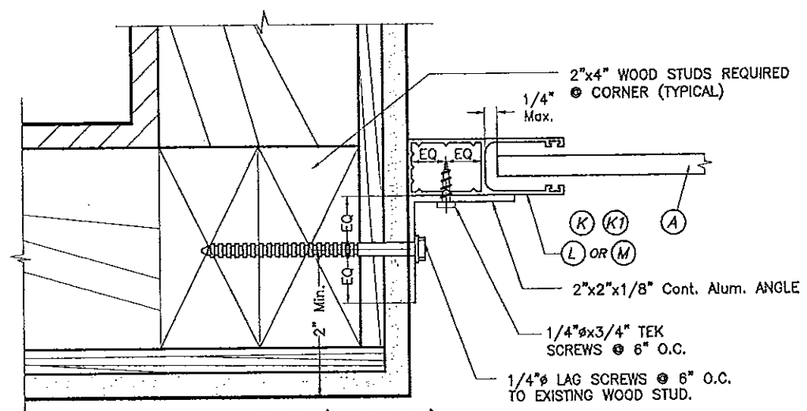

PLAN B (SECTION) INSIDE MOUNT

SCALE : 3/8" = 1"

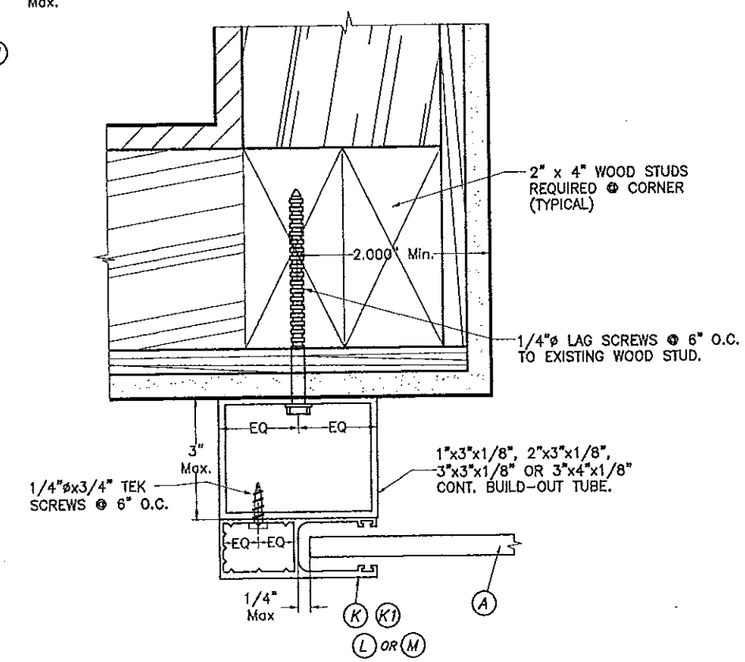

PLAN C (SECTION) BUILD-OUT

SCALE : 3/8" = 1"

NOTES:

1. INSTALLATIONS ARE ONLY VALID FOR BUILDINGS WITH A.S.D. PRESSURE RATING UP TO 75.0 psf.
2. FOR NEW FRAME CONSTRUCTION: WOOD MEMBER TO BE SOUTHERN PINE No. 2 W/ SPECIFIC DENSITY OF 0.55 OR EQUAL.
3. THIS APPROVAL INCLUDES INSTALLATION IN WOOD FOR SINGLE UNITS WITHOUT STORM BARS, MULLIONS & HEADERS AS SHOWN IN THIS SHEET.

FLORIDA BUILDING CODE. (High Velocity Hurricane Zone)

PRODUCT REVISED
as complying with the Florida Building Code
Acceptance No 13-0117.04
Expiration Date 07/06/2016
By
Miami Dade Product Control
MIAMI-DADE COUNTY

WALTER A. TILLIT JR. LICENSE No. 44167 STATE OF FLORIDA PROFESSIONAL ENGINEER
P.E. SEAL/SIGNATURE/DATE

©2012 TILTECO INC.

TILTECO INC.
TILLIT TESTING & ENGINEERING COMPANY
6355 N.W. 36th. St., Ste. 305 - VIRGINIA GARDENS, FL 33166
Phone : (305) 871-1530 , Fax : (305) 871-1531
e-mail: tilteco@aol.com
EB-0008719
WALTER A. TILLIT Jr., P.E.
FLORIDA Lic. # 44167

ASSA/60mm BERTHA ROLL-UP

EUROTEC, INC.
(ASSA MEMBER # 277)
8315 N.W. 74TH STREET
MIAMI, FL. 33166
PHONE:(305)406-0944, FAX:(305)406-0946

REV. No	DESCRIPTION	DATE	REV. No	DESCRIPTION	DATE
1	OLD 11-036	12/21/12	3		
2			4		

DRAWN BY: A.G.
DATE 12/21/12
DRAWING No 12-178
SHEET 8 OF 14

SLAT PERFORMANCE CHART MAXIMUM A.S.D. DESIGN PRESSURE RATING (psf) AND CORRESPONDING MAXIMUM SLAT SPAN "L" (ft) FOR TYPE 1 SLAT

(USE MAXIMUM VALUES BETWEEN POSITIVE AND NEGATIVE LOAD)

MAXIMUM A.S.D. DESIGN PRESSURE RATING (p.s.f.)	MAXIMUM SLAT SPAN "L" (ft)	MINIMUM SEPARATION TO GLASS (in)	
	SINGLE & MULTIPLE UNIT *	SINGLE & MULTIPLE UNIT **	SINGLE & MULTIPLE UNIT ***
40.0	6'-5"	4 3/8"	3 5/8"
45.0	6'-2"	4"	3 1/2"
50.0	5'-11"	4"	3 3/8"
55.0	5'-9"	4"	3 3/8"
60.0	5'-7"	4"	3 1/4"
65.0	5'-5"	4"	3 1/4"
70.0	5'-4'	4"	3 1/8"
75.0	5'-2"	4"	3 1/8"
80.0	5'-1"	4"	3"
85.0	5'-0"	4"	3"
90.0	4'-11"	4"	3"
95.0	4'-10"	4"	3"
100.0	4'-9"	4"	3"
105.0	4'-8"	4"	3"
110.0	4'-7"	4"	2 7/8"
115.0	4'-6"	2 7/8"	2 7/8"
120.0	4'-5"	2 7/8"	2 7/8"
125.0	4'-5"	2 7/8"	2 7/8"
130.0	4'-4"	2 3/4"	2 3/4"
135.0	4'-3"	2 3/4"	2 3/4"
140.0	4'-3"	2 3/4"	2 3/4"
145.0	4'-2"	2 3/4"	2 3/4"
150.0	4'-1"	2 3/4"	2 3/4"
155.0	4'-1"	2 3/4"	2 3/4"
160.0	4'-0"	2 5/8"	2 5/8"
165.0	4'-0"	2 5/8"	2 5/8"
170.0	3'-11"	2 5/8"	2 5/8"
175.0	3'-11"	2 5/8"	2 5/8"
180.0	3'-11"	2 5/8"	2 5/8"
185.0	3'-10"	2 5/8"	2 5/8"
190.0	3'-10"	2 5/8"	2 5/8"
195.0	3'-9"	2 1/2"	2 1/2"

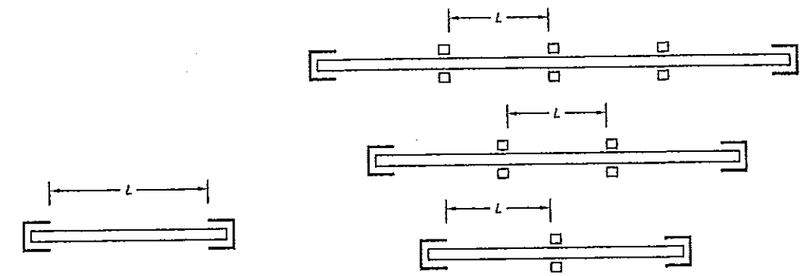

SINGLE SPAN

MULTIPLE SPAN

SPAN LAYOUT

* SPANS VALID FOR EVERY INSTALLATION LOCATED AT ANY ELEVATION OF BUILDING MEASURED AT BOTTOM OF SHUTTER. MINIMUM SEPARATION TO GLASS FOR SINGLE AND MULTIPLE UNITS SHALL BE MEASURED FROM BACK OF SLAT TO GLASS.

** MINIMUM SEPARATION TO GLASS FOR SHUTTERS INSTALLED WITHIN THE FIRST 30'-0" ELEVATION OF BUILDING AND MAXIMUM SPAN. SEE TABLE 1 FOR Min. SEPARATION TO GLASS FOR SPANS LESS THAN THE Max. ALLOWED.

*** MINIMUM SEPARATION TO GLASS FOR SHUTTERS INSTALLED ABOVE 30'-0" ELEVATION OF BUILDING, MEASURED AT BOTTOM OF SHUTTER.

TABLE 1:

SLAT SPAN (ft.)	MINIMUM SEPARATION TO GLASS
48" OR LESS	2 5/8"
> 48" TO 54"	2 7/8"
> 54" TO 74"	4"
> 74" TO 77"	4 3/8"

FLORIDA BUILDING CODE. (High Velocity Hurricane Zone)

PRODUCT REVISED
as complying with the Florida Building Code
Acceptance No 13-0117.04
Expiration Date 07/06/2018
By
Miami Dade Product Control
MIAMI-DADE COUNTY

WALTER A. TILLIT JR. LICENSE No. 44167 STATE OF FLORIDA PROFESSIONAL ENGINEER
P.E. SEAL/SIGNATURE/DATE

©2012 TILTECO INC.

TILTECO INC.
TILLIT TESTING & ENGINEERING COMPANY
6355 N.W. 36th. St., Ste. 305 – VIRGINIA GARDENS, FL 33166
Phone : (305) 871-1530 , Fax : (305) 871-1531
e-mail: tilteco@aol.com
EB-0006719
WALTER A. TILLIT Jr., P.E.
FLORIDA Lic. # 44167

ASSA/60mm BERTHA ROLL-UP

EUROTEC, INC.
(ASSA MEMBER # 277)
8315 N.W. 74TH STREET
MIAMI, FL. 33166
PHONE:(305)406-0944, FAX:(305)406-0946

REV. No	DESCRIPTION	DATE	REV. No	DESCRIPTION	DATE
1	OLD 11-064	12/21/12	3		
2			4		

DRAWN BY: A.G.
12/21/12 DATE
12-178 DRAWING No
SHEET 9 OF 14

STORM BAR LOADING CHART
MAXIMUM A.S.D. DESIGN PRESSURE RATING (p. s. f.) AND CORRESPONDING MAXIMUM SPAN "L" FOR A GIVEN TYPE OF STORM BAR AND STORM BAR SPACING.

(USE MAXIMUM VALUES BETWEEN POSITIVE AND NEGATIVE LOAD)

MAXIMUM A.S.D. DESIGN PRESSURE RATING (p.s.f.)	TYPE 1 STORM BAR 2" x 2" x 1/4" (C)					TYPE 2 STORM BAR 2" x 3" x 1/8" (D)					TYPE 3 STORM BAR 2" x 4" x 1/8" (E)				
	* STORM BAR SPACING					* STORM BAR SPACING					* STORM BAR SPACING				
	≤ 3'-0"	3' TO 4'	4' TO 5'	5' TO 6'	6' TO 6.5'	≤ 3'-0"	3' TO 4'	4' TO 5'	5' TO 6'	6' TO 6.5'	≤ 3'-0"	3' TO 4'	4' TO 5'	5' TO 6'	6' TO 6.5'
40 OR LESS	7'-7"	7'-1"	6'-9"	6'-2"	5'-11"	8'-0"	7'-9"	6'-11"	6'-4"	6'-1"	10'-0"	9'-6"	8'-6"	7'-9"	7'-5"
45	7'-5"	6'-11"	6'-4"	5'-10"	5'-7"	8'-0"	7'-4"	6'-7"	6'-0"	5'-9"	9'-11"	8'-11"	8'-0"	7'-4"	7'-0"
50	7'-3"	6'-9"	6'-0"	5'-6"	5'-4"	8'-0"	7'-0"	6'-3"	5'-8"	5'-6"	9'-8"	8'-6"	7'-7"	6'-11"	6'-8"
55	7'-0"	6'-5"	5'-9"	5'-3"	—	7'-8"	6'-8"	5'-6"	5'-6"	—	9'-4"	8'-1"	7'-3"	6'-7"	—
60	6'-11"	6'-2"	5'-6"	5'-0"	—	7'-4"	6'-4"	5'-8"	5'-2"	—	8'-11"	7'-9"	6'-11"	6'-4"	—
65	6'-9"	5'-11"	5'-4"	4'-10"	—	7'-1"	6'-1"	5'-5"	5'-0"	—	8'-7"	7'-5"	6'-8"	6'-1"	—
70	6'-7"	5'-8"	5'-1"	4'-8"	—	6'-10"	5'-11"	5'-3"	4'-10"	—	8'-3"	7'-2"	6'-5"	5'-10"	—
75	6'-4"	5'-6"	4'-11"	4'-6"	—	6'-7"	5'-8"	5'-1"	4'-8"	—	8'-0"	6'-11"	6'-2"	5'-8"	—
80	6'-2"	5'-4"	4'-9"	4'-4"	—	6'-4"	5'-6"	4'-11"	4'-6"	—	7'-9"	6'-9"	6'-0"	5'-6"	—
85	6'-0"	5'-2"	4'-8"	4'-3"	—	6'-2"	5'-4"	4'-9"	4'-4"	—	7'-6"	6'-6"	5'-10"	5'-4"	—
90	5'-10"	5'-0"	4'-6"	4'-1"	—	6'-0"	5'-2"	4'-8"	4'-3"	—	7'-4"	6'-4"	5'-8"	5'-2"	—
95	5'-8"	4'-11"	4'-5"	4'-0"	—	5'-10"	5'-1"	4'-6"	4'-1"	—	7'-1"	6'-2"	5'-6"	5'-0"	—
100	5'-6"	4'-9"	4'-3"	3'-11"	—	5'-8"	4'-11"	4'-5"	4'-0"	—	6'-11"	6'-0"	5'-4"	4'-11"	—
105	5'-5"	4'-8"	4'-2"	3'-10"	—	5'-7"	4'-10"	4'-4"	3'-11"	—	6'-9"	5'-10"	5'-3"	4'-9"	—
110	5'-3"	4'-7"	4'-1"	—	—	5'-5"	4'-8"	4'-2"	—	—	6'-7"	5'-9"	5'-1"	—	—
115	5'-2"	4'-5"	4'-0"	—	—	5'-4"	4'-7"	4'-1"	—	—	6'-6"	5'-7"	5'-0"	—	—
120	5'-0"	4'-4"	3'-11"	—	—	5'-2"	4'-6"	4'-0"	—	—	6'-4"	5'-6"	4'-11"	—	—
125	4'-11"	4'-3"	3'-10"	—	—	5'-1"	4'-5"	3'-11"	—	—	6'-2"	5'-4"	4'-10"	—	—
130	4'-10"	4'-2"	3'-9"	—	—	5'-0"	4'-4"	3'-10"	—	—	6'-1"	5'-3"	4'-9"	—	—
135	4'-9"	4'-1"	3'-8"	—	—	4'-11"	4'-3"	3'-9"	—	—	6'-0"	5'-2"	4'-7"	—	—
140	4'-8"	4'-0"	3'-7"	—	—	4'-10"	4'-2"	3'-9"	—	—	5'-10"	5'-1"	4'-6"	—	—
145	4'-7"	4'-0"	3'-7"	—	—	4'-9"	4'-1"	3'-8"	—	—	5'-9"	5'-0"	4'-6"	—	—
150	4'-6"	3'-11"	3'-6"	—	—	4'-8"	4'-0"	3'-7"	—	—	5'-8"	4'-11"	4'-5"	—	—
155	4'-5"	3'-10"	3'-5"	—	—	4'-7"	3'-11"	3'-6"	—	—	5'-7"	4'-10	4'-4"	—	—
160	4'-4"	3'-9"	3'-4"	—	—	4'-6"	3'-11"	3'-6"	—	—	5'-6"	4'-9"	4'-3"	—	—
165	4'-3"	3'-9"	3'-4"	—	—	4'-5"	3'-10"	3'-5"	—	—	5'-5"	4'-8"	4'-2"	—	—
170	4'-3"	3'-8"	—	—	—	4'-4"	3'-9"	—	—	—	5'-4"	4'-7"	—	—	—
175	4'-2"	3'-7"	—	—	—	4'-4"	3'-9"	—	—	—	5'-3"	4'-6"	—	—	—
180	4'-1"	3'-7"	—	—	—	4'-3"	3'-8"	—	—	—	5'-2"	4'-6"	—	—	—
185	4'-1"	3'-6"	—	—	—	4'-2"	3'-7"	—	—	—	5'-1"	4'-5"	—	—	—
190	4'-0"	3'-6"	—	—	—	4'-1"	3'-7"	—	—	—	5'-0"	4'-4"	—	—	—
195	3'-11"	3'-5"	—	—	—	4'-1"	3'-6"	—	—	—	5'-0"	4'-4"	—	—	—

* STORM BAR SPACING SHALL BE SUCH THAT MAXIMUM SLAT SPAN SHALL NOT BE EXCEEDED.

FLORIDA BUILDING CODE. (High Velocity Hurricane Zone)

PRODUCT REVISED
as complying with the Florida Building Code
Acceptance No 13-0117.04
Expiration Date 07/06/2016
By
Miami Dade Product Control
MIAMI-DADE COUNTY

WALTER A. TILLIT JR. LICENSE No. 44167 STATE OF FLORIDA PROFESSIONAL ENGINEER
P.E. SEAL/SIGNATURE/DATE

©2012 TILTECO INC.

TILTECO INC.
TILLIT TESTING & ENGINEERING COMPANY
6355 N.W. 36th. St., Sta. 305 - VIRGINIA GARDENS, FL 33166
Phone : (305) 871-1530 , Fax : (305) 871-1531
e-mail: tilteco@aol.com
EB-0006719
WALTER A. TILLIT Jr., P.E.
FLORIDA Lic. # 44167

ASSA/60mm BERTHA ROLL-UP

EUROTEC, INC.
(ASSA MEMBER # 277)
8315 N.W. 74TH STREET
MIAMI, FL. 33166
PHONE:(305)406-0944, FAX:(305)406-0946

REV. No	DESCRIPTION	DATE	REV. No	DESCRIPTION	DATE
1	OLD 11-058	12/21/12	3		
2			4		

DRAWN BY: A.G.
12/21/12 DATE
12-178 DRAWING No
SHEET 10 OF 14

STORM BAR LOADING CHART

MAXIMUM A.S.D. DESIGN PRESSURE RATING (p. s. f.) AND CORRESPONDING MAXIMUM SPAN "L" FOR A GIVEN TYPE OF STORM BAR AND STORM BAR SPACING.

(USE MAXIMUM VALUES BETWEEN POSITIVE AND NEGATIVE LOAD)

MAXIMUM A.S.D. DESIGN PRESSURE RATING (p.s.f.)	TYPE 4 STORM BAR 2" x 4" x .250" (F)					TYPE 5 STORM BAR (2) 2" x 4" x .250" (F1)				
	* STORM BAR SPACING					* STORM BAR SPACING				
	≤ 3'-0"	3' TO 4'	4' TO 5'	5' TO 6'	6' TO 6.5'	≤ 3'-0"	3' TO 4'	4' TO 5'	5' TO 6'	6' TO 6.5'
40 OR LESS	11'-10"	11'-0"	10'-5"	9'-11"	9'-9"	14'-1"	13'-1"	12'-5"	11'-10"	11'-7"
45	11'-6"	10'-8"	10'-1"	9'-8"	9'-4"	13'-8"	12'-9"	12'-0"	11'-6"	11'-3"
50	11'-2"	10'-5"	9'-10"	9'-2"	8'-10"	13'-4"	12'-5"	11'-9"	11'-2"	11'-0"
55	10'-11"	10'-2"	9'-7"	8'-9"	–	13'-0"	12'-1"	11'-5"	10'-11"	–
60	10'-8"	9'-11"	9'-2"	8'-5"	–	12'-9"	11'-10"	11'-2"	10'-8"	–
65	10'-6"	9'-9"	8'-10"	8'-1"	–	12'-6"	11'-7"	11'-0"	10'-6"	–
70	10'-4"	9'-6"	8'-6"	7'-9"	–	12'-3"	11'-5"	10'-9"	10'-4"	–
75	10'-1"	9'-2"	8'-3"	7'-6"	–	12'-0"	11'-2"	10'-7"	10'-1"	–
80	9'-11"	8'-11"	7'-11"	7'-3"	–	11'-10"	11'-0"	10'-5"	9'-11"	–
85	9'-10"	8'-7"	7'-9"	7'-0"	–	11'-8"	10'-10"	10'-3"	9'-10"	–
90	9'-8"	8'-5"	7'-6"	6'-10"	–	11'-6"	10'-8"	10'-1"	9'-8"	–
95	9'-5"	8'-2"	7'-4"	6'-8"	–	11'-4"	10'-7"	10'-0"	9'-5"	–
100	9'-2"	7'-11"	7'-1"	6'-6"	–	11'-2"	10'-5"	9'-10"	9'-2"	–
105	8'-11"	7'-9"	6'-11"	6'-4"	–	11'-1"	10'-4"	9'-9"	8'-11"	–
110	8'-9"	7'-7"	6'-9"	–	–	10'-11"	10'-2"	9'-7"	–	–
115	8'-7"	7'-5"	6'-8"	–	–	10'-10"	10'-1"	9'-4"	–	–
120	8'-5"	7'-3"	6'-6"	–	–	10'-8"	9'-11"	9'-2"	–	–
125	8'-3"	7'-1"	6'-4"	–	–	10'-7"	9'-10"	9'-0"	–	–
130	8'-1"	7'-0"	6'-3"	–	–	10'-6"	9'-9"	8'-10"	–	–
135	7'-11"	6'-10"	6'-1"	–	–	10'-5"	9'-8"	8'-8"	–	–
140	7'-9"	6'-9"	6'-0"	–	–	10'-4"	9'-6"	8'-6"	–	–
145	7'-7"	6'-7"	5'-11"	–	–	10'-2"	9'-4"	8'-4"	–	–
150	7'-6"	6'-6"	5'-10"	–	–	10'-1"	9'-2"	8'-2"	–	–
155	7'-4"	6'-5"	5'-9"	–	–	10'-0"	9'-0"	8'-1"	–	–
160	7'-3"	6'-3"	5'-7"	–	–	9'-11"	8'-11"	7'-11"	–	–
165	7'-2"	6'-2"	5'-6"	–	–	9'-11"	8'-9"	7'-10"	–	–
170	7'-0"	6'-1"	–	–	–	9'-10"	8'-7"	–	–	–
175	6'-11"	6'-0"	–	–	–	9'-9"	8'-6"	–	–	–
180	6'-10"	5'-11"	–	–	–	9'-8"	8'-4"	–	–	–
185	6'-9"	5'-10"	–	–	–	9'-6"	8'-3"	–	–	–
190	6'-8"	5'-9"	–	–	–	9'-5"	8'-2"	–	–	–
195	6'-7"	5'-8"	–	–	–	9'-3"	8'-0"	–	–	–

* STORM BAR SPACING SHALL BE SUCH THAT MAXIMUM SLAT SPAN SHALL NOT BE EXCEEDED.

FLORIDA BUILDING CODE. (High Velocity Hurricane Zone)

PRODUCT REVISED
as complying with the Florida Building Code
Acceptance No 13-0117.04
Expiration Date 07/06/2016
By
Miami Dade Product Control
MIAMI-DADE COUNTY

WALTER A. TILLIT JR. LICENSE No. 44167 STATE OF FLORIDA PROFESSIONAL ENGINEER
P.E. SEAL/SIGNATURE/DATE

©2012 TILTECO INC.

TILTECO INC.
TILLIT TESTING & ENGINEERING COMPANY
8355 N.W. 36th. St., Ste. 305 – VIRGINIA GARDENS, FL 33166
Phone : (305) 871-1530 , Fax : (305) 871-1531
e-mail: tilteco@aol.com
EB-0006719
WALTER A. TILLIT Jr., P.E.
FLORIDA Lic. # 44167

ASSA/60mm BERTHA ROLL-UP

EUROTEC, INC.
(ASSA MEMBER # 277)
8315 N.W. 74TH STREET
MIAMI, FL. 33166
PHONE:(305)406-0944, FAX:(305)406-0946

REV. No	DESCRIPTION	DATE	REV. No	DESCRIPTION	DATE
1	OLD 11-058	12/21/12	3		
2			4		

DRAWN BY: A.G.
12/21/12 DATE
12-178 DRAWING No
SHEET 11 OF 14

HEADER LOADING CHART MAXIMUM A.S.D. DESIGN PRESSURE RATING (psf) AND CORRESPONDING MAXIMUM SPAN "L" FOR A GIVEN TYPE OF HEADER.

(USE MAXIMUM VALUES BETWEEN POSITIVE AND NEGATIVE LOAD)

MAXIMUM A.S.D. DESIGN PRESSURE RATING (p.s.f.)	TYPE 1 HEADER (G) 2" x 3" x 1/8"		TYPE 2 HEADER (H) 2" x 4" x 1/8"			TYPE 3 HEADER (I) 2" x 4" x 1/4"					TYPE 4 HEADER (J) 2" x 6" x 1/8"				
	STORM BAR HEIGHT		STORM BAR HEIGHT			STORM BAR HEIGHT					STORM BAR HEIGHT				
	⩽ 5'-0"	5' TO 7'	⩽ 5'-0"	5' TO 8'	8' TO 10'	⩽ 6'-0"	6' TO 8'	8' TO 10'	10' TO 12'	12' TO 14'	⩽ 6'-0"	6' TO 8'	8' TO 10'	10' TO 12'	12' TO 14'
40.0 OR LESS	9'-11"	8'-4"	12'-2"	9'-8"	8'-8"	14'-10"	12'-10"	11'-6"	10'-6"	9'-9"	15'-1"	13'-1"	11'-8"	10'-8"	9'-11"
45.0	9'-4"	7'-11"	11'-6"	9'-1"	8'-2"	14'-0"	12'-2"	10'-10"	9'-11"	9'-2"	14'-3"	12'-4"	11'-0"	10'-1"	9'-4"
50.0	8'-10"	7'-6"	10'-11"	8'-8"	7'-9"	13'-4"	11'-6"	10'-4"	9'-5"	8'-8"	13'-6"	11'-8"	10'-6"	9'-7"	8'-10"
55.0	8'-5"	7'-2"	10'-5"	8'-3"	7'-4"	12'-8"	11'-0"	9'-10"	9'-0"	8'-4"	12'-11"	11'-2"	10'-0"	9'-1"	8'-5"
60.0	8'-1"	6'-10"	10'-0"	7'-11"	7'-1"	12'-2"	10'-6"	9'-5"	9'-7"	7'-11"	12'-4"	10'-8"	9'-7"	8'-9"	8'-1"
65.0	7'-9"	6'-7"	9'-7"	7'-7"	6'-9"	11'-8"	10'-1"	9'-0"	8'-3"	7'-8"	11'-10"	10'-3"	9'-2"	8'-5"	7'-9"
70.0	7'-6"	6'-4"	9'-3"	7'-4"	6'-6"	11'-3"	9'-9"	8'-8"	7'-11"	7'-4"	11'-5"	9'-11"	8'-10"	8'-1"	7'-6"
75.0	7'-3"	6'-1"	8'-11"	7'-1"	6'-4"	10'-10"	9'-5"	8'-5"	7'-8"	7'-1"	11'-0"	9'-7"	8'-7"	7'-10"	7'-3"
80.0	7'-0"	5'-11"	8'-8"	6'-10"	6'-1"	10'-6"	9'-1"	8'-2"	7'-5"	6'-11"	10'-8"	9'-3"	8'-3"	7'-7"	7'-0"
85.0	6'-9"	5'-9"	8'-5"	6'-7"	5'-11"	10'-2"	8'-10"	7'-11"	7'-3"	6'-8"	10'-4"	9'-0"	8'-0"	7'-4"	6'-9"
90.0	6'-7"	5'-7"	8'-2"	6'-5"	5'-9"	9'-11"	8'-7"	7'-8"	7'-0"	6'-6"	10'-1"	8'-9"	7'-10"	7'-1"	6'-7"
95.0	6'-5"	5'-5"	7'-11"	6'-3"	5'-7"	9'-8"	8'-4"	7'-6"	6'-10"	6'-4"	9'-10"	8'-6"	7'-7"	6'-11"	6'-5"
100.0	6'-3"	5'-3"	7'-9"	6'-1"	5'-6"	9'-5"	8'-2"	7'-3"	6'-8"	6'-2"	9'-7"	8'-3"	7'-5"	6'-9"	6'-3"
105.0	6'-1"	5'-2"	7'-6"	6'-0"	5'-4"	9'-2"	7'-11"	7'-1"	6'-6"	6'-0"	9'-4"	8'-1"	7'-3"	6'-7"	6'-1"
110.0	6'-0"	5'-1"	7'-4"	5'-10"	5'-2"	9'-0"	7'-9"	6'-11"	6'-4"	5'-10"	9'-1"	7'-11"	7'-1"	6'-5"	6'-0"
115.0	5'-10"	4'-11"	7'-2"	5'-8"	5'-1"	8'-9"	7'-7"	6'-9"	6'-2"	5'-9"	8'-11"	7'-9"	6'-11"	6'-4"	5'-10"
120.0	5'-9"	4'-10"	7'-1"	5'-7"	5'-0"	8'-7"	7'-5"	6'-8"	6'-1"	5'-7"	8'-9"	7'-7"	6'-9"	6'-2"	5'-9"
125.0	5'-7"	4'-9"	6'-11"	5'-6"	4'-11"	8'-5"	7'-3"	6'-6"	5'-11"	5'-6"	8'-7"	7'-5"	6'-7"	6'-1"	5'-7"
130.0	5'-6"	4'-8"	6'-9"	5'-4	4'-9"	8'-3"	7'-2"	6'-5"	5'-10"	5'-5"	8'-5"	7'-3"	6'-6"	5'-11"	5'-6"
135.0	5'-5"	4'-7"	6'-8"	5'-3"	4'-8"	8'-1"	7'-0"	6'-3"	5'-9"	5'-4"	8'-3"	7'-1"	6'-4"	5'-10"	5'-5"

FLORIDA BUILDING CODE. (High Velocity Hurricane Zone)

PRODUCT REVISED
as complying with the Florida
Building Code
Acceptance No 13-0117.04
Expiration Date 07/06/2016
By
Miami Dade Product Control
MIAMI-DADE COUNTY

WALTER A. TILLIT JR. LICENSE No 44167 STATE OF FLORIDA PROFESSIONAL ENGINEER
P.E. SEAL/SIGNATURE/DATE

©2012 TILTECO INC.

TILTECO INC.
TILLIT TESTING & ENGINEERING COMPANY
8355 N.W. 36th. St., Ste. 305 – VIRGINIA GARDENS, FL 33166
Phone : (305) 871-1530 , Fax : (305) 871-1531
e-mail: tilteco@aol.com
EB-0006719
WALTER A. TILLIT Jr., P.E.
FLORIDA Lic. # 44167

ASSA/60mm BERTHA ROLL-UP

EUROTEC, INC.
(ASSA MEMBER # 277)
8315 N.W. 74TH STREET
MIAMI, FL. 33166
PHONE:(305)406-0944, FAX:(305)406-0946

REV. No	DESCRIPTION	DATE	REV. No	DESCRIPTION	DATE
1	OLD 11-054	12/21/12	3		
2			4		

DRAWN BY: A.G.
12/21/12 DATE
12-178 DRAWING No
SHEET 12 OF 14

HEADER LOADING CHART MAXIMUM A.S.D. DESIGN PRESSURE RATING (psf) AND CORRESPONDING MAXIMUM SPAN "L" FOR A GIVEN TYPE OF HEADER.

(USE MAXIMUM VALUES BETWEEN POSITIVE AND NEGATIVE LOAD)

MAXIMUM A.S.D. DESIGN PRESSURE RATING (p.s.f.)	TYPE 1 HEADER (G) 2" x 3" x 1/8"		TYPE 2 HEADER (H) 2" x 4" x 1/8"			TYPE 3 HEADER (I) 2" x 4" x 1/4"					TYPE 4 HEADER (J) 2" x 6" x 1/8"				
	STORM BAR HEIGHT		STORM BAR HEIGHT			STORM BAR HEIGHT					STORM BAR HEIGHT				
	⩽ 5'-0"	5' TO 7'	⩽ 5'-0"	5' TO 8'	8' TO 10'	⩽ 6'-0"	6' TO 8'	8' TO 10'	10' TO 12'	12' TO 14'	⩽ 6'-0"	6' TO 8'	8' TO 10'	10' TO 12'	12' TO 14'
140.0	5'-3"	4'-6"	6'-6"	5'-2"	4'-7"	7'-11"	6'-11"	6'-2"	5'-7"	5'-2"	8'-1"	7'-0"	6'-3"	5'-9"	5'-3"
145.0	5'-2"	4'-5"	6'-5"	5'-1"	4'-6"	7'-10"	6'-9"	6'-1"	5'-6"	5'-1"	7'-11"	6'-10"	6'-2"	5'-7"	5'-2"
150.0	5'-1"	4'-4"	6'-4"	5'-0"	4'-6"	7'-8"	6'-8"	5'-11"	5'-5"	5'-0"	7'-10"	6'-9"	6'-1"	5'-6"	5'-1"
155.0	5'-0"	4'-3"	6'-2"	4'-11"	4'-5"	7'-7"	6'-6"	5'-10"	5'-4"	4'-11"	7'-8"	6'-8"	5'-11"	5'-5"	5'-0"
160.0	4'-11"	4'-2"	6'-1"	4'-10"	4'-4"	7'-5"	6'-5"	5'-9"	5'-3"	4'-10"	7'-7"	6'-6"	5'-10"	5'-4"	4'-11"
165.0	4'-10"	4'-1"	6'-0"	4'-9"	4'-3"	7'-4"	6'-4"	5'-8"	5'-2"	4'-10"	7'-5"	6'-5"	5'-9"	5'-3"	4'-10"
170.0	4'-10"	4'-1"	5'-11"	4'-8"	4'-2"	7'-3"	6'-3"	5'-7"	5'-1"	4'-9"	7'-4"	6'-4"	5'-8"	5'-2"	4'-10"
175.0	4'-9"	4'-0"	5'-10"	4'-7"	4'-2"	7'-1"	6'-2"	5'-6"	5'-0"	4'-8"	7'-3"	6'-3"	5'-7"	5'-1"	4'-9"
180.0	4'-8"	3'-11"	5'-9"	4'-7"	4'-1"	7'-0"	6'-1"	5'-5"	4'-11"	4'-7"	7'-1"	6'-2"	5'-6"	5'-0"	4'-8"
185.0	4'-7"	3'-11"	5'-8"	4'-6"	4'-0"	6'-11"	6'-0"	5'-4"	4'-11"	4'-6"	7-'0"	6'-1"	5'-5"	5'-0"	4'-7"
190.0	4'-6"	3'-10"	5'-7"	4'-5"	4'-0"	6'-10"	5'-11"	5'-3"	4'-10"	4'-6"	6'-11"	6'-0"	5'-4"	4'-11"	4'-6"
195.0	4'-6"	3'-9"	5'-6"	4'-4"	3'-11"	6'-9"	5'-10"	5'-3"	4'-9"	4'-5"	6'-10"	5'-11"	5'-4"	4'-10"	4'-6"

FLORIDA BUILDING CODE. (High Velocity Hurricane Zone)

PRODUCT REVISED
as complying with the Florida
Building Code
Acceptance No 13-0117.04
Expiration Date 07/06/2016
By
Miami Dade Product Control
MIAMI-DADE COUNTY

WALTER A. TILLIT JR.
LICENSE
No. 44167
STATE OF FLORIDA
PROFESSIONAL ENGINEER
P.E. SEAL/SIGNATURE/DATE

©2012 TILTECO INC.

TILTECO INC.
TILLIT TESTING & ENGINEERING COMPANY
6355 N.W. 36th. St., Ste. 305 - VIRGINIA GARDENS, FL 33166
Phone : (305) 871-1530 , Fax : (305) 871-1531
e-mail: tilteco@aol.com
EB-0006719
WALTER A. TILLIT Jr., P.E.
FLORIDA Lic. # 44167

ASSA/60mm BERTHA ROLL-UP

EUROTEC, INC.
(ASSA MEMBER # 277)
8315 N.W. 74TH STREET
MIAMI, FL. 33166
PHONE:(305)406-0944, FAX:(305)406-0946

REV. No	DESCRIPTION	DATE	REV. No	DESCRIPTION	DATE
1	OLD 11-055	12/21/12	3		
2			4		

DRAWN BY: A.G.
DATE: 12/21/12
DRAWING No: 12-178
SHEET 13 OF 14

MULLION LOADING CHART MAXIMUM A.S.D. DESIGN PRESSURE RATING (psf) AND CORRESPONDING MAXIMUM SPAN "L"(Ft) FOR A GIVEN TYPE OF MULLION AND MULLION SPACING (Ft.).

(USE MAXIMUM VALUES BETWEEN POSITIVE AND NEGATIVE LOAD)

MAXIMUM A.S.D. DESIGN PRESSURE RATING (p.s.f.)	TYPE 1 MULLION (N) 3" x 4" x 1/8"				TYPE 2 MULLION (O) 4" x 4" x 1/4"				TYPE 3 MULLION (P) 4" x 6" x 1/4"					
	MULLION SPACING				MULLION SPACING				MULLION SPACING					
	≤ 4'-0"	4' TO 5'	5' TO 6'	6' TO 8'	≤ 4'-0"	4' TO 5'	5' TO 6'	6' TO 8'	≤ 4'-0"	4' TO 5'	5' TO 6'	6' TO 8'	8' TO 10'	10' TO 12'
40.0 OR LESS	9'-0"	8'-4"	7'-10"	8'-2"	11'-9"	10'-11"	10'-3"	10'-9"	16'-4"	15'-2"	14'-3"	14'-10"	13'-10"	13'-0"
45.0	8'-8"	8'-0"	7'-7"	7'-10"	11'-4"	10'-6"	9'-11"	10'-4"	15'-8"	14'-7"	13'-8"	14'-4"	13'-3"	12'-6"
50.0	8'-4"	7'-9"	7'-3"	7'-7"	10'-11"	10'-2"	9'-7"	10'-0"	15'-2"	14'-1"	13'-3"	13'-10"	12'-10"	12'-1"
55.0	8'-1"	7'-6"	7'-1"	7'-4"	10'-7"	9'-10"	9'-3"	9'-8"	14'-8"	13'-7"	12'-10"	13'-4"	12'-5"	11'-8"
60.0	7'-10"	7'-3"	6'-10"	7'-2"	10'-3"	9'-7"	9'-0"	9'-5"	14'-3"	13'-3"	12'-5"	13'-0"	12'-1"	11'-4"
65.0	7'-8"	7'-1"	6'-8"	7'-0"	10'-0"	9'-4"	8'-9"	9'-2"	13'-11"	12'-11"	12'-2"	12'-8"	11'-9"	11'-1"
70.0	7'-5"	6'-11"	6'-6"	6'-10"	9'-9"	9'-1"	8'-6"	8'-11"	13'-7"	12'-7"	11'-10"	12'-4"	11'-5"	10'-9"
75.0	7'-3"	6'-9"	6'-4"	6'-8"	9'-7"	8'-10"	8'-4"	8'-8"	13'-3"	12'-3"	11'-7"	12'-1"	11'-2"	10'-6"
80.0	7'-2"	6'-7"	6'-3"	6'-6"	9'-4"	8'-8"	8'-2"	8'-6"	12'-11"	12'-0"	11'-4"	11'-10"	10'-11"	10'-4"
85.0	7'-0"	6'-6"	6'-1"	6'-4"	9'-2"	8'-6"	8'-0"	8'-4"	12'-8"	11'-9"	11'-1"	11'-7"	10'-9"	10'-1"
90.0	6'-10"	6'-4"	6'-0"	6'-3"	9'-0"	8'-4"	7'-10"	8'-2"	12'-5"	11'-7"	10'-11"	11'-4"	10'-6"	9'-11"
95.0	6'-9"	6'-3"	5'-10"	6'-2"	8'-10"	8'-2"	7'-9"	8'-1"	12'-3"	11'-4"	10'-8"	11'-2"	10'-4"	9'-9"
100.0	6'-7"	6'-2"	5'-9"	6'-0"	8'-8"	8'-1"	7'-7"	7'-11"	12'-0"	11'-2"	10'-6"	10'-11"	10'-2"	9'-7"
105.0	6'-6"	6'-1"	5'-7"	5'-11"	8'-6"	7'-11"	7'-6"	7'-9"	11'-10"	11'-0"	10'-4"	10'-9"	—	—
110.0	6'-5"	5'-11"	5'-5"	5'-10"	8'-5"	7'-10"	7'-4"	7'-8"	11'-8"	10'-10"	10'-2"	10'-7"	—	—
115.0	6'-4"	5'-10"	5'-4"	5'-8"	8'-3"	7'-8"	7'-3"	7'-7"	11'-6"	10'-8"	10'-0"	10'-5"	—	—
120.0	6'-3"	5'-9"	5'-3"	5'-7"	8'-2"	7'-7"	7'-2"	7'-5"	11'-4"	10'-6"	9'-11"	10'-4"	—	—
125.0	6'-2"	5'-7"	5'-1"	5'-5"	8'-1"	7'-6"	7'-0"	7'-4"	11'-2"	10'-4"	9'-9"	10'-2"	—	—
130.0	6'-1"	5'-6"	5'-0"	5'-4"	7'-11"	7'-5"	6'-11"	7'-3"	11'-0"	10'-3"	9'-8"	10'-0"	—	—
135.0	6'-0"	5'-5"	4'-11"	5'-3"	7'-10"	7'-3"	6'-10"	7'-2"	10'-11"	10'-1"	9'-6"	9'-11"	—	—
140.0	5'-11"	5'-3"	4'-10"	5'-2"	7'-9"	7'-2"	6'-9"	7'-1"	10'-9"	10'-0"	9'-5"	9'-10"	—	—
145.0	5'-10"	5'-2"	4'-9"	5'-1"	7'-8"	7'-1"	6'-8"	7'-0"	10'-7"	9'-10"	9'-3"	9'-8"	—	—
150.0	5'-9"	5'-1"	4'-8"	5'-0"	7'-7"	7'-0"	6'-7"	6'-11"	10'-6"	9'-9"	9'-2"	9'-7"	—	—
155.0	5'-7"	5'-0"	4'-7"	4'-11"	7'-6"	7'-0"	6'-7"	6'-10"	10'-5"	9'-8"	9'-1"	9'-6"	—	—
160.0	5'-6"	4'-11"	4'-6"	4'-10"	7'-5"	6'-11"	6'-6"	6'-9"	10'-3"	9'-7"	9'-0"	9'-4"	—	—
165.0	5'-5"	4'-10"	4'-5"	4'-9"	7'-4"	6'-10"	6'-5"	6'-8"	10'-2"	9'-5"	8'-10"	9'-3"	—	—
170.0	5'-4"	4'-10"	4'-5"	4'-8"	7'-3"	6'-9"	6'-4"	6'-8"	10'-1"	9'-4"	8'-9"	9'-2"	—	—
175.0	5'-3"	4'-9"	4'-4"	4'-7"	7'-2"	6'-8"	6'-4"	6'-7"	10'-0"	9'-3"	8'-7"	9'-1"	—	—
180.0	5'-3"	4'-8"	4'-3"	4'-6"	7'-2"	6'-7"	6'-3"	6'-6"	9'-11"	9'-2"	8'-6"	9'-0"	—	—
185.0	5'-2"	4'-7"	4'-2"	4'-6"	7'-1"	6'-7"	6'-2"	6'-5"	9'-10"	9'-1"	8'-4"	8'-11"	—	—
190.0	5'-1"	4'-6"	4'-2"	4'-5"	7'-0"	6'-6"	6'-1"	6'-5"	9'-9"	9'-0"	8'-3"	8'-9"	—	—
195.0	5'-0"	4'-6"	4'-1"	4'-4"	6'-11"	6'-5"	6'-1"	6'-4"	9'-8"	8'-11"	8'-2"	8'-8"	—	—

NOTES : REFER TO ELEVATIONS ON SHEET 1A OF 14

1-. FOR MULLIONS INSTALLED W/O STORM BARS

A) MULLION SPACING SHALL BE SUCH THAT MAXIMUM SLAT SPAN SHALL NOT BE EXCEEDED

2-. FOR MULLIONS INSTALLED W/ STORM BARS & HEADERS

A) MULLION SPACING SHALL BE SUCH THAT MAXIMUM HEADER SPAN SHALL NOT BE EXCEEDED

B) STORM BAR SPACING SHALL BE SUCH THAT MAXIMUM SLAT SPAN SHALL NOT BE EXCEEDED

FLORIDA BUILDING CODE. (High Velocity Hurricane Zone)

PRODUCT REVISED
as complying with the Florida
Building Code
Acceptance No 13-0117.04
Expiration Date 07/06/2016
By
Miami Dade Product Control
MIAMI-DADE COUNTY

WALTER A. TILLIT JR. LICENSE No. 44167 STATE OF FLORIDA PROFESSIONAL ENGINEER
P.E. SEAL/SIGNATURE/DATE

©2012 TILTECO INC.

TILTECO INC.
TILLIT TESTING & ENGINEERING COMPANY
6355 N.W. 36th St, Ste. 305 – VIRGINIA GARDENS, FL 33166
Phone : (305) 871-1530 , Fax : (305) 871-1531
e-mail: tilteco@aol.com
EB-0006719
WALTER A. TILLIT Jr., P.E.
FLORIDA Lic. # 44167

ASSA/60mm BERTHA ROLL-UP

EUROTEC, INC.
(ASSA MEMBER # 277)
8315 N.W. 74TH STREET
MIAMI, FL 33166
PHONE:(305)406-0944, FAX:(305)406-0946

REV. No	DESCRIPTION	DATE	REV. No	DESCRIPTION	DATE
1	OLD 11-056	12/21/12	3		
2			4		

DRAWN BY: A.O.
DATE: 12/21/12
DRAWING No: 12-178
SHEET 14 OF 14