MIAMI-DADE COUNTY
DEPARTMENT OF REGULATORY AND ECONOMIC RESOURCES (RER)
BOARD AND CODE ADMINISTRATION DIVISION

MIAMI–DADE COUNTY, FLORIDA
PRODUCT CONTROL SECTION
11805 SW 26 Street, Room 208
T (786) 315–2590 F (786) 315–2599
www.miamidade.gov/economy

NOTICE OF ACCEPTANCE (NOA)

Marvin Windows and Doors
Highway 11 West (P.O. Box 100)
Warroad, MN 56763–0100

SCOPE:

This NOA is being issued under the applicable rules and regulations governing the use of construction materials. The documentation submitted has been reviewed and accepted by Miami–Dade County RER–Product Control Section to be used in Miami–Dade County and other areas where allowed by the Authority Having Jurisdiction (AHJ).

This NOA shall not be valid after the expiration date stated below. The Miami–Dade County Product Control Section (In Miami–Dade County) and/or the AHJ (in areas other than Miami–Dade County) reserve the right to have this product or material tested for quality assurance purposes. If this product or material fails to perform in the accepted manner, the manufacturer will incur the expense of such testing and the AHJ may immediately revoke, modify, or suspend the use of such product or material within their jurisdiction. RER reserves the right to revoke this acceptance, if it is determined by Miami–Dade County Product Control Section that this product or material fails to meet the requirements of the applicable building code.

This product is approved as described herein, and has been designed to comply with the Florida Building Code, including the High Velocity Hurricane Zone.

DESCRIPTION: Series "StormPlus IZ4 Clipped, Extruded" Aluminum Tube Mullion – L.M.I.

APPROVAL DOCUMENT: Drawing No. **1223**, titled "Aluminum Tube Clipped Mullions", sheets 1 thru 8 of 8, dated 05/07/03 with revision **"C1"** dated 10/14/11, prepared by W. W. Schaefer Engineering & Consulting, P.A., signed and sealed by Warren W. Schaefer, P. E., bearing the Miami–Dade County Product Control Section Renewal stamp with the Notice of Acceptance number and Expiration date by the Miami–Dade County Product Control Section.

MISSILE IMPACT RATING: Large and Small Missile Impact Resistant

LABELING: Each unit shall bear a permanent label with the manufacturer's name or logo, city, state, series, and following statement: "Miami–Dade County Product Control Approved", unless otherwise noted herein.

REVISION of this NOA shall be considered after a renewal application has been filed and there has been no change in the applicable building code negatively affecting the performance of this product.

TERMINATION of this NOA will occur after the expiration date or if there has been a revision or change in the materials, use, and/ or manufacture of the product or process. Misuse of this NOA as an endorsement of any product, for sales, advertising or any other purposes shall automatically terminate this NOA. Failure to comply with any section of this NOA shall be cause for termination and removal of NOA.

ADVERTISEMENT: The NOA number preceded by the words Miami–Dade County, Florida, and followed by the expiration date may be displayed in advertising literature. If any portion of the NOA is displayed, then it shall be done in its entirety.

INSPECTION: A copy of this entire NOA shall be provided to the user by the manufacturer or its distributors and shall be available for inspection at the job site at the request of the Building Official.

This NOA **renews NOA No. 11–1026.05** and consists of this page 1 and evidence pages E–1, E–2 and E–3, as well as approval document mentioned above.

The submitted documentation was reviewed by **Jaime D. Gascon, P. E.**

MIAMI-DADE COUNTY APPROVED

JGascon
4/23/13

NOTICE OF ACCEPTANCE: EVIDENCE SUBMITTED

A. DRAWINGS

1. Manufacturer's die drawings and sections.
   (Submitted under NOA No. 03–0811.02)
2. Drawing No. **1223**, titled "Aluminum Tube Clipped Mullions", sheets 1 thru 8 of 8, dated 05/07/03 with revision "**C1**" dated 10/14/11, prepared by W. W. Schaefer Engineering & Consulting, P.A, signed and sealed by Warren W. Schaefer, P. E.
   (Submitted under NOA No. 11–1026.05)

B. TESTS

1. Test reports on: 1) Uniform Static Air Pressure Test, Loading per FBC, TAS 202–94
   2) Large Missile Impact Test per FBC, TAS 201–94
   3) Cyclic Wind Pressure Loading per FBC, TAS 203–94

   along with marked–up drawings and installation diagram of a direct glazed wood fixed window assembly w/ vertical and horizontal aluminum tube mullions, prepared by Architectural Testing, Inc., Test Report No. **ATI–02–45131.01**, dated 07/01/03, signed and sealed by Joseph A. Reed, P. E.
   (Submitted under previous NOA No. 03–0811.02)

C. CALCULATIONS

1. Anchor verification calculations and structural analysis, complying with **FBC–2010**, prepared by W. W. Schaefer Engineering & Consulting, P.A., dated 10/13/11, signed and sealed by Warren W. Schaefer, P. E.
   (Submitted under NOA No. 11–1026.05)
2. **Glazing complies with ASTM E1300–04**

D. QUALITY ASSURANCE

1. Miami–Dade Department of Regulatory and Economic Resources (RER).

E. MATERIAL CERTIFICATIONS

1. None.

F. STATEMENTS

1. Statement letter of conformance, complying with **FBC–2010**, and with **ANSI/ AAMA/ NWWDA 101/ I.S.2–97**, prepared by W. W. Schaefer Engineering & Consulting, P.A., dated 01/30/13, signed and sealed by Warren W. Schaefer, P. E.
2. Statement letter of no financial interest and independency, prepared by W. W. Schaefer Engineering & Consulting, P.A., dated 01/30/13, signed and sealed by Warren W. Schaefer, P. E.

Jaime D. Gascon, P. E.
Product Control Section Supervisor
NOA No. 13–0205.17
Expiration Date: October 30, 2018
Approval Date: May 03, 2013

NOTICE OF ACCEPTANCE: EVIDENCE SUBMITTED

F. STATEMENTS (CONTINUED)

3. Laboratory compliance letter for Test Report No. **ATI–02–45131.01** issued by Architectural Testing, Inc., dated 07/02/03, signed and sealed by Joseph A. Reed, P. E. ***(Submitted under previous NOA No. 03–0811.02)***

G. OTHERS

1. Notice of Acceptance No. **11–1026.05**, issued to Marvin Windows and Doors for their Series "Clipped Extruded Aluminum Tube Mullion – L.M.I.", approved on 01/12/12 and expiring on 10/30/13.

Jaime D. Gascon, P. E.
Product Control Section Supervisor
NOA No. 13–0205.17
Expiration Date: October 30, 2018
Approval Date: May 03, 2013

NOTE: THIS MULLION DRAWING IS ACCEPTABLE FOR USE ONLY WITH PRODUCTS SUPPLIED BY THE MANUFACTURER/DISTRIBUTOR LISTED ON THIS DRAWING

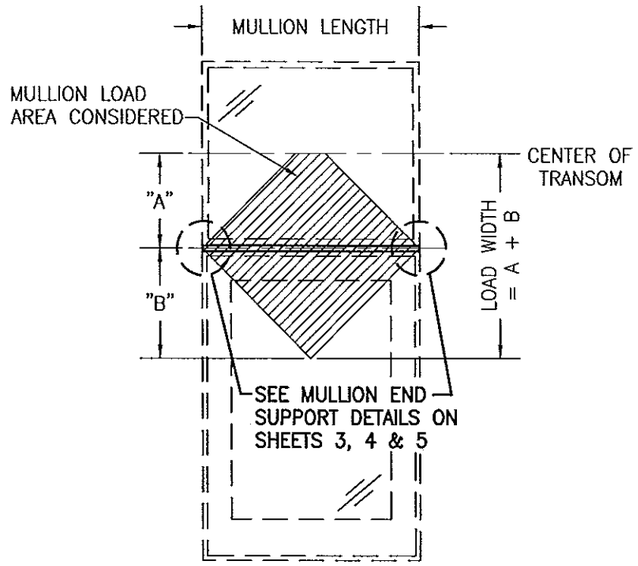

"A" = LESSER OF (MULLION LENGTH/2) OR (TRANSOM HEIGHT/2)
"B" = MULLION LENGTH/2

SINGLE WINDOW OR DOOR WITH FIXED TRANSOM
(SEE LOAD TABLE 1.0)

NOTE: WINDOW/DOOR MAY BE ANY FIXED OR OPERABLE UNIT
NOTE: MULLION MAY BE HORIZONTAL OR VERTICAL

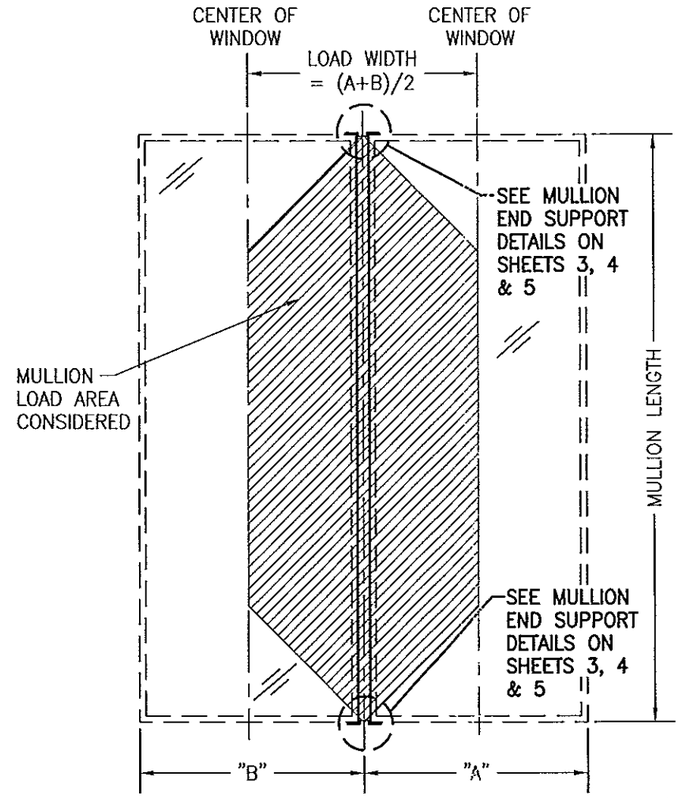

FIXED WINDOW TO FIXED WINDOW WHEN WINDOW WIDTHS ARE LESS THAN OR EQUAL TO THE MULLION LENGTH
(SEE LOAD TABLE 1.0)

NOTE: MULLION MAY BE HORIZONTAL OR VERTICAL

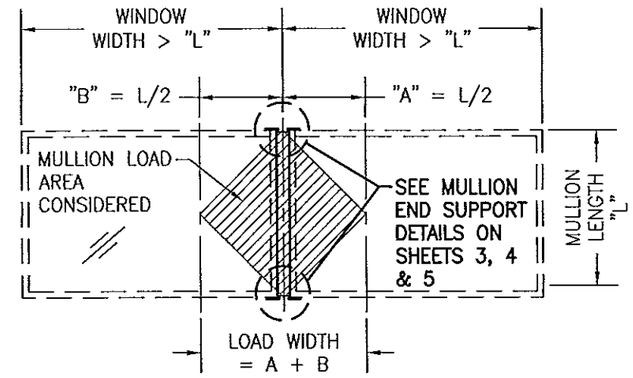

FIXED WINDOW TO FIXED WINDOW WHEN WINDOW WIDTHS ARE GREATER THAN THE MULLION LENGTH
(SEE LOAD TABLE 1.0)

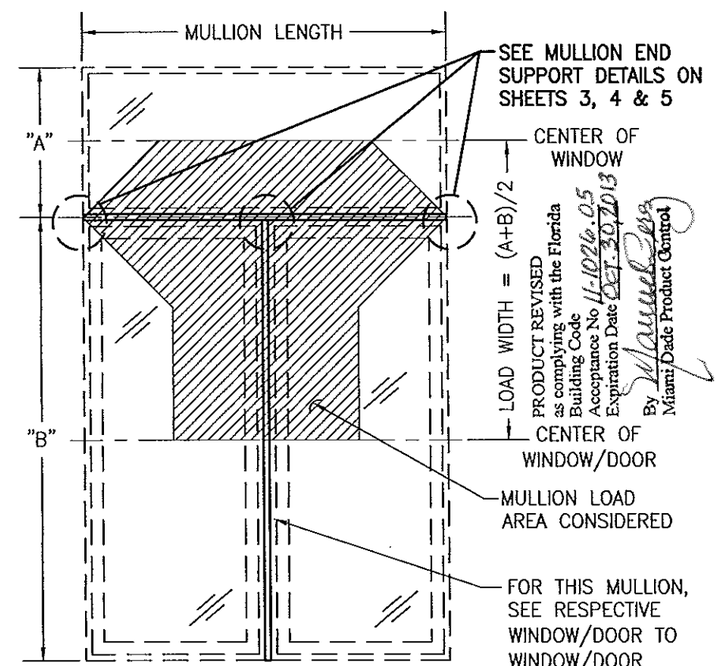

TWO (2) SINGLE DOORS OR WINDOWS WITH A SINGLE FIXED TRANSOM
(SEE LOAD TABLE 2.0)

NOTE: DOORS/WINDOWS MAY BE OPERABLE OR FIXED

PRODUCT REVISED
as complying with the Florida Building Code
Acceptance No 11-1026.05
Expiration Date Oct. 30, 2013
By
Miami Dade Product Control

GENERAL NOTES:

1. DOORS & WINDOWS SHALL BE UNDER SEPARATE APPROVAL. SEE THE PRODUCTS SPECIFIC APPROVAL FOR THEIR USE.
2. THESE MULLION SYSTEMS HAVE BEEN ANALYZED AND CERTIFIED FOR DESIGN PRESSURES NOT TO EXCEED THOSE SHOWN IN THE LOAD TABLES.
3. OPENINGS, INCLUDING BUCKS (IF USED AS SUPPORT), MUST BE DESIGNED & CONSTRUCTED TO WITHSTAND WIND LOADS TRANSFERRED BY THE MULLIONS END REACTIONS & SUPPORTED WINDOWS/DOORS.
4. ALL MATERIALS & FASTENERS SHALL BE IN ACCORDANCE WITH THESE DRAWINGS & MAY NOT VARY UNLESS SPECIFICALLY MENTIONED ON THE DRAWINGS.
5. THE DETAILS & SPECIFICATIONS SHOWN HEREIN REPRESENT THE PRODUCTS TESTED & PROPOSED FOR IMPACT, CYCLIC & UNIFORM STATIC AIR PRESSURE TESTING IN CONFORMANCE WITH THE FLORIDA BUILDING CODE PROTOCALS TAS--201, 202 & 203 FOR LARGE MISSILE IMPACT MULLIONS.
6. THESE MULLION SYSTEMS HAVE BEEN DESIGNED IN ACCORDANCE WITH AND MEET THE REQUIREMENTS OF THE FLORIDA BUILDING CODE (FBC) INCLUDING HIGH VELOCITY HURRICANE ZONES (HVHZ).
7. ALLOWABLE PRESSURE ON THE MULLED UNIT SHALL BE CONTROLLED BY THE LESSER ALLOWABLE PRESSURE OF THE MULLION, THE MULLION END CONNECTION OR THE INDIVIDUAL DOOR/WINDOW UNITS.
8. INDIVIDUAL WINDOW/DOOR UNIT SIZES & SHUTTER REQUIREMENTS ARE LIMITED BY THEIR OWN INDIVIDUAL "CERTIFICATION".
9. FOR WINDOW OR DOOR FRAME TO OPENING ATTACHMENT, SEE THE RESPECTIVE PRODUCT APPROVAL DRAWINGS/SPECIFICATIONS FOR THE WINDOW/DOOR.
10. MULLION LENGTHS ARE RESTRICTED BY THOSE SHOWN IN THE TABLES.
11. THE LOADS IN THESE TABLES CONSIDER WORSE CASE OF MULLION STRESS, DEFLECTION AND END REACTION.
12. ANY CONDITIONS NOT COVERED IN THIS CERTIFICATION SHALL BE SUBJECT TO SEPERATE ENGINEERING REVIEW.
13. ALL TUBES SHALL BE 6063-T6 ALUMINUM. ALL CONNECTION ANGLES SHALL BE MIN. 6063-T5 ALUMINUM. ALL U-CLIPS & T-CLIPS SHALL BE MIN. 6063-T5 OR T6 ALUMINUM.
14. ALL EMBEDMENTS SPECIFIED ARE TO BE BEYOND WALL FINISH.
15. MULLION TUBES MUST BE CONTINUOUS FROM END TO END.
16. WHEN VERTICALLY STACKED, THE MANUFACTURER/INSTALLER SHALL INSURE THAT THE DEAD WEIGHT OF THE ABOVE WINDOWS WILL NOT CAUSE UNDO STRESS ON THE BELOW WINDOWS. THESE MULLIONS ARE DESIGNED TO SUPPORT WIND LOAD ONLY & ARE NOT CONSIDERED TO SUPPORT DEAD LOAD OF THE WINDOWS/DOORS.
17. THESE MULLIONS ARE ACCEPTABLE FOR USE WITH IMPACT & NON--IMPACTED RATED WINDOWS & DOORS.
18. ALL ANCHORS SECURING MULLIONS TO PRESSURE TREATED BUCKS OR WOOD FRAMING SHALL BE CAPABLE OF RESISTING CORROSION CAUSED BY THE PRESSURE TREATING CHEMICALS IN THE WOOD.
19. DETERMINE THE POSITIVE & NEGATIVE DESIGN LOADS TO USE WHEN REFERENCING THESE DOCUMENTS IN ACCORDANCE WITH THE GOVERNING CODE AND GOVERNING WIND VELOCITY. FOR WIND LOAD CALCULATIONS IN ACCORDANCE WITH THE FLORIDA BUILDING CODE, A DIRECTIONALITY FACTOR OF Kd = 0.85 MAY BE APPLIED PER THE ASCE 7 STANDARD.
20. NO INCREASE IN ALLOWABLE STRESS HAS BEEN USED IN THE CERTIFICATION OF THIS PRODUCT. WIND LOAD DURATION FACTOR Cd = 1.6 WAS USED FOR WOOD SCREW ANALYSIS ONLY.
21. MATERIALS, INCLUDING BUT NOT LIMITED TO STEEL SCREWS, THAT COME INTO CONTACT WITH OTHER DISSIMILAR MATERIALS SHALL MEET THE REQUIREMENTS OF FLORIDA BUILDING CODE CHAPTER 20.

PRODUCT RENEWED
as complying with the Florida Building Code
Acceptance No 13-0205.17
Expiration Date 10/30/2018
By
Miami Dade Product Control

THESE DRAWINGS ARE APPLICABLE ONLY TO THE PRODUCT SPECIFIED. THEY MAY NOT BE USED FOR THE ASSEMBLY AND/OR INSTALLATION OF ANY OTHER PRODUCT NOR MAY THEY BE USED FOR RATIONAL AND/OR LOCAL APPROVAL OF ANY PRODUCT NOT PRODUCED BY THE MANUFACTURER STATED ON THESE DRAWINGS.

NOTE: ATTACHMENT OF WINDOW/DOOR FRAME TO MULLIONS SHALL BE AS REQUIRED BY THE INDIVIDUAL WINDOW/DOOR N.O.A. FOR ATTACHMENT TO BUCK/OPENING EXCEPT THAT SPECIFIED FRAME SCREWS MUST BE EQUILAVENT SIZE SMS SCREWS PREDILLED INTO TUBE OR SELF TAPPING SCREWS

WARREN W. SCHAEFER LICENSE No. 44135 STATE OF FLORIDA PROFESSIONAL ENGINEER

NO.	REVISION DESCRIPTION	BY	DATE
A1	UPDATE GENERAL NOTES TO 2004 CODE COMPLIANT	K.P.S.	08/12/03
B1	UPDATE TO PRESENT STANDARDS	W.W.S.	05/16/08
C1	UPDATE TO CURRENT STANDARDS	W.R.M.	10/14/11

DRAWN BY: K.P.S. | CHECKED BY: W.W.S.
PLOT: 1=24 | DATE: 05/07/03

DRAWING TITLE: ALUMINUM TUBE CLIPPED MULLIONS

MANUFACTURER: MARVIN WINDOWS & DOORS
HIGHWAY 11 WEST
WARROAD, MN 56763-0100
218-386-1430

CONSULTANTS: W. W. SCHAEFER ENGINEERING & CONSULTING, P.A. (CA 6809)
7480 150TH COURT NORTH
PALM BEACH GARDENS, FL 33418
PHONE: 561-744-3424

CERTIFICATION: OCT 14 2011
WARREN W. SCHAEFER, P.E.
P.E. NO. 44135

DRAWING NO. 1223 | REV. C
SHEET NO. 1 OF 8

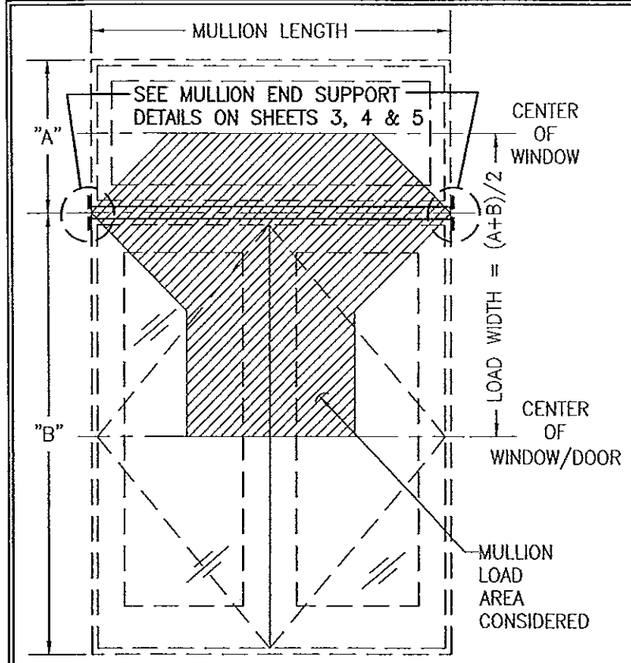

DOUBLE PANEL DOOR OR CASEMENT WINDOW WITH A SINGLE FIXED TRANSOM
(SEE LOAD TABLE 2.0)

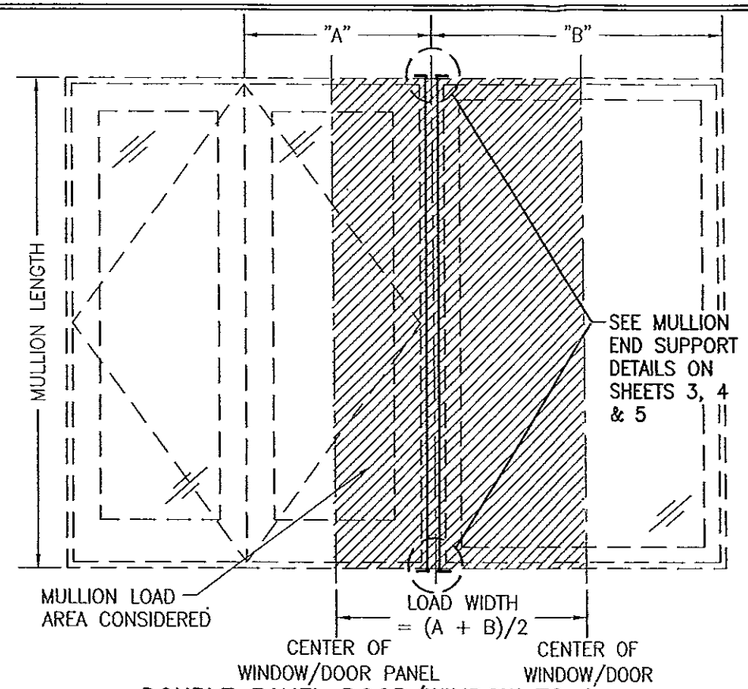

DOUBLE PANEL DOOR/WINDOW TO A SINGLE DOOR OR FIXED SIDELIGHT
(SEE LOAD TABLE 3.0)

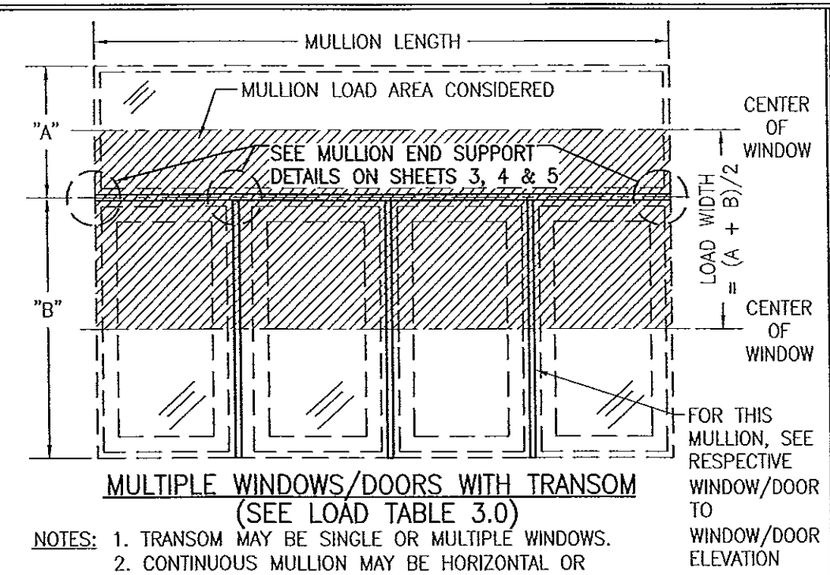

MULTIPLE WINDOWS/DOORS WITH TRANSOM
(SEE LOAD TABLE 3.0)

NOTES: 1. TRANSOM MAY BE SINGLE OR MULTIPLE WINDOWS.
2. CONTINUOUS MULLION MAY BE HORIZONTAL OR VERTICAL (HORIZONTAL SHOWN).

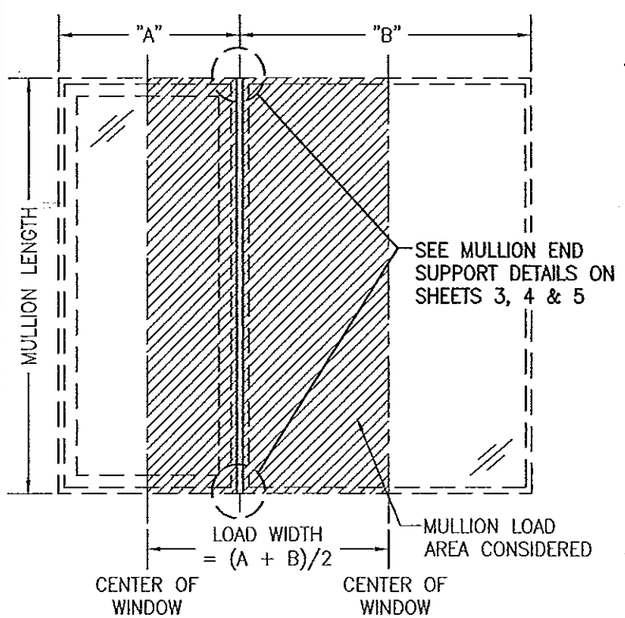

SINGLE OPERABLE DOOR/WINDOW TO A SINGLE OPERABLE OR FIXED DOOR/WINDOW
(SEE LOAD TABLE 3.0)

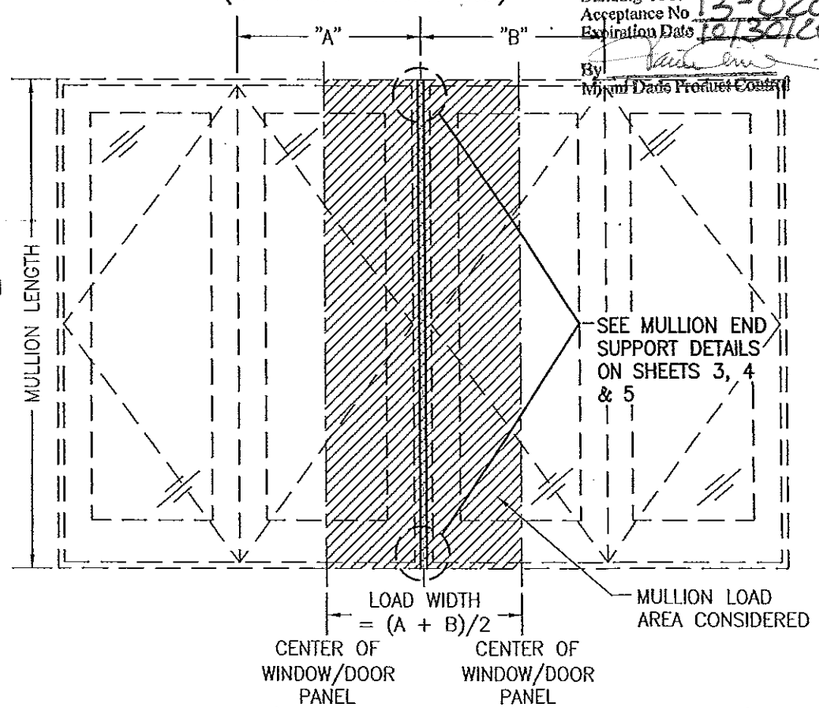

DOUBLE PANEL DOOR/WINDOW TO A DOUBLE PANEL DOOR/WINDOW
(SEE LOAD TABLE 3.0)

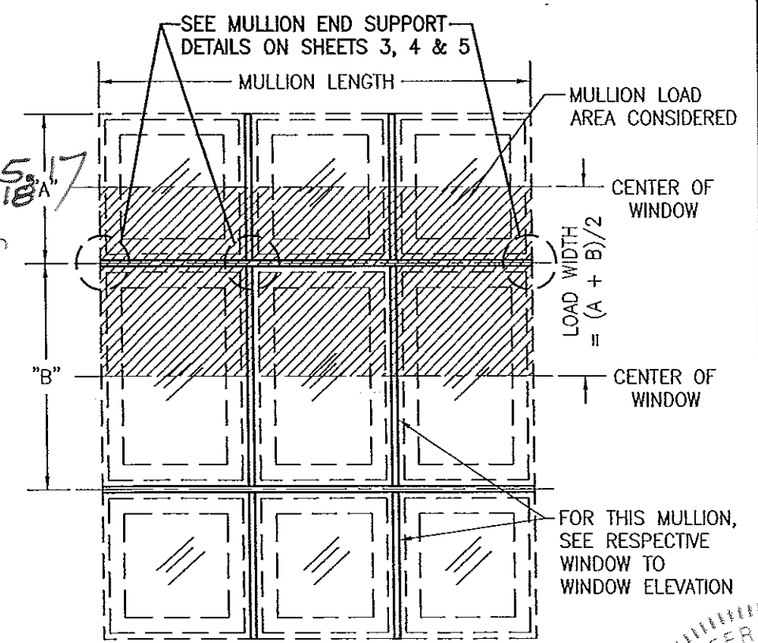

MULTIPLE WINDOWS (SEE LOAD TABLE 3.0)
(CONTINUOUS MULLION MAY BE HORIZONTAL OR VERTICAL (HORIZONTAL SHOWN))

NOTE: ATTACHMENT OF WINDOW/DOOR FRAME TO MULLIONS SHALL BE AS REQUIRED BY THE INDIVIDUAL WINDOW/DOOR N.O.A. FOR ATTACHMENT TO BUCK/OPENING EXCEPT THAT SPECIFIED FRAME SCREWS MUST BE EQUIVALENT SIZE SMS SCREWS PREDILLED INTO TUBE OR SELF TAPPING SCREWS

PRODUCT RENEWED as complying with the Florida Building Code Acceptance No 13-0205.17 Expiration Date 10/30/2018 By Miami Dade Product Control

PRODUCT REVISED as complying with the Florida Building Code Acceptance No 11-1026.05 Expiration Date Oct 30, 2016 By Miami Dade Product Control

DRAWN BY: K.P.S.	CHECKED BY: W.W.S.
PLOT: 1=24	DATE: 05/07/03

NO.	REVISION DESCRIPTION	BY	DATE

DRAWING TITLE: ALUMINUM TUBE CLIPPED MULLIONS

MANUFACTURER: MARVIN WINDOWS & DOORS
HIGHWAY 11 WEST
WARROAD, MN 56763-0100
218-386-1430

CONSULTANTS: W. W. SCHAEFER ENGINEERING & CONSULTING, P.A. (CA 6809)
7480 150TH COURT NORTH
PALM BEACH GARDENS, FL 33418
PHONE: 561-744-3424

CERTIFICATION: STATE OF FLORIDA PROFESSIONAL ENGINEER WARREN W. SCHAEFER LICENSE No. 44135
WARREN W. SCHAEFER, P.E.
P.E. NO. 44135

DRAWING NO. 1223 REV. C

SHEET NO. 2 OF 8

OCT 14 2011

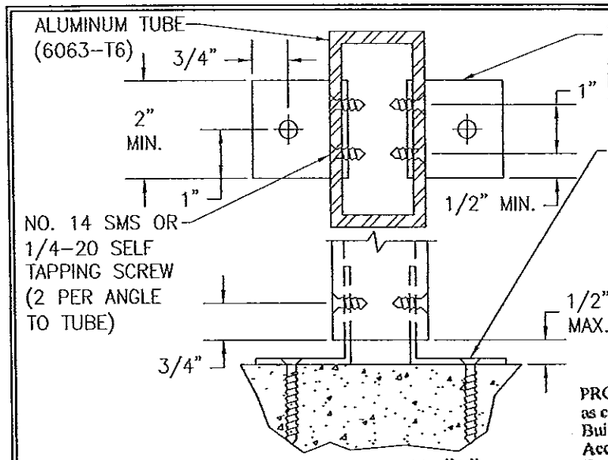

CONNECTION "A"
(INTO WOOD, BLOCK/CONCRETE, METAL STUD, STEEL OR ALUMINUM)

PRODUCT RENEWED as complying with the Florida Building Code Acceptance No 13-0205.17 Expiration Date 10/30/2018 By Miami Dade Product Control

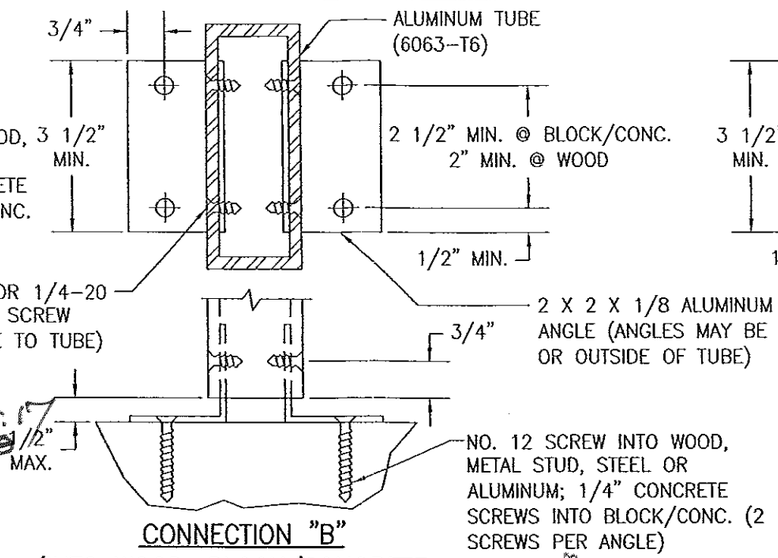

CONNECTION "B"
(INTO WOOD, BLOCK/CONCRETE, METAL STUD, STEEL OR ALUMINUM)

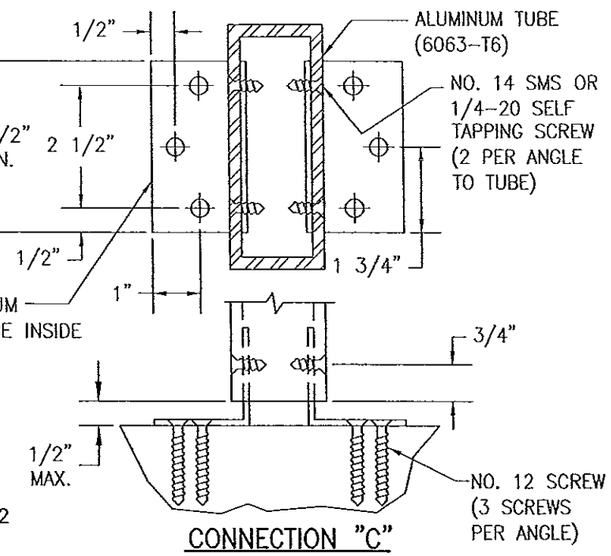

CONNECTION "C"
(INTO WOOD, METAL STUD, STEEL OR ALUMINUM)

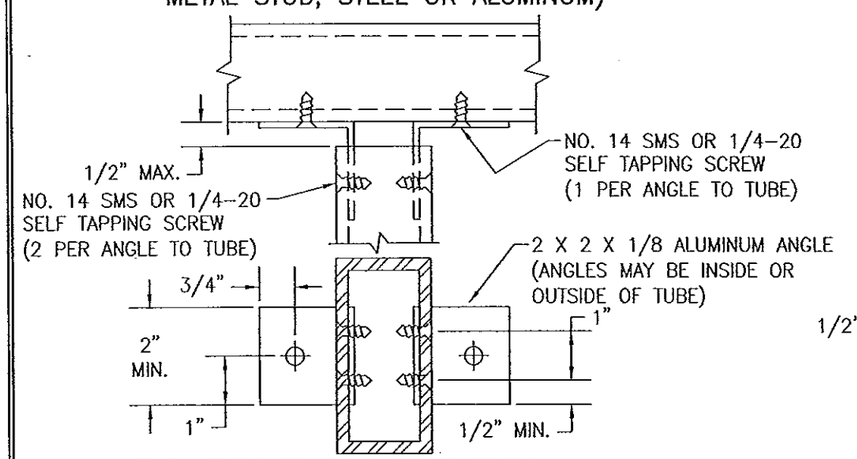

TYP. TUBE TO TUBE CONNECTION
(CONSIDER EQUIVALENT TO CONNECTION "A")

ANCHOR REQUIREMENTS			
(3) ANCHOR	SUBSTRATE	MIN. EMBED	MIN. EDGE DIST.
NO. 12 SMS	(4) WOOD	1 3/8"	3/4"
(7) NO. 12 SELF TAPPING/ DRILLING SCREW	(6)METAL STUD, STEEL OR ALUMINUM	FULL	1/2"
(1) 1/4" CONCRETE SCREW	(5) BLOCK/CONCRETE	1 1/4"	2 1/4"
(2) 3/8" WEDGE/SLEEVE ANCHOR	(5) CONCRETE FILLED BLOCK OR CONCRETE	2 1/2"	3"

(1) CONCRETE SCREWS MAY BE HILTI KWIK-CON II'S, ELCO ULTRACON OR ELCO CRETE-FLEX SS4.
(2) WEDGE/SLEEVE ANCHORS MAY BE RAMSET RED HEAD DYNABOLTS.
(3) IN COASTAL AREAS, ALL MULLION ANCHORS TO SUBSTRATE MUST BE STAINLESS STEEL.
(4) WOOD = MIN. NO. 3 GRADE SOUTHERN PINE (G = 0.55)
(5) CONCRETE = MIN. 2500 PSI.
(6) METAL STUD = MIN. 18 GA. Fy = 33 KSI.; STEEL = MIN. 1/8" THICK A-36; ALUMINUM = MIN. 1/8" THICK 6063-T5
(7) SELF TAPPING/DRILLING SCREWS SHALL BE CORROSION RESISTANT MIN. SAE GR. 5 STEEL OR MIN. ALLOY GROUP 1, 2, & 3 CONDITION "A" STAINLESS STEEL

NOTE: ALL SCREWS JOINING CONNECTORS TO TUBES MUST HAVE FULL THREAD PENETRATION THROUGH ALL MATERIAL & SHALL BE CORROSION RESISTANT MIN. GR. 2 STEEL OR MIN. ALLOY GROUP 1, 2, & 3 CONDITION "A" STAINLESS STEEL

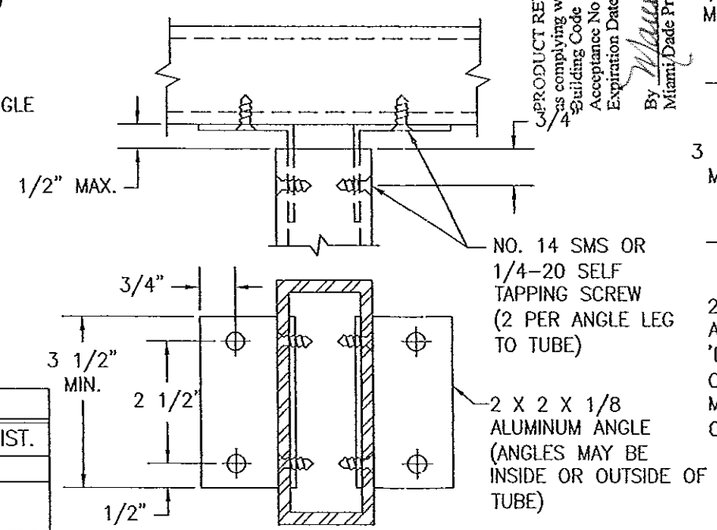

TYP. TUBE TO TUBE CONNECTION
(CONSIDER EQUIVALENT TO OR STRONGER THAN ALL CONNECTIONS)

PRODUCT REVISED as complying with the Florida Building Code Acceptance No 11-1026.05 Expiration Date Oct 30, 2013 By Miami Dade Product Control

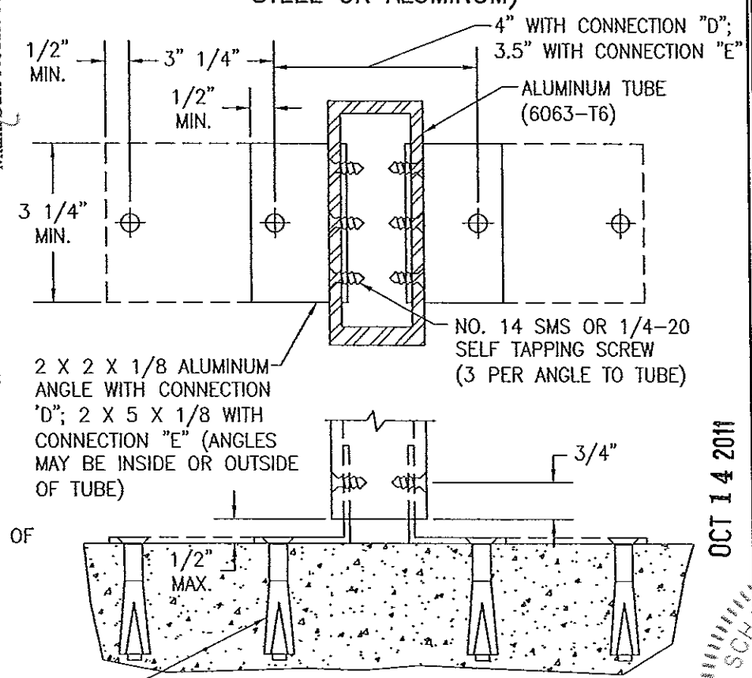

CONNECTION "D" & "E"
(INTO CONCRETE OR CONCRETE FILLED BLOCK)
"D" = 2 ANCHORS & 2 X 2 ANGLES
"E" = 4 ANCHORS & 2 X 5 ANGLES

MULLION END CONNECTION DETAILS USING CLIP ANGLES

OCT 14 2011

DRAWN BY: K.P.S.	CHECKED BY: W.W.S.
PLOT: 1=3	DATE: 05/07/03

NO.	REVISION DESCRIPTION	BY	DATE
A2	UPDATE ANCHOR REQUIREMENTS	K.P.S.	08/12/05
	EDGE DISTANCE & NOTES		
A3	UPDATE CONN. "E" & "F" DIMS.	K.P.S.	08/12/05

DRAWING TITLE: ALUMINUM TUBE CLIPPED MULLIONS

MANUFACTURER: MARVIN WINDOWS & DOORS
HIGHWAY 11 WEST
WARROAD, MN 56763-0100
218-386-1430

CONSULTANTS: W. W. SCHAEFER ENGINEERING & CONSULTING, P.A. (CA 6809)
7480 150TH COURT NORTH
PALM BEACH GARDENS, FL 33418
PHONE: 561-744-3424

CERTIFICATION: WARREN W. SCHAEFER, P.E. No. 44135 STATE OF FLORIDA PROFESSIONAL ENGINEER

DRAWING NO.	REV.
1223	C

SHEET NO. 3 OF 8

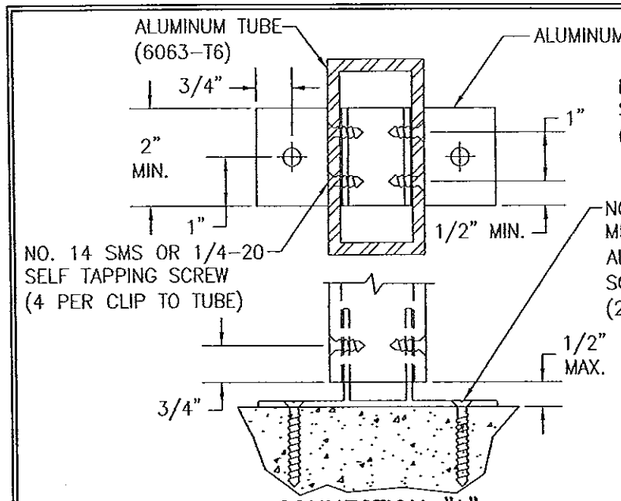

CONNECTION "A"
(INTO WOOD, BLOCK/CONCRETE, METAL STUD, STEEL OR ALUMINUM)

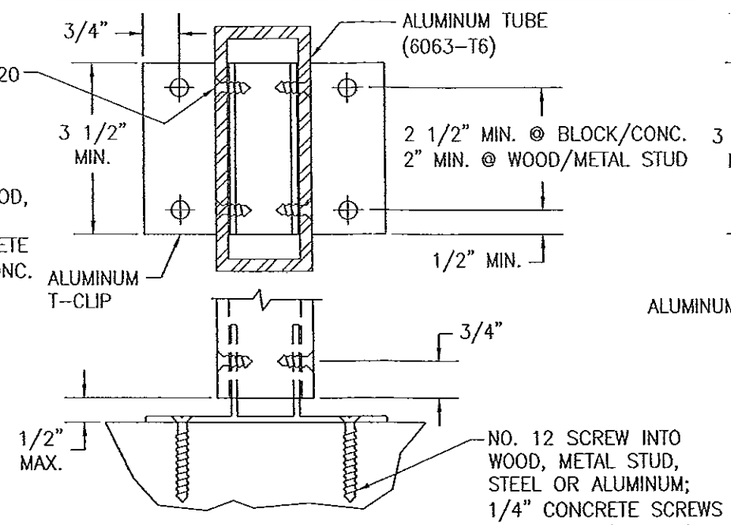

CONNECTION "B"
(INTO WOOD, BLOCK/CONCRETE, METAL STUD, STEEL OR ALUMINUM)

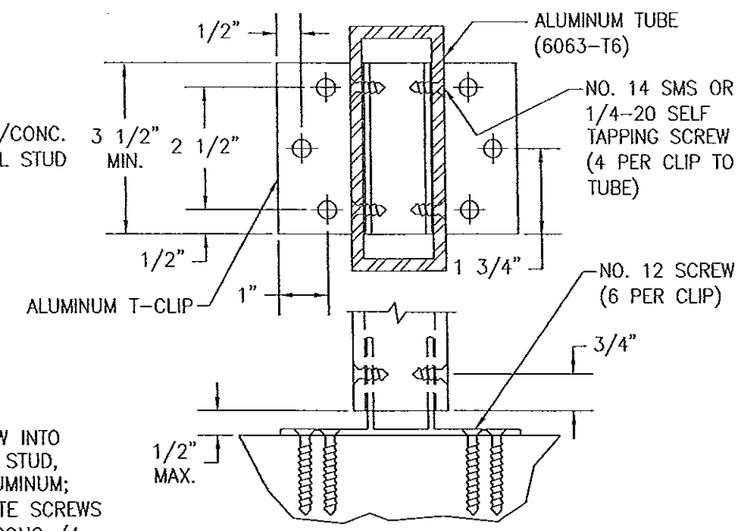

CONNECTION "C"
(INTO WOOD, METAL STUD, STEEL OR ALUMINUM)

PRODUCT RENEWED
as complying with the Florida Building Code
Acceptance No 13-0205.17
Expiration Date 10/30/2018
By
Miami Dade Product Control

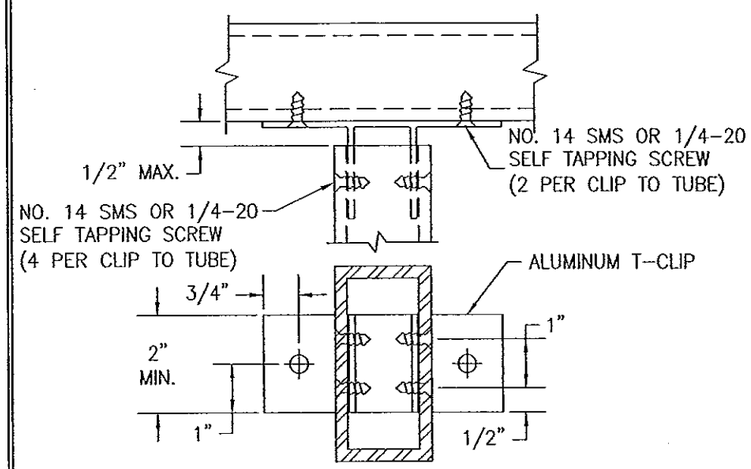

TYP. TUBE TO TUBE CONNECTION
(CONSIDER EQUIVALENT TO CONNECTION "A")

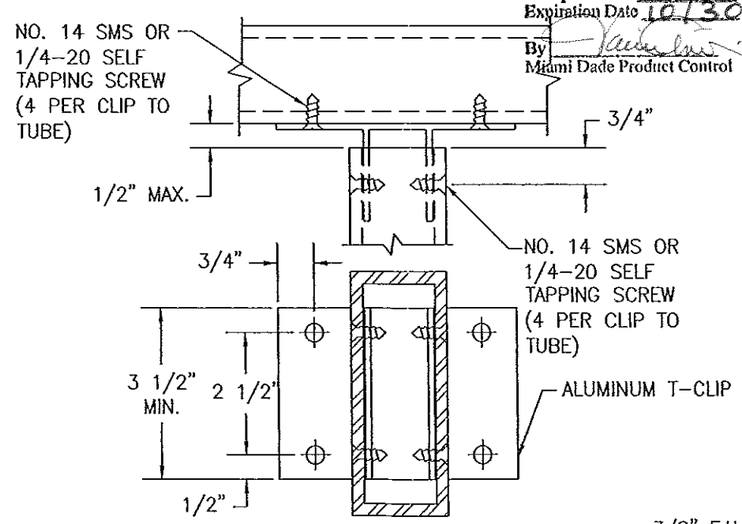

TYP. TUBE TO TUBE CONNECTION
(CONSIDER EQUIVALENT TO OR STRONGER THAN ALL CONNECTIONS)

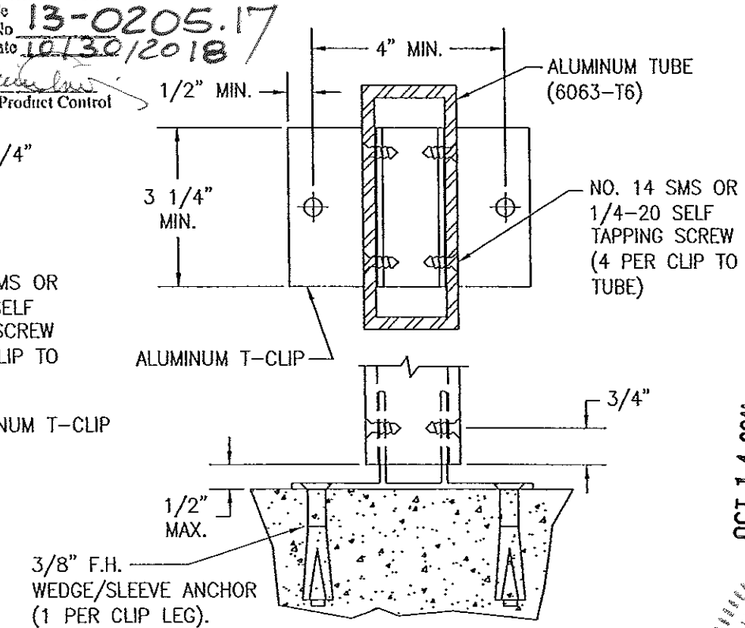

CONNECTION "D"
(INTO CONCRETE OR CONCRETE FILLED BLOCK)

ANCHOR REQUIREMENTS
SEE TABLE ON SHEET 3

MULLION END CONNECTION DETAILS USING T-CLIPS

ALL CLIPS MAY BE EXTRUDED SUCH THAT THE LEGS CONNECTING TO THE TUBE ARE INSIDE OR OUTSIDE THE TUBE. SEE PARTS NOTE ON SHEET 6.

PRODUCT REVISED
as complying with the Florida Building Code
Acceptance No 11-1026.05
Expiration Date Oct. 30, 2013
By
Miami Dade Product Control

OCT 14 2011

DRAWN BY: K.P.S.	CHECKED BY: W.W.S.
PLOT: 1=3	DATE: 05/07/03

NO.	REVISION DESCRIPTION	BY	DATE
A2	UPDATE ANCHOR REQUIREMENTS	K.P.S.	08/12/05
	EDGE DISTANCE & NOTES		
A3	UPDATE CONN. "E" & "F" DIMS.	K.P.S.	08/12/05

DRAWING TITLE: ALUMINUM TUBE CLIPPED MULLIONS

MANUFACTURER: MARVIN WINDOWS & DOORS
HIGHWAY 11 WEST
WARROAD, MN 56763-0100
218-386-1430

CONSULTANTS: W. W. SCHAEFER ENGINEERING & CONSULTING, P.A. (CA 6809)
7480 150TH COURT NORTH
PALM BEACH GARDENS, FL 33418
PHONE: 561-744-3424

CERTIFICATION: WARREN W. SCHAEFER, P.E. LICENSE NO. 41135 — STATE OF FLORIDA — PROFESSIONAL ENGINEER

DRAWING NO.	REV.
1223	C

SHEET NO. 4 OF 8

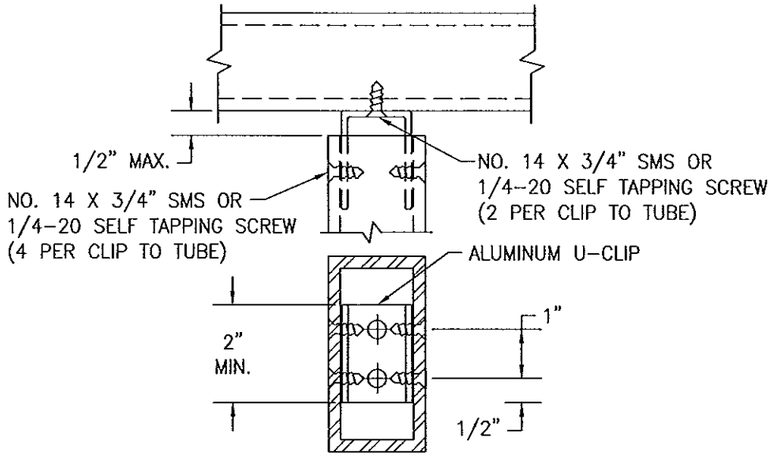

TYP. ALTERNATE TUBE TO TUBE CONNECTION
(CONSIDER EQUIVALENT TO CONNECTION "A")

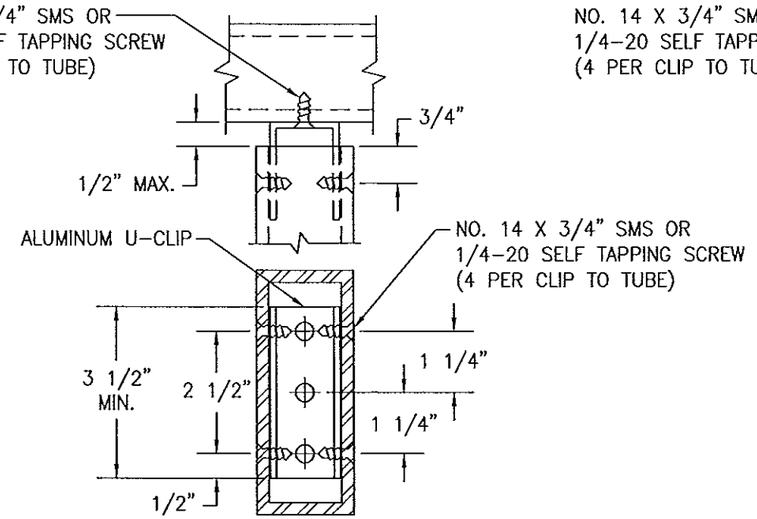

TYP. ALTERNATE TUBE TO TUBE CONNECTION
(CONSIDER EQUIVALENT TO
CONNECTIONS "A" THROUGH "D")

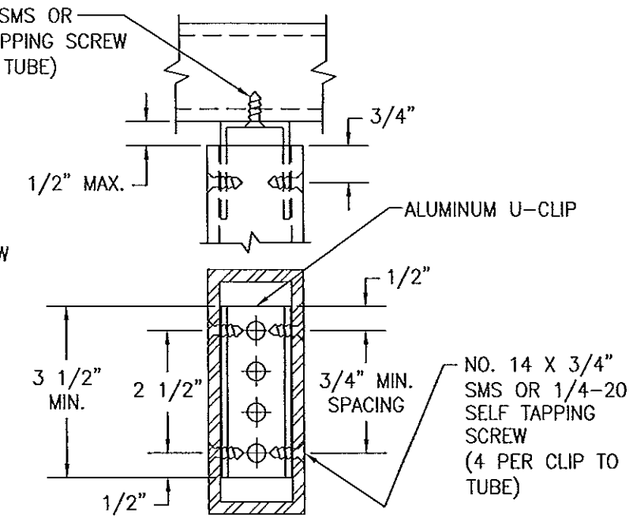

TYP. ALTERNATE TUBE TO TUBE CONNECTION
(CONSIDER EQUIVALENT TO
CONNECTION "E")

ALTERNATE TUBE TO TUBE CONNECTION DETAILS USING U-CLIPS

"L" ANGLES

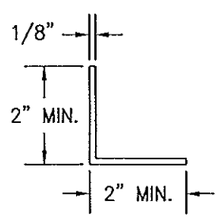

TYPICAL CLIP ANGLE
(6063-T5 ALUMINUM)

"T" & "U" CLIPS

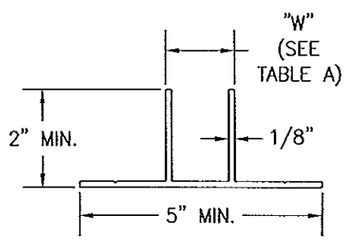

TYPICAL EXTRUDED T-CLIP
(6063-T6 ALUMINUM)

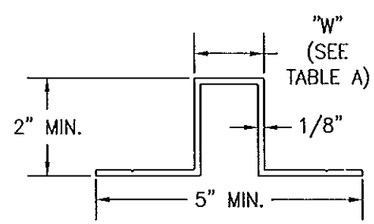

ALTERNATE EXTRUDED
OR BENT T-CLIP
(MAY REPLACE ALL T-CLIPS
SHOWN IN DETAILS)
(6063-T5 ALUMINUM)

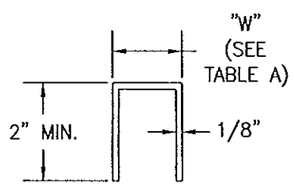

ALTERNATE U-CLIP
(T OR U-CLIP WITH FLANGES REMOVED)
(6063-T5 OR T6 ALUMINUM)

TABLE A	
TUBE TYPE	"W"
1X4X1/8	11/16"
2X4X1/8 & 2X5X1/8	1 11/16"
2X4X1/4 & 2X5X1/4	1 7/16"

PARTS NOTE: DIMENSIONS SHOWN CONSIDER PLACEMENT OF THE CLIPS TO BE INSIDE THE TUBES. IT SHALL BE ACCEPTABLE FOR THE CLIPS TO BE SIZED SUCH THAT THEY FIT SNUGLY OUTSIDE THE TUBE AS WELL. CONNECTION OF THE CLIPS TO THE TUBES SHALL BE AS SPECIFIED REGARDLESS OF WHETHER THEY CONNECT INSIDE OR OUTSIDE THE TUBES.

MULLION SECTIONS

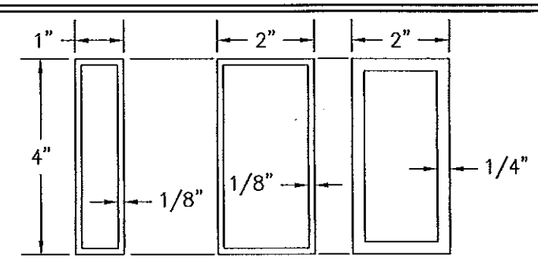

APPLICABLE 4" MULLION TUBES
(6063-T6 ALUMINUM)

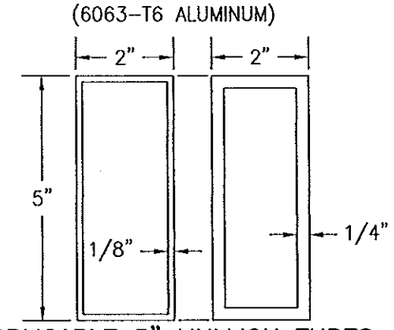

APPLICABLE 5" MULLION TUBES
(6063-T6 ALUMINUM)

PRODUCT RENEWED
as complying with the Florida
Building Code
Acceptance No 13-0205.17
Expiration Date 10/30/2018
By
Miami Dade Product Control

PRODUCT REVISED
as complying with the Florida
Building Code
Acceptance No 11-1026.05
Expiration Date Oct. 30, 2013
By
Miami Dade Product Control

WARREN W. SCHAEFER LICENSE No. 44135 STATE OF FLORIDA PROFESSIONAL ENGINEER

DRAWN BY: K.P.S.	CHECKED BY: W.W.S.
PLOT: 1=3	DATE: 05/07/03

NO.	REVISION DESCRIPTION	BY	DATE

DRAWING TITLE: ALUMINUM TUBE CLIPPED MULLIONS

MANUFACTURER: MARVIN WINDOWS & DOORS
HIGHWAY 11 WEST
WARROAD, MN 56763-0100
218-386-1430

CONSULTANTS: W. W. SCHAEFER ENGINEERING & CONSULTING, P.A. (CA 6809)
7480 150TH COURT NORTH
PALM BEACH GARDENS, FL 33418
PHONE: 561-744-3424

CERTIFICATION: OCT 14 2011
WARREN W. SCHAEFER, P.E.
P.E. NO. 44135

DRAWING NO. 1223 REV. C

SHEET NO. 5 OF 8

LOAD TABLE 1.0

MAXIMUM MULLION LENGTH (IN.)	MAXIMUM LOAD WIDTH (IN.)	ALLOWABLE PRESSURE (PSF)								
		4X1X1/8 TUBE	4X2X1/8 TUBE	4X2X1/4 OR 5X2X1/8 TUBE	5X2X1/4 TUBE	CONNECTION TYPES				
						"A"	"B"	"C"	"D"	"E"
54	54	85.0	85.0	85.0	85.0	85.0	85.0	85.0	85.0	85.0
60	48	85.0	85.0	85.0	85.0	78.3	85.0	85.0	85.0	85.0
	54	85.0	85.0	85.0	85.0	76.0	85.0	85.0	85.0	85.0
	60	81.5	85.0	85.0	85.0	75.2	85.0	85.0	85.0	85.0
66	36	85.0	85.0	85.0	85.0	78.3	85.0	85.0	85.0	85.0
	42	85.0	85.0	85.0	85.0	71.6	85.0	85.0	85.0	85.0
	48	84.2	85.0	85.0	85.0	67.1	85.0	85.0	85.0	85.0
	54	74.9	85.0	85.0	85.0	64.3	85.0	85.0	85.0	85.0
	60	67.4	85.0	85.0	85.0	62.7	85.0	85.0	85.0	85.0
	66	61.2	85.0	85.0	85.0	62.1	85.0	85.0	85.0	85.0
72	30	85.0	85.0	85.0	85.0	79.2	85.0	85.0	85.0	85.0
	36	85.0	85.0	85.0	85.0	69.6	85.0	85.0	85.0	85.0
	42	80.6	85.0	85.0	85.0	63.2	85.0	85.0	85.0	85.0
	48	70.6	85.0	85.0	85.0	58.8	85.0	85.0	85.0	85.0
	54	62.7	85.0	85.0	85.0	55.7	85.0	85.0	85.0	85.0
	60	56.4	82.5	85.0	85.0	53.7	85.0	85.0	85.0	85.0
	66	51.3	75.0	85.0	85.0	52.6	85.0	85.0	85.0	85.0
	72	47.0	68.7	85.0	85.0	52.2	85.0	85.0	85.0	85.0
78	24	85.0	85.0	85.0	85.0	85.0	85.0	85.0	85.0	85.0
	30	85.0	85.0	85.0	85.0	71.6	85.0	85.0	85.0	85.0
	36	74.0	85.0	85.0	85.0	62.7	85.0	85.0	85.0	85.0
	42	63.4	85.0	85.0	85.0	56.5	85.0	85.0	85.0	85.0
	48	55.5	81.1	85.0	85.0	52.2	85.0	85.0	85.0	85.0
	54	49.3	72.1	85.0	85.0	49.2	85.0	85.0	85.0	85.0
	60	44.4	64.9	85.0	85.0	47.0	85.0	85.0	85.0	85.0
	66	40.4	59.0	85.0	85.0	45.6	85.0	85.0	85.0	85.0
	72	37.0	54.0	82.1	85.0	44.8	85.0	85.0	85.0	85.0
84	24	85.0	85.0	85.0	85.0	78.3	85.0	85.0	85.0	85.0
	30	71.1	85.0	85.0	85.0	65.4	85.0	85.0	85.0	85.0
	36	59.2	85.0	85.0	85.0	57.0	85.0	85.0	85.0	85.0
	42	50.8	74.2	85.0	85.0	51.2	85.0	85.0	85.0	85.0
	48	44.4	64.9	85.0	85.0	47.0	85.0	85.0	85.0	85.0
	54	39.5	57.7	85.0	85.0	44.0	85.0	85.0	85.0	85.0
	60	35.5	51.9	85.0	85.0	41.8	83.6	85.0	85.0	85.0
	66	32.3	47.2	77.3	85.0	40.2	80.4	85.0	85.0	85.0
	72	29.6	43.3	70.8	85.0	39.2	78.3	85.0	85.0	85.0
90	18	85.0	85.0	85.0	85.0	85.0	85.0	85.0	85.0	85.0
	24	72.2	85.0	85.0	85.0	72.3	85.0	85.0	85.0	85.0
	30	57.8	84.4	85.0	85.0	60.2	85.0	85.0	85.0	85.0
	36	48.2	70.4	85.0	85.0	52.2	85.0	85.0	85.0	85.0
	42	41.3	60.3	85.0	85.0	46.7	85.0	85.0	85.0	85.0
	48	36.1	52.8	85.0	85.0	42.7	85.0	85.0	85.0	85.0
	54	32.1	46.9	82.0	85.0	39.8	79.6	85.0	85.0	85.0
	60	28.9	42.2	73.8	85.0	37.6	75.2	85.0	85.0	85.0
	66	26.3	38.4	67.1	85.0	36.0	72.0	85.0	85.0	85.0
	72	N/A	35.2	61.5	85.0	34.8	69.6	85.0	84.3	85.0

INSTRUCTIONS FOR TABLE USE:

1. DETERMINE REQUIRED WIND PRESSURE FOR THE OPENING.
2. DETERMINE THE MULLION LENGTH & LOAD WIDTH USING THE APPLICABLE ELEVATION ON SHEETS 1 & 2.
3. CHOOSE A TUBE SIZE THAT MEETS OR EXCEEDS THE REQUIRED PRESSURE FOR THE APPLICABLE MULLION LENGTH & LOAD WIDTH CONDITIONS.
4. CHOOSE A CONNECTION TYPE THAT MEETS OR EXCEEDS THE REQUIRED PRESSURE FOR THE APPLICABLE MULLION LENGTH & LOAD WIDTH CONDITIONS.

LOAD TABLE 1.0 (CONT.)

MAXIMUM MULLION LENGTH (IN.)	MAXIMUM LOAD WIDTH (IN.)	ALLOWABLE PRESSURE (PSF)								
		4X1X1/8 TUBE	4X2X1/8 TUBE	4X2X1/4 OR 5X2X1/8 TUBE	5X2X1/4 TUBE	CONNECTION TYPES				
						"A"	"B"	"C"	"D"	"E"
96	18	79.4	85.0	85.0	85.0	85.0	85.0	85.0	85.0	85.0
	24	59.5	85.0	85.0	85.0	67.1	85.0	85.0	85.0	85.0
	30	47.6	69.6	85.0	85.0	55.7	85.0	85.0	85.0	85.0
	36	39.7	58.0	85.0	85.0	48.2	85.0	85.0	85.0	85.0
	42	34.0	49.7	85.0	85.0	43.0	85.0	85.0	85.0	85.0
	48	29.8	43.5	76.0	85.0	39.2	78.3	85.0	85.0	85.0
	54	26.5	38.7	67.6	85.0	36.3	72.7	85.0	85.0	85.0
	60	N/A	34.8	60.8	85.0	34.2	68.4	85.0	82.8	85.0
	66	N/A	31.6	55.3	85.0	32.6	65.1	83.1	78.8	85.0
	72	N/A	29.0	50.7	85.0	31.3	62.7	80.0	75.9	85.0
102	18	66.2	85.0	85.0	85.0	80.9	85.0	85.0	85.0	85.0
	24	49.6	72.5	85.0	85.0	62.7	85.0	85.0	85.0	85.0
	30	39.7	58.0	85.0	85.0	51.9	85.0	85.0	85.0	85.0
	36	33.1	48.3	84.5	85.0	44.8	85.0	85.0	85.0	85.0
	42	28.4	41.4	72.5	85.0	39.8	79.6	85.0	85.0	85.0
	48	24.8	36.3	63.4	85.0	36.2	72.3	85.0	85.0	85.0
	54	N/A	32.2	56.4	85.0	33.4	66.8	85.0	80.9	85.0
	60	N/A	29.0	50.7	85.0	31.3	62.7	80.0	75.9	85.0
	66	N/A	26.4	46.1	83.7	29.7	59.4	75.9	72.0	85.0
	72	N/A	N/A	42.3	76.7	28.5	57.0	72.7	69.0	85.0
108	18	55.7	81.4	85.0	85.0	76.0	85.0	85.0	85.0	85.0
	24	41.8	61.1	85.0	85.0	58.8	85.0	85.0	85.0	85.0
	30	33.4	48.9	85.0	85.0	48.5	85.0	85.0	85.0	85.0
	36	27.9	40.7	71.2	85.0	41.8	83.6	85.0	85.0	85.0
	42	N/A	34.9	61.0	85.0	37.0	74.1	85.0	85.0	85.0
	48	N/A	30.5	53.4	85.0	33.6	67.1	85.0	81.3	85.0
	54	N/A	27.1	47.5	85.0	30.9	61.9	79.0	74.9	85.0
	60	N/A	N/A	42.7	77.5	28.9	57.8	73.8	70.0	85.0
	66	N/A	N/A	38.8	70.5	27.3	54.7	69.8	66.2	85.0
	72	N/A	N/A	35.6	64.6	26.1	52.2	66.7	73.2	85.0
120	18	40.6	59.4	85.0	85.0	67.7	85.0	85.0	85.0	85.0
	24	30.5	44.5	77.9	85.0	52.2	85.0	85.0	85.0	85.0
	30	24.4	35.6	62.3	85.0	43.0	85.0	85.0	85.0	85.0
	36	N/A	29.7	51.9	85.0	36.9	73.7	85.0	85.0	85.0
	42	N/A	25.4	44.5	80.7	32.6	65.1	83.1	78.8	85.0
	48	N/A	N/A	38.9	70.6	29.4	58.8	75.0	71.1	85.0
	54	N/A	N/A	34.6	62.8	27.0	53.9	68.8	65.3	85.0
	60	N/A	N/A	31.1	56.5	25.1	50.1	64.0	60.7	85.0
	66	N/A	N/A	28.3	51.4	23.6	47.1	60.2	57.1	85.0
	72	N/A	N/A	26.0	47.1	22.4	44.8	57.1	54.2	85.0
126	18	N/A	51.3	85.0	85.0	64.3	85.0	85.0	85.0	85.0
	24	N/A	38.5	67.3	85.0	49.5	85.0	85.0	85.0	85.0
	30	N/A	30.8	53.8	85.0	40.6	81.3	85.0	85.0	85.0
	36	N/A	25.6	44.8	81.4	34.8	69.6	85.0	84.3	85.0
	42	N/A	N/A	38.4	69.7	30.7	61.4	78.4	74.3	85.0
	48	N/A	N/A	33.6	61.0	27.6	55.3	70.6	66.9	85.0
	54	N/A	N/A	29.9	54.2	25.3	50.6	64.6	61.3	85.0
	60	N/A	N/A	26.9	48.8	23.5	47.0	60.0	56.9	85.0
	66	N/A	N/A	24.5	44.4	22.1	44.1	56.3	53.4	85.0

TABLE NOTES:

1. ALL TUBES SHALL BE MIN. 6063-T6 ALUMINUM.
2. FOR ALL CONNECTION TYPES, SEE SHEETS 3, 4 & 5 FOR DETAIL.
3. INDIVIDUAL UNIT SIZES & SHUTTER REQUIREMENTS ARE LIMITED BY THEIR OWN INDIVIDUAL "CERTIFICATION".
4. IN ORDER TO SIMPLIFY TABLES, TABLE PRESSURES ARE LIMITED TO 85 PSF. USE OF THESE MULLIONS FOR PRESSURES HIGHER THAN 85 PSF SHALL BE REVIEWED UNDER SEPERATE APPROVAL.
5. THESE LOAD TABLES ARE CERTIFIED AS CORRECT IN CONTENT. HOWEVER, CHOOSING OF THE CORRECT MULLION & CONNECTION FROM THESE TABLES FOR ITS SPECIFIC USE IS THE RESPONSIBILITY OF THOSE USING THE TABLES AND SHOULD BE VERIFIED BY THE BUILDING OFFICIAL OR A FLORIDA CERTIFIED ENGINEER.
6. "N/A" DESIGNATES A SIZE NOT APPLICABLE TO THAT SIZE OPTION.

PRODUCT REVISED
as complying with the Florida
Building Code
Acceptance No 11-1026.05
Expiration Date Oct. 30, 2013
By
Miami Dade Product Control

PRODUCT RENEWED
as complying with the Florida
Building Code
Acceptance No 13-0205.17
Expiration Date 10/30/2018
By
Miami Dade Product Control

WARREN W. SCHAEFER LICENSE No. 44135 STATE OF FLORIDA PROFESSIONAL ENGINEER

NO.	REVISION DESCRIPTION	BY	DATE
A4	REVISED CONN. "F" LOADS	K.P.S.	08/12/05
A5	DELETED TABLE NOTE 5	K.P.S.	08/12/05

DRAWN BY: K.P.S. | CHECKED BY: W.W.S.
PLOT: 1=1 | DATE: 05/07/03

DRAWING TITLE: ALUMINUM TUBE CLIPPED MULLIONS

MANUFACTURER: MARVIN WINDOWS & DOORS
HIGHWAY 11 WEST
WARROAD, MN 56763-0100
218-386-1430

CONSULTANTS: W. W. SCHAEFER ENGINEERING & CONSULTING, P.A. (CA 6809)
7480 150TH COURT NORTH
PALM BEACH GARDENS, FL 33418
PHONE: 561-744-3424

CERTIFICATION
OCT 14 2011
WARREN W. SCHAEFER P.E.
P.E. NO. 44135

DRAWING NO. 1223 | REV. C
SHEET NO. 6 OF 8

LOAD TABLE 2.0

MAXIMUM MULLION LENGTH (IN.)	MAXIMUM LOAD WIDTH (IN.)	ALLOWABLE PRESSURE (PSF)								
		4X1X1/8 TUBE	4X2X1/8 TUBE	4X2X1/4 OR 5X2X1/8 TUBE	5X2X1/4 TUBE	CONNECTION TYPES				
						"A"	"B"	"C"	"D"	"E"
42	72	85.0	85.0	85.0	85.0	63.9	85.0	85.0	85.0	85.0
48	60	85.0	85.0	85.0	85.0	67.1	85.0	85.0	85.0	85.0
	66	85.0	85.0	85.0	85.0	61.0	85.0	85.0	85.0	85.0
	72	85.0	85.0	85.0	85.0	56.0	85.0	85.0	85.0	85.0
54	54	85.0	85.0	85.0	85.0	66.3	85.0	85.0	85.0	85.0
	60	85.0	85.0	85.0	85.0	59.7	85.0	85.0	85.0	85.0
	66	85.0	85.0	85.0	85.0	54.3	85.0	85.0	85.0	85.0
	72	83.9	85.0	85.0	85.0	49.7	85.0	85.0	85.0	85.0
	78	77.4	85.0	85.0	85.0	45.9	85.0	85.0	85.0	85.0
	84	71.9	85.0	85.0	85.0	42.6	85.0	85.0	85.0	85.0
60	48	85.0	85.0	85.0	85.0	67.1	85.0	85.0	85.0	85.0
	54	85.0	85.0	85.0	85.0	59.7	85.0	85.0	85.0	85.0
	60	81.5	85.0	85.0	85.0	53.7	85.0	85.0	85.0	85.0
	66	74.1	85.0	85.0	85.0	48.8	85.0	85.0	85.0	85.0
	72	67.9	85.0	85.0	85.0	44.8	85.0	85.0	85.0	85.0
	78	62.7	85.0	85.0	85.0	41.3	82.6	85.0	85.0	85.0
	84	58.2	85.0	85.0	85.0	38.4	76.7	85.0	85.0	85.0
	90	54.3	79.4	85.0	85.0	35.8	71.6	85.0	85.0	85.0
66	36	85.0	85.0	85.0	85.0	81.4	85.0	85.0	85.0	85.0
	42	85.0	85.0	85.0	85.0	69.8	85.0	85.0	85.0	85.0
	48	84.2	85.0	85.0	85.0	61.0	85.0	85.0	85.0	85.0
	54	74.9	85.0	85.0	85.0	54.3	85.0	85.0	85.0	85.0
	60	67.4	85.0	85.0	85.0	48.8	85.0	85.0	85.0	85.0
	66	61.2	85.0	85.0	85.0	44.4	85.0	85.0	85.0	85.0
	72	56.1	82.0	85.0	85.0	40.7	81.4	85.0	85.0	85.0
	78	51.8	75.7	85.0	85.0	37.6	75.1	85.0	85.0	85.0
	84	48.1	70.3	85.0	85.0	34.9	69.8	85.0	84.5	85.0
	90	44.9	65.6	85.0	85.0	32.6	65.1	83.1	78.8	85.0
72	36	85.0	85.0	85.0	85.0	74.6	85.0	85.0	85.0	85.0
	42	80.6	85.0	85.0	85.0	63.9	85.0	85.0	85.0	85.0
	48	70.6	85.0	85.0	85.0	56.0	85.0	85.0	85.0	85.0
	54	62.7	85.0	85.0	85.0	49.7	85.0	85.0	85.0	85.0
	60	56.4	82.5	85.0	85.0	44.8	85.0	85.0	85.0	85.0
	66	51.3	75.0	85.0	85.0	40.7	81.4	85.0	85.0	85.0
	72	47.0	68.7	85.0	85.0	37.3	74.6	85.0	85.0	85.0
	78	43.4	63.4	85.0	85.0	34.4	68.9	85.0	83.4	85.0
	84	40.3	58.9	82.6	85.0	32.0	63.9	81.6	77.4	85.0
	90	37.6	55.0	77.1	85.0	29.8	59.7	76.2	72.3	85.0
78	36	74.0	85.0	85.0	85.0	68.9	85.0	85.0	85.0	85.0
	42	63.4	85.0	85.0	85.0	59.0	85.0	85.0	85.0	85.0
	48	55.5	81.1	85.0	85.0	51.6	85.0	85.0	85.0	85.0
	54	49.3	72.1	85.0	85.0	45.9	85.0	85.0	85.0	85.0
	60	44.4	64.9	85.0	85.0	41.3	82.6	85.0	85.0	85.0
	66	40.4	59.0	85.0	85.0	37.6	75.1	85.0	85.0	85.0
	72	37.0	54.0	82.1	85.0	34.4	68.9	85.0	83.4	85.0
	78	34.1	49.9	75.8	85.0	31.8	63.6	81.1	77.0	85.0
	84	31.7	46.3	70.4	85.0	29.5	59.0	75.4	71.5	85.0
	90	29.6	43.2	65.7	85.0	27.5	55.1	70.3	66.7	85.0

INSTRUCTIONS FOR TABLE USE:

1. DETERMINE REQUIRED WIND PRESSURE FOR THE OPENING.
2. DETERMINE THE MULLION LENGTH & LOAD WIDTH USING THE APPLICABLE ELEVATION ON SHEETS 1 & 2.
3. CHOOSE A TUBE SIZE THAT MEETS OR EXCEEDS THE REQUIRED PRESSURE FOR THE APPLICABLE MULLION LENGTH & LOAD WIDTH CONDITIONS.
4. CHOOSE A CONNECTION TYPE THAT MEETS OR EXCEEDS THE REQUIRED PRESSURE FOR THE APPLICABLE MULLION LENGTH & LOAD WIDTH CONDITIONS.

LOAD TABLE 2.0 (CONT.)

MAXIMUM MULLION LENGTH (IN.)	MAXIMUM LOAD WIDTH (IN.)	ALLOWABLE PRESSURE (PSF)								
		4X1X1/8 TUBE	4X2X1/8 TUBE	4X2X1/4 OR 5X2X1/8 TUBE	5X2X1/4 TUBE	CONNECTION TYPES				
						"A"	"B"	"C"	"D"	"E"
84	36	59.2	85.0	85.0	85.0	63.9	85.0	85.0	85.0	85.0
	42	50.8	74.2	85.0	85.0	54.8	85.0	85.0	85.0	85.0
	48	44.4	64.9	85.0	85.0	48.0	85.0	85.0	85.0	85.0
	54	39.5	57.7	85.0	85.0	42.6	85.0	85.0	85.0	85.0
	60	35.5	51.9	85.0	85.0	38.4	76.7	85.0	85.0	85.0
	66	32.3	47.2	77.3	85.0	34.9	69.8	85.0	84.5	85.0
	72	29.6	43.3	70.8	85.0	32.0	63.9	81.6	77.4	85.0
	78	27.3	39.9	65.4	85.0	29.5	59.0	75.4	71.5	85.0
	84	N/A	37.1	60.7	85.0	27.4	54.8	70.0	66.4	85.0
	90	N/A	34.6	56.7	85.0	25.6	51.2	65.3	61.9	85.0
90	42	41.3	60.3	85.0	85.0	51.2	85.0	85.0	85.0	85.0
	48	36.1	52.8	85.0	85.0	44.8	85.0	85.0	85.0	85.0
	54	32.1	46.9	82.0	85.0	39.8	79.6	85.0	85.0	85.0
	60	28.9	42.2	73.8	85.0	35.8	71.6	85.0	85.0	85.0
	66	26.3	38.4	67.1	85.0	32.6	65.1	83.1	78.8	85.0
	72	N/A	35.2	61.5	85.0	29.8	59.7	76.2	72.3	85.0
	78	N/A	32.5	56.8	85.0	27.5	55.1	70.3	66.7	85.0
	84	N/A	30.2	52.7	85.0	25.6	51.2	65.3	61.9	85.0
	90	N/A	28.1	49.2	85.0	23.9	47.7	61.0	57.8	85.0
96	42	34.0	49.7	85.0	85.0	48.0	85.0	85.0	85.0	85.0
	48	29.8	43.5	76.0	85.0	42.0	83.9	85.0	85.0	85.0
	54	26.5	38.7	67.6	85.0	37.3	74.6	85.0	85.0	85.0
	60	N/A	34.8	60.8	85.0	33.6	67.1	85.0	81.3	85.0
	66	N/A	31.6	55.3	85.0	30.5	61.0	77.9	73.9	85.0
	72	N/A	29.0	50.7	85.0	28.0	56.0	71.4	67.7	85.0
	78	N/A	26.8	46.8	84.9	25.8	51.6	65.9	62.5	85.0
	84	N/A	N/A	43.5	78.8	24.0	48.0	61.2	58.1	85.0
	90	N/A	N/A	40.6	73.6	22.4	44.8	57.1	54.2	85.0
102	42	28.4	41.4	72.5	85.0	45.1	85.0	85.0	85.0	85.0
	48	24.8	36.3	63.4	85.0	39.5	79.0	85.0	85.0	85.0
	54	N/A	32.2	56.4	85.0	35.1	70.2	85.0	85.0	85.0
	60	N/A	29.0	50.7	85.0	31.6	63.2	80.7	76.5	85.0
	66	N/A	26.4	46.1	83.7	28.7	57.4	73.3	69.5	85.0
	72	N/A	N/A	42.3	76.7	26.3	52.7	67.2	63.8	85.0
	78	N/A	N/A	39.0	70.8	24.3	48.6	62.1	58.8	85.0
	84	N/A	N/A	36.2	65.7	22.6	45.1	57.6	54.6	85.0
	90	N/A	N/A	33.8	61.4	21.1	42.1	53.8	51.0	82.8

TABLE NOTES:

1. ALL TUBES SHALL BE MIN. 6063–T6 ALUMINUM.
2. FOR ALL CONNECTION TYPES, SEE SHEETS 3, 4 & 5 FOR DETAIL.
3. INDIVIDUAL UNIT SIZES & SHUTTER REQUIREMENTS ARE LIMITED BY THEIR OWN INDIVIDUAL "CERTIFICATION".
4. IN ORDER TO SIMPLIFY TABLES, TABLE PRESSURES ARE LIMITED TO 85 PSF. USE OF THESE MULLIONS FOR PRESSURES HIGHER THAN 85 PSF SHALL BE REVIEWED UNDER SEPERATE APPROVAL.
5. THESE LOAD TABLES ARE CERTIFIED AS CORRECT IN CONTENT. HOWEVER, CHOOSING OF THE CORRECT MULLION & CONNECTION FROM THESE TABLES FOR ITS SPECIFIC USE IS THE RESPONSIBILITY OF THOSE USING THE TABLES AND SHOULD BE VERIFIED BY THE BUILDING OFFICIAL OR A FLORIDA CERTIFIED ENGINEER.
6. "N/A" DESIGNATES A SIZE NOT APPLICABLE TO THAT SIZE OPTION.

PRODUCT REVISED
as complying with the Florida Building Code
Acceptance No 11-1026.05
Expiration Date Oct. 30, 2013
By
Miami Dade Product Control

PRODUCT RENEWED
as complying with the Florida Building Code
Acceptance No 13-0205.17
Expiration Date 10/30/2018
By
Miami Dade Product Control

WARREN W. SCHAEFER LICENSE No. 44135 STATE OF FLORIDA PROFESSIONAL ENGINEER

NO.	REVISION DESCRIPTION	BY	DATE
A4	REVISED CONN. "F" LOADS	K.P.S.	08/12/05
A5	DELETED TABLE NOTE 5	K.P.S.	08/12/05

DRAWN BY: K.P.S. | CHECKED BY: W.W.S.
PLOT: 1=1 | DATE: 05/07/03

DRAWING TITLE: ALUMINUM TUBE CLIPPED MULLIONS

MANUFACTURER: MARVIN WINDOWS & DOORS
HIGHWAY 11 WEST
WARROAD, MN 56763–0100
218–386–1430

CONSULTANTS: W. W. SCHAEFER ENGINEERING & CONSULTING, P.A. (CA 6809)
7480 150TH COURT NORTH
PALM BEACH GARDENS, FL 33418
PHONE: 561–744–3424

CERTIFICATION: OCT 14 2011
WARREN W. SCHAEFER, P.E.
P.E. NO. 44135

DRAWING NO. 1223 | REV. C
SHEET NO. 7 OF 8

LOAD TABLE 3.0

MAXIMUM MULLION LENGTH (IN.)	MAXIMUM LOAD WIDTH (IN.)	ALLOWABLE PRESSURE (PSF)								
		4X1X1/8 TUBE	4X2X1/8 TUBE	4X2X1/4 OR 5X2X1/8 TUBE	5X2X1/4 TUBE	CONNECTION TYPES				
						"A"	"B"	"C"	"D"	"E"
36	60	85.0	85.0	85.0	85.0	62.7	85.0	85.0	85.0	85.0
	66	85.0	85.0	85.0	85.0	57.0	85.0	85.0	85.0	85.0
	72	85.0	85.0	85.0	85.0	52.2	85.0	85.0	85.0	85.0
42	48	85.0	85.0	85.0	85.0	67.1	85.0	85.0	85.0	85.0
	54	85.0	85.0	85.0	85.0	59.7	85.0	85.0	85.0	85.0
	60	85.0	85.0	85.0	85.0	53.7	85.0	85.0	85.0	85.0
	66	85.0	85.0	85.0	85.0	48.8	85.0	85.0	85.0	85.0
	72	85.0	85.0	85.0	85.0	44.8	85.0	85.0	85.0	85.0
48	42	85.0	85.0	85.0	85.0	67.1	85.0	85.0	85.0	85.0
	48	85.0	85.0	85.0	85.0	58.8	85.0	85.0	85.0	85.0
	54	85.0	85.0	85.0	85.0	52.2	85.0	85.0	85.0	85.0
	60	85.0	85.0	85.0	85.0	47.0	85.0	85.0	85.0	85.0
	66	85.0	85.0	85.0	85.0	42.7	85.0	85.0	85.0	85.0
	72	85.0	85.0	85.0	85.0	39.2	78.3	85.0	85.0	85.0
54	36	85.0	85.0	85.0	85.0	69.6	85.0	85.0	85.0	85.0
	42	85.0	85.0	85.0	85.0	59.7	85.0	85.0	85.0	85.0
	48	85.0	85.0	85.0	85.0	52.2	85.0	85.0	85.0	85.0
	54	85.0	85.0	85.0	85.0	46.4	85.0	85.0	85.0	85.0
	60	85.0	85.0	85.0	85.0	41.8	83.6	85.0	85.0	85.0
	66	85.0	85.0	85.0	85.0	38.0	76.0	85.0	85.0	85.0
	72	83.9	85.0	85.0	85.0	34.8	69.6	85.0	84.3	85.0
60	36	85.0	85.0	85.0	85.0	62.7	85.0	85.0	85.0	85.0
	42	85.0	85.0	85.0	85.0	53.7	85.0	85.0	85.0	85.0
	48	85.0	85.0	85.0	85.0	47.0	85.0	85.0	85.0	85.0
	54	85.0	85.0	85.0	85.0	41.8	83.6	85.0	85.0	85.0
	60	81.5	85.0	85.0	85.0	37.6	75.2	85.0	85.0	85.0
	66	74.1	85.0	85.0	85.0	34.2	68.4	85.0	82.8	85.0
	72	67.9	85.0	85.0	85.0	31.3	62.7	80.0	75.9	85.0
	78	62.7	85.0	85.0	85.0	28.9	57.8	73.8	70.0	85.0
	84	58.2	85.0	85.0	85.0	26.9	53.7	68.6	65.0	85.0
66	30	85.0	85.0	85.0	85.0	68.4	85.0	85.0	85.0	85.0
	36	85.0	85.0	85.0	85.0	57.0	85.0	85.0	85.0	85.0
	42	85.0	85.0	85.0	85.0	48.8	85.0	85.0	85.0	85.0
	48	84.2	85.0	85.0	85.0	42.7	85.0	85.0	85.0	85.0
	54	74.9	85.0	85.0	85.0	38.0	76.0	85.0	85.0	85.0
	60	67.4	85.0	85.0	85.0	34.2	68.4	85.0	82.8	85.0
	66	61.2	85.0	85.0	85.0	31.1	62.1	79.3	75.2	85.0
	72	56.1	82.0	85.0	85.0	28.5	57.0	72.7	69.0	85.0
	78	51.8	75.7	85.0	85.0	26.3	52.6	67.1	63.7	85.0
	84	48.1	70.3	85.0	85.0	24.4	48.8	62.3	59.1	85.0
72	30	85.0	85.0	85.0	85.0	62.7	85.0	85.0	85.0	85.0
	36	85.0	85.0	85.0	85.0	52.2	85.0	85.0	85.0	85.0
	42	80.6	85.0	85.0	85.0	44.8	85.0	85.0	85.0	85.0
	48	70.6	85.0	85.0	85.0	39.2	78.3	85.0	85.0	85.0
	54	62.7	85.0	85.0	85.0	34.8	69.6	85.0	84.3	85.0
	60	56.4	82.5	85.0	85.0	31.3	62.7	80.0	75.9	85.0
	66	51.3	75.0	85.0	85.0	28.5	57.0	72.7	69.0	85.0
	72	47.0	68.7	85.0	85.0	26.1	52.2	66.7	63.2	85.0
	78	43.4	63.4	85.0	85.0	24.1	48.2	61.5	58.4	85.0
	84	40.3	58.9	82.6	85.0	22.4	44.8	57.1	54.2	85.0
	90	37.6	55.0	77.1	85.0	20.9	41.8	53.3	50.6	82.1
78	30	85.0	85.0	85.0	85.0	57.8	85.0	85.0	85.0	85.0
	36	74.0	85.0	85.0	85.0	48.2	85.0	85.0	85.0	85.0
	42	63.4	85.0	85.0	85.0	41.3	82.6	85.0	85.0	85.0
	48	55.5	81.1	85.0	85.0	36.2	72.3	85.0	85.0	85.0
	54	49.3	72.1	85.0	85.0	32.1	64.3	82.1	77.8	85.0
	60	44.4	64.9	85.0	85.0	28.9	57.8	73.8	70.0	85.0
	66	40.4	59.0	85.0	85.0	26.3	52.6	67.1	63.7	85.0
	72	37.0	54.0	82.1	85.0	24.1	48.2	61.5	58.4	85.0
	78	34.1	49.9	75.8	85.0	22.2	44.5	56.8	53.9	85.0
	84	31.7	46.3	70.4	85.0	20.7	41.3	52.7	50.0	81.2
	90	29.6	43.2	65.7	85.0	19.3	38.6	49.2	46.7	75.8
84	30	71.1	85.0	85.0	85.0	53.7	85.0	85.0	85.0	85.0
	36	59.2	85.0	85.0	85.0	44.8	85.0	85.0	85.0	85.0
	42	50.8	74.2	85.0	85.0	38.4	76.7	85.0	85.0	85.0
	48	44.4	64.9	85.0	85.0	33.6	67.1	85.0	81.3	85.0
	54	39.5	57.7	85.0	85.0	29.8	59.7	76.2	72.3	85.0
	60	35.5	51.9	85.0	85.0	26.9	53.7	68.6	65.0	85.0
	66	32.3	47.2	77.3	85.0	24.4	48.8	62.3	59.1	85.0
	72	29.6	43.3	70.8	85.0	22.4	44.8	57.1	54.2	85.0
	78	27.3	39.9	65.4	85.0	20.7	41.3	52.7	50.0	81.2
	84	N/A	37.1	60.7	85.0	19.2	38.4	49.0	46.4	75.4
	90	N/A	34.6	56.7	85.0	17.9	35.8	45.7	43.4	70.4

LOAD TABLE 3.0

MAXIMUM MULLION LENGTH (IN.)	MAXIMUM LOAD WIDTH (IN.) A+B	ALLOWABLE PRESSURE (PSF)								
		4X1X1/8 TUBE	4X2X1/8 TUBE	4X2X1/4 OR 5X2X1/8 TUBE	5X2X1/4 TUBE	CONNECTION TYPES				
						"A"	"B"	"C"	"D"	"E"
90	30	57.8	84.4	85.0	85.0	50.1	85.0	85.0	85.0	85.0
	36	48.2	70.4	85.0	85.0	41.8	83.6	85.0	85.0	85.0
	42	41.3	60.3	85.0	85.0	35.8	71.6	85.0	85.0	85.0
	48	36.1	52.8	85.0	85.0	31.3	62.7	80.0	75.9	85.0
	54	32.1	46.9	82.0	85.0	27.9	55.7	71.1	67.4	85.0
	60	28.9	42.2	73.8	85.0	25.1	50.1	64.0	60.7	85.0
	66	26.3	38.4	67.1	85.0	22.8	45.6	58.2	55.2	85.0
	72	N/A	35.2	61.5	85.0	20.9	41.8	53.3	50.6	82.1
	78	N/A	32.5	56.8	85.0	19.3	38.6	49.2	46.7	75.8
	84	N/A	30.2	52.7	85.0	17.9	35.8	45.7	43.4	70.4
	90	N/A	28.1	49.2	85.0	16.7	33.4	42.7	40.5	65.7
96	30	47.6	69.6	85.0	85.0	47.0	85.0	85.0	85.0	85.0
	36	39.7	58.0	85.0	85.0	39.2	78.3	85.0	85.0	85.0
	42	34.0	49.7	85.0	85.0	33.6	67.1	85.0	81.3	85.0
	48	29.8	43.5	76.0	85.0	29.4	58.8	75.0	71.1	85.0
	54	26.5	38.7	67.6	85.0	26.1	52.2	66.7	63.2	85.0
	60	N/A	34.8	60.8	85.0	23.5	47.0	60.0	56.9	85.0
	66	N/A	31.6	55.3	85.0	21.4	42.7	54.5	51.7	84.0
	72	N/A	29.0	50.7	85.0	19.6	39.2	50.0	47.4	77.0
	78	N/A	N/A	46.8	84.9	18.1	36.2	46.2	43.8	71.1
	84	N/A	N/A	43.5	78.8	16.8	33.6	42.9	40.6	66.0
	90	N/A	N/A	40.6	73.6	15.7	31.3	40.0	37.9	61.6
108	30	33.4	48.9	85.0	85.0	41.8	83.6	85.0	85.0	85.0
	36	27.9	40.7	71.2	85.0	34.8	69.6	85.0	84.3	85.0
	42	N/A	34.9	61.0	85.0	29.8	59.7	76.2	72.3	85.0
	48	N/A	30.5	53.4	85.0	26.1	52.2	66.7	63.2	85.0
	54	N/A	27.1	47.5	85.0	23.2	46.4	59.3	56.2	85.0
	60	N/A	N/A	42.7	77.5	20.9	41.8	53.3	50.6	82.1
	66	N/A	N/A	38.8	70.5	19.0	38.0	48.5	46.0	74.7
	72	N/A	N/A	35.6	64.6	17.4	34.8	44.4	42.1	68.4
	78	N/A	N/A	32.9	59.6	16.1	32.1	41.0	38.9	63.2
	84	N/A	N/A	30.5	55.4	14.9	29.8	38.1	36.1	58.7
	90	N/A	N/A	28.5	51.7	13.9	27.9	35.6	33.7	54.8
120	30	N/A	35.6	62.3	85.0	37.6	75.2	85.0	85.0	85.0
	36	N/A	29.7	51.9	85.0	31.3	62.7	80.0	75.9	85.0
	42	N/A	25.4	44.5	80.7	26.9	53.7	68.6	65.0	85.0
	48	N/A	N/A	38.9	70.6	23.5	47.0	60.0	56.9	85.0
	54	N/A	N/A	34.6	62.8	20.9	41.8	53.3	50.6	82.1
	60	N/A	N/A	31.1	56.5	18.8	37.6	48.0	45.5	73.9
	66	N/A	N/A	28.3	51.4	17.1	34.2	43.6	41.4	67.2
	72	N/A	N/A	N/A	47.1	15.7	31.3	40.0	37.9	61.6
	78	N/A	N/A	N/A	43.5	14.5	28.9	36.9	35.0	56.9
	84	N/A	N/A	N/A	40.4	13.4	26.9	34.3	32.5	52.8
	90	N/A	N/A	N/A	37.7	12.5	25.1	32.0	30.3	49.3
132	30	N/A	N/A	46.8	84.9	34.2	68.4	85.0	82.8	85.0
	36	N/A	N/A	39.0	70.8	28.5	57.0	72.7	69.0	85.0
	42	N/A	N/A	33.4	60.7	24.4	48.8	62.3	59.1	85.0
	48	N/A	N/A	29.3	53.1	21.4	42.7	54.5	51.7	84.0
	54	N/A	N/A	N/A	47.2	19.0	38.0	48.5	46.0	74.7
	60	N/A	N/A	N/A	42.5	17.1	34.2	43.6	41.4	67.2
	66	N/A	N/A	N/A	38.6	15.5	31.1	39.7	37.6	61.1
	72	N/A	N/A	N/A	35.4	14.2	28.5	36.4	34.5	56.0
	78	N/A	N/A	N/A	32.7	13.1	26.3	33.6	31.8	51.7
	84	N/A	N/A	N/A	30.3	12.2	24.4	31.2	29.6	48.0
	90	N/A	N/A	N/A	28.3	11.4	22.8	29.1	27.6	44.8
144	30	N/A	N/A	36.0	65.4	31.3	62.7	80.0	75.9	85.0
	36	N/A	N/A	30.0	54.5	26.1	52.2	66.7	63.2	85.0
	42	N/A	N/A	25.7	46.7	22.4	44.8	57.1	54.2	85.0
	48	N/A	N/A	N/A	40.9	19.6	39.2	50.0	47.4	77.0
	54	N/A	N/A	N/A	36.3	17.4	34.8	44.4	42.1	68.4
	60	N/A	N/A	N/A	32.7	15.7	31.3	40.0	37.9	61.6
	66	N/A	N/A	N/A	29.7	14.2	28.5	36.4	34.5	56.0
152	30	N/A	N/A	N/A	55.6	29.7	59.4	75.8	71.9	85.0
	36	N/A	N/A	N/A	46.3	24.7	49.5	63.2	59.9	85.0
	42	N/A	N/A	N/A	39.7	21.2	42.4	54.1	51.3	83.4
	48	N/A	N/A	N/A	34.8	18.6	37.1	47.4	44.9	72.9
	54	N/A	N/A	N/A	30.9	16.5	33.0	42.1	39.9	64.8
164	30	N/A	N/A	N/A	44.3	27.5	55.0	70.2	66.6	85.0
	36	N/A	N/A	N/A	36.9	22.9	45.9	58.5	55.5	85.0
	42	N/A	N/A	N/A	31.6	19.7	39.3	50.2	47.6	77.3
	48	N/A	N/A	N/A	27.7	17.2	34.4	43.9	41.6	67.6

TABLE NOTES:

1. ALL TUBES SHALL BE MIN. 6063-T6 ALUMINUM.
2. FOR ALL CONNECTION TYPES, SEE SHEETS 3, 4 & 5 FOR DETAIL.
3. INDIVIDUAL UNIT SIZES & SHUTTER REQUIREMENTS ARE LIMITED BY THEIR OWN INDIVIDUAL "CERTIFICATION".
4. IN ORDER TO SIMPLIFY TABLES, TABLE PRESSURES ARE LIMITED TO 85 PSF. USE OF THESE MULLIONS FOR PRESSURES HIGHER THAN 85 PSF SHALL BE REVIEWED UNDER SEPERATE APPROVAL.
5. THESE LOAD TABLES ARE CERTIFIED AS CORRECT IN CONTENT. HOWEVER, CHOOSING OF THE CORRECT MULLION & CONNECTION FROM THESE TABLES FOR ITS SPECIFIC USE IS THE RESPONSIBILITY OF THOSE USING THE TABLES AND SHOULD BE VERIFIED BY THE BUILDING OFFICIAL OR A FLORIDA CERTIFIED ENGINEER.
6. "N/A" DESIGNATES A SIZE NOT APPLICABLE TO THAT SIZE OPTION.

INSTRUCTIONS FOR TABLE USE:

1. DETERMINE REQUIRED WIND PRESSURE FOR THE OPENING.
2. DETERMINE THE MULLION LENGTH & LOAD WIDTH USING THE APPLICABLE ELEVATION ON SHEETS 1 & 2.
3. CHOOSE A TUBE SIZE THAT MEETS OR EXCEEDS THE REQUIRED PRESSURE FOR THE APPLICABLE MULLION LENGTH & LOAD WIDTH CONDITIONS.
4. CHOOSE A CONNECTION TYPE THAT MEETS OR EXCEEDS THE REQUIRED PRESSURE FOR THE APPLICABLE MULLION LENGTH & LOAD WIDTH CONDITIONS.

PRODUCT REVISED
as complying with the Florida
Building Code
Acceptance No 11-1026.05
Expiration Date Oct. 30, 2013
By Miami Dade Product Control

PRODUCT RENEWED
as complying with the Florida
Building Code
Acceptance No 13-0205.17
Expiration Date 10/30/2018
By Miami Dade Product Control

WARREN W. SCHAEFER LICENSE No. 44135 STATE OF FLORIDA PROFESSIONAL ENGINEER

NO.	REVISION DESCRIPTION	BY	DATE
A4	REVISED CONN. "F" LOADS	K.P.S.	08/12/05
A5	DELETED TABLE NOTE 5	K.P.S.	08/12/05

DRAWN BY: K.P.S. | CHECKED BY: W.W.S.
PLOT: 1=1 | DATE: 05/07/03

DRAWING TITLE: ALUMINUM TUBE CLIPPED MULLIONS

MANUFACTURER: MARVIN WINDOWS & DOORS
HIGHWAY 11 WEST
WARROAD, MN 56763-0100
218-386-1430

CONSULTANTS: W. W. SCHAEFER ENGINEERING & CONSULTING, P.A. (CA 6809)
7480 150TH COURT NORTH
PALM BEACH GARDENS, FL 33418
PHONE: 561-744-3424

CERTIFICATION: OCT 14 2011
WARREN W. SCHAEFER, P.E.
P.E. NO. 44135

DRAWING NO. 1223 | REV. C
SHEET NO. 8 OF 8