MIAMI-DADE COUNTY
DEPARTMENT OF REGULATORY AND ECONOMIC RESOURCES (RER)
BOARD AND CODE ADMINISTRATION DIVISION

MIAMI–DADE COUNTY, FLORIDA
PRODUCT CONTROL SECTION
11805 SW 26 Street, Room 208
T (786) 315–2590 F (786) 315–2599
www.miamidade.gov/economy

NOTICE OF ACCEPTANCE (NOA)

Sol–A–Trol Aluminum Products, Inc.
4101 NW 132nd Street
Opa Locka, FL 33054

SCOPE:

This NOA is being issued under the applicable rules and regulations governing the use of construction materials. The documentation submitted has been reviewed and accepted by Miami–Dade County RER–Product Control Section to be used in Miami–Dade County and other areas where allowed by the Authority Having Jurisdiction (AHJ).

This NOA shall not be valid after the expiration date stated below. The Miami–Dade County Product Control Section (In Miami–Dade County) and/ or the AHJ (in areas other than Miami–Dade County) reserve the right to have this product or material tested for quality assurance purposes. If this product or material fails to perform in the accepted manner, the manufacturer will incur the expense of such testing and the AHJ may immediately revoke, modify, or suspend the use of such product or material within their jurisdiction. RER reserves the right to revoke this acceptance, if it is determined by Miami–Dade County Product Control Section that this product or material fails to meet the requirements of the applicable building code.

This product is approved as described herein, and has been designed to comply with the Florida Building Code, including the High Velocity Hurricane Zone.

DESCRIPTION: Series Aluminum Tube Mullion – L.M.I.

APPROVAL DOCUMENT: Drawing No. **M08-6**, titled "Aluminum Tube Mullion", sheets 01 through 08 of 08, dated 11/20/08, with revision "**C**" dated 02/13/13, prepared by Al–Farooq Corporation, signed and sealed by Javad Ahmad, P. E., bearing the Miami–Dade County Product Control Section Revision stamp with the Notice of Acceptance number and Expiration date by the Miami–Dade County Product Control Section.

MISSILE IMPACT RATING: Large and Small Missile Impact Resistant

LABELING: Each unit shall bear a permanent label with the manufacturer's name or logo, city, state, model/series, and following statement: "Miami–Dade County Product Control Approved", unless otherwise noted herein.

RENEWAL of this NOA shall be considered after a renewal application has been filed and there has been no change in the applicable building code negatively affecting the performance of this product.

TERMINATION of this NOA will occur after the expiration date or if there has been a revision or change in the materials, use, and/or manufacture of the product or process. Misuse of this NOA as an endorsement of any product, for sales, advertising or any other purposes shall automatically terminate this NOA. Failure to comply with any section of this NOA shall be cause for termination and removal of NOA.

ADVERTISEMENT: The NOA number preceded by the words Miami–Dade County, Florida, and followed by the expiration date may be displayed in advertising literature. If any portion of the NOA is displayed, then it shall be done in its entirety.

INSPECTION: A copy of this entire NOA shall be provided to the user by the manufacturer or its distributors and shall be available for inspection at the job site at the request of the Building Official.

This NOA **revises NOA No. 10–0719.14** and consists of this page 1 and evidence pages E–1 and E–2, as well as approval document mentioned above.

The submitted documentation was reviewed by **Jaime D. Gascon, P. E.**

MIAMI-DADE COUNTY APPROVED

J. Gascon 5/2/13

Sol–A–Trol Aluminum Products, Inc.

NOTICE OF ACCEPTANCE: EVIDENCE SUBMITTED

A. DRAWINGS

1. Manufacturer's die drawings and sections.
   (Submitted under previous NOA No. 09–0518.06)
2. Drawing No. **W08-6**, titled "Aluminum Tube Mullion", sheets 01 through 08 of 08, dated 11/20/08, with revision "**C**" dated 02/13/13, prepared by Al–Farooq Corporation, signed and sealed by Javad Ahmad, P. E.

B. TESTS

1. Test reports on: 1) Air Infiltration Test, per FBC, TAS 202–94
   2) Uniform Static Air Pressure Test, Loading per FBC, TAS 202–94
   3) Water Resistance Test, per FBC, TAS 202–94
   4) Forced Entry Test, per FBC 2411.3.2.1 (b) and TAS 202–94

   along with marked–up drawings and installation diagram of mulled aluminum fixed/ casement window, prepared by Hurricane Engineering & Testing, Inc., Test Reports No.'s **HETI–08–2153A** and **HETI–08–2089A**, both dated 07/25/08, signed and sealed by Candido F. Font, P. E.
   (Submitted under previous NOA No. 09–0518.06)
2. Test reports on: 1) Air Infiltration Test, per FBC, TAS 202–94
   2) Uniform Static Air Pressure Test, Loading per FBC, TAS 202–94
   3) Water Resistance Test, per FBC, TAS 202–94

   along with marked–up drawings and installation diagram of mulled aluminum fixed/ casement window, prepared by Hurricane Engineering & Testing, Inc., Test Reports No.'s **HETI–07–4389** and **HETI–07–4388**, both dated 02/20/08, signed and sealed by Candido F. Font, P. E.
   (Submitted under previous NOA No. 09–0518.06)
3. Test reports on: 1) Large Missile Impact Test, per FBC, TAS 202–94
   2) Cyclic Wind Pressure Loading per FBC, TAS 202–94

   along with marked–up drawings and installation diagram of mulled aluminum window, prepared by Hurricane Engineering & Testing Inc., Test Reports No.'s **HETI–07–4396, HETI–07–4397, HETI–08–2153B** and **HETI–08–2089B,** all dated 02/21/08, 07/25/08, and 02/20/08, signed and sealed by Candido F. Font, P. E.
   (Submitted under previous NOA No. 09–0518.06)

C. CALCULATIONS

1. Anchor verification calculations and structural analysis, complying with FBC, prepared by Al–Farooq Corporation, dated 09/20/10, signed and sealed by Javad Ahmad, P. E.
   (Submitted under previous NOA No. 10–0719.14)
2. **Glazing complies with ASTM E1300–04**

Jaime D. Gascon, P. E.
Product Control Section Supervisor
NOA No. 13–0206.10
Expiration Date: October 20, 2015
Approval Date: May 09, 2013

NOTICE OF ACCEPTANCE: EVIDENCE SUBMITTED

D. QUALITY ASSURANCE

1. Miami–Dade Department of Regulatory and Economic Resources (RER).

E. MATERIAL CERTIFICATIONS

1. None.

F. STATEMENTS

1. Statement letter of no financial interest, conformance and complying with **FBC–2010**, issued by Al–Farooq Corporation, dated 07/19/13, signed and sealed by Javad Ahmad, P. E.
2. Department of State Certification of **Sol–A–Trol Aluminum Products, Inc.** as a for profit corporation, active and organized under the laws of the State of Florida, dated 12/28/06 and signed by Kurt S. Browning, Secretary of State.
   (Submitted under previous NOA No. 09–0518.06)
3. Laboratory compliance letter for Test Reports No.'s **HETI–08–2153A, HETI–07–4396, HETI–07–4397, HETI–07–4396, HETI–07–4397, HETI–08–2089A, HETI–08–2153B** and **HETI–08–2089B,** prepared by Hurricane Engineering & Testing, Inc., all dated 02/21/08 and 07/25/08, all signed and sealed by Candido F. Font, P. E.
   (Submitted under previous NOA No. 09–0518.06)

G. OTHERS

1. Notice of Acceptance No. **10–0719.14**, issued to Sol–A–Trol Aluminum Products, Inc. for their Series "**Aluminum Tube Mullion – L.M.I.**", approved on 10/20/10 and expiring on 10/20/15.

Jaime D. Gascon, P. E.
Product Control Section Supervisor
NOA No. 13–0206.10
Expiration Date: October 20, 2015
Approval Date: May 09, 2013

MULLION SYSTEM IS RATED FOR LARGE & SMALL MISSILE IMPACT. AND CAN BE USED WITH ALL MIAMI-DADE COUNTY APPROVED IMPACT AND NON-IMPACT RESISTANT PRODUCTS.

RECTANGULAR ALUMINUM TUBE MULLIONS USING MULLION PROPERTIES ONLY

NOTES:

THIS PRODUCT HAS BEEN DESIGNED AND TESTED TO COMPLY WITH THE REQUIREMENTS OF THE FLORIDA BUILDING CODE INCLUDING HIGH VELOCITY HURRICANE ZONE (HVHZ).

ALL GLAZING PRODUCTS USED WITH THESE MULLIONS MUST MEET THE APPLICABLE BUILDING CODE REQUIREMENTS I.E: WIND LOAD, WATER INFILTRATION, FORCED ENTRY RESISTANCE, SAFEGUARDS ETC.

WOOD BUCKS BY OTHERS, MUST BE ANCHORED PROPERLY TO TRANSFER LOADS TO THE STRUCTURE.

ANCHORS SHALL BE AS LISTED, SPACED AS SHOWN ON DETAILS, EMBEDMENT TO BASE MATERIAL SHALL BE BEYOND WALL COVERING (STUCCO, TILE ETC.).

ANCHORING CONDITIONS OTHER THAN THOSE SHOWN IN THESE DETAILS ARE NOT PART OF THIS APPROVAL.

A LOAD DURATION INCREASE IN ALLOWABLE STRESS IS USED IN DESIGN OF ANCHORS INTO WOOD ONLY.

MATERIALS INCLUDING BUT NOT LIMITED TO STEEL/METAL SCREWS, THAT COME INTO CONTACT WITH OTHER DISSIMILAR MATERIALS SHALL MEET THE REQUIREMENTS OF THE FLORIDA BLDG. CODE SECTION 2003.8.4.

INSTRUCTIONS:

USE CHARTS AND GRAPHS AS FOLLOWS.

STEP 1 DETERMINE DESIGN LOAD REQUIRED PER ASCE 7 FOR PARTICULAR OPENING.

STEP 2 USE APPROVED GLAZING PRODUCTS MEETING ABOVE LOAD REQUIREMENTS.

STEP 3 USE CONNECTION TO MULLION AS PER PRODUCT APPROVAL.

STEP 4 USING CHARTS ON SHEET 3 SELECT MULLION SIZE WITH DESIGN RATING MORE THAN DESIGN LOAD SPECIFIED IN STEP 1 ABOVE.

STEP 5 USING ANCHOR TYPES ON SHEET 5 THRU 7 AND ANCHOR CHARTS ON SHEET 4, SELECT ANCHOR TYPE WITH DESIGN RATING MORE THAN THE DESIGN LOADS SPECIFIED IN STEP 1 ABOVE.

LOWER VALUES FROM GLAZING PRODUCTS, MULLION CHARTS OR ANCHOR CHARTS WILL APPLY TO ENTIRE SYSTEM.

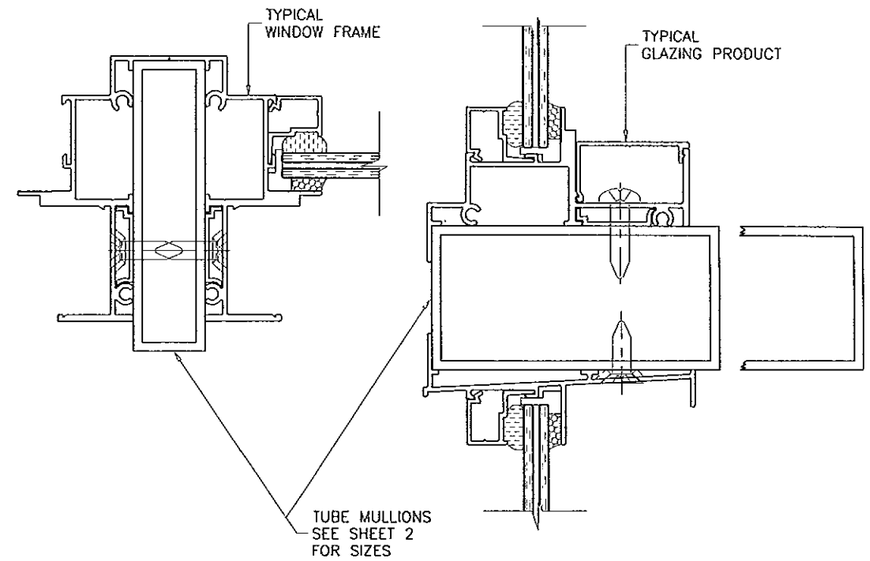

MULLIONS CONTAINING TYPICAL GLAZING PRODUCTS HORIZONTAL OR VERTICAL

NOTE: MULLIONS ATTACH 2 OR MORE WINDOWS TOGETHER

SEE WINDOW OR DOOR APPROVAL FOR FASTENERS SIZES AND SPACING

INDEX OF DRAWING

SHEET NO.	DESCRIPTION
1	GENERAL NOTES, INSTRUCTIONS AND INDEX OF DRAWINGS
2	PARTS DRAWING
3	MULLION DESIGN LOAD CAPACITY TABLE (MULLIONS M1 THRU M9)
4	DESIGN LOAD CAPACITY TABLE (ANCHORS TYPE A, B, C & D)
5	ANCHORS TYPE A1, B1, C1 AND D1 DETAILS
6	ANCHORS TYPE A2, B2, C2 AND D2 DETAILS
7	ANCHORS TYPE A3, B3, C3 AND D3 DETAILS
8	ANCHOR DETAIL 1

PRODUCT REVISED
as complying with the Florida
Building Code
Acceptance No 13-0206.10
Expiration Date 10.20.2015
By
Miami Dade Product Control

Engr: JAVAD AHMAD
CIVIL
FLA. PE # 70592
C.A.N. 3538

FEB 20 2013

AL-FAROOQ CORPORATION
ENGINEERS & PRODUCT DEVELOPMENT
1235 S.W. 87 AVE
MIAMI, FLORIDA 33174
TEL. (305) 264-8100 FAX. (305) 262-6978

MULLION\M05-08SAT

ALUMINUM TUBE MULLIONS

SOL-A-TROL ALUMINUM PRODUCTS
4101 N.W. 132ND STREET
MIAMI, FL. 33054
TEL. (305) 681-2020 FAX. (305) 681-2035

revisions:

no	date	by	description
A	09.21.10		REV. PER BCCO COMMENTS
B	07.20.12		UPDATED TO 2010 FBC
C	02.13.13	L.G.	NOTE ADDED

date: 11-20-08
scale: 1/2" = 1"
dr. by: HAMID
chk. by:

drawing no.
M08-06

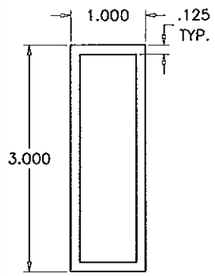

MULLION 'M1'
6063-T6

Ix IN^4	Sx IN^3
0.9500	0.6333

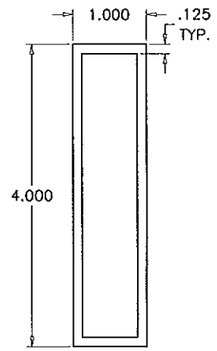

MULLION 'M2'
6063-T6

Ix IN^4	Sx IN^3
2.0370	1.0185

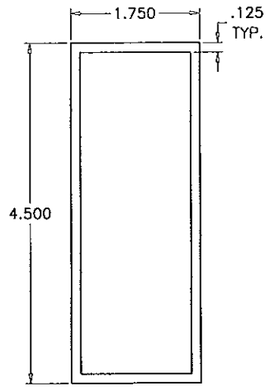

MULLION 'M3'
6063-T6

Ix IN^4	Sx IN^3
3.6930	1.6413

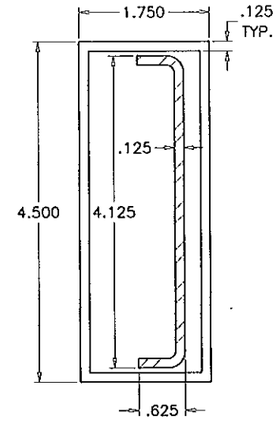

MULLION 'M4'
6063-T6

	Ix IN^4	Sx IN^3
ALUMINUM	3.6930	1.6413
STEEL	1.1477	.5565
TOTAL Ix ALUM + Ix STL X 2.9	7.0213	

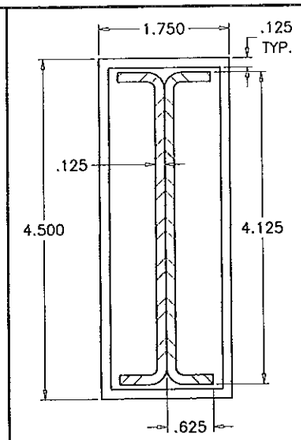

MULLION 'M5'
6063-T6

	Ix IN^4	Sx IN^3
ALUMINUM	3.6930	1.6413
STEEL	2.2954	1.1129
TOTAL Ix ALUM + Ix STL X 2.9	10.3497	

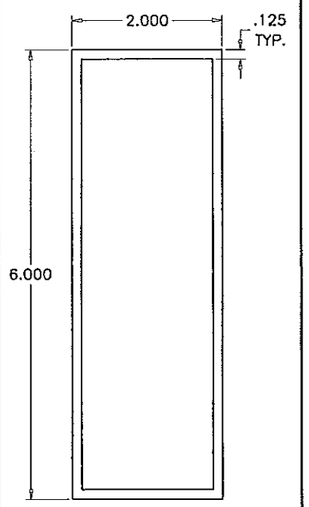

MULLION 'M6'
6063-T6

Ix IN^4	Sx IN^3
8.2757	2.7586

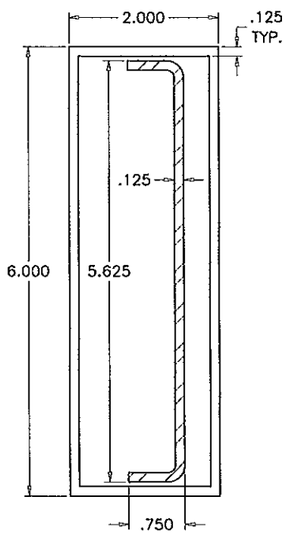

MULLION 'M7'
6063-T6

	Ix IN^4	Sx IN^3
ALUMINUM	8.2757	2.7586
STEEL	2.8793	1.0238
TOTAL Ix ALUM + Ix STL X 2.9	16.6257	

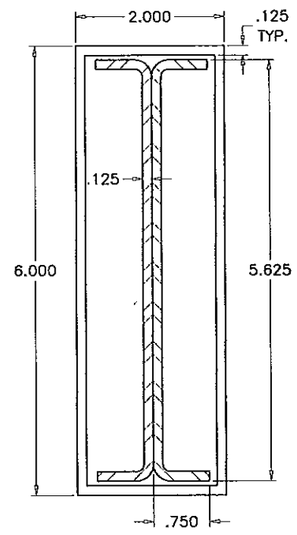

MULLION 'M8'
6063-T6

	Ix IN^4	Sx IN^3
ALUMINUM	8.2757	2.7586
STEEL	5.5786	2.0476
TOTAL Ix ALUM + Ix STL X 2.9	24.9756	

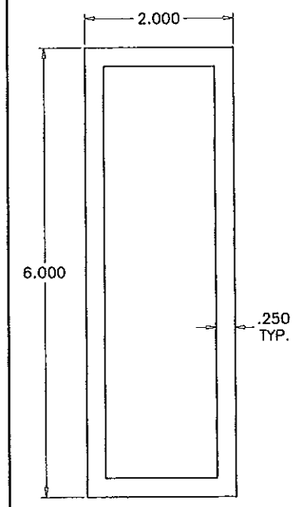

MULLION 'M9'
6063-T6

Ix IN^4	Sx IN^3
15.2030	5.0677

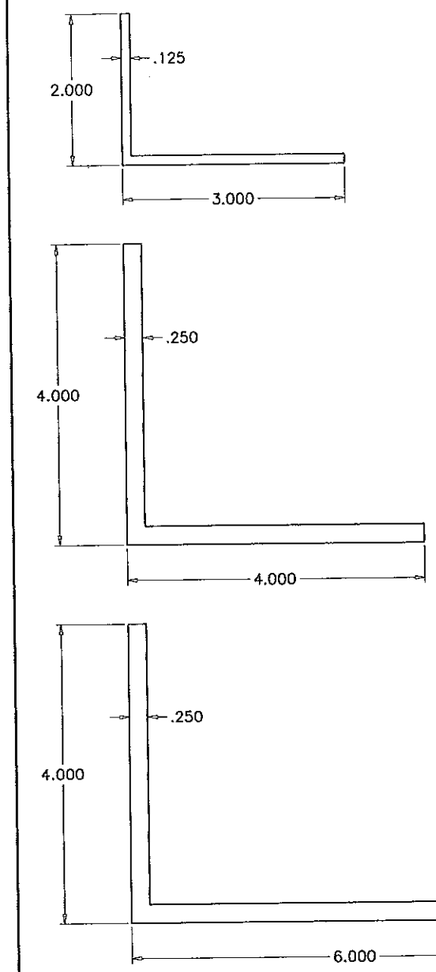

ANGLE CLIPS
6063-T6

PRODUCT REVISED
as complying with the Florida
Building Code
Acceptance No 13-0206.10
Expiration Date 10/20/2015
By
Miami Dade Product Control

Engr: JAVAD AHMAD
CIVIL
FLA. PE # 70592
C.A.N. 3538
SEP 26 2012

AL-FAROOQ CORPORATION
ENGINEERS & PRODUCT DEVELOPMENT
1235 S.W. 87 AVE
MIAMI, FLORIDA 33174
TEL. (305) 264-8100 FAX. (305) 262-6978

MULLION\M05-08SAT

ALUMINUM TUBE MULLIONS

SOL-A-TROL ALUMINUM PRODUCTS
4101 N.W. 132ND STREET
MIAMI, FL. 33054
TEL. (305) 681-2020 FAX. (305) 681-2035

revisions:

no	date	by	description
A	09.21.10		REV. PER BCCO COMMENTS
B	07.20.12		NO CHANGE THIS SHEET

date: 11-20-08
scale: 1/2" = 1"
dr. by: HAMID
chk. by:

drawing no.
M08-06

MULLION DESIGN LOAD CAPACITY – PSF

WINDOW DIMS. WIDTH (W)	MULL SPAN	MULLION M1	MULLION M2	MULLION M3	MULLION M4	MULLION M5	MULLION M6	MULLION M7	MULLION M8	MULLION M9
24"	48"	100.0	100.0	100.0	100.0	100.0	100.0	100.0	100.0	100.0
30"		100.0	100.0	100.0	100.0	100.0	100.0	100.0	100.0	100.0
36"		100.0	100.0	100.0	100.0	100.0	100.0	100.0	100.0	100.0
42"		100.0	100.0	100.0	100.0	100.0	100.0	100.0	100.0	100.0
48"		98.9	100.0	100.0	100.0	100.0	100.0	100.0	100.0	100.0
50"		95.0	100.0	100.0	100.0	100.0	100.0	100.0	100.0	100.0
54"		87.9	100.0	100.0	100.0	100.0	100.0	100.0	100.0	100.0
60"		79.1	100.0	100.0	100.0	100.0	100.0	100.0	100.0	100.0
66"		71.9	100.0	100.0	100.0	100.0	100.0	100.0	100.0	100.0
72"		65.9	100.0	100.0	100.0	100.0	100.0	100.0	100.0	100.0
24"	54"	100.0	100.0	100.0	100.0	100.0	100.0	100.0	100.0	100.0
30"		100.0	100.0	100.0	100.0	100.0	100.0	100.0	100.0	100.0
36"		100.0	100.0	100.0	100.0	100.0	100.0	100.0	100.0	100.0
42"		88.3	100.0	100.0	100.0	100.0	100.0	100.0	100.0	100.0
48"		77.2	100.0	100.0	100.0	100.0	100.0	100.0	100.0	100.0
50"		74.1	100.0	100.0	100.0	100.0	100.0	100.0	100.0	100.0
54"		68.6	100.0	100.0	100.0	100.0	100.0	100.0	100.0	100.0
60"		61.8	100.0	100.0	100.0	100.0	100.0	100.0	100.0	100.0
66"		56.2	91.4	100.0	100.0	100.0	100.0	100.0	100.0	100.0
72"		–	–	100.0	100.0	100.0	100.0	100.0	100.0	100.0
24"	60"	100.0	100.0	100.0	100.0	100.0	100.0	100.0	100.0	100.0
30"		90.1	100.0	100.0	100.0	100.0	100.0	100.0	100.0	100.0
36"		75.1	100.0	100.0	100.0	100.0	100.0	100.0	100.0	100.0
42"		64.3	100.0	100.0	100.0	100.0	100.0	100.0	100.0	100.0
48"		56.3	100.0	100.0	100.0	100.0	100.0	100.0	100.0	100.0
50"		54.0	97.8	100.0	100.0	100.0	100.0	100.0	100.0	100.0
54"		50.0	90.5	100.0	100.0	100.0	100.0	100.0	100.0	100.0
60"		45.0	81.5	100.0	100.0	100.0	100.0	100.0	100.0	100.0
66"		–	–	100.0	100.0	100.0	100.0	100.0	100.0	100.0
72"		–	–	100.0	100.0	100.0	100.0	100.0	100.0	100.0
24"	66"	84.6	100.0	100.0	100.0	100.0	100.0	100.0	100.0	100.0
30"		67.7	100.0	100.0	100.0	100.0	100.0	100.0	100.0	100.0
36"		56.4	100.0	100.0	100.0	100.0	100.0	100.0	100.0	100.0
42"		48.3	96.2	100.0	100.0	100.0	100.0	100.0	100.0	100.0
48"		42.3	84.2	100.0	100.0	100.0	100.0	100.0	100.0	100.0
50"		40.6	80.8	100.0	100.0	100.0	100.0	100.0	100.0	100.0
54"		37.6	74.8	100.0	100.0	100.0	100.0	100.0	100.0	100.0
60"		–	–	100.0	100.0	100.0	100.0	100.0	100.0	100.0
66"		–	–	98.7	100.0	100.0	100.0	100.0	100.0	100.0
72"		–	–	–	–	–	100.0	100.0	100.0	100.0
24"	72"	65.2	100.0	100.0	100.0	100.0	100.0	100.0	100.0	100.0
30"		52.1	100.0	100.0	100.0	100.0	100.0	100.0	100.0	100.0
36"		43.4	93.1	100.0	100.0	100.0	100.0	100.0	100.0	100.0
42"		37.2	79.8	100.0	100.0	100.0	100.0	100.0	100.0	100.0
48"		32.6	69.9	100.0	100.0	100.0	100.0	100.0	100.0	100.0
50"		31.3	67.1	100.0	100.0	100.0	100.0	100.0	100.0	100.0
54"		–	–	100.0	100.0	100.0	100.0	100.0	100.0	100.0
60"		–	–	91.2	93.9	100.0	100.0	100.0	100.0	100.0
66"		–	–	–	–	–	100.0	100.0	100.0	100.0
72"		–	–	–	–	–	100.0	100.0	100.0	100.0
24"	78"	–	–	100.0	100.0	100.0	100.0	100.0	100.0	100.0
30"		–	–	100.0	100.0	100.0	100.0	100.0	100.0	100.0
36"		–	–	100.0	100.0	100.0	100.0	100.0	100.0	100.0
42"		–	–	100.0	100.0	100.0	100.0	100.0	100.0	100.0
48"		–	–	97.1	100.0	100.0	100.0	100.0	100.0	100.0
50"		–	–	93.2	96.0	100.0	100.0	100.0	100.0	100.0
54"		–	–	86.3	88.9	100.0	100.0	100.0	100.0	100.0
60"		–	–	–	–	–	100.0	100.0	100.0	100.0
66"		–	–	–	–	–	100.0	100.0	100.0	100.0
72"		–	–	–	–	–	–	100.0	100.0	100.0

MULLION DESIGN LOAD CAPACITY – PSF

WINDOW DIMS. WIDTH (W)	MULL SPAN	MULLION M1	MULLION M2	MULLION M3	MULLION M4	MULLION M5	MULLION M6	MULLION M7	MULLION M8	MULLION M9
24"	84"	–	–	100.0	100.0	100.0	100.0	100.0	100.0	100.0
30"		–	–	100.0	100.0	100.0	100.0	100.0	100.0	100.0
36"		–	–	100.0	100.0	100.0	100.0	100.0	100.0	100.0
42"		–	–	91.1	98.6	100.0	100.0	100.0	100.0	100.0
48"		–	–	79.8	86.3	100.0	100.0	100.0	100.0	100.0
50"		–	–	76.6	82.8	100.0	100.0	100.0	100.0	100.0
54"		–	–	70.9	76.7	100.0	100.0	100.0	100.0	100.0
60"		–	–	–	–	–	100.0	100.0	100.0	100.0
66"		–	–	–	–	–	–	100.0	100.0	100.0
72"		–	–	–	–	–	–	99.8	100.0	100.0
24"	90"	–	–	100.0	100.0	100.0	100.0	100.0	100.0	100.0
30"		–	–	100.0	100.0	100.0	100.0	100.0	100.0	100.0
36"		–	–	86.5	100.0	100.0	100.0	100.0	100.0	100.0
42"		–	–	74.1	85.9	100.0	100.0	100.0	100.0	100.0
48"		–	–	64.8	75.1	100.0	100.0	100.0	100.0	100.0
50"		–	–	62.2	72.1	100.0	100.0	100.0	100.0	100.0
54"		–	–	–	–	–	100.0	100.0	100.0	100.0
60"		–	–	–	–	–	–	100.0	100.0	100.0
66"		–	–	–	–	–	–	94.9	100.0	100.0
24"	96"	–	–	100.0	100.0	100.0	100.0	100.0	100.0	100.0
30"		–	–	85.5	100.0	100.0	100.0	100.0	100.0	100.0
36"		–	–	71.2	88.0	100.0	100.0	100.0	100.0	100.0
42"		–	–	61.1	75.5	100.0	100.0	100.0	100.0	100.0
48"		–	–	53.4	66.0	97.3	100.0	100.0	100.0	100.0
50"		–	–	–	–	–	100.0	100.0	100.0	100.0
54"		–	–	–	–	–	95.8	100.0	100.0	100.0
60"		–	–	–	–	–	–	91.7	100.0	100.0
24"	102"	–	–	–	–	–	–	100.0	100.0	100.0
30"		–	–	–	–	–	–	100.0	100.0	100.0
36"		–	–	–	–	–	–	100.0	100.0	100.0
42"		–	–	–	–	–	–	100.0	100.0	100.0
48"		–	–	–	–	–	–	100.0	100.0	100.0
50"		–	–	–	–	–	–	97.5	100.0	100.0
54"		–	–	–	–	–	–	90.3	100.0	100.0
60"		–	–	–	–	–	–	81.3	100.0	100.0
24"	108"	–	–	–	–	–	–	100.0	100.0	100.0
30"		–	–	–	–	–	–	100.0	100.0	100.0
36"		–	–	–	–	–	–	100.0	100.0	100.0
42"		–	–	–	–	–	–	100.0	100.0	100.0
48"		–	–	–	–	–	–	90.6	100.0	100.0
50"		–	–	–	–	–	–	87.0	100.0	100.0
54"		–	–	–	–	–	–	80.5	100.0	100.0
24"	114"	–	–	–	–	–	–	100.0	100.0	100.0
30"		–	–	–	–	–	–	100.0	100.0	100.0
36"		–	–	–	–	–	–	100.0	100.0	100.0
42"		–	–	–	–	–	–	92.9	100.0	100.0
48"		–	–	–	–	–	–	81.3	100.0	100.0
50"		–	–	–	–	–	–	78.1	100.0	100.0
54"		–	–	–	–	–	–	72.3	100.0	100.0
24"	120"	–	–	–	–	–	–	100.0	100.0	100.0
30"		–	–	–	–	–	–	100.0	100.0	100.0
36"		–	–	–	–	–	–	97.8	100.0	100.0
42"		–	–	–	–	–	–	83.9	100.0	100.0
48"		–	–	–	–	–	–	73.4	100.0	100.0
50"		–	–	–	–	–	–	70.5	100.0	100.0

NOTE:
MULLIONS RATED IN THESE CHARTS MAY BE ORIENTED VERTICALLY OR HORIZONTALLY.
(INTERPOLATION BETWEEN WIDTHS ALLOWED)

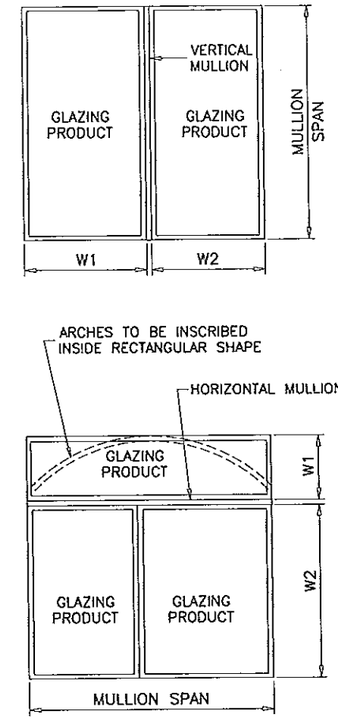

TYPICAL MULLION ARRANGEMENTS

$$\text{WIDTH (W)} = \frac{W1 + W2}{2}$$

PRODUCT REVISED
as complying with the Florida
Building Code
Acceptance No 13-0206.10
Expiration Date 10/20/2016
By
Miami Dade Product Control

MULLIONS

Engr: JAVAD AHMAD
CIVIL
FLA. PE # 70592
C.A.N. 3538

SEP 26 2012

AL-FAROOQ CORPORATION
ENGINEERS & PRODUCT DEVELOPMENT
1235 S.W. 87 AVE
MIAMI, FLORIDA 33174
TEL. (305) 264-8100 FAX. (305) 262-6978

MULLION\M05-08SAT

ALUMINUM TUBE MULLIONS

SOL-A-TROL ALUMINUM PRODUCTS
4101 N.W. 132ND STREET
MIAMI, FL. 33054
TEL. (305) 681-2020 FAX. (305) 681-2035

revisions:

no	date	by	description
A	09.21.10		NO CHANGE THIS SHEET
B	07.20.12		NO CHANGE THIS SHEET

date: 11-20-08
scale: –
dr. by: HAMID
chk. by:

drawing no. M08-06

DESIGN LOAD CAPACITY – PSF										
WINDOW DIMS.		ANCHORS TYPE A			ANCHORS TYPE B			ANCHORS TYPE C & D		
WIDTH (W)	MULL SPAN	'A1'	'A2'	'A3'	'B1'	'B2'	'B3'	C1/D1	C2/D2	C3/D3
24"	48"	100.0	100.0	100.0	100.0	100.0	100.0	100.0	100.0	100.0
30"		91.6	100.0	100.0	100.0	100.0	100.0	100.0	100.0	100.0
36"		76.3	100.0	100.0	98.0	100.0	100.0	100.0	100.0	100.0
42"		65.4	100.0	100.0	84.0	100.0	100.0	100.0	100.0	100.0
48"		57.3	100.0	100.0	73.5	100.0	100.0	88.0	100.0	100.0
50"		55.0	100.0	100.0	70.6	100.0	100.0	84.5	100.0	100.0
54"		50.9	100.0	100.0	65.3	100.0	100.0	78.2	100.0	100.0
60"		45.8	91.6	100.0	58.8	100.0	100.0	70.4	100.0	100.0
66"		41.6	83.3	100.0	53.5	100.0	100.0	64.0	100.0	100.0
72"		38.2	76.3	100.0	49.0	98.0	100.0	58.7	100.0	100.0
24"	54"	100.0	100.0	100.0	100.0	100.0	100.0	100.0	100.0	100.0
30"		81.4	100.0	100.0	100.0	100.0	100.0	100.0	100.0	100.0
36"		67.9	100.0	100.0	87.1	100.0	100.0	100.0	100.0	100.0
42"		58.2	100.0	100.0	74.7	100.0	100.0	89.4	100.0	100.0
48"		50.9	100.0	100.0	65.3	100.0	100.0	78.2	100.0	100.0
50"		48.9	97.7	100.0	62.7	100.0	100.0	75.1	100.0	100.0
54"		45.2	90.5	100.0	58.1	100.0	100.0	69.5	100.0	100.0
60"		40.7	81.4	100.0	52.3	100.0	100.0	62.6	100.0	100.0
66"		37.0	74.0	100.0	47.5	95.0	100.0	56.9	100.0	100.0
72"		33.9	67.9	100.0	43.6	87.1	100.0	52.1	100.0	100.0
24"	60"	91.6	100.0	100.0	100.0	100.0	100.0	100.0	100.0	100.0
30"		73.3	100.0	100.0	94.1	100.0	100.0	100.0	100.0	100.0
36"		61.1	100.0	100.0	78.4	100.0	100.0	93.9	100.0	100.0
42"		52.3	100.0	100.0	67.2	100.0	100.0	80.5	100.0	100.0
48"		45.8	91.6	100.0	58.8	100.0	100.0	70.4	100.0	100.0
50"		44.0	87.9	100.0	56.4	100.0	100.0	67.6	100.0	100.0
54"		40.7	81.4	100.0	52.3	100.0	100.0	62.6	100.0	100.0
60"		36.6	73.3	100.0	47.0	94.1	100.0	56.3	100.0	100.0
66"		33.3	66.6	99.9	42.8	85.5	100.0	51.2	100.0	100.0
72"		30.5	61.1	91.6	39.2	78.4	100.0	46.9	93.9	100.0
24"	66"	83.3	100.0	100.0	100.0	100.0	100.0	100.0	100.0	100.0
30"		66.6	100.0	100.0	85.5	100.0	100.0	100.0	100.0	100.0
36"		55.5	100.0	100.0	71.3	100.0	100.0	85.3	100.0	100.0
42"		47.6	95.2	100.0	61.1	100.0	100.0	73.1	100.0	100.0
48"		41.6	83.3	100.0	53.5	100.0	100.0	64.0	100.0	100.0
50"		40.0	79.9	100.0	51.3	100.0	100.0	61.4	100.0	100.0
54"		37.0	74.0	100.0	47.5	95.0	100.0	56.9	100.0	100.0
60"		33.3	66.6	99.9	42.8	85.5	100.0	51.2	100.0	100.0
66"		30.3	60.6	90.8	38.9	77.8	100.0	46.5	93.1	100.0
72"		27.8	55.5	83.3	35.6	71.3	100.0	42.7	85.3	100.0
24"	72"	76.3	100.0	100.0	98.0	100.0	100.0	100.0	100.0	100.0
30"		61.1	100.0	100.0	78.4	100.0	100.0	93.9	100.0	100.0
36"		50.9	100.0	100.0	65.3	100.0	100.0	78.2	100.0	100.0
42"		43.6	87.2	100.0	56.0	100.0	100.0	67.0	100.0	100.0
48"		38.2	76.3	100.0	49.0	98.0	100.0	58.7	100.0	100.0
50"		36.6	73.3	100.0	47.0	94.1	100.0	56.3	100.0	100.0
54"		33.9	67.9	100.0	43.6	87.1	100.0	52.1	100.0	100.0
60"		30.5	61.1	91.6	39.2	78.4	100.0	46.9	93.9	100.0
66"		27.8	55.5	83.3	35.6	71.3	100.0	42.7	85.3	100.0
72"		25.4	50.9	76.3	32.7	65.3	98.0	39.1	78.2	100.0
24"	78"	70.5	100.0	100.0	90.5	100.0	100.0	100.0	100.0	100.0
30"		56.4	100.0	100.0	72.4	100.0	100.0	86.6	100.0	100.0
36"		47.0	93.9	100.0	60.3	100.0	100.0	72.2	100.0	100.0
42"		40.3	80.5	100.0	51.7	100.0	100.0	61.9	100.0	100.0
48"		35.2	70.5	100.0	45.2	90.5	100.0	54.2	100.0	100.0
50"		33.8	67.6	100.0	43.4	86.8	100.0	52.0	100.0	100.0
54"		31.3	62.6	93.9	40.2	80.4	100.0	48.1	96.3	100.0
60"		28.2	56.4	84.6	36.2	72.4	100.0	43.3	86.6	100.0
66"		25.6	51.2	76.9	32.9	65.8	98.7	39.4	78.8	100.0
72"		23.5	47.0	70.5	30.2	60.3	90.5	36.1	72.2	100.0

DESIGN LOAD CAPACITY – PSF										
WINDOW DIMS.		ANCHORS TYPE A			ANCHORS TYPE B			ANCHORS TYPE C & D		
WIDTH (W)	MULL SPAN	'A1'	'A2'	'A3'	'B1'	'B2'	'B3'	C1/D1	C2/D2	C3/D3
24"	84"	65.4	100.0	100.0	84.0	100.0	100.0	100.0	100.0	100.0
30"		52.3	100.0	100.0	67.2	100.0	100.0	80.5	100.0	100.0
36"		43.6	87.2	100.0	56.0	100.0	100.0	67.0	100.0	100.0
42"		37.4	74.8	100.0	48.0	96.0	100.0	57.5	100.0	100.0
48"		32.7	65.4	98.1	42.0	84.0	100.0	50.3	100.0	100.0
50"		31.4	62.8	94.2	40.3	80.6	100.0	48.3	96.5	100.0
54"		29.1	58.2	87.2	37.3	74.7	100.0	44.7	89.4	100.0
60"		26.2	52.3	78.5	33.6	67.2	100.0	40.2	80.5	100.0
66"		23.8	47.6	71.4	30.5	61.1	91.6	36.6	73.1	100.0
72"		21.8	43.6	65.4	28.0	56.0	84.0	33.5	67.0	100.0
24"	90"	61.1	100.0	100.0	78.4	100.0	100.0	93.9	100.0	100.0
30"		48.9	97.7	100.0	62.7	100.0	100.0	75.1	100.0	100.0
36"		40.7	81.4	100.0	52.3	100.0	100.0	62.6	100.0	100.0
42"		34.9	69.8	100.0	44.8	89.6	100.0	53.6	100.0	100.0
48"		30.5	61.1	91.6	39.2	78.4	100.0	46.9	93.9	100.0
50"		29.3	58.6	87.9	37.6	75.3	100.0	45.1	90.1	100.0
54"		27.1	54.3	81.4	34.8	69.7	100.0	41.7	83.4	100.0
60"		24.4	48.9	73.3	31.4	62.7	94.1	37.5	75.1	100.0
66"		22.2	44.4	66.6	28.5	57.0	85.5	34.1	68.3	100.0
24"	96"	57.3	100.0	100.0	73.5	100.0	100.0	88.0	100.0	100.0
30"		45.8	91.6	100.0	58.8	100.0	100.0	70.4	100.0	100.0
36"		38.2	76.3	100.0	49.0	98.0	100.0	58.7	100.0	100.0
42"		32.7	65.4	98.1	42.0	84.0	100.0	50.3	100.0	100.0
48"		28.6	57.3	85.9	36.8	73.5	100.0	44.0	88.0	100.0
50"		27.5	55.0	82.4	35.3	70.6	100.0	42.2	84.5	100.0
54"		25.4	50.9	76.3	32.7	65.3	98.0	39.1	78.2	100.0
60"		22.9	45.8	68.7	29.4	58.8	88.2	35.2	70.4	100.0
24"	102"	53.9	100.0	100.0	69.2	100.0	100.0	82.8	100.0	100.0
30"		43.1	86.2	100.0	55.3	100.0	100.0	66.3	100.0	100.0
36"		35.9	71.8	100.0	46.1	92.2	100.0	55.2	100.0	100.0
42"		30.8	61.6	92.4	39.5	79.1	100.0	47.3	94.7	100.0
48"		26.9	53.9	80.8	34.6	69.2	100.0	41.4	82.8	100.0
50"		25.9	51.7	77.6	33.2	66.4	99.6	39.8	79.5	100.0
54"		23.9	47.9	71.8	30.7	61.5	92.2	36.8	73.6	100.0
60"		21.6	43.1	64.7	27.7	55.3	83.0	33.1	66.3	99.4
24"	108"	50.9	100.0	100.0	65.3	100.0	100.0	78.2	100.0	100.0
30"		40.7	81.4	100.0	52.3	100.0	100.0	62.6	100.0	100.0
36"		33.9	67.9	100.0	43.6	87.1	100.0	52.1	100.0	100.0
42"		29.1	58.2	87.2	37.3	74.7	100.0	44.7	89.4	100.0
48"		25.4	50.9	76.3	32.7	65.3	98.0	39.1	78.2	100.0
50"		24.4	48.9	73.3	31.4	62.7	94.1	37.5	75.1	100.0
54"		22.6	45.2	67.9	29.0	58.1	87.1	34.8	69.5	100.0
24"	114"	48.2	96.4	100.0	61.9	100.0	100.0	74.1	100.0	100.0
30"		38.6	77.1	100.0	49.5	99.0	100.0	59.3	100.0	100.0
36"		32.1	64.3	96.4	41.3	82.5	100.0	49.4	98.8	100.0
42"		27.5	55.1	82.6	35.4	70.7	100.0	42.3	84.7	100.0
48"		24.1	48.2	72.3	30.9	61.9	92.8	37.1	74.1	100.0
50"		23.1	46.3	69.4	29.7	59.4	89.1	35.6	71.1	100.0
54"		21.4	42.9	64.3	27.5	55.0	82.5	32.9	65.9	98.8
24"	120"	45.8	91.6	100.0	58.8	100.0	100.0	70.4	100.0	100.0
30"		36.6	73.3	100.0	47.0	94.1	100.0	56.3	100.0	100.0
36"		30.5	61.1	91.6	39.2	78.4	100.0	46.9	93.9	100.0
42"		26.2	52.3	78.5	33.6	67.2	100.0	40.2	80.5	100.0
48"		22.9	45.8	68.7	29.4	58.8	88.2	35.2	70.4	100.0
50"		22.0	44.0	66.0	28.2	56.4	84.7	33.8	67.6	100.0

PRODUCT REVISED
as complying with the Florida
Building Code
Acceptance No 13-0206.10
Expiration Date 10/20/2016
By
Miami Dade Product Control

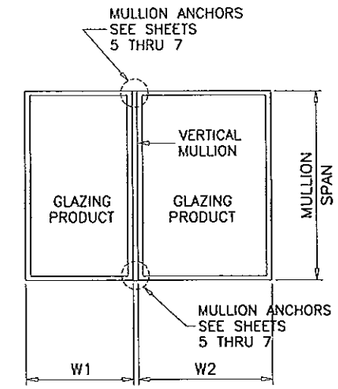

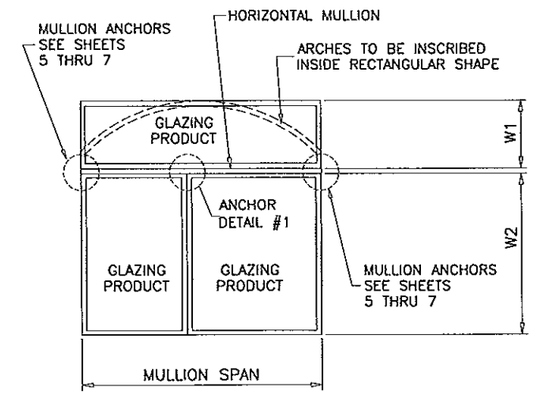

TYPICAL MULLION ARRANGEMENTS

$$\text{WIDTH (W)} = \frac{W1 + W2}{2}$$

NOTE:
ANY ANCHOR CONDITION SHOWN HEREIN MAY COVER LOCATIONS AT HEAD, SILL OR JAMB ENDS.
FOR ANCHORS DESCRIPTION SEE SHEETS 5 THRU 7.
(INTERPOLATION BETWEEN WIDTHS OR SPANS ALLOWED)

ANCHORS

Engr: JAVAD AHMAD
CIVIL
FLA. PE # 70592
C.A.N. 3538

SEP 26 2012

AL-FAROOQ CORPORATION
ENGINEERS & PRODUCT DEVELOPMENT
1235 S.W. 87 AVE
MIAMI, FLORIDA 33174
TEL. (305) 264-8100 FAX. (305) 262-6978

MULLION \ M05-08SAT

ALUMINUM TUBE MULLIONS

SOL-A-TROL ALUMINUM PRODUCTS
4101 N.W. 132ND STREET
MIAMI, FL. 33054
TEL. (305) 681-2020 FAX. (305) 681-2035

revisions:

no	date	by	description
A	09.21.10		NO CHANGE THIS SHEET
B	07.20.12		NO CHANGE THIS SHEET

date: 11-20-08
scale: –
dr. by: HAMID
chk. by:

drawing no.
M08-06

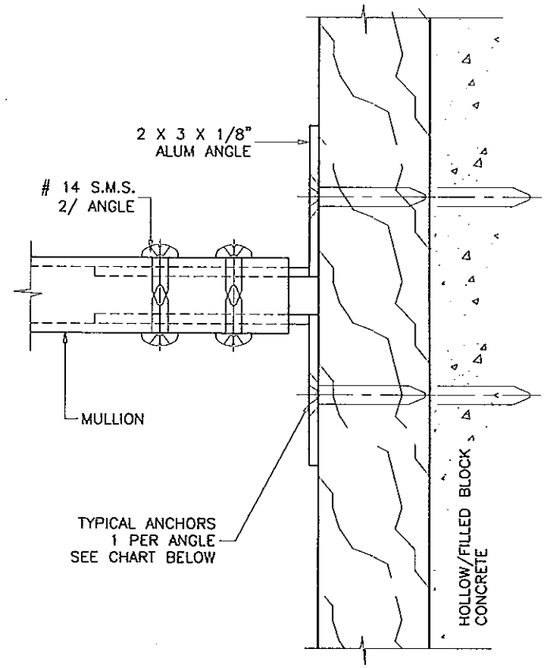

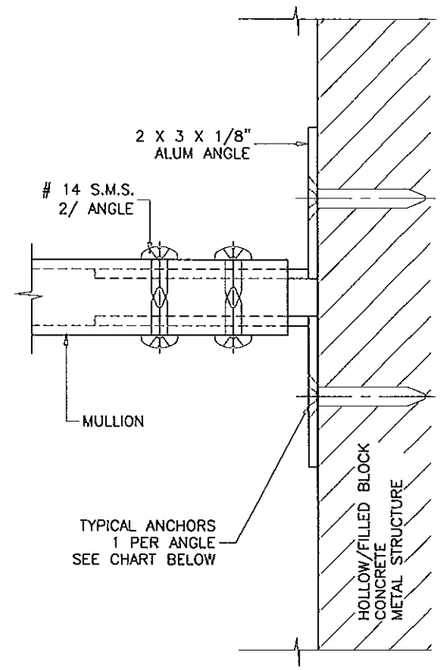

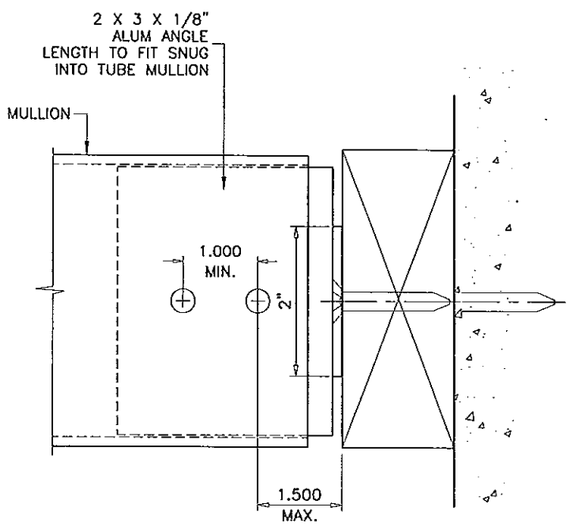

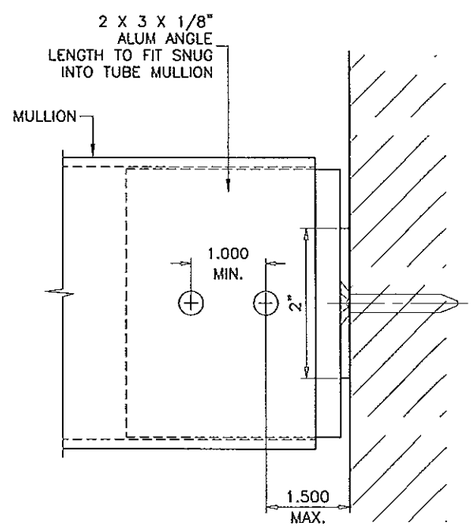

TYPICAL ANCHORS:

ANCHOR TYPES		SUBSTRATE	AT HEAD & SILL		AT JAMBS	
			MIN. EMBED.	MIN. EDGE DIST.	MIN. EMBED.	MIN. EDGE DIST.
1/4" DIA. ULTRACONS BY 'ELCO' (Fu=177 KSI, Fy=155 KSI)	TYPE 'A1'	WOOD	1-1/2"	1"	1-1/2"	1"
	TYPE 'B1'	MASONRY	N.A.	N.A.	1-1/4"	2-1/2"
	TYPE 'C1'	CONCRETE	1-3/4"	2-1/2"	1-3/4"	2-1/2"
1/4" DIA. SELF DRILLING SCREWS (GRADE 5 CRS)	TYPE 'D1'	METAL	1/8"	3/4"	1/8"	3/4"

WOOD = 2BY WOOD BUCKS OR WOOD STRUCTURE S.G. = 0.55 MIN.
MASONRY = C-90 HOLLOW/FILLED BLOCK f'm = 2000 PSI MIN.
CONCRETE = f'c = 3000 PSI MIN.
METAL = 1/8" MIN. THK. STEEL Fy = 36 KSI MIN.
MIAMI-DADE COUNTY APPROVED MULLION 1/8" MIN. THK.

1BY OR 2BY WOOD BUCKS AND METAL STRUCTURES NOT BY SOLATROL MUST SUSTAIN LOADS IMPOSED BY GLAZING SYSTEM AND TRANSFER THEM TO BUILDING STRUCTURE.

ANCHORS MAY BE HEX OR FLAT HEAD.

ANCHORS TYPE 'A1'

INTO 2BY WOOD BUCKS OR WOOD STRUCTURES
THRU 1BY BUCKS INTO CONC. OR MASONRY

ANCHORS TYPE 'B1', 'C1' & 'D1'

DIRECTLY INTO CONC. OR MASONRY
INTO METAL STRUCTURES

PRODUCT REVISED
as complying with the Florida
Building Code
Acceptance No 13-0206.10
Expiration Date 10/20/2015
By
Miami Dade Product Control

ANGLES CONNECTED DIRECTLY TO MASONRY TO BE PROTECTED WITH ALKALI-RESISTANT COATINGS, SUCH AS BITUMINOUS PAINT OR WATER-WHITE METHACRYLATE LACQUER.

Engr: JAVAD AHMAD
CIVIL
FLA. PE # 70592
C.A.N. 3538

SEP 26 2012

AL-FAROOQ CORPORATION
ENGINEERS & PRODUCT DEVELOPMENT
1235 S.W. 87 AVE
MIAMI, FLORIDA 33174
TEL. (305) 264-8100 FAX. (305) 262-6978

MULLION\M05-08SAT

ALUMINUM TUBE MULLIONS

SOL-A-TROL ALUMINUM PRODUCTS
4101 N.W. 132ND STREET
MIAMI, FL. 33054
TEL. (305) 681-2020 FAX. (305) 681-2035

revisions:

no	date	by	description
A	09.21.10		REV. PER BCCO COMMENTS
B	07.20.12		UPDATED TO 2010 FBC

date: 11-20-08
scale: 1/2" = 1"
dr. by: HAMID
chk. by:

drawing no.
M08-06

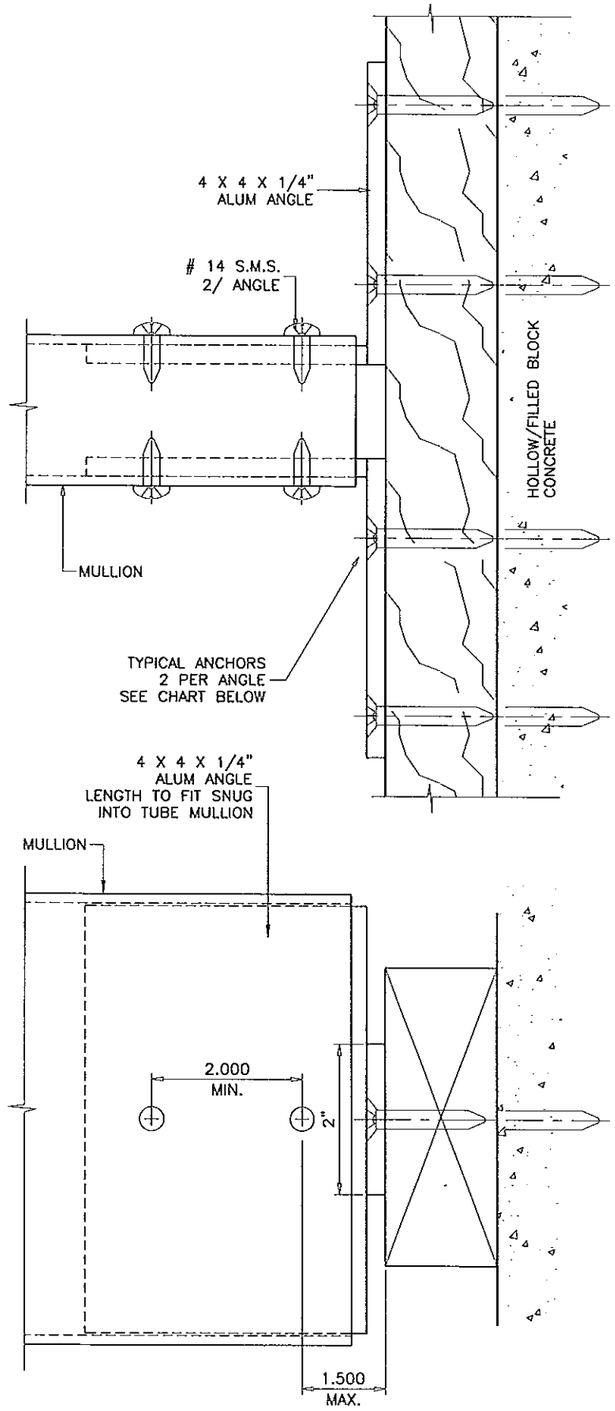

ANCHORS TYPE 'A2'

INTO 2BY WOOD BUCKS OR WOOD STRUCTURES
THRU 1BY BUCKS INTO CONC. OR MASONRY

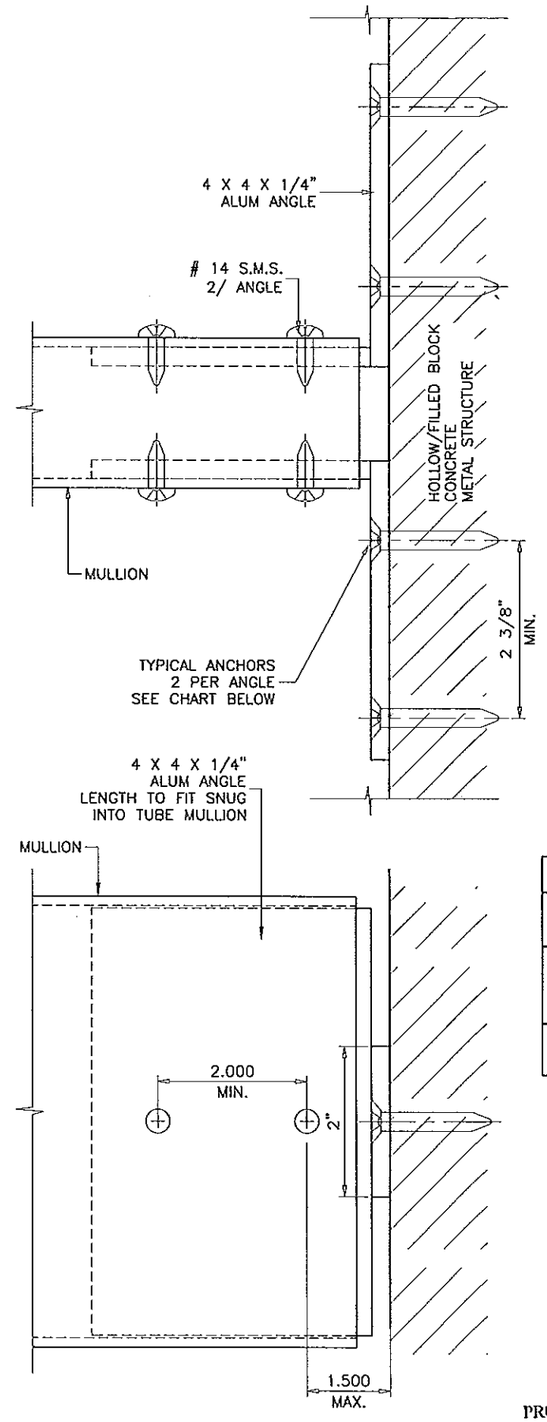

ANCHORS TYPE 'B2', 'C2' & 'D2'

DIRECTLY INTO CONC. OR MASONRY
INTO METAL STRUCTURES

ANGLES CONNECTED DIRECTLY TO MASONRY TO BE PROTECTED WITH ALKALI-RESISTANT COATINGS, SUCH AS BITUMINOUS PAINT OR WATER-WHITE METHACRYLATE LACQUER.

TYPICAL ANCHORS:

ANCHOR TYPES		SUBSTRATE	AT HEAD & SILL		AT JAMBS	
			MIN. EMBED.	MIN. EDGE DIST.	MIN. EMBED.	MIN. EDGE DIST.
1/4" DIA. ULTRACONS BY 'ELCO' (Fu=177 KSI, Fy=155 KSI)	TYPE 'A2'	WOOD	1-1/2"	1"	1-1/2"	1"
	TYPE 'B2'	MASONRY	N.A.	N.A.	1-1/4"	2-1/2"
	TYPE 'C2'	CONCRETE	1-3/4"	2-1/2"	1-3/4"	2-1/2"
1/4" DIA. SELF DRILLING SCREWS (GRADE 5 CRS)	TYPE 'D2'	METAL	1/8"	3/4"	1/8"	3/4"

WOOD = 2BY WOOD BUCKS OR WOOD STRUCTURE S.G. = 0.55 MIN.
MASONRY = C-90 HOLLOW/FILLED BLOCK f'm = 2000 PSI MIN.
CONCRETE = f'c = 3000 PSI MIN.
METAL = 1/8" MIN. THK. STEEL Fy = 36 KSI MIN.
MIAMI-DADE COUNTY APPROVED MULLION 1/8" MIN. THK.

IBY OR 2BY WOOD BUCKS AND METAL STRUCTURES NOT BY SOLATROL MUST SUSTAIN LOADS IMPOSED BY GLAZING SYSTEM AND TRANSFER THEM TO BUILDING STRUCTURE.

ANCHORS MAY BE HEX OR FLAT HEAD.

PRODUCT REVISED
as complying with the Florida
Building Code
Acceptance No 13-0206.10
Expiration Date 10/20/2015
By
Miami Dade Product Control

Engr: JAVAD AHMAD
CIVIL
FLA. PE # 70592
C.A.N. 3538

SEP 26 2012

AL-FAROOQ CORPORATION
ENGINEERS & PRODUCT DEVELOPMENT
1235 S.W. 87 AVE
MIAMI, FLORIDA 33174
TEL. (305) 264-8100 FAX. (305) 262-6978
MULLION\M05-08SAT

ALUMINUM TUBE MULLIONS

SOL-A-TROL ALUMINUM PRODUCTS
4101 N.W. 132ND STREET
MIAMI, FL. 33054
TEL. (305) 681-2020 FAX. (305) 681-2035

revisions:

no	date	by	description
A	09.21.10		REV. PER BCCO COMMENTS
B	07.20.12		UPDATED TO 2010 FBC

date: 11-20-08
scale: 1/2" = 1"
dr. by: HAMID
chk. by:

drawing no.
M08-06

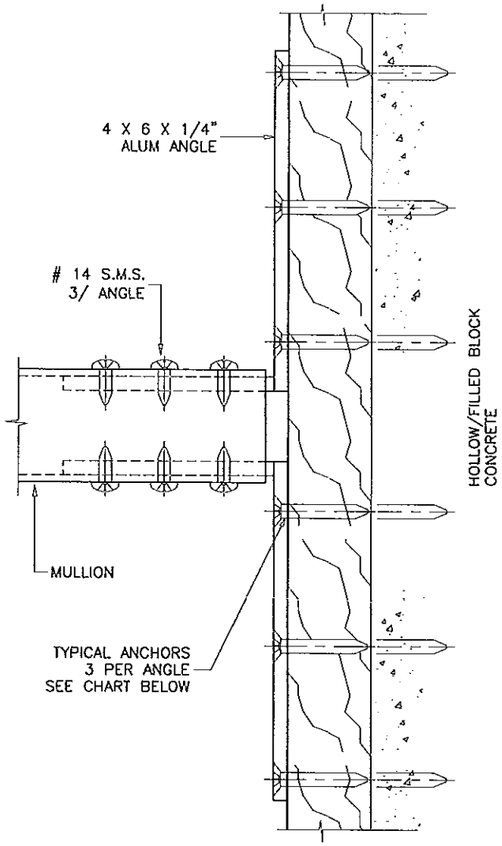

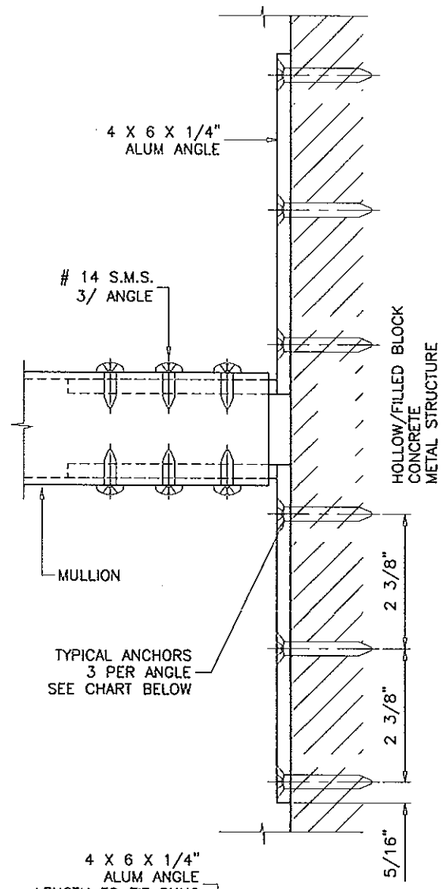

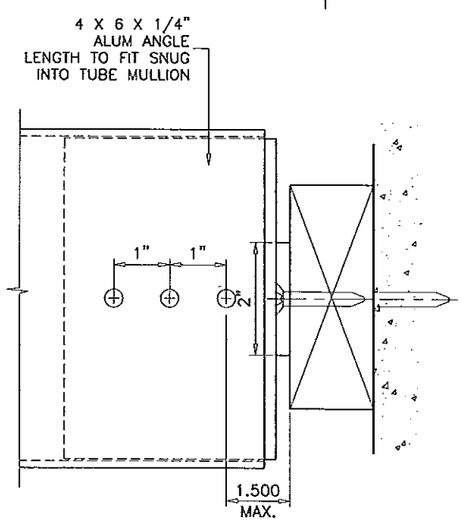

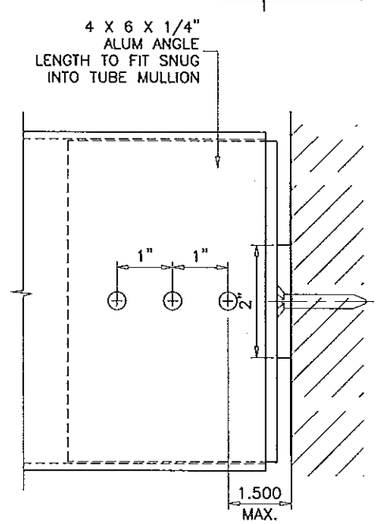

ANCHORS TYPE 'A3'

INTO 2BY WOOD BUCKS OR WOOD STRUCTURES
THRU 1BY BUCKS INTO CONC. OR MASONRY

ANCHORS TYPE 'B3', 'C3' & 'D3'

DIRECTLY INTO CONC. OR MASONRY
INTO METAL STRUCTURES

ANGLES CONNECTED DIRECTLY TO MASONRY TO BE PROTECTED WITH ALKALI-RESISTANT COATINGS, SUCH AS BITUMINOUS PAINT OR WATER-WHITE METHACRYLATE LACQUER.

TYPICAL ANCHORS:

ANCHOR TYPES		SUBSTRATE	AT HEAD & SILL		AT JAMBS	
			MIN. EMBED.	MIN. EDGE DIST.	MIN. EMBED.	MIN. EDGE DIST.
1/4" DIA. ULTRACONS BY 'ELCO' (Fu=177 KSI, Fy=155 KSI)	TYPE 'A3'	WOOD	1-1/2"	1"	1-1/2"	1"
	TYPE 'B3'	MASONRY	N.A.	N.A.	1-1/4"	2-1/2"
	TYPE 'C3'	CONCRETE	1-3/4"	2-1/2"	1-3/4"	2-1/2"
1/4" DIA. SELF DRILLING SCREWS (GRADE 5 CRS)	TYPE 'D3'	METAL	1/8"	3/4"	1/8"	3/4"

WOOD = 2BY WOOD BUCKS OR WOOD STRUCTURE S.G. = 0.55 MIN.
MASONRY = C-90 HOLLOW/FILLED BLOCK f'm = 2000 PSI MIN.
CONCRETE = f'c = 3000 PSI MIN.
METAL = 1/8" MIN. THK. STEEL Fy = 36 KSI MIN.
MIAMI-DADE COUNTY APPROVED MULLION 1/8" MIN. THK.

IBY OR 2BY WOOD BUCKS AND METAL STRUCTURES NOT BY SOLATROL MUST SUSTAIN LOADS IMPOSED BY GLAZING SYSTEM AND TRANSFER THEM TO BUILDING STRUCTURE.

ANCHORS MAY BE HEX OR FLAT HEAD.

PRODUCT REVISED
as complying with the Florida
Building Code
Acceptance No 13-0206.10
Expiration Date 10/20/2015
By
Miami Dade Product Control

Engr: JAVAD AHMAD
CIVIL
FLA. PE # 70592
C.A.N. 3538

SEP 26 2012

AL-FAROOQ CORPORATION
ENGINEERS & PRODUCT DEVELOPMENT
1235 S.W. 87 AVE
MIAMI, FLORIDA 33174
TEL. (305) 264-8100 FAX. (305) 262-6978

MULLION\M05-08SAT

ALUMINUM TUBE MULLIONS

SOL-A-TROL ALUMINUM PRODUCTS
4101 N.W. 132ND STREET
MIAMI, FL. 33054
TEL. (305) 681-2020 FAX. (305) 681-2035

revisions:

no	date	by	description
A	09.21.10		REV. PER BCCO COMMENTS
B	07.20.12		UPDATED TO 2010 FBC

date: 11-20-08
scale: 3/8" = 1"
dr. by: HAMID
chk. by:

drawing no.
M08-06

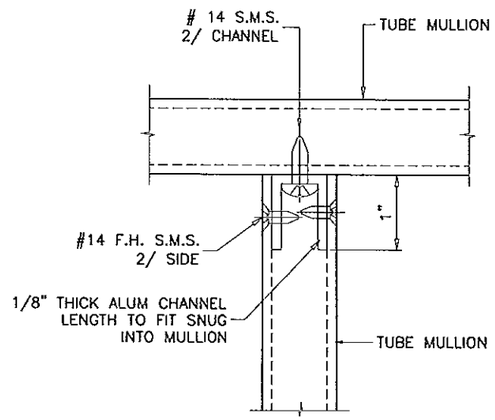

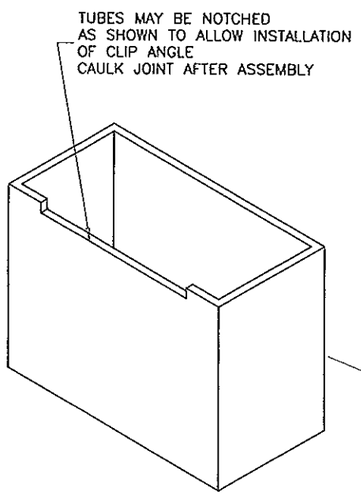

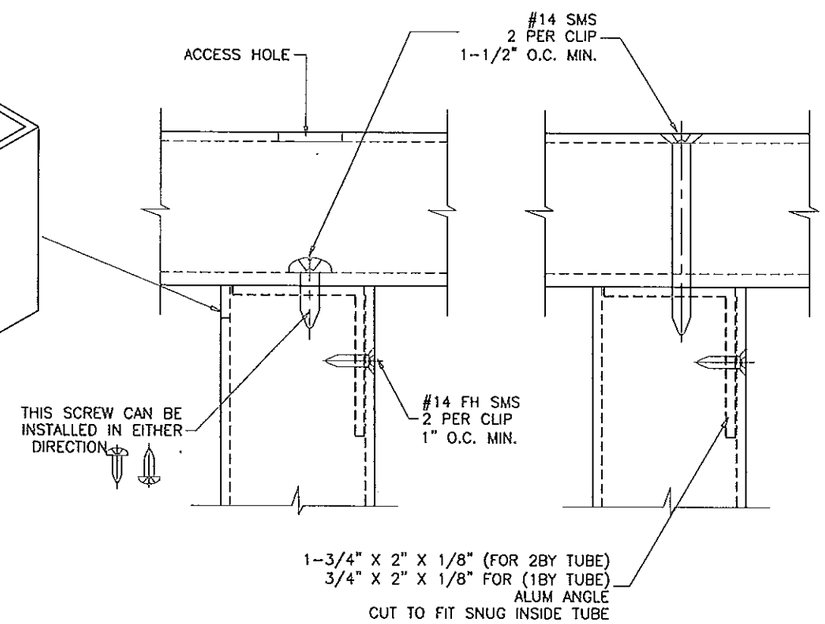

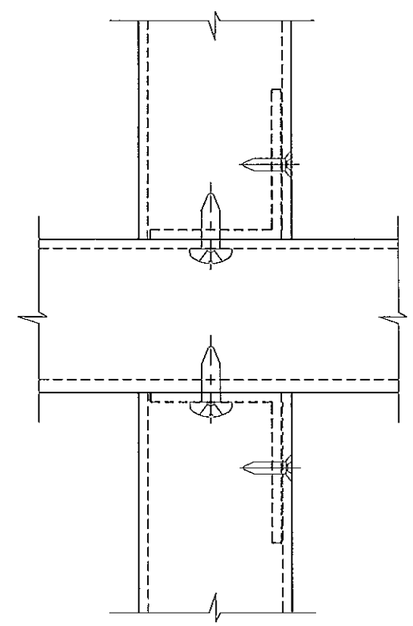

ANCHOR DETAIL #1

METAL TO METAL CONNECTION
USE CHARTS FOR ANCHOR TYPE 'D' TO VERIFY CAPACITY OF CONNECTION
SEE SHEET 4 FOR ANCHOR CHARTS

PRODUCT REVISED
as complying with the Florida
Building Code
Acceptance No 13-0206.10
Expiration Date 10/20/2015
By
Miami-Dade Product Control

Engr: JAVAD AHMAD
CIVIL
FLA. PE # 70592
C.A.N. 3538

SEP 26 2012

AL-FAROOQ CORPORATION
ENGINEERS & PRODUCT DEVELOPMENT
1235 S.W. 87 AVE
MIAMI, FLORIDA 33174
TEL. (305) 264-8100 FAX. (305) 262-6978

MULLION\M05-08SAT

ALUMINUM TUBE MULLIONS

SOL-A-TROL ALUMINUM PRODUCTS
4101 N.W. 132ND STREET
MIAMI, FL. 33054
TEL. (305) 681-2020 FAX. (305) 681-2035

revisions:

no	date	by	description
A	09.21.10		NO CHANGE THIS SHEET
B	07.20.12		NO CHANGE THIS SHEET

date: 11-20-08
scale: 1/2" = 1"
dr. by: HAMID
chk. by:

drawing no.
M08-06

sheet 8 of 8