MIAMI-DADE COUNTY
DEPARTMENT OF REGULATORY AND ECONOMIC RESOURCES (RER)
BOARD AND CODE ADMINISTRATION DIVISION

MIAMI-DADE COUNTY
PRODUCT CONTROL SECTION
11805 SW 26 Street, Room 208
T (786) 315-2590 F (786) 315-2599
www.miamidade.gov/economy

NOTICE OF ACCEPTANCE (NOA)

NR Architectural Products
4348 Westroads Drive
West Palm Beach, FL 33407

SCOPE:

This NOA is being issued under the applicable rules and regulations governing the use of construction materials. The documentation submitted has been reviewed and accepted by Miami-Dade County RER - Product Control Section to be used in Miami Dade County and other areas where allowed by the Authority Having Jurisdiction (AHJ).

This NOA shall not be valid after the expiration date stated below. The Miami-Dade County Product Control Section (In Miami Dade County) and/or the AHJ (in areas other than Miami Dade County) reserve the right to have this product or material tested for quality assurance purposes. If this product or material fails to perform in the accepted manner, the manufacturer will incur the expense of such testing and the AHJ may immediately revoke, modify, or suspend the use of such product or material within their jurisdiction. RER reserves the right to revoke this acceptance, if it is determined by Miami-Dade County Product Control Section that this product or material fails to meet the requirements of the applicable building code.

This product is approved as described herein, and has been designed to comply with the Florida Building Code, including the High Velocity Hurricane Zone.

DESCRIPTION: Series "6000" Aluminum Window Wall System – S.M.I.

APPROVAL DOCUMENT: Drawing No. **AD12-02**, titled "NRAP Fixed Window Wall Sys. Series 6000 (S.M.I.)", sheets 1 through 10 of 10, dated 02/20/12, prepared by MCY Engineering, Inc., signed and sealed by Yiping Wang, P.E., bearing the Miami-Dade County Product Control Renewal stamp with the Notice of Acceptance number and expiration date by the Miami-Dade County Product Control Section.

MISSILE IMPACT RATING: Small Missile Impact Resistant

LABELING: Each unit shall bear a permanent label with the manufacturer's name or logo, city, state, series, and following statement: "Miami-Dade County Product Control Approved", unless otherwise noted herein.

RENEWAL of this NOA shall be considered after a renewal application has been filed and there has been no change in the applicable building code negatively affecting the performance of this product.

TERMINATION of this NOA will occur after the expiration date or if there has been a revision or change in the materials, use, and/or manufacture of the product or process. Misuse of this NOA as an endorsement of any product, for sales, advertising or any other purposes shall automatically terminate this NOA. Failure to comply with any section of this NOA shall be cause for termination and removal of NOA.

ADVERTISEMENT: The NOA number preceded by the words Miami-Dade County, Florida, and followed by the expiration date may be displayed in advertising literature. If any portion of the NOA is displayed, then it shall be done in its entirety.

INSPECTION: A copy of this entire NOA shall be provided to the user by the manufacturer or its distributors and shall be available for inspection at the job site at the request of the Building Official.

This NOA **renews NOA# 12-0405.06** and consists of this page 1 and evidence pages E-1 and E-2, as well as approval document mentioned above.

The submitted documentation was reviewed by **Jaime D. Gascon, P.E.**

MIAMI-DADE COUNTY APPROVED

J. Gascon 5/3/13

NR Architectural Products

NOTICE OF ACCEPTANCE: EVIDENCE SUBMITTED

A. DRAWINGS

1. Manufacturer's die drawings and sections.
2. Drawing No **AD12-02**, Sheets 1 through 10 of 10, titled "NRAP Fixed Window Wall Sys. Series 6000 (S.M.I.)", dated 02/20/12, prepared by MCY Engineering, Inc., signed and sealed by Yiping Wang, P. E.
   (Submitted under previous NOA No. 12–0405.06)

B. TESTS

1. Test reports on: 1) Air Infiltration Test, per FBC, TAS 202-94
   2) Uniform Static Air Pressure Test, Loading per FBC TAS 202-94
   3) Water Resistance Test, per FBC, TAS 202-94
   4) Small Missile Impact Test per FBC, TAS 201-94
   5) Cyclic Wind Pressure Loading per FBC, TAS 203-94

   along with marked–up drawings and installation diagram of an aluminum window wall system, prepared by Hurricane Test Laboratory, LLC, Test Report No. **HTL– 0242–0217–05,** Specimens **M8**, **M9**, **M12a**, **M13** and **M14**, dated 05/11/07, signed and sealed by Vinu J. Abraham, P.E.
   (Submitted under previous NOA No. 07–1219.15)
2. Test reports on: 1) Air Infiltration Test, per FBC, TAS 202-94
   2) Uniform Static Air Pressure Test, Loading per FBC TAS 202-94
   3) Water Resistance Test, per FBC, TAS 202-94
   4) Small Missile Impact Test per FBC, TAS 201-94
   5) Cyclic Wind Pressure Loading per FBC, TAS 203-94

   along with marked–up drawings and installation diagram of an aluminum window wall system, prepared by Hurricane Test Laboratory, LLC, Test Report No. **HTL–0242–0310–07,** Specimens **M8a** & **M8b**, dated 05/11/07, signed and sealed by Vinu J. Abraham, P.E.
   (Submitted under previous NOA No. 07–1219.15)

C. CALCULATIONS

1. Anchor verification calculations and structural analysis, complying with FBC–2007, prepared by Al–Farooq Corporation, dated 11/14/07 and revised on 03/18/09, signed and sealed by Humayoun Farooq, P. E.
   (Submitted under previous NOA No. 09–0407.04)
2. Glazing complies with ASTM E1300-04

D. QUALITY ASSURANCE

1. Miami-Dade Department of Regulatory and Economic Resources (RER)

Jaime D. Gascon, P.E.
Product Control Section Supervisor
NOA No. 13-0212.10
Expiration Date: April 24, 2018
Approval Date: May 09, 2013

NOTICE OF ACCEPTANCE: EVIDENCE SUBMITTED

E. MATERIAL CERTIFICATIONS

1. Notice of Acceptance No. **11–0624.01** issued to **E.I. DuPont DeNemours & Co., Inc.** for their **"DuPont Butacite® PVB Interlayer"** dated 09/08/11, expiring on 12/11/16.
2. Notice of Acceptance No. **11–0325.05** issued to **Solutia, Inc.** for their **"Saflex and Vanceva clear and color interlayers"** dated 05/05/11, expiring on 05/21/16
3. TREMCO Part No. **TR-14271E** EPDM exterior glazing gasket complying with the following:
   a) ASTM C864 Specification for Dense Elastomeric Compression Seal Gaskets, Setting Blocks, and Spacers with Option II exceptions.
   b) ASTM D412 Standard Test Methods for Vulcanized Rubber and Thermoplastic Elastomer—Tension of 1600 PSI.
   c) ASTM D395B Test Methods for Rubber Property—Compression Set for 22 HRS 158°F.
   d) ASTM D 624 Test Method for Tear Strength of Conventional Vulcanized Rubber and Thermoplastic Elastomer of 143 lb/in.

F. STATEMENTS

1. Statement letter of conformance, complying with **FBC-2007** and **FBC-2010**, dated March 08, 2012, issued by MCY Engineering, Inc., signed and sealed by Yiping Wang, P.E. ***(Submitted under previous NOA No. 12-0405.06)***
2. Statement letter of no financial interest, dated July 11, 2012, issued by MCY Engineering, Inc., signed and sealed by Yiping Wang, P.E.
   (Submitted under previous NOA No. 12-0405.06)
3. Notification of Successor Engineer for manufacturer's NOA document per **Section 61G15-27.001** of the **Florida Administrative Code**, notifying original engineer that the successor engineer is assuming full professional and legal responsibility for all engineering documents pertaining to this NOA, dated March 1, 2012, signed and sealed by Yiping Wang, P.E. ***(Submitted under previous NOA No. 12-0405.06)***
4. Laboratory compliance letter for Test Reports No. **HTL–0242–0217–05,** Specimens **M8, M9, M12a, M13** and **M14** and No. **HTL-0242-0310-07,** Specimens **M8a** and **M8b**, issued by Hurricane Test Laboratory, Inc., dated 05/11/07, signed and sealed by Vinu J. Abraham, P.E.
   (Submitted under previous NOA No. 07–1219.15)

G. OTHERS

1. Notice of Acceptance No. 12-0405.06, issued to NR Architectural Products for their "Series 6000 Aluminum Window Wall System – S.M.I.", approved on 07/19/12 and expiring on 04/24/13.

Jaime D. Gascon, P.E.
Product Control Section Supervisor
NOA No. 13-0212.10
Expiration Date: April 24, 2018
Approval Date: May 09, 2013

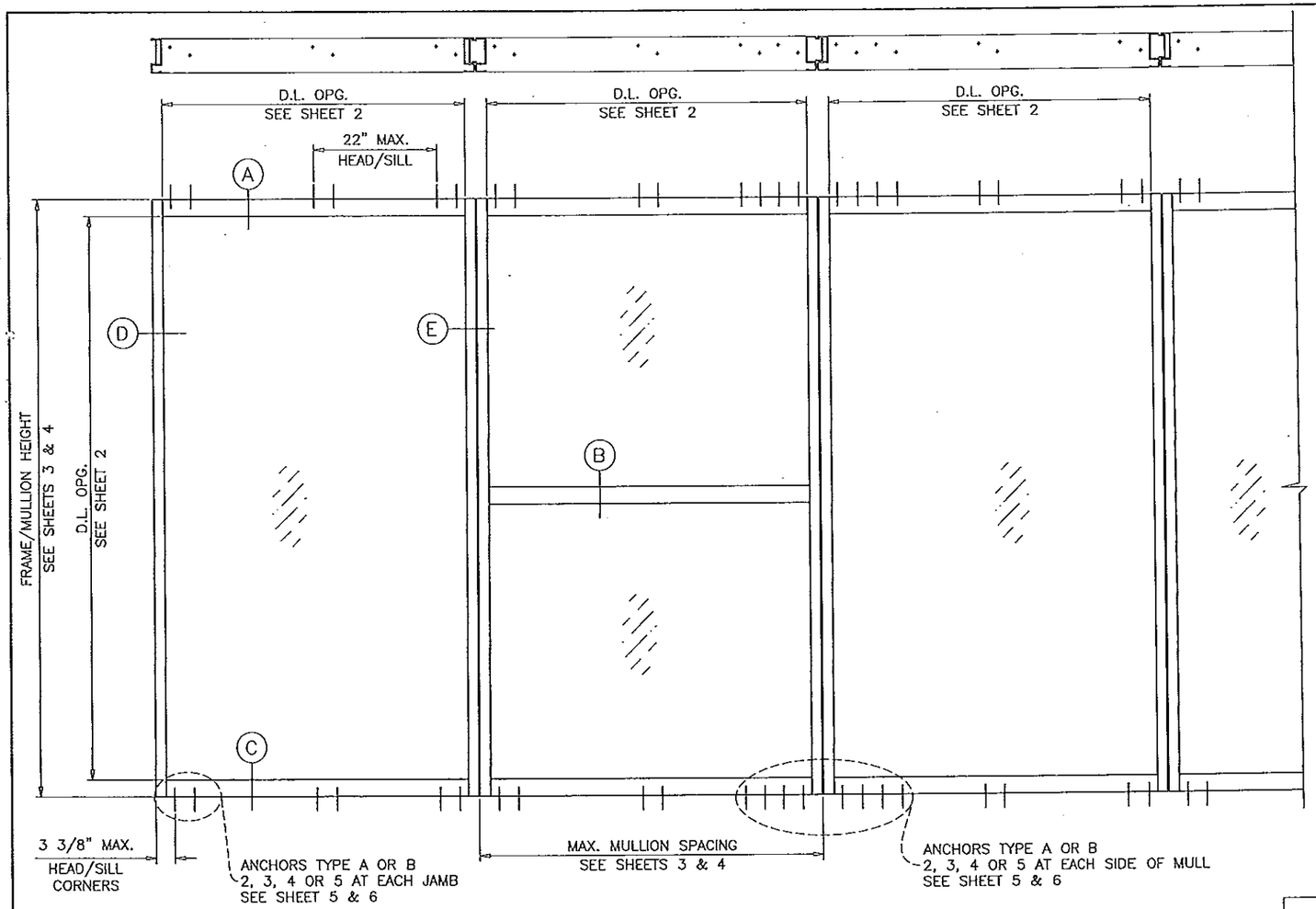

TYPICAL ELEVATIONS

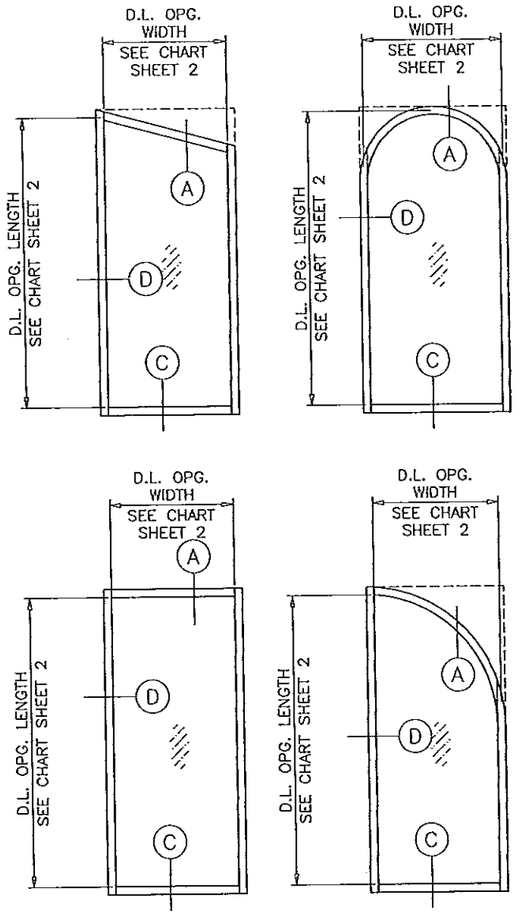

ALLOWABLE LOADS FOR ALTERNATE SHAPES AS SHOWN ABOVE OR SIMILAR CAN BE VERIFIED BY INSCRIBING PICTURE WINDOW SHAPE WITHIN SQUARE OR RECTANGLE AS SHOWN IN DOTTED LINES AND OBTAINING ALLOWABLE LOADS FROM THOSE SHAPES.

NRAP FIXED WINDOW WALL SYSTEM SERIES 6000

THIS SYSTEM IS RATED FOR SMALL MISSILE IMPACT.
MIAMI--DADE COUNTY APPROVED IMPACT RESISTANT SHUTTERS
REQUIRED FOR INSTALLATIONS UP TO 30 FT. OF GRADE.
SHUTTERS NOT REQD. FOR INSTALLATIONS ABOVE 30 FT. OF GRADE.

CODE REQUIREMENTS FOR SAFEGUARDS MUST BE OBSERVED.

THIS PRODUCT HAS BEEN DESIGNED AND TESTED TO COMPLY WITH THE REQUIREMENTS OF THE FLORIDA BUILDING CODE INCLUDING HIGH VELOCITY HURRICANE ZONE (HVHZ).

WOOD BUCKS BY OTHERS, MUST BE ANCHORED PROPERLY TO TRANSFER LOADS TO THE STRUCTURE.

ANCHORS SHALL BE AS LISTED, SPACED AS SHOWN ON DETAILS, ANCHORS EMBEDMENT TO BASE MATERIAL SHALL BE BEYOND WALL DRESSING OR STUCCO.

ANCHORING OR LOADING CONDITIONS NOT SHOWN IN THESE DETAILS ARE NOT PART OF THIS APPROVAL.

A LOAD DURATION INCREASE IN ALLOWABLE STRESS IS USED IN DESIGN OF ANCHORS INTO WOOD ONLY.

MATERIALS INCLUDING BUT NOT LIMITED TO STEEL/METAL SCREWS, THAT COME INTO CONTACT WITH OTHER DISSIMILAR MATERIALS SHALL MEET THE REQUIREMENTS OF FLORIDA BUILDING CODE SECTION 2003.8.4

INSTRUCTIONS:

USE CHARTS AS FOLLOWS.

STEP 1 DETERMINE DESIGN WIND LOAD REQUIREMENT BASED ON WIND VELOCITY, BLDG. HEIGHT, WIND ZONE USING APPLICABLE ASCE 7 STANDARD.

STEP 2 SEE CHARTS ON SHEET 2 FOR DESIGN LOAD CAPACITY OF DESIRED GLASS SIZE.

STEP 3 CHECK MULLION CAPACITY FOR A GIVEN SPACING AND HEIGHT USING CHARTS ON SHEETS 3 & 4 THE CAPACITY SHOULD EXCEED THE DESIGN LOAD.

STEP 4 USING CHARTS ON SHEET 5 & 6 SELECT ANCHOR OPTION WITH DESIGN RATING MORE THAN DESIGN LOAD SPECIFIED IN STEP 1 ABOVE.

STEP 5 THE LOWEST VALUE RESULTING FROM STEPS 2, 3 AND 4 SHALL APPLY TO ENTIRE SYSTEM.

PRODUCT RENEWED
as complying with the Florida Building Code
Acceptance No 13-0212.10
Expiration Date 4/24/2018
By
Miami Dade Product Control

PRODUCT REVISED
as complying with the Florida Building Code
Acceptance No 12-0405.6
Expiration Date April 24, 2013
By Manuel Perez MAR 08 2012
Miami Dade Product Control

LAMINATED GLASS
SMALL MISSILE IMPACT

YIRING WANG, P.E.
FLORIDA REGISTRATION
No. 55983
C.A.N. 28677
STATE OF FLORIDA
PROFESSIONAL ENGINEER
YIRING WANG
LICENSE

REVISIONS	
NO.	DATE / DESCRIPTION

MCY ENGINEERING, INC.
GLAZING CONSULTANTS
8501 SW 124 AVE. STE. 205A
MIAMI, FL. 33183
P: 305.271.0117
F: 786.573.5063
www.MCYEngineering.com
MCY.Engineering@Att.net

NRAP FIXED WINDOW WALL SYS. SERIES 6000 (S.M.I.)

NR ARCHITECTURAL PRODUCTS, INC.
4348 WESTROADS DRIVE
WEST PALM BEACH, FL. 33407
P: (561) 844 - 1121 F: (561) 844 - 6131

DATE	02-20-12
SCALE	AS NOTED
DRAWN	S.L.
PROJECT	12-026

DRAWING NO.
AD12-02

GLASS LOAD CAPACITY - PSF		
NOMINAL DIMS.		LAM. GLASS
D.L.O. WIDTH	D.L.O. HEIGHT	EXT.(+)/INT.(-)
32-1/4"	78"	140.0
38-1/4"		140.0
44-1/4"		140.0
50-1/4"		140.0
56-1/4"		140.0
62-1/4"		137.5
68-1/4"		133.7
32-1/4"	84"	140.0
38-1/4"		140.0
44-1/4"		140.0
50-1/4"		140.0
56-1/4"		136.6
62-1/4"		132.5
68-1/4"		124.4
32-1/4"	90"	140.0
38-1/4"		140.0
44-1/4"		140.0
50-1/4"		139.0
56-1/4"		131.9
62-1/4"		122.9
68-1/4"		115.2
32-1/4"	96"	140.0
38-1/4"		140.0
44-1/4"		140.0
50-1/4"		131.2
56-1/4"		122.7
62-1/4"		113.7
32-1/4"	102"	140.0
38-1/4"		140.0
44-1/4"		139.5
50-1/4"		126.5
56-1/4"		114.7
62-1/4"		106.7
32-1/4"	108"	140.0
38-1/4"		140.0
44-1/4"		133.3
50-1/4"		119.4
56-1/4"		107.6
32-1/4"	113"	140.0
38-1/4"		140.0
44-1/4"		128.9
50-1/4"		114.4
56-1/4"		102.5
57-1/2"		100.9
32-1/4"	120"	140.0
38-1/4"		140.0
44-1/4"		126.3
32-1/4"	125"	140.0
38-1/4"		140.0
44-1/4"		122.4

NOTE:
GLASS CAPACITIES ON THIS SHEET ARE
BASED ON ASTM E1300-04 (3 SEC. GUSTS).

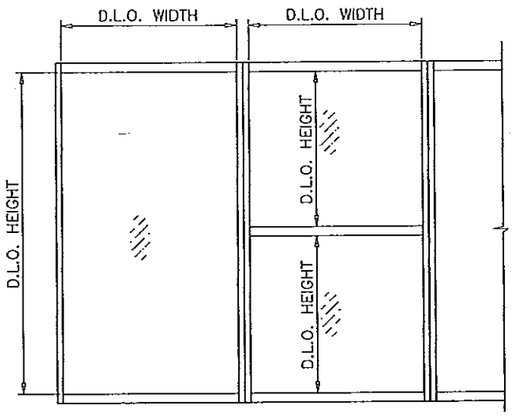

D.L.O. WIDTH = PANEL WIDTH - 3.75"
D.L.O. HEIGHT = PANEL HEIGHT - 6.0"

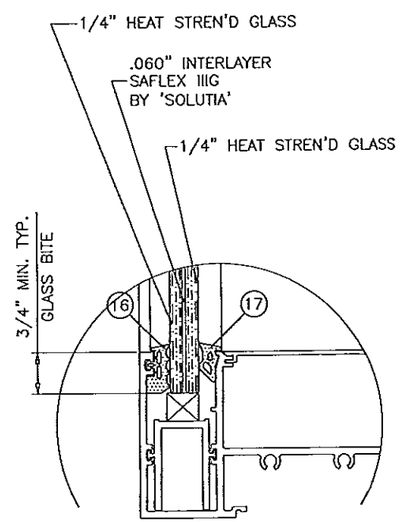

GLASS TYPE 'A'

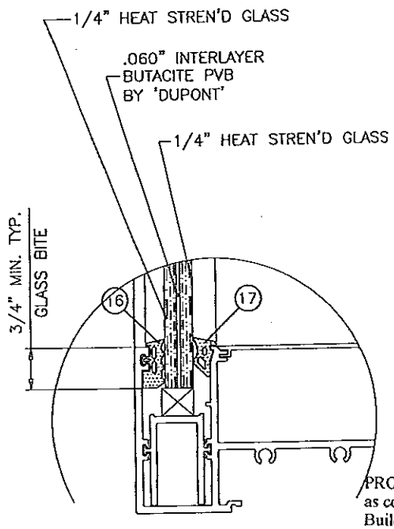

GLASS TYPE 'B'

GLAZING OPTIONS

PRODUCT RENEWED
as complying with the Florida
Building Code
Acceptance No 13-0212.10
Expiration Date 4/24/2018
By
Miami Dade Product Control

PRODUCT REVISED
as complying with the Florida
Building Code
Acceptance No 12-0405.06
Expiration Date April 24 2013
By Manuel Perez
Miami Dade Product Control

MAR 08 2012

YIPING WANG, P.E.
FLORIDA REGISTRATION
PE #55983
C.A.N. 28677
STATE OF FLORIDA

REVISIONS

NO	DATE	DESCRIPTION

MCY ENGINEERING, INC.
GLAZING CONSULTANTS
8501 SW 124 AVE. STE. 205A
MIAMI, FL. 33183
P: 305.271.0117
F: 786.573.5063
www.MCYEngineering.com
MCY.Engineering@Att.net

NRAP FIXED WINDOW WALL SYS. SERIES 6000 (S.M.I.)

NR ARCHITECTURAL PRODUCTS, INC.
4348 WESTROADS DRIVE
WEST PALM BEACH, FL. 33407
P: (561) 844 - 1121 F: (561) 844 - 6131

DATE	02-20-12
SCALE	AS NOTED
DRAWN	S.L
PROJECT	12-026

DRAWING NO.
AD12-02

MULLION LOAD CAPACITY – PSF
MULLIONS WITHOUT INTERMEDIATE HORIZONTALS

NOMINAL DIMS.		JAMB 'J1'		MULL 'M1'		MULL 'M2'		JAMB 'J2' MULL 'M3'		MULL 'M4'		JAMB 'J3'	
WIDTH (W)	FRAME HEIGHT	EXT.(+)	INT.(–)	EXT.(+)	INT.(–)	EXT.(+)	INT.(–)	EXT.(+)	INT.(–)	EXT.(+)	INT.(–)	EXT.(+)	INT.(–)
36"	84"	120.0	140.0	120.0	140.0	120.0	140.0	120.0	140.0	102.0	102.0	120.0	140.0
42"		120.0	140.0	120.0	140.0	120.0	140.0	120.0	140.0	102.0	102.0	120.0	140.0
48"		120.0	140.0	120.0	140.0	120.0	140.0	120.0	140.0	102.0	102.0	120.0	140.0
54"		120.0	140.0	120.0	140.0	120.0	140.0	120.0	140.0	102.0	102.0	120.0	140.0
60"		120.0	140.0	120.0	140.0	120.0	140.0	120.0	140.0	102.0	102.0	120.0	140.0
66"		120.0	140.0	120.0	140.0	120.0	140.0	120.0	140.0	102.0	102.0	120.0	140.0
72"		120.0	140.0	120.0	140.0	120.0	140.0	120.0	140.0	102.0	102.0	120.0	140.0
36"	90"	120.0	140.0	120.0	140.0	120.0	140.0	120.0	140.0	102.0	102.0	120.0	140.0
42"		120.0	140.0	120.0	140.0	120.0	140.0	120.0	140.0	102.0	102.0	120.0	140.0
48"		120.0	140.0	120.0	140.0	120.0	140.0	120.0	140.0	102.0	102.0	120.0	140.0
54"		120.0	140.0	120.0	140.0	120.0	140.0	120.0	140.0	102.0	102.0	120.0	140.0
60"		120.0	140.0	120.0	140.0	120.0	140.0	120.0	140.0	102.0	102.0	120.0	140.0
66"		120.0	140.0	120.0	140.0	120.0	140.0	120.0	140.0	102.0	102.0	120.0	140.0
72"		120.0	140.0	120.0	140.0	120.0	140.0	120.0	140.0	102.0	102.0	120.0	140.0
36"	96"	120.0	140.0	120.0	140.0	120.0	140.0	120.0	140.0	102.0	102.0	120.0	140.0
42"		120.0	140.0	120.0	140.0	120.0	140.0	120.0	140.0	102.0	102.0	120.0	140.0
48"		120.0	140.0	120.0	140.0	120.0	140.0	120.0	140.0	102.0	102.0	120.0	140.0
54"		120.0	140.0	120.0	140.0	120.0	140.0	120.0	140.0	102.0	102.0	120.0	140.0
60"		120.0	140.0	120.0	140.0	120.0	140.0	120.0	140.0	102.0	102.0	120.0	140.0
66"		120.0	140.0	120.0	140.0	120.0	140.0	120.0	140.0	102.0	102.0	120.0	140.0
72"		120.0	140.0	120.0	140.0	120.0	140.0	120.0	140.0	102.0	102.0	120.0	140.0
36"	102"	120.0	140.0	120.0	140.0	120.0	140.0	120.0	140.0	102.0	102.0	120.0	140.0
42"		120.0	140.0	120.0	140.0	120.0	140.0	120.0	140.0	102.0	102.0	120.0	140.0
48"		120.0	140.0	120.0	140.0	120.0	140.0	120.0	140.0	102.0	102.0	120.0	140.0
54"		120.0	140.0	120.0	140.0	120.0	140.0	120.0	140.0	102.0	102.0	120.0	140.0
60"		120.0	140.0	120.0	140.0	120.0	140.0	120.0	140.0	102.0	102.0	120.0	140.0
66"		120.0	140.0	120.0	140.0	120.0	140.0	120.0	140.0	102.0	102.0	120.0	132.8
72"		120.0	138.4	120.0	138.4	120.0	138.4	120.0	138.4	100.8	100.8	120.0	125.6
36"	108"	120.0	140.0	120.0	140.0	120.0	140.0	120.0	140.0	102.0	102.0	120.0	140.0
42"		120.0	140.0	120.0	140.0	120.0	140.0	120.0	140.0	102.0	102.0	120.0	140.0
48"		120.0	140.0	120.0	140.0	120.0	140.0	120.0	140.0	102.0	102.0	120.0	140.0
54"		120.0	140.0	120.0	140.0	120.0	140.0	120.0	140.0	102.0	102.0	120.0	134.7
60"		120.0	140.0	120.0	140.0	120.0	140.0	120.0	140.0	102.0	102.0	120.0	123.8
66"		120.0	140.0	120.0	140.0	120.0	140.0	120.0	140.0	102.0	102.0	115.4	115.4
36"	114"	120.0	140.0	120.0	140.0	120.0	140.0	120.0	140.0	102.0	102.0	120.0	140.0
42"		120.0	140.0	120.0	140.0	120.0	140.0	120.0	140.0	102.0	102.0	120.0	140.0
48"		120.0	140.0	120.0	140.0	120.0	140.0	120.0	140.0	102.0	102.0	120.0	131.4
54"		120.0	140.0	120.0	140.0	120.0	140.0	120.0	140.0	102.0	102.0	118.8	118.8
60"		120.0	140.0	120.0	140.0	120.0	140.0	120.0	140.0	102.0	102.0	108.9	108.9
36"	119"	120.0	140.0	120.0	140.0	120.0	140.0	120.0	140.0	102.0	102.0	120.0	140.0
42"		120.0	140.0	120.0	140.0	120.0	140.0	120.0	140.0	102.0	102.0	120.0	134.5
48"		120.0	140.0	120.0	140.0	120.0	140.0	120.0	140.0	102.0	102.0	119.2	119.2
54"		120.0	139.9	120.0	139.9	120.0	140.0	120.0	140.0	102.0	102.0	107.6	107.6
60"		120.0	128.1	120.0	128.1	120.0	135.9	120.0	140.0	102.0	102.0	98.5	98.5
61"		120.0	126.4	120.0	126.4	120.0	134.0	120.0	140.0	102.0	102.0	97.2	97.2
36"	126"	102.0	120.0	--	--	102.0	120.0	--	--	--	--	--	--
42"		102.0	120.0	--	--	102.0	120.0	--	--	--	--	--	--
48"		102.0	108.7	--	--	102.0	108.7	--	--	--	--	--	--
36"	131"	102.0	120.0	--	--	102.0	120.0	--	--	--	--	--	--
42"		102.0	115.2	--	--	102.0	115.2	--	--	--	--	--	--
48"		102.0	103.6	--	--	102.0	103.6	--	--	--	--	--	--

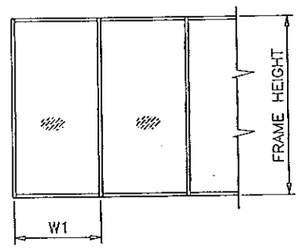

WIDTH (W) = W1
AT FRAME JAMB

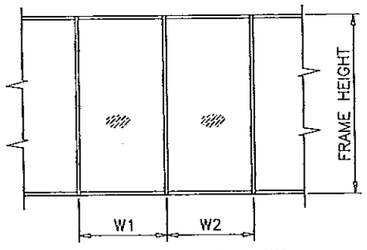

WIDTH (W) = $\frac{W1 + W2}{2}$
AT FRAME MULLION

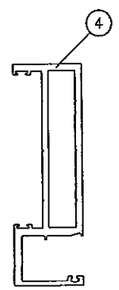

JAMB 'J1'

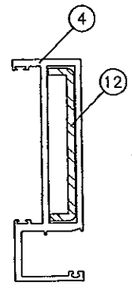

JAMB 'J2'

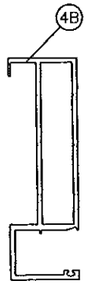

JAMB 'J3'

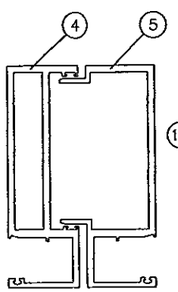

MULLION 'M1'

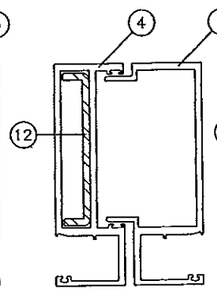

MULLION 'M2'

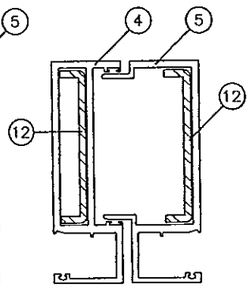

MULLION 'M3'

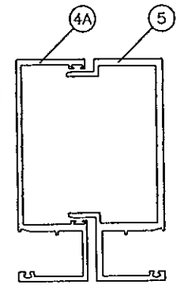

MULLION 'M4'

PRODUCT RENEWED
as complying with the Florida
Building Code
Acceptance No 13-0212.10
Expiration Date 4/24/2018
By
Miami Dade Product Control

PRODUCT REVISED
as complying with the Florida
Building Code
Acceptance No 12-0405.06
Expiration Date April 24, 2013
By
Miami Dade Product Control

MAR 08 2012

YIPING WANG, P.E.
FLORIDA REGISTRATION
PE #55983
C.A.N. 28677
No 55983
STATE OF
FLORIDA
PROFESSIONAL ENGINEER

REVISIONS

NO.	DATE	DESCRIPTION

MCY ENGINEERING, INC.
GLAZING CONSULTANTS
8501 SW 124 AVE. STE. 205A
MIAMI, FL. 33183
P: 305.271.0117
F: 786.573.5063
www.MCYEngineering.com
MCY.Engineering@Att.net

NRAP FIXED WINDOW WALL SYS. SERIES 6000 (S.M.I.)

NR ARCHITECTURAL PRODUCTS, INC.
4348 WESTROADS DRIVE
WEST PALM BEACH, FL. 33407
P: (561) 844 - 1121 F: (561) 844 - 6131

DATE	02-20-12
SCALE	AS NOTED
DRAWN	S.L
PROJECT	12-028

DRAWING NO.
AD12-02

SHEET 3 of 10

MULLION LOAD CAPACITY – PSF
MULLIONS WITH INTERMEDIATE HORIZONTALS

NOMINAL DIMS.		JAMB 'J1'		MULL 'M1'		MULL 'M2'		JAMB 'J2' MULL 'M3'		MULL 'M4'		JAMB 'J3'	
WIDTH (W)	FRAME HEIGHT	EXT.(+)	INT.(–)	EXT.(+)	INT.(–)	EXT.(+)	INT.(–)	EXT.(+)	INT.(–)	EXT.(+)	INT.(–)	EXT.(+)	INT.(–)
36"	84"	120.0	140.0	120.0	140.0	120.0	140.0	120.0	140.0	102.0	102.0	120.0	140.0
42"		120.0	140.0	120.0	140.0	120.0	140.0	120.0	140.0	102.0	102.0	120.0	140.0
48"		120.0	140.0	120.0	140.0	120.0	140.0	120.0	140.0	102.0	102.0	120.0	140.0
54"		120.0	140.0	120.0	140.0	120.0	140.0	120.0	140.0	102.0	102.0	120.0	140.0
60"		120.0	140.0	120.0	140.0	120.0	140.0	120.0	140.0	102.0	102.0	120.0	140.0
66"		120.0	140.0	120.0	140.0	120.0	140.0	120.0	140.0	102.0	102.0	120.0	140.0
72"		120.0	140.0	120.0	140.0	120.0	140.0	120.0	140.0	102.0	102.0	120.0	140.0
36"	90"	120.0	140.0	120.0	140.0	120.0	140.0	120.0	140.0	102.0	102.0	120.0	140.0
42"		120.0	140.0	120.0	140.0	120.0	140.0	120.0	140.0	102.0	102.0	120.0	140.0
48"		120.0	140.0	120.0	140.0	120.0	140.0	120.0	140.0	102.0	102.0	120.0	140.0
54"		120.0	140.0	120.0	140.0	120.0	140.0	120.0	140.0	102.0	102.0	120.0	140.0
60"		120.0	140.0	120.0	140.0	120.0	140.0	120.0	140.0	102.0	102.0	120.0	140.0
66"		120.0	140.0	120.0	140.0	120.0	140.0	120.0	140.0	102.0	102.0	120.0	140.0
72"		120.0	140.0	120.0	140.0	120.0	140.0	120.0	140.0	102.0	102.0	120.0	140.0
36"	96"	120.0	140.0	120.0	140.0	120.0	140.0	120.0	140.0	102.0	102.0	120.0	140.0
42"		120.0	140.0	120.0	140.0	120.0	140.0	120.0	140.0	102.0	102.0	120.0	140.0
48"		120.0	140.0	120.0	140.0	120.0	140.0	120.0	140.0	102.0	102.0	120.0	140.0
54"		120.0	140.0	120.0	140.0	120.0	140.0	120.0	140.0	102.0	102.0	120.0	140.0
60"		120.0	140.0	120.0	140.0	120.0	140.0	120.0	140.0	102.0	102.0	120.0	140.0
66"		120.0	140.0	120.0	140.0	120.0	140.0	120.0	140.0	102.0	102.0	120.0	134.6
72"		120.0	140.0	120.0	140.0	120.0	140.0	120.0	140.0	102.0	102.0	120.0	123.3
36"	102"	120.0	140.0	120.0	140.0	120.0	140.0	120.0	140.0	102.0	102.0	120.0	140.0
42"		120.0	140.0	120.0	140.0	120.0	140.0	120.0	140.0	102.0	102.0	120.0	140.0
48"		120.0	140.0	120.0	140.0	120.0	140.0	120.0	140.0	102.0	102.0	120.0	140.0
54"		120.0	140.0	120.0	140.0	120.0	140.0	120.0	140.0	102.0	102.0	120.0	140.0
60"		120.0	140.0	120.0	140.0	120.0	140.0	120.0	140.0	102.0	102.0	120.0	129.9
66"		120.0	140.0	120.0	140.0	120.0	140.0	120.0	140.0	102.0	102.0	118.1	118.1
72"		120.0	138.4	120.0	138.4	120.0	138.4	120.0	140.0	100.8	100.8	108.2	108.2
36"	108"	120.0	140.0	120.0	140.0	120.0	140.0	120.0	140.0	102.0	102.0	120.0	140.0
42"		120.0	140.0	120.0	140.0	120.0	140.0	120.0	140.0	102.0	102.0	120.0	140.0
48"		120.0	140.0	120.0	140.0	120.0	140.0	120.0	140.0	102.0	102.0	120.0	140.0
54"		120.0	140.0	120.0	140.0	120.0	140.0	120.0	140.0	102.0	102.0	120.0	127.5
60"		120.0	140.0	120.0	140.0	120.0	140.0	120.0	140.0	102.0	102.0	114.8	114.8
66"		120.0	135.0	120.0	135.0	120.0	137.5	120.0	140.0	102.0	102.0	104.4	104.4
36"	114"	120.0	140.0	120.0	140.0	120.0	140.0	120.0	140.0	102.0	102.0	120.0	140.0
42"		120.0	140.0	120.0	140.0	120.0	140.0	120.0	140.0	102.0	102.0	120.0	140.0
48"		120.0	140.0	120.0	140.0	120.0	140.0	120.0	140.0	102.0	102.0	120.0	127.6
54"		120.0	140.0	120.0	140.0	120.0	140.0	120.0	140.0	102.0	102.0	113.4	113.4
60"		120.0	132.2	120.0	132.2	120.0	135.8	120.0	140.0	102.0	102.0	102.1	102.1
36"	119"	120.0	140.0	120.0	140.0	120.0	140.0	120.0	140.0	102.0	102.0	120.0	140.0
42"		120.0	140.0	120.0	140.0	120.0	140.0	120.0	140.0	102.0	102.0	120.0	132.9
48"		120.0	140.0	120.0	140.0	120.0	140.0	120.0	140.0	102.0	102.0	116.3	116.3
54"		120.0	134.0	120.0	134.0	120.0	138.5	120.0	140.0	102.0	102.0	103.4	103.4
60"		120.0	120.6	120.0	120.6	120.0	124.6	120.0	140.0	98.8	98.8	93.0	93.0
61"		118.6	118.6	118.6	118.6	120.0	122.6	120.0	140.0	97.2	97.2	91.5	91.5
36"	126"	102.0	117.3	–	–	102.0	117.3	–	–	–	–	–	–
42"		100.6	100.6	–	–	100.6	100.6	–	–	–	–	–	–
48"		88.0	88.0	–	–	88.0	88.0	–	–	–	–	–	–
36"	131"	102.0	112.9	–	–	102.0	112.9	–	–	–	–	–	–
42"		96.7	96.7	–	–	96.7	96.7	–	–	–	–	–	–
48"		84.7	84.7	–	–	84.7	84.7	–	–	–	–	–	–

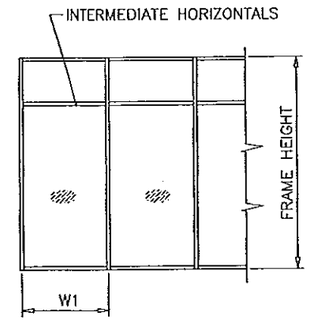

WIDTH (W) = W1
AT FRAME JAMB

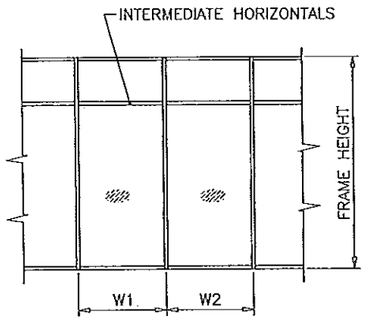

WIDTH (W) = $\frac{W1 + W2}{2}$
AT FRAME MULLION

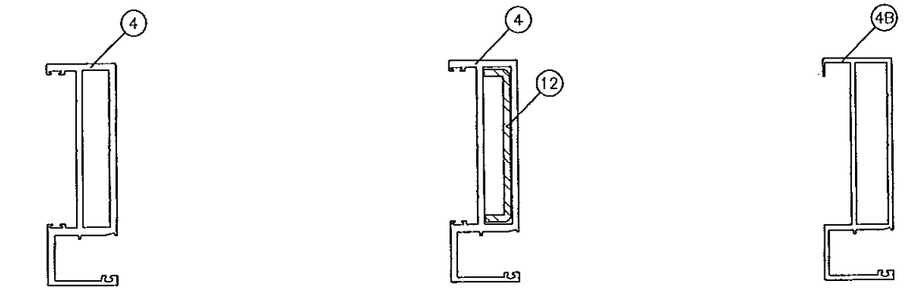

JAMB 'J1' JAMB 'J2' JAMB 'J3'

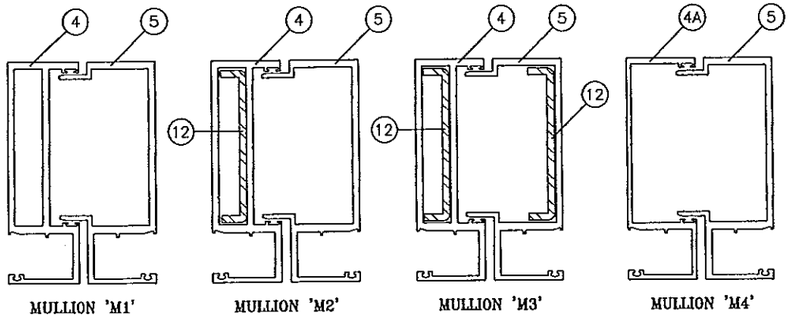

MULLION 'M1' MULLION 'M2' MULLION 'M3' MULLION 'M4'

PRODUCT RENEWED
as complying with the Florida Building Code
Acceptance No. 13-0212.10
Expiration Date 4/24/2018
By
Miami Dade Product Control

PRODUCT REVISED
as complying with the Florida Building Code
Acceptance No 12-0405.06
Expiration Date April 24, 2013
By
Miami Dade Product Control

MAR 08 2012

YIPING WANG, P.E.
FLORIDA REGISTRATION
LPE #55983
C.A.N. 28677
No 55983
STATE OF FLORIDA
PROFESSIONAL ENGINEER

REVISIONS	
NO.	DATE / DESCRIPTION

MCY ENGINEERING, INC.
GLAZING CONSULTANTS
8501 SW 124 AVE. STE. 205A
MIAMI, FL 33183
P: 305.271.0117
F: 786.573.5063
www.MCYEngineering.com
MCY.Engineering@Att.net

NRAP FIXED WINDOW WALL SYS. SERIES 6000 (S.M.I.)

NR ARCHITECTURAL PRODUCTS, INC.
4348 WESTROADS DRIVE
WEST PALM BEACH, FL. 33407
P: (561) 844 - 1121 F: (561) 844 - 6131

DATE	02-20-12
SCALE	AS NOTED
DRAWN	S.L
PROJECT	12-026

DRAWING NO.
AD12-02

ANCHOR LOAD CAPACITY – PSF
MULLIONS WITHOUT INTERMEDIATE HORIZONTALS
EXT.(+) & INT.(–)

NOMINAL DIMENSION		1/2" MAX. SHIM												1/2" MAX. SHIM		
		ANCHOR TYPE 'A'			ANCHOR TYPE 'AA'			ANCHOR TYPE 'C'			ANCHOR TYPE 'D'			ANCHOR TYPE 'AA'		ANCHOR TYPE 'B'
WIDTH (W)	FRAME HEIGHT	A4	A6	A8	AA4	AA6	AA8	C6	C8	C10	D6	D8	D10	AA4	AA6	B4
36"	84"	140.0	140.0	140.0	140.0	140.0	140.0	140.0	140.0	140.0	140.0	140.0	140.0	140.0	140.0	140.0
42"		140.0	140.0	140.0	140.0	140.0	140.0	140.0	140.0	140.0	140.0	140.0	140.0	140.0	140.0	140.0
48"		140.0	140.0	140.0	140.0	140.0	140.0	139.2	140.0	140.0	140.0	140.0	140.0	140.0	140.0	140.0
54"		140.0	140.0	140.0	140.0	140.0	140.0	130.2	140.0	140.0	140.0	140.0	140.0	140.0	140.0	140.0
60"		140.0	140.0	140.0	140.0	140.0	140.0	123.7	140.0	140.0	140.0	140.0	140.0	140.0	140.0	140.0
66"		140.0	140.0	140.0	140.0	140.0	140.0	119.1	140.0	140.0	140.0	140.0	140.0	140.0	140.0	140.0
72"		140.0	140.0	140.0	140.0	140.0	140.0	116.0	140.0	140.0	140.0	140.0	140.0	140.0	140.0	140.0
36"	90"	140.0	140.0	140.0	140.0	140.0	140.0	140.0	140.0	140.0	140.0	140.0	140.0	140.0	140.0	140.0
42"		140.0	140.0	140.0	140.0	140.0	140.0	138.3	140.0	140.0	140.0	140.0	140.0	140.0	140.0	140.0
48"		140.0	140.0	140.0	140.0	140.0	140.0	126.5	140.0	140.0	140.0	140.0	140.0	140.0	140.0	140.0
54"		140.0	140.0	140.0	140.0	140.0	140.0	117.8	140.0	140.0	140.0	140.0	140.0	140.0	140.0	140.0
60"		140.0	140.0	140.0	140.0	140.0	140.0	111.4	140.0	140.0	140.0	140.0	140.0	140.0	140.0	140.0
66"		140.0	140.0	140.0	140.0	140.0	140.0	106.6	140.0	140.0	140.0	140.0	140.0	140.0	140.0	140.0
72"		140.0	140.0	140.0	140.0	140.0	140.0	103.1	137.5	140.0	140.0	140.0	140.0	140.0	140.0	140.0
36"	96"	140.0	140.0	140.0	140.0	140.0	140.0	140.0	140.0	140.0	140.0	140.0	140.0	140.0	140.0	140.0
42"		140.0	140.0	140.0	140.0	140.0	140.0	127.3	140.0	140.0	140.0	140.0	140.0	140.0	140.0	140.0
48"		140.0	140.0	140.0	140.0	140.0	140.0	116.0	140.0	140.0	140.0	140.0	140.0	140.0	140.0	140.0
54"		140.0	140.0	140.0	140.0	140.0	140.0	107.6	140.0	140.0	140.0	140.0	140.0	140.0	140.0	140.0
60"		138.8	140.0	140.0	140.0	140.0	140.0	101.2	135.0	140.0	140.0	140.0	140.0	140.0	140.0	140.0
66"		132.2	140.0	140.0	140.0	140.0	140.0	96.4	128.6	140.0	138.8	140.0	140.0	140.0	140.0	140.0
72"		127.2	140.0	140.0	140.0	140.0	140.0	92.8	123.7	140.0	128.8	140.0	140.0	140.0	140.0	140.0
36"	102"	140.0	140.0	140.0	140.0	140.0	140.0	132.6	140.0	140.0	140.0	140.0	140.0	140.0	140.0	140.0
42"		140.0	140.0	140.0	140.0	140.0	140.0	117.8	140.0	140.0	140.0	140.0	140.0	140.0	140.0	140.0
48"		140.0	140.0	140.0	140.0	140.0	140.0	107.1	140.0	140.0	140.0	140.0	140.0	140.0	140.0	140.0
54"		135.7	140.0	140.0	140.0	140.0	140.0	99.0	132.0	140.0	137.4	140.0	140.0	140.0	140.0	140.0
60"		127.2	140.0	140.0	140.0	140.0	140.0	92.8	123.7	140.0	128.8	140.0	140.0	140.0	140.0	140.0
66"		120.7	140.0	140.0	135.1	140.0	140.0	88.0	117.4	140.0	122.2	140.0	140.0	140.0	140.0	140.0
72"		115.6	140.0	140.0	129.5	140.0	140.0	84.4	112.5	140.0	117.1	140.0	140.0	140.0	140.0	140.0
36"	108"	140.0	140.0	140.0	140.0	140.0	140.0	123.7	140.0	140.0	140.0	140.0	140.0	140.0	140.0	140.0
42"		140.0	140.0	140.0	140.0	140.0	140.0	109.7	140.0	140.0	140.0	140.0	140.0	140.0	140.0	140.0
48"		136.3	140.0	140.0	140.0	140.0	140.0	99.4	132.6	140.0	138.0	140.0	140.0	140.0	140.0	140.0
54"		125.6	140.0	140.0	140.0	140.0	140.0	91.7	122.2	140.0	127.2	140.0	140.0	140.0	140.0	140.0
60"		117.4	140.0	140.0	131.4	140.0	140.0	85.7	114.2	140.0	118.9	140.0	140.0	140.0	140.0	140.0
66"		111.0	140.0	140.0	124.3	140.0	140.0	81.0	108.0	135.0	112.4	140.0	140.0	140.0	140.0	140.0
36"	114"	140.0	140.0	140.0	140.0	140.0	140.0	116.0	140.0	140.0	140.0	140.0	140.0	140.0	140.0	140.0
42"		140.0	140.0	140.0	140.0	140.0	140.0	102.6	136.8	140.0	140.0	140.0	140.0	140.0	140.0	140.0
48"		127.2	140.0	140.0	140.0	140.0	140.0	92.8	123.7	140.0	128.8	140.0	140.0	140.0	140.0	140.0
54"		117.0	140.0	140.0	130.9	140.0	140.0	85.3	113.8	140.0	118.4	140.0	140.0	140.0	140.0	140.0
60"		109.0	140.0	140.0	122.1	140.0	140.0	79.5	106.1	132.6	110.4	140.0	140.0	140.0	140.0	140.0
36"	119"	140.0	140.0	140.0	140.0	140.0	140.0	110.3	140.0	140.0	140.0	140.0	140.0	140.0	140.0	140.0
42"		133.5	140.0	140.0	140.0	140.0	140.0	97.4	129.9	140.0	135.2	140.0	140.0	140.0	140.0	140.0
48"		120.5	140.0	140.0	134.9	140.0	140.0	87.9	117.2	140.0	122.0	140.0	140.0	140.0	140.0	140.0
54"		110.6	140.0	140.0	123.8	140.0	140.0	80.7	107.6	134.5	112.0	140.0	140.0	140.0	140.0	140.0
60"		102.9	140.0	140.0	115.2	140.0	140.0	75.1	100.1	125.1	104.2	138.9	140.0	140.0	140.0	140.0
61"		101.8	140.0	140.0	114.0	140.0	140.0	74.3	99.0	123.8	103.1	137.4	140.0	140.0	140.0	140.0
36"	126"	120.0	120.0	120.0	120.0	120.0	120.0	103.1	120.0	120.0	120.0	120.0	120.0	120.0	120.0	140.0
42"		120.0	120.0	120.0	120.0	120.0	120.0	90.9	120.0	120.0	120.0	120.0	120.0	120.0	120.0	140.0
48"		112.2	120.0	120.0	120.0	120.0	120.0	81.9	109.2	120.0	113.6	120.0	120.0	120.0	120.0	140.0
36"	131"	120.0	120.0	120.0	120.0	120.0	120.0	98.5	120.0	120.0	120.0	120.0	120.0	120.0	120.0	140.0
42"		118.9	120.0	120.0	120.0	120.0	120.0	86.8	11.6	120.0	120.0	120.0	120.0	120.0	120.0	140.0
48"		107.0	120.0	120.0	119.8	120.0	120.0	78.1	104.1	120.0	108.3	120.0	120.0	120.0	120.0	140.0

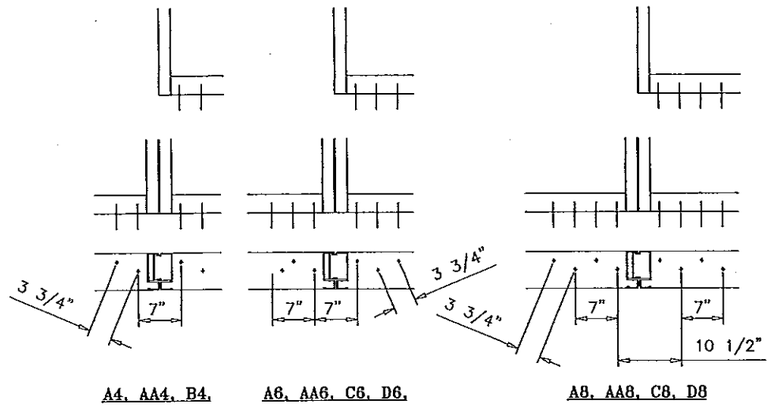

A4, AA4, B4. A6, AA6, C6, D6. A8, AA8, C8, D8

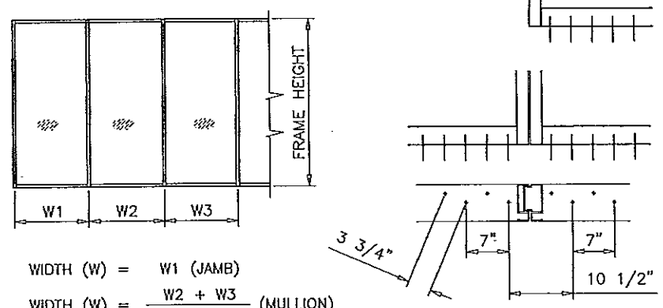

WIDTH (W) = W1 (JAMB)

WIDTH (W) = $\frac{W2 + W3}{2}$ (MULLION)

C10, D10

ANCHORS TYPES: SEE SHEET 6 FOR DESCRIPTION

A4 = (2) ANCHORS TYPE 'A' AT EACH SIDE OF JAMB & MULLION
AA4 = (2) ANCHORS TYPE 'AA' AT EACH SIDE OF JAMB & MULLION
B4 = (2) ANCHORS TYPE 'B' AT EACH SIDE OF JAMB & MULLION

A6 = (3) ANCHORS TYPE 'A' AT EACH SIDE OF JAMB & MULLION
AA6 = (3) ANCHORS TYPE 'AA' AT EACH SIDE OF JAMB & MULLION
C6 = (3) ANCHORS TYPE 'C' AT EACH SIDE OF JAMB & MULLION
D6 = (3) ANCHORS TYPE 'D' AT EACH SIDE OF JAMB & MULLION

A8 = (4) ANCHORS TYPE 'A' AT EACH SIDE OF JAMB & MULLION
AA8 = (4) ANCHORS TYPE 'AA' AT EACH SIDE OF JAMB & MULLION
C8 = (4) ANCHORS TYPE 'C' AT EACH SIDE OF JAMB & MULLION
D8 = (4) ANCHORS TYPE 'D' AT EACH SIDE OF JAMB & MULLION

C10 = (5) ANCHORS TYPE 'C' AT EACH SIDE OF JAMB & MULLION
D10 = (5) ANCHORS TYPE 'D' AT EACH SIDE OF JAMB & MULLION

ALL OTHER ANCHORS TO BE SPACED AS PER ELEVATION.

PRODUCT RENEWED
as complying with the Florida
Building Code
Acceptance No 13-0212.10
Expiration Date 4/24/2018
By
Miami Dade Product Control

PRODUCT REVISED
as complying with the Florida
Building Code
Acceptance No 12-0405.06
Expiration Date APR 24 2013
By
Miami Dade Product Control

MAR 08 2012

YIPING WANG, P.E.
FLORIDA REGISTRATION
LIC. #55983
C.A.N. 28677
No 55983
STATE OF FLORIDA
PROFESSIONAL ENGINEER

REVISIONS		
NO	DATE	DESCRIPTION

MCY ENGINEERING, INC.
GLAZING CONSULTANTS
8501 SW 124 AVE. STE. 205A
MIAMI, FL. 33183
P: 305.271.0117
F: 786.573.5063
www.MCYEngineering.com
MCY.Engineering@Att.net

NRAP FIXED WINDOW WALL SYS. SERIES 6000 (S.M.I.)

NR ARCHITECTURAL PRODUCTS, INC.
4348 WESTROADS DRIVE
WEST PALM BEACH, FL 33407
P: (561) 844 - 1121 F: (561) 844 - 6131

DATE	02-20-12
SCALE	AS NOTED
DRAWN	S.L.
PROJECT	12-026

DRAWING NO.
AD12-02

ANCHOR LOAD CAPACITY – PSF
MULLIONS WITHOUT INTERMEDIATE HORIZONTALS
EXT.(+) & INT.(–)

NOMINAL DIMENSION		1/2" MAX. SHIM												1/2" MAX. SHIM		
		ANCHOR TYPE 'A'			ANCHOR TYPE 'AA'			ANCHOR TYPE 'C'			ANCHOR TYPE 'D'			ANCHOR TYPE 'AA'		ANCHOR TYPE 'B'
WIDTH (W)	FRAME HEIGHT	A4	A6	A8	AA4	AA6	AA8	C6	C8	C10	D6	D8	D10	AA4	AA6	B4
36"	84"	140.0	140.0	140.0	140.0	140.0	140.0	132.6	140.0	140.0	140.0	140.0	140.0	140.0	140.0	140.0
42"		140.0	140.0	140.0	140.0	140.0	140.0	113.6	140.0	140.0	140.0	140.0	140.0	140.0	140.0	140.0
48"		136.3	140.0	140.0	140.0	140.0	140.0	99.4	132.6	140.0	138.0	140.0	140.0	140.0	140.0	140.0
54"		121.1	140.0	140.0	135.6	140.0	140.0	88.4	117.8	140.0	122.7	140.0	140.0	140.0	140.0	140.0
60"		109.0	140.0	140.0	122.1	140.0	140.0	79.5	106.1	132.6	110.4	140.0	140.0	140.0	140.0	140.0
66"		99.1	140.0	140.0	111.0	140.0	140.0	72.3	96.4	120.5	100.4	133.8	140.0	140.0	140.0	140.0
72"		90.9	136.3	140.0	101.7	140.0	140.0	66.3	88.4	110.5	92.0	122.7	140.0	140.0	140.0	140.0
36"	90"	140.0	140.0	140.0	140.0	140.0	140.0	123.7	140.0	140.0	140.0	140.0	140.0	140.0	140.0	140.0
42"		140.0	140.0	140.0	140.0	140.0	140.0	106.1	140.0	140.0	140.0	140.0	140.0	140.0	140.0	140.0
48"		127.2	140.0	140.0	140.0	140.0	140.0	92.8	123.7	140.0	128.8	140.0	140.0	140.0	140.0	140.0
54"		113.1	140.0	140.0	126.6	140.0	140.0	82.5	110.0	137.5	114.5	140.0	140.0	140.0	140.0	140.0
60"		101.8	140.0	140.0	113.9	140.0	140.0	74.2	99.0	123.7	103.0	137.4	140.0	140.0	140.0	140.0
66"		92.5	138.8	140.0	103.6	140.0	140.0	67.5	90.0	112.5	93.7	124.9	140.0	140.0	140.0	140.0
72"		84.8	127.2	140.0	94.9	140.0	140.0	61.9	82.5	103.1	85.9	114.5	140.0	140.0	140.0	140.0
36"	96"	140.0	140.0	140.0	140.0	140.0	140.0	116.0	140.0	140.0	140.0	140.0	140.0	140.0	140.0	140.0
42"		136.3	140.0	140.0	140.0	140.0	140.0	99.4	132.6	140.0	138.0	140.0	140.0	140.0	140.0	140.0
48"		119.3	140.0	140.0	133.5	140.0	140.0	87.0	116.0	140.0	120.8	140.0	140.0	140.0	140.0	140.0
54"		106.0	140.0	140.0	118.7	140.0	140.0	77.3	103.1	128.9	107.3	140.0	140.0	140.0	140.0	140.0
60"		95.4	140.0	140.0	106.8	140.0	140.0	69.6	92.8	116.0	96.5	128.8	140.0	140.0	140.0	140.0
66"		86.7	130.1	140.0	97.1	140.0	140.0	63.3	84.4	105.5	87.8	117.1	140.0	140.0	140.0	140.0
72"		79.5	119.3	140.0	89.0	133.5	140.0	58.0	77.3	96.7	80.5	107.3	134.1	134.1	140.0	140.0
36"	102"	140.0	140.0	140.0	140.0	140.0	140.0	109.2	140.0	140.0	140.0	140.0	140.0	140.0	140.0	140.0
42"		128.3	140.0	140.0	140.0	140.0	140.0	93.6	124.8	140.0	129.9	140.0	140.0	140.0	140.0	140.0
48"		112.2	140.0	140.0	125.6	140.0	140.0	81.9	109.2	136.5	113.6	140.0	140.0	140.0	140.0	140.0
54"		99.8	140.0	140.0	111.7	140.0	140.0	72.8	97.0	121.3	101.0	134.7	140.0	140.0	140.0	140.0
60"		89.8	134.7	140.0	100.5	140.0	140.0	65.5	87.3	109.2	90.9	121.2	140.0	140.0	140.0	140.0
66"		81.6	122.4	140.0	91.4	137.1	140.0	59.6	79.4	99.3	82.7	110.2	137.7	137.7	140.0	140.0
72"		74.8	112.2	140.0	83.8	125.6	140.0	54.6	72.8	91.0	75.8	101.0	126.2	126.2	140.0	140.0
36"	108"	140.0	140.0	140.0	140.0	140.0	140.0	103.1	137.5	140.0	140.0	140.0	140.0	140.0	140.0	140.0
42"		121.1	140.0	140.0	135.6	140.0	140.0	88.4	117.8	140.0	122.7	140.0	140.0	140.0	140.0	140.0
48"		106.0	140.0	140.0	118.7	140.0	140.0	77.3	103.1	128.9	107.3	140.0	140.0	140.0	140.0	140.0
54"		94.2	140.0	140.0	105.5	140.0	140.0	68.7	91.7	114.6	95.4	127.2	140.0	140.0	140.0	140.0
60"		84.8	127.2	140.0	94.9	140.0	140.0	61.9	82.5	103.1	85.9	114.5	140.0	140.0	140.0	140.0
66"		77.1	115.6	140.0	86.3	129.5	140.0	56.2	75.0	93.7	78.1	104.1	130.1	130.1	140.0	140.0
36"	114"	133.9	140.0	140.0	140.0	140.0	140.0	97.7	130.2	140.0	135.6	140.0	140.0	140.0	140.0	140.0
42"		114.8	140.0	140.0	128.5	140.0	140.0	83.7	111.6	139.5	116.2	140.0	140.0	140.0	140.0	140.0
48"		100.4	140.0	140.0	112.4	140.0	140.0	73.3	97.7	122.1	101.7	135.6	140.0	140.0	140.0	140.0
54"		89.3	133.9	140.0	99.9	140.0	140.0	65.1	86.8	108.5	90.4	120.5	140.0	140.0	140.0	140.0
60"		80.3	120.5	140.0	89.9	134.9	140.0	58.6	78.1	97.7	81.3	108.5	135.6	135.5	140.0	140.0
36"	119"	128.3	140.0	140.0	140.0	140.0	140.0	93.6	124.8	140.0	129.9	140.0	140.0	140.0	140.0	140.0
42"		109.9	140.0	140.0	123.1	140.0	140.0	80.2	106.9	133.7	111.3	140.0	140.0	140.0	140.0	140.0
48"		96.2	140.0	140.0	107.7	140.0	140.0	70.2	93.6	117.0	97.4	129.9	140.0	140.0	140.0	140.0
54"		85.5	128.3	140.0	95.7	140.0	140.0	62.4	83.2	104.0	86.6	115.5	140.0	140.0	140.0	140.0
60"		77.0	115.4	140.0	86.2	129.2	140.0	56.1	74.9	93.6	77.9	103.9	129.9	129.8	140.0	140.0
61"		75.7	113.5	140.0	84.7	127.1	140.0	55.2	73.6	92.0	76.7	102.2	127.8	127.7	140.0	140.0
36"	126"	120.0	120.0	120.0	120.0	120.0	120.0	88.4	117.8	120.0	120.0	120.0	120.0	120.0	120.0	140.0
42"		103.8	120.0	120.0	116.2	120.0	120.0	75.8	101.0	120.0	105.1	120.0	120.0	120.0	120.0	140.0
48"		90.9	120.0	120.0	101.7	120.0	120.0	66.3	88.4	110.5	92.0	120.0	120.0	120.0	120.0	140.0
36"	131"	116.5	120.0	120.0	120.0	120.0	120.0	85.0	113.3	120.0	118.0	120.0	120.0	120.0	120.0	140.0
42"		99.9	120.0	120.0	111.8	120.0	120.0	72.9	97.2	120.0	101.1	120.0	120.0	120.0	120.0	140.0
48"		87.4	120.0	120.0	97.8	120.0	120.0	63.8	85.0	106.3	88.5	118.0	120.0	120.0	120.0	140.0

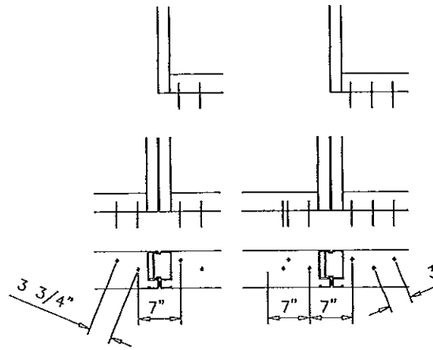

A4, AA4, B4,

A6, AA6, C6, D6,

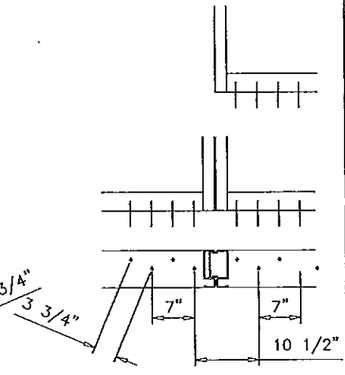

A8, AA8, C8, D8

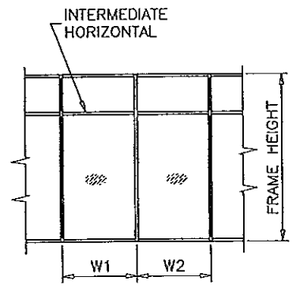

WIDTH (W) = $\frac{W1 + W2}{2}$ (MULLION)

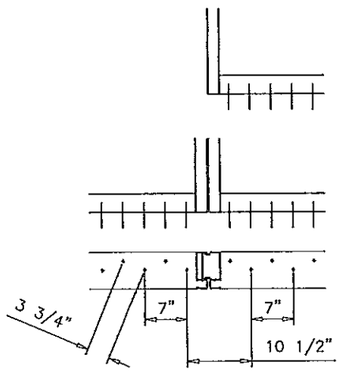

C10, D10

ANCHORS TYPES: SEE SHEET 6 FOR DESCRIPTION

A4 = (2) ANCHORS TYPE 'A' AT EACH SIDE OF JAMB & MULLION
AA4 = (2) ANCHORS TYPE 'AA' AT EACH SIDE OF JAMB & MULLION
B4 = (2) ANCHORS TYPE 'B' AT EACH SIDE OF JAMB & MULLION

A6 = (3) ANCHORS TYPE 'A' AT EACH SIDE OF JAMB & MULLION
AA6 = (3) ANCHORS TYPE 'AA' AT EACH SIDE OF JAMB & MULLION
C6 = (3) ANCHORS TYPE 'C' AT EACH SIDE OF JAMB & MULLION
D6 = (3) ANCHORS TYPE 'D' AT EACH SIDE OF JAMB & MULLION

A8 = (4) ANCHORS TYPE 'A' AT EACH SIDE OF JAMB & MULLION
AA8 = (4) ANCHORS TYPE 'AA' AT EACH SIDE OF JAMB & MULLION
C8 = (4) ANCHORS TYPE 'C' AT EACH SIDE OF JAMB & MULLION
D8 = (4) ANCHORS TYPE 'D' AT EACH SIDE OF JAMB & MULLION

C10 = (5) ANCHORS TYPE 'C' AT EACH SIDE OF JAMB & MULLION
D10 = (5) ANCHORS TYPE 'D' AT EACH SIDE OF JAMB & MULLION

ALL OTHER ANCHORS TO BE SPACED AS PER ELEVATION.

PRODUCT RENEWED
as complying with the Florida Building Code
Acceptance No 13-0212.10
Expiration Date 4/24/2018
By
Miami Dade Product Control

PRODUCT REVISED
as complying with the Florida Building Code
Acceptance No 12.0405.06
Expiration Date APRIL 24, 2013
By
Miami Dade Product Control
MAR 08 2012

YIPING WANG, P.E.
FLORIDA REGISTRATION
LIC.#55983
C.A.N. 28677
No 55983
STATE OF FLORIDA
PROFESSIONAL ENGINEER

REVISIONS

NO	DATE	DESCRIPTION

MCY ENGINEERING, INC.
GLAZING CONSULTANTS
8501 SW 124 AVE. STE. 205A
MIAMI, FL. 33183
P: 305.271.0117
F: 786.573.5063
www.MCYEngineering.com
MCY.Engineering@Att.net

NRAP FIXED WINDOW WALL SYS. SERIES 6000 (S.M.I.)

NR ARCHITECTURAL PRODUCTS, INC.
4348 WESTROADS DRIVE
WEST PALM BEACH, FL. 33407
P: (561) 844 - 1121 F: (561) 844 - 6131

DATE	02-20-12
SCALE	AS NOTED
DRAWN	S.L.
PROJECT	12-026

DRAWING NO.
AD12-02

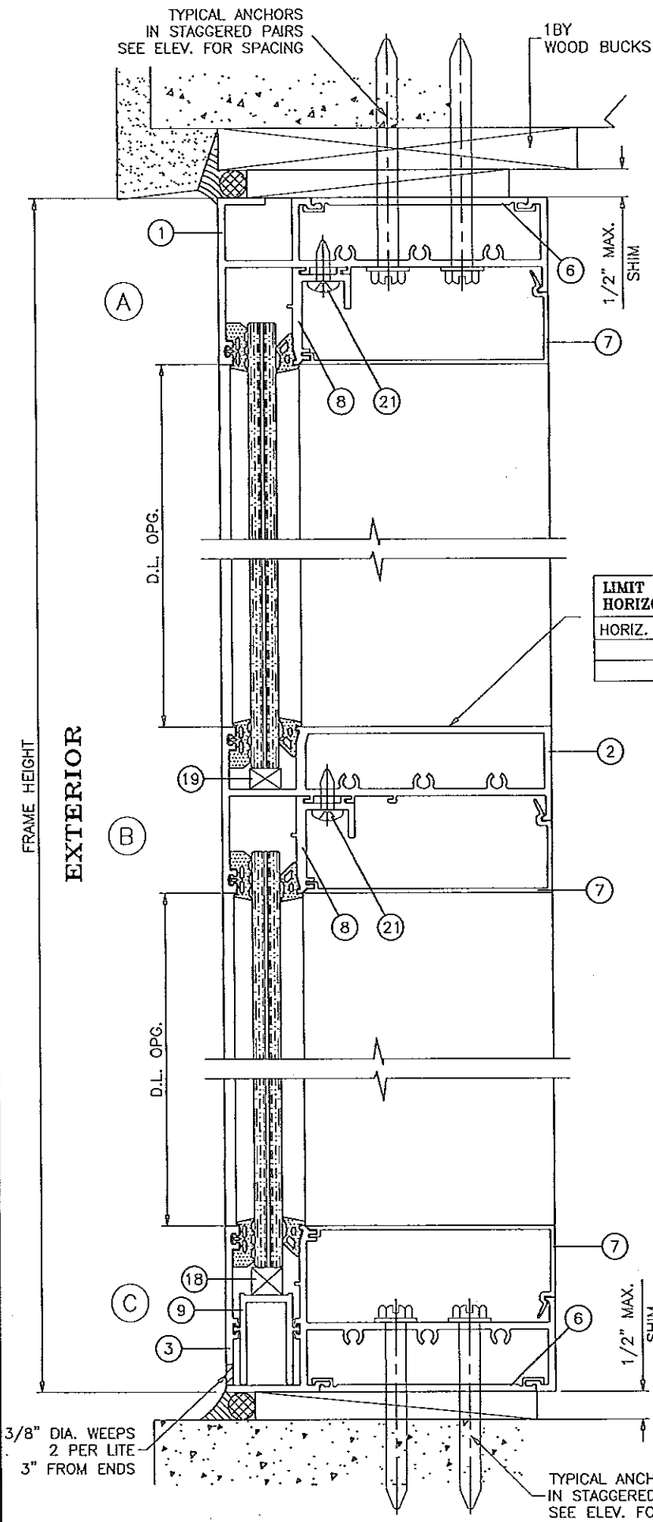

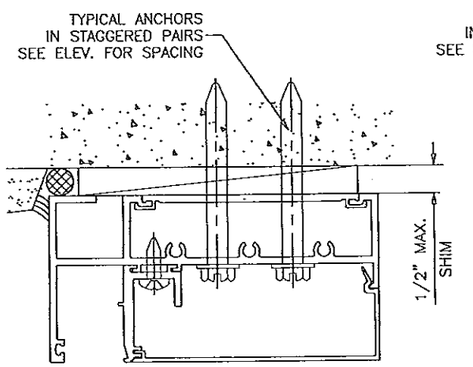

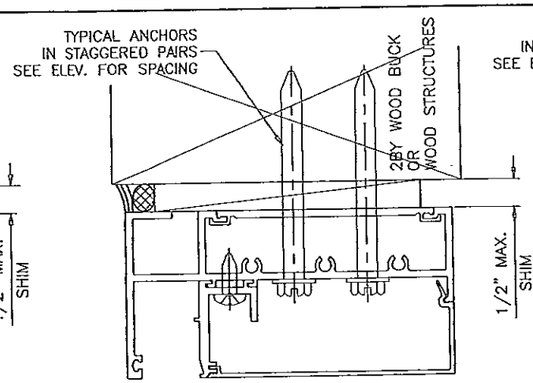

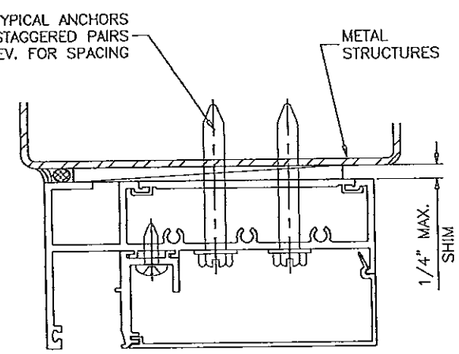

LIMIT MAX. DESIGN LOADS FOR HORIZONTAL AS FOLLOWS	
HORIZ. SPAN MAX.	LAM. GLASS
72"	132 PSF
66"	140 PSF

WOOD BUCKS AND METAL STRUCTURES NOT BY N.R. WDW. MUST SUPPORT LOADS IMPOSED BY GLAZING SYSTEM AND TRANSFER THEM TO THE BUILDING STRUCTURE.

TYPICAL ANCHORS: SEE ELEV. FOR SPACING

TYPE 'A'– 3/8" DIA. WEDGE–BOLT ANCHOR BY 'POWERS'
THRU 1BY OR 2BY WOOD BUCKS INTO CONCRETE
WITH 1–1/2" MIN. PENETRATION INTO WOOD

TYPE 'AA'– 3/8" DIA. WEDGE–BOLT ANCHOR BY 'POWERS'
DIRECTLY INTO CONCRETE
WITH 1–1/4" MIN. EMBED INTO CONC.

TYPE 'B'– 3/8" DIA. MACHINE BOLT GRADE 5 W/ WASHER & NUT
INTO METAL STRUCTURES
STEEL : 12 GA. MIN. (Fy = 36 KSI MIN.)
ALUMINUM : 1/8" THK. MIN. (6063–T6 MIN.)
(STEEL IN CONTACT WITH ALUMINUM TO BE PLATED OR PAINTED)

TYPE 'C'– 3/8" DIA. LAG SCREWS
INTO WOOD STRUCTURES
WITH 2–1/4" MIN. EMBED INTO WOOD

TYPE 'D'– 5/16" DIA. TAPCON BY 'ITW' (Fu = 120 KSI, Fy = 92 KSI)
INTO WOOD STRUCTURES
WITH 2–1/4" MIN. EMBED INTO WOOD

ANCHOR EDGE DISTANCES
INTO CONCRETE AND MASONRY = 3" MIN.
INTO WOOD STRUCTURE = 1–1/2" MIN.
INTO METAL STRUCTURE = 1" MIN.

SEALANTS:

ALL FRAME CORNERS AND JOINTS SEALED WITH
DOW–795 OR TREMCO SPECTREM 2 SILICONE SEALANT.

PRODUCT RENEWED
as complying with the Florida
Building Code
Acceptance No 13-0212.10
Expiration Date 4/24/2018
By
Miami Dade Product Control

PRODUCT REVISED
as complying with the Florida
Building Code
Acceptance No 12-0405.06
Expiration Date 4/24/2013
By
Miami Dade Product Control
MAR 08 2012

YIPING WANG, P.E.
FLORIDA REGISTRATION
LIPE #55983
C.A.N. 28677
No 55983
STATE OF FLORIDA
PROFESSIONAL ENGINEER

REVISIONS		
NO.	DATE	DESCRIPTION

MCY ENGINEERING, INC.
GLAZING CONSULTANTS
8501 SW 124 AVE. STE. 205A
MIAMI, FL. 33183
P: 305.271.0117
F: 786.573.5063
www.MCYEngineering.com
MCY.Engineering@att.net

NRAP FIXED WINDOW WALL SYS. SERIES 6000 (S.M.I.)

NR ARCHITECTURAL PRODUCTS, INC.
4348 WESTROADS DRIVE
WEST PALM BEACH, FL. 33407
P: (561) 844 - 1121 F: (561) 844 - 6131

DATE	02–20–12
SCALE	AS NOTED
DRAWN	S.I.
PROJECT	12–026

DRAWING NO.
AD12–02

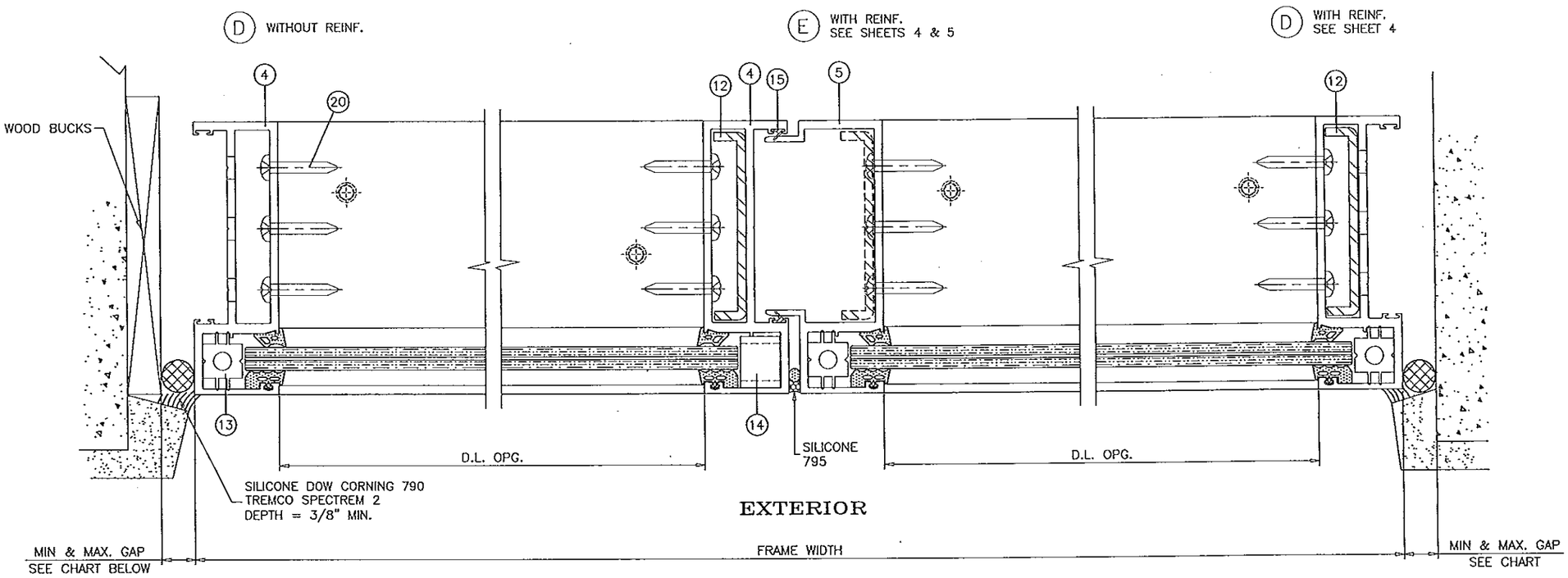

MAX. FRAME HEIGHT	GAP	
	MIN.	MAX.
114"	3/8"	1/2"
131"	1/2"	3/4"

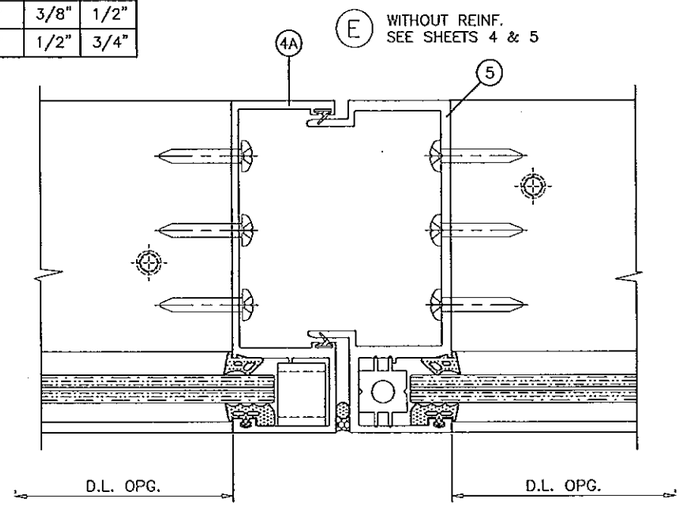

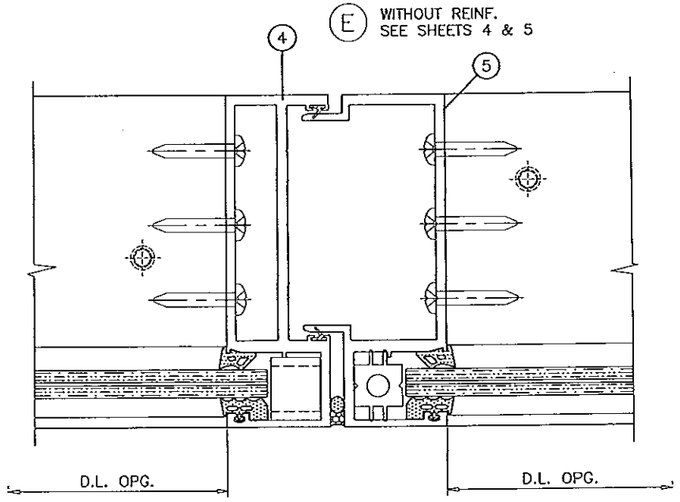

PRODUCT RENEWED
as complying with the Florida
Building Code
Acceptance No 13-0212.10
Expiration Date 4/24/2018
By
Miami Dade Product Control

PRODUCT REVISED
as complying with the Florida
Building Code
Acceptance No 12-0405.06
Expiration Date April 24, 2013
By
Miami Dade Product Control
MAR 08 2012

YIPING WANG, P.E.
FLORIDA REGISTRATION
PE #55983
C.A.N. 28677
STATE OF FLORIDA
PROFESSIONAL ENGINEER

REVISIONS		
NO	DATE	DESCRIPTION

MCY ENGINEERING, INC.
GLAZING CONSULTANTS
8501 SW 124 AVE. STE. 205A
MIAMI, FL. 33183
P: 305.271.0117
F: 786.573.5063
www.MCYEngineering.com
MCY.Engineering@Att.net

NRAP FIXED WINDOW WALL SYS. SERIES 6000 (S.M.I.)

NR ARCHITECTURAL PRODUCTS, INC.
4348 WESTROADS DRIVE
WEST PALM BEACH, FL. 33407
P: (561) 844 - 1121 F: (561) 844 - 6131

DATE	02-20-12
SCALE	AS NOTED
DRAWN	S.I.
PROJECT	12-026

DRAWING NO.
AD12-02

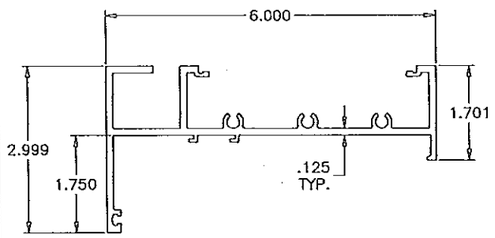

1 FRAME HEAD

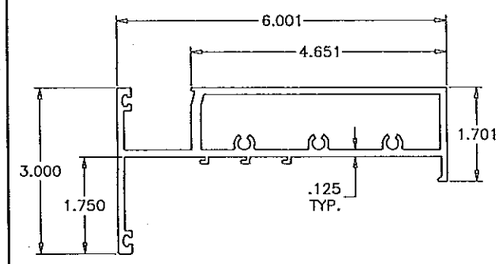

2 INTERMEDIATE HORIZONTAL

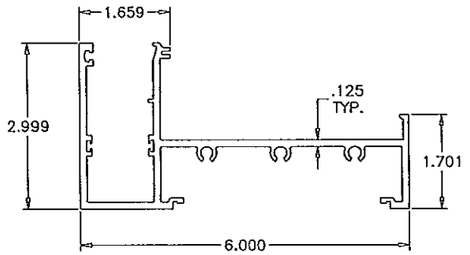

3 FRAME SILL

4 FRAME JAMB/FEMALE MULLION

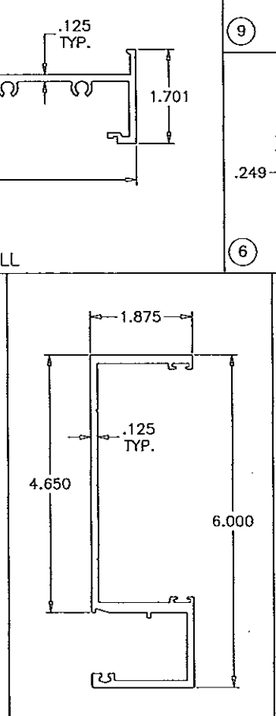

4A ALT. FEMALE MULLION

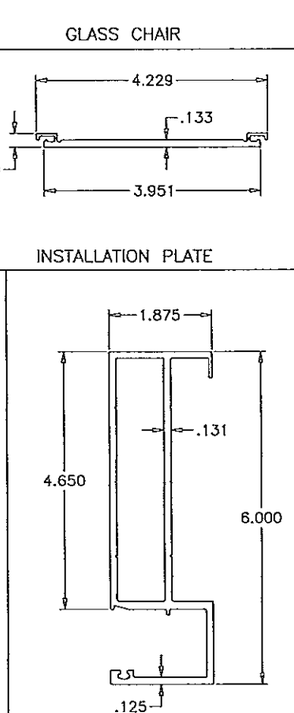

4B ALT. FRAME JAMB

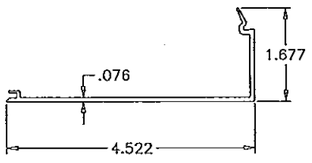

7 SNAP ON COVER

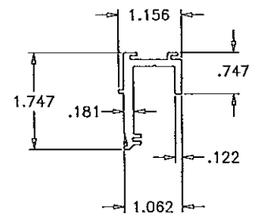

8 GLASS STOP

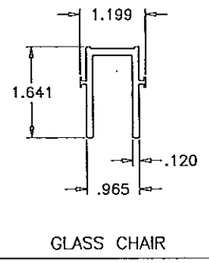

9 GLASS CHAIR

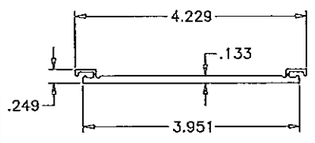

6 INSTALLATION PLATE

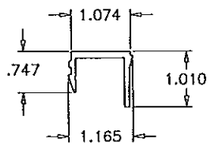

10 POCKET FILLER

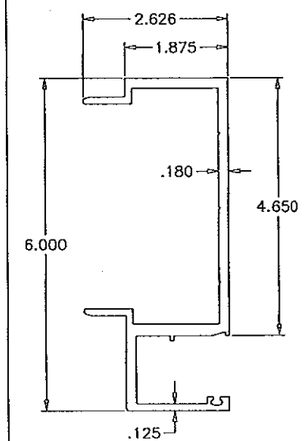

5 MALE MULLION

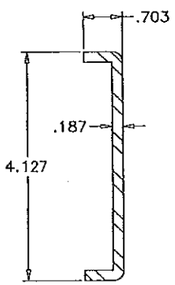

12 REINFORCING CHANNEL

ITEM NO.	PART NUMBER	QUANTITY	DESCRIPTION	MATERIAL	MANF./SUPPLIER/REMARKS
1	FW001S	AS REQD.	FRAME HEAD	6063--T6	--
2	FW002S	AS REQD.	INTERMEDIATE HORIZONTAL	6063--T6	--
3	FW003S	AS REQD.	FRAME SILL	6063--T6	--
4	FW004S	AS REQD.	FRAME JAMB/ FEMALE MULLION	6063--T6	--
4A	FW012S	AS REQD.	ALT. FEMALE MULLION	6063--T6	--
4B	FW013S	AS REQD.	ALT. FRAME JAMB	6063--T6	--
5	FW005S	AS REQD.	MALE MULLION	6063--T6	--
6	FW006S	AS REQD.	INSTALLATION PLATE	6063--T6	--
7	FW007S	AS REQD.	SNAP ON COVER	6063--T5	--
8	FW008S	AS REQD.	GLASS STOP	6063--T5	--
9	FW009S	2/ LITE	GLASS CHAIR, 4" LONG	6063--T5	--
10	FW010S	AS REQD.	POCKET FILLER	6063--T5	--
12	SI	AS REQD.	REINFORCING CHANNEL	STEEL	--
13	NR-G1	AS REQD.	SIDE BLOCKS (TR--1456E)	EPDM	--
14	NR-G2	AS REQD.	W BLOCKS (TR-3508E)	EPDM	--
15	NR-G3	AS REQD.	WEATHER FIN (TR-1311E)	EPDM	--
16	NR-G4	AS REQD.	CUSTOM PRE-SET GASKET (TR--13915E)	EPDM	--
17	NR-G5	AS REQD.	INTERIOR WEDGE GASKET (TR--1507E)	EPDM	--
18	NR-G6	AS REQD.	SETTING BLOCK (1/2" X 9/16" X 4" LONG) (TR-1990E)	EPDM	--
19	NR-G7	AS REQD.	SETTING BLOCK (3/8" X 9/16" X 4" LONG) (TR-1008S)	EPDM	--
20	NR--F1	3/ CORNER	FRAME ASS'Y SCREWS (1/4" X 1-1/2" PHP SELF TAPPING)	ST/ST	--
21	NR--F2	AS REQD.	GLASS STOP SCREWS (1/4" X 3/4" PHP SELF TAPPING)	ST/ST	AT 1" FROM ENDS & 18" O.C.

REVISIONS

NO.	DATE	DESCRIPTION

MCY ENGINEERING, INC.
GLAZING CONSULTANTS
8501 SW 124 AVE. STE. 205A
MIAMI, FL 33183
P: 305.271.0117
F: 786.573.5063
www.MCYEngineering.com
MCY.Engineering@Att.net

NRAP FIXED WINDOW WALL SYS. SERIES 6000 (S.M.I.)

NR ARCHITECTURAL PRODUCTS, INC.
4348 WESTROADS DRIVE
WEST PALM BEACH, FL. 33407
P: (561) 844 - 1121 F: (561) 844 - 6131

DATE	02-20-12
SCALE	AS NOTED
DRAWN	S.L.
PROJECT	12-026

DRAWING NO.
AD12-02

SHEET 9 of 10

PRODUCT RENEWED
as complying with the Florida
Building Code
Acceptance No 13-0212.10
Expiration Date 4/24/2013
By
Miami Dade Product Control

PRODUCT REVISED
as complying with the Florida
Building Code
Acceptance No 12-0405.06
Expiration Date April 24, 2013
By
Miami Dade Product Control

YIRING WANG, P.E.
FLORIDA REGISTRATION
PE #55983
C.A. No. 28677
STATE OF FLORIDA
PROFESSIONAL ENGINEER

MAR 08 2012

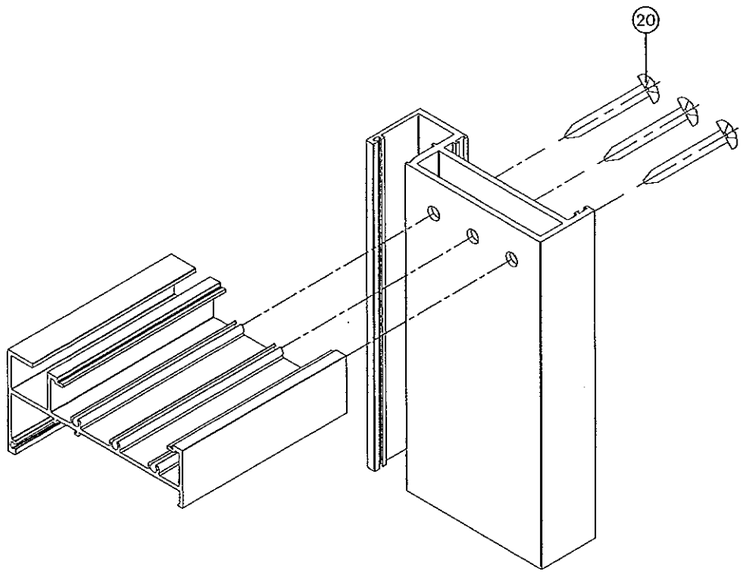

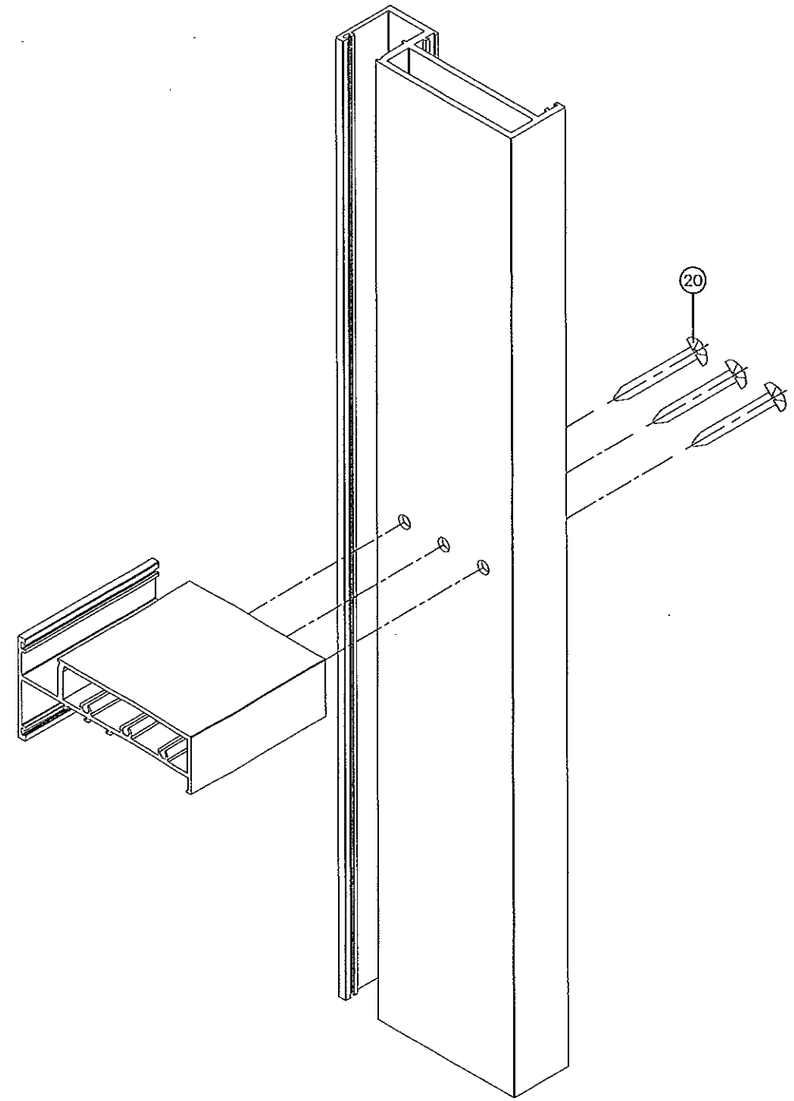

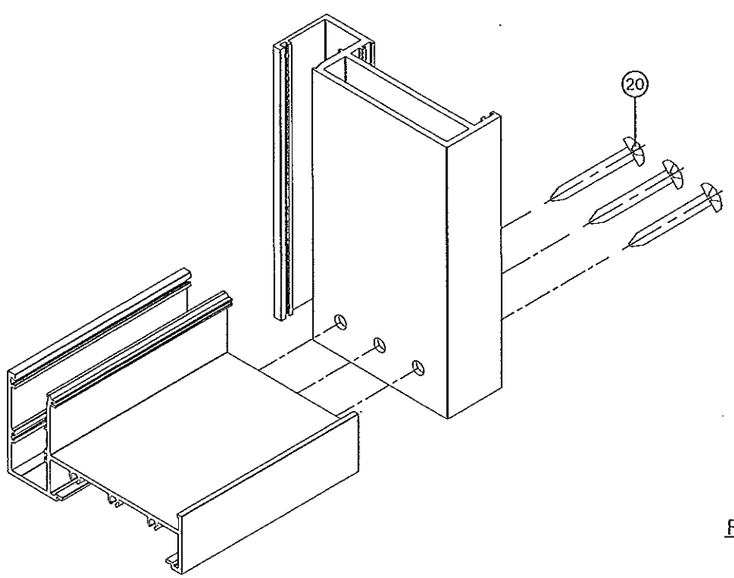

FRAME CORNERS

PRODUCT RENEWED
as complying with the Florida
Building Code
Acceptance No 13-0212.10
Expiration Date 4/24/2018
By
Miami Dade Product Control

PRODUCT REVISED
as complying with the Florida
Building Code
Acceptance No 12-0405.06
Expiration Date April 24, 2013
By
Miami Dade Product Control
MAR 08 2012

YIPING WANG, P.E.
FLORIDA REGISTRATION
PE #55983
CAIN 28677
STATE OF FLORIDA
PROFESSIONAL ENGINEER

REVISIONS		
NO.	DATE	DESCRIPTION

MCY ENGINEERING, INC.
GLAZING CONSULTANTS
8501 SW 124 AVE. STE. 205A
MIAMI, FL. 33183
P: 305.271.0117
F: 786.573.5063
www.MCYEngineering.com
MCY.Engineering@Att.net

NRAP FIXED WINDOW WALL SYS. SERIES 6000 (S.M.I.)

NR ARCHITECTURAL PRODUCTS, INC.
4348 WESTROADS DRIVE
WEST PALM BEACH, FL. 33407
P: (561) 844 - 1121 F: (561) 844 - 6131

DATE	02-20-12
SCALE	AS NOTED
DRAWN	S.L.
PROJECT	12-026

DRAWING NO.
AD12-02

SHEET 10 of 10