MIAMI-DADE COUNTY
PRODUCT CONTROL SECTION
11805 SW 26 Street, Room 208
Miami, Florida 33175-2474
T (786) 315-2590 F (786) 315-2599
www.miamidade.gov/economy

DEPARTMENT OF REGULATORY AND ECONOMIC RESOURCES (RER)
BOARD AND CODE ADMINISTRATION DIVISION

# NOTICE OF ACCEPTANCE (NOA)

**Doralum Corporation**
**7040 N. W. 77 Terrace**
**Medley, FL 33166**

**SCOPE:**

This NOA is being issued under the applicable rules and regulations governing the use of construction materials. The documentation submitted has been reviewed and accepted by Miami-Dade County RER -Product Control Section to be used in Miami Dade County and other areas where allowed by the Authority Having Jurisdiction (AHJ).

This NOA shall not be valid after the expiration date stated below. The Miami-Dade County Product Control Section (In Miami Dade County) and/or the AHJ (in areas other than Miami Dade County) reserve the right to have this product or material tested for quality assurance purposes. If this product or material fails to perform in the accepted manner, the manufacturer will incur the expense of such testing and the AHJ may immediately revoke, modify, or suspend the use of such product or material within their jurisdiction. RER reserves the right to revoke this acceptance, if it is determined by Miami-Dade County Product Control Section that this product or material fails to meet the requirements of the applicable building code.

This product is approved as described herein, and has been designed to comply with the Florida Building Code, including the High Velocity Hurricane Zone.

**DESCRIPTION: Series "100" Aluminum Out swing Doors w/wo Sidelites - Impact**

**APPROVAL DOCUMENT:** Drawing No.**W13-03, Rev A**, titled "Series 100 Alum Swing Door w/ Sidelites", sheets 1 through 10 of 10 (inclusive 3.1), prepared by Al Farooq Corp., dated 01-30-13 and last revised on JUN 25, 2013, signed and sealed by Javad Ahmad, P.E., bearing the Miami-Dade County Product Control Approval stamp with the Notice of Acceptance number and approval date by the Miami-Dade County Product Control Section.

**MISSILE IMPACT RATING: Large and Small Missile Impact Resistant**

**Limitations:**

1. See DP tables for X or XX in sheet **1**, Door w/ sidelites (w/wo reinforcement) in sheet **3.1**. See Single sidelite (standalone) DP capacity in sheet **3**.
2. See allowable mulled configuration in sheet **3.1**, not to exceed (5) panels w/ max **two** mulled sidelites.
3. Max **door** leaf width mulled with sidelites in sheet **3.1**, shall not exceed = 36-7/8". See active panel 4-point locking or active panel dead lock w/ manual bolts option in sheet **4.**
4. Glass lites wider than 36" shall have two setting blocks per FBC requirements.

**LABELING:** Each unit shall bear a permanent label with the manufacturer's name or logo, city, state and series and following statement: "Miami-Dade County Product Control Approved", noted herein.

**RENEWAL** of this NOA shall be considered after a renewal application has been filed and there has been no change in the applicable building code negatively affecting the performance of this product.

**TERMINATION** of this NOA will occur after the expiration date or if there has been a revision or change in the materials, use, and/or manufacture of the product or process. Misuse of this NOA as an endorsement of any product, for sales, advertising or any other purposes shall automatically terminate this NOA. Failure to comply with any section of this NOA shall be cause for termination and removal of NOA.

**ADVERTISEMENT:** The NOA number preceded by the words Miami-Dade County, Florida, and followed by the expiration date may be displayed in advertising literature. If any portion of the NOA is displayed, then it shall be done in its entirety.

**INSPECTION:** A copy of this entire NOA shall be provided to the user by the manufacturer or its distributors and shall be available for inspection at the job site at the request of the Building Official.

This NOA consists of this page 1 and evidence pages E-1, as well as approval document mentioned above

The submitted documentation was reviewed by **Ishaq I. Chanda, P.E.**

MIAMI-DADE COUNTY APPROVED

6/26/13

## NOTICE OF ACCEPTANCE: EVIDENCE SUBMITTED

### A. DRAWINGS

1. Manufacturer's die drawings and sections.
2. Drawing No.**W13-03, Rev A**, titled "Series 100 Alum Swing Door w/ Sidelites", sheets 1 through 10 of 10 (inclusive 3.1), prepared by Al Farooq Corp., dated 01-30-13 and last revised on JUN 25, 2013, signed and sealed by Javad Ahmad, P.E.

### B. TESTS

1. Test reports on: 1) Air Infiltration Test, per FBC, TAS 202-94
   2) Uniform Static Air Pressure Test, Loading per FBC TAS 202-94
   3) Water Resistance Test, per FBC, TAS 202-94
   4) Large Missile Impact Test per FBC, TAS 201-94
   5) Cyclic Wind Pressure Loading per FBC, TAS 203-94
   6) Forced Entry Test, per FBC 2411 3.2.1, TAS 202-94

Along with installation diagram of an outswing doors w/ sidelites prepared by Fenestration Testing Laboratory Inc, dated January 14, 2013, Test Report No **7086 (FTL-12087)**, signed and sealed by Marlin D. Brinson, P. E.

### C. CALCULATIONS

1. Anchor verification calculations and structural analysis, complying with FBC-2010, prepared by Al Farooq Corporation, dated 02/11/13, 05/20/13 and last revised on JUN 25, 2013, signed and sealed by Javad Ahmad, P.E.
2. Glazing complies w/ ASTME-1300-02 & -04

### D. QUALITY ASSURANCE

1. Miami Dade Department of Regulatory and Economic Resources (RER).

### E. MATERIAL CERTIFICATIONS

1. Notice of Acceptance No. **11-0624.02** issued to E.I. DuPont DeNemours & Co., Inc. for their "**DuPont Sentry Glass ® interlayer**", expiring on 01/14/17.
2. Notice of Acceptance No. **11-0624.01** issued to E.I. DuPont DeNemours & Co., Inc. for their "**DuPont Butacite ® PVB interlayer**", expiring on 12/11/16.
3. Notice of Acceptance No. **12-1231.10** issued to Eastman Chemical Company, (Former Solutia Inc.) for "Saflex color & clear interlayer", expiring on 05/21/16.

### F. STATEMENTS

1. Statement letter of conformance and letter of no financial interest, prepared by Al-Farooq Corporation, dated 01/25/13, signed and sealed by Javad Ahmad, P.E.
2. Lab compliance as part of the above referenced test report.

### G. OTHER

1. Test proposal, dated 08/21/12 approved by Jaime D. Gascon, P.E.

Ishaq I. Chanda

**Ishaq I. Chanda, P.E.**
**Product Control Examiner**
**NOA No. 13-0219.07**
**Expiration Date: July 04, 2018**
**Approval Date: July 04, 2013**

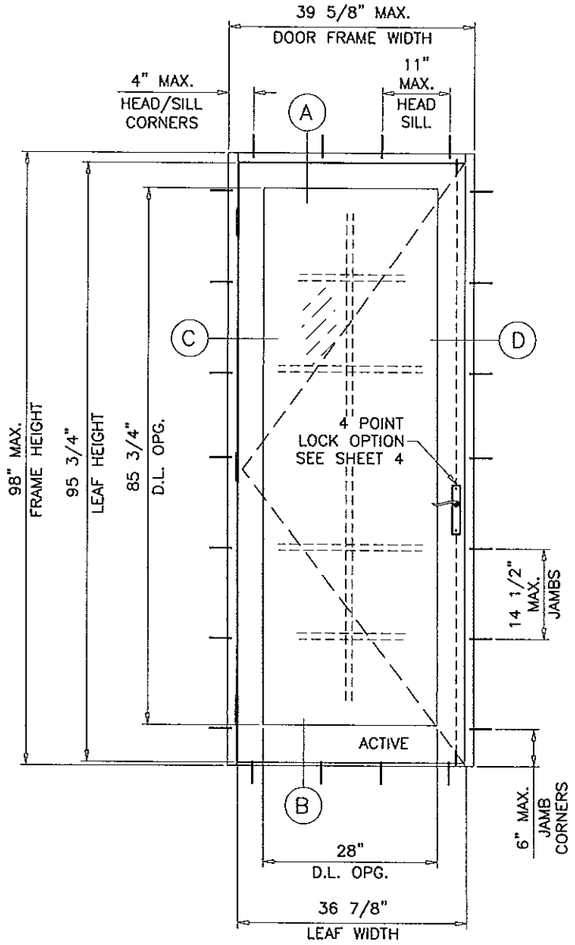


TYPICAL ELEVATION

( X )

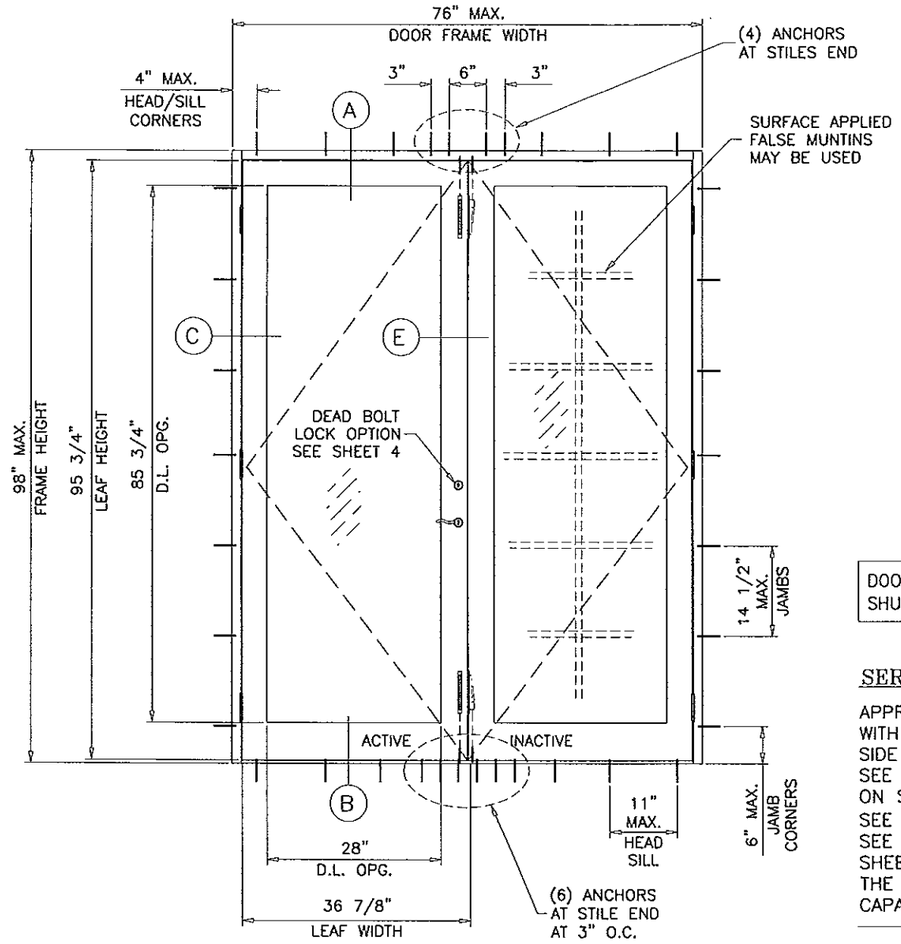


TYPICAL ELEVATION

( XX )

## DOOR OPTIONS

TABLE 1

| DOORS LOAD CAPACITY - PSF SINGLE DOORS (X) | | | | |
|---|---|---|---|---|
| DOOR DIMS. | | | LAMINATED GLASS | |
| FRAME WIDTH | LEAF WIDTH | FRAME HEIGHT | EXT.(+) | INT.(-) |
| 39-5/8" | 36-7/8" | 98" | 65.0 | 80.0 |

TABLE 2

| DOORS LOAD CAPACITY - PSF DOUBLE (XX) | | | | |
|---|---|---|---|---|
| DOOR DIMS. | | | LAMINATED GLASS | |
| FRAME WIDTH | LEAF WIDTH | FRAME HEIGHT | EXT.(+) | INT.(-) |
| 76" | 36-7/8" | 98" | 65.0 | 80.0 |

NOTE:
COMPLIANCE WITH EGRESS REQUIREMENTS TO BE REVIEWED BY BLDG. OFFICIAL PER FBC, AS APPLICABLE.

NOTE:
FLUSH BOLTS AND LOCKS MUST BE ENGAGED TO HEAD AND SILL DURING PERIODS OF HURRICANE WARNING.

NOTE:
GLASS CAPACITIES ON THIS SHEET ARE BASED ON ASTM E1300-04 (3 SEC. GUSTS) AND FLORIDA BUILDING COMMISSION DECLARATORY STATEMENT DCA05-DEC-219

DOOR LEAF HEIGHT = FRAME HEIGHT - 2.250"
DOOR LEAF WIDTH (X DOORS) = FRAME WIDTH - 2.750"
DOOR LEAF WIDTH (XX DOORS) = (FRAME WIDTH - 2.250")/2
D.L.O. HEIGHT = FRAME HEIGHT - 12.250"
D.L.O. WIDTH (X DOORS) = FRAME WIDTH - 11.625"
D.L.O. WIDTH (XX DOORS) = (FRAME WIDTH - 20")/2

Approved as complying with the Florida Building Code
Date JUL 04 2013
NOA# 13-0219.07
Miami Dade Product Control
By

DOORS/SIDELITES ARE RATED FOR LARGE AND SMALL MISSILE IMPACT. SHUTTERS ARE NOT REQUIRED.

## SERIES 100 ALUMINUM FRENCH DOOR W/ SIDELITES

APPROVAL APPLIES TO SINGLE (X) AND DOUBLE (XX) LEAF DOORS WITH OR WITHOUT SIDELITES.
SIDE LITES CAN BE ON ONE OR BOTH SIDES OF DOOR.
SEE TABLES 1 & 2 FOR SINGLE OR DOUBLE LEAF DOORS CAPACITIES ON SHEET 1.
SEE TABLE 3 FOR STATIONARY PANEL (O) CAPACITY ON SHEET 3.
SEE TABLE 4 FOR SIDELITE AND SIDELITE MULLION CAPACITY ON SHEET 4.
THE LOWEST VALUE FROM DOOR CAPACITY TABLES OR MULLION CAPACITY TABLE WILL APPLY TO ENTIRE SYSTEM.

THIS PRODUCT HAS BEEN DESIGNED AND TESTED TO COMPLY WITH THE REQUIREMENTS OF THE CURRENT FLORIDA BUILDING CODE INCLUDING HIGH VELOCITY HURRICANE ZONE (HVHZ).

1BY OR 2BY WOOD BUCKS BY OTHERS, MUST BE ANCHORED PROPERLY TO TRANSFER LOADS TO THE STRUCTURE.

ANCHORS SHALL BE AS LISTED, SPACED AS SHOWN ON DETAILS, ANCHORS EMBEDMENT TO BASE MATERIAL SHALL BE BEYOND WALL DRESSING OR STUCCO.

ANCHORING OR LOADING CONDITIONS NOT SHOWN IN THESE DETAILS ARE NOT PART OF THIS APPROVAL.

A LOAD DURATION INCREASE IS USED IN DESIGN OF ANCHORS INTO WOOD ONLY.

MATERIALS INCLUDING BUT NOT LIMITED TO STEEL/METAL SCREWS, THAT COME INTO CONTACT WITH OTHER DISSIMILAR MATERIALS SHALL MEET THE REQUIREMENTS OF CURRENT FLORIDA BLDG. CODE SECTION 2003.8.4.

Engr: JAVAD AHMAD
CIVIL
FLA. PE # 70592
C.A.N. 3538
JUN 25 2013


AL-FAROOQ CORPORATION
ENGINEERS & PRODUCT DEVELOPMENT
1235 S.W. 87 AVE
MIAMI, FLORIDA 33174
TEL. (305) 264-8100 FAX. (305) 262-6978
COMP-ANL\W13-03DAC


SERIES-100 ALUM SWING DOOR W/ SIDELITES (L.M.I.)


DORALUM CORPORATION
7040 N.W. 77 TERRACE
MIAMI, FL. 33166
TEL. (305) 884-3922 FAX (305) 884-1464


revisions:

| no | date | by | description |
|---|---|---|---|
| A | 05.06.13 | | REV. PER RER COMMENTS |

date: 01-30-13
scale: 1/2"=1'-0"
dr. by: TARIQ
chk. by:

drawing no.
W13-03

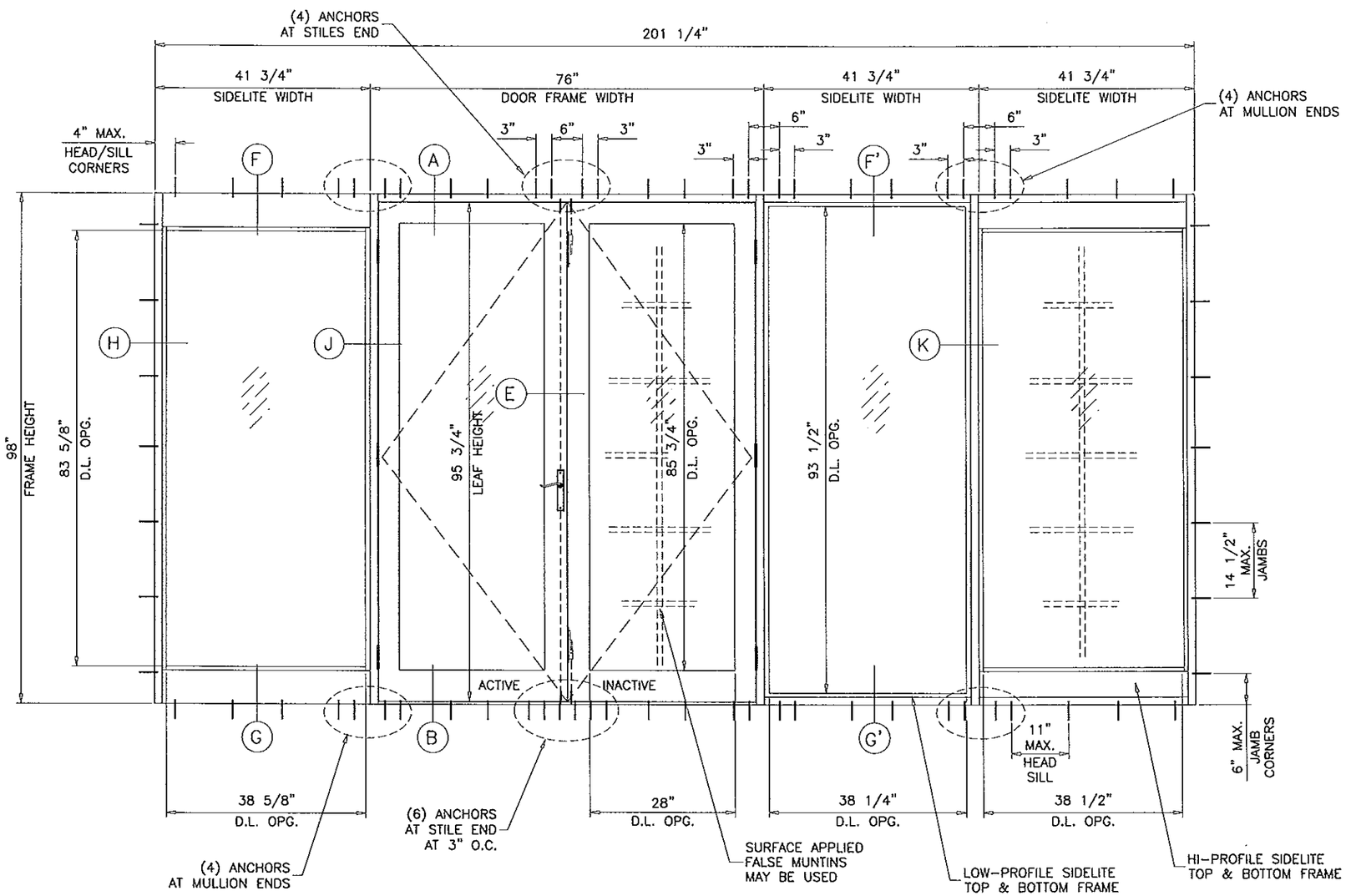


TYPICAL ELEVATION

( OXXOO )

(SEE INSTRUCTIONS IN SHEET 3 TO DETERMINE ENTIRE ASSEMBLY DESIGN LOAD RATING)

SIDELITE OPTIONS

Approved as complying with the Florida Building Code
Date 7/4/13
NOA# 13-0219.07
Miami Dade Product Control
By Ishaq I. Chand

NOTES:
1. DOORS ARE VIEWED FROM OUTSIDE.
2. FRENCH DOORS WITHOUT INSECT SCREENS.

GLASS D.L.O. DIMS.

D.L.O. HEIGHT (HIGH PROFILE SIDELITE) = FRAME HEIGHT – 14.375"
D.L.O. WIDTH (LOW PROFILE SIDELITE) = FRAME WIDTH – 4.50"
D.L.O. WIDTH (SIDELITE) = FRAME WIDTH – 4.875"

D.L.O. HEIGHT (DOOR) = FRAME HEIGHT – 12.250"
D.L.O. WIDTH (X DOORS) = FRAME WIDTH – 11.625"
D.L.O. WIDTH (XX DOORS) = (FRAME WIDTH – 20")/2

Engr: JAVAD AHMAD
CIVIL
FLA. PE # 70592
C.A.N. 3538

JUN 25 2013


AL-FAROOQ CORPORATION
ENGINEERS & PRODUCT DEVELOPMENT
1235 S.W. 87 AVE
MIAMI, FLORIDA 33174
TEL. (305) 264-8100 FAX. (305) 262-6978


COMP-ANL\W13-03DAC

SERIES-100 ALUM SWING DOOR W/ SIDELITES (L.M.I.)


DORALUM CORPORATION
7040 N.W. 77 TERRACE
MIAMI, FL. 33166
TEL. (305) 884-3922 FAX (305) 884-1464


revisions:

| no | date | by | description |
|---|---|---|---|
| A | 05.06.13 | | REV. PER RER COMMENTS |

date: 01-30-13
scale: 1/2"=1'-0"
dr. by: TARIQ
chk. by:

drawing no. W13-03

TABLE 3

| DESIGN LOAD CAPACITY - PSF | | | |
|---|---|---|---|
| FRAME WIDTH INCHES | FRAME HEIGHT INCHES | STATIONARY PANEL (O) EXT.(+) | STATIONARY PANEL (O) INT.(-) |
| 41 3/4 | 82 1/2 | 65.0 | 80.0 |
| 42 | | 64.6 | 79.5 |
| 45 | | 60.3 | 74.2 |
| 48 | | 56.5 | 69.6 |
| 41 3/4 | 84 | 65.0 | 80.0 |
| 42 | | 64.6 | 79.5 |
| 45 | | 60.3 | 74.2 |
| 48 | | 56.5 | 69.6 |
| 41 3/4 | 90 | 65.0 | 80.0 |
| 42 | | 64.6 | 79.5 |
| 45 | | 60.3 | 74.2 |
| 41 3/4 | 96 | 65.0 | 80.0 |
| 42 3/4 | | 64.6 | 79.5 |
| 41 3/4 | 98 | 65.0 | 80.0 |
| 42 3/4 | | 63.5 | 78.1 |

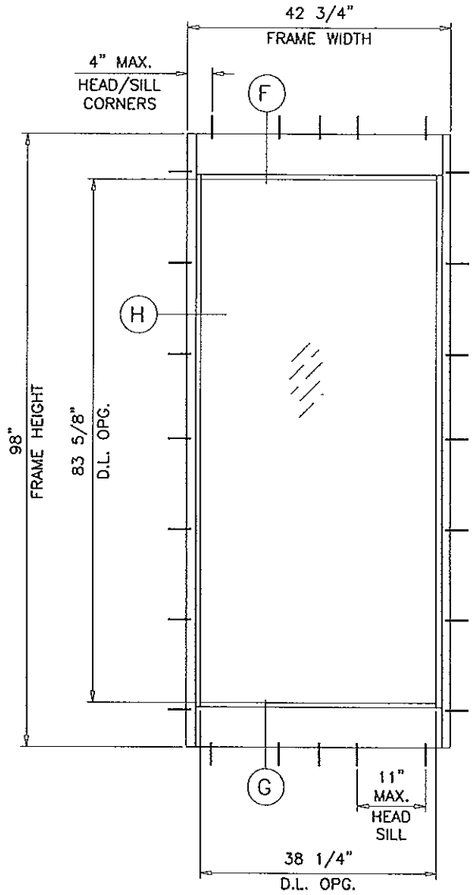


HIGH PROFILE SIDELITE

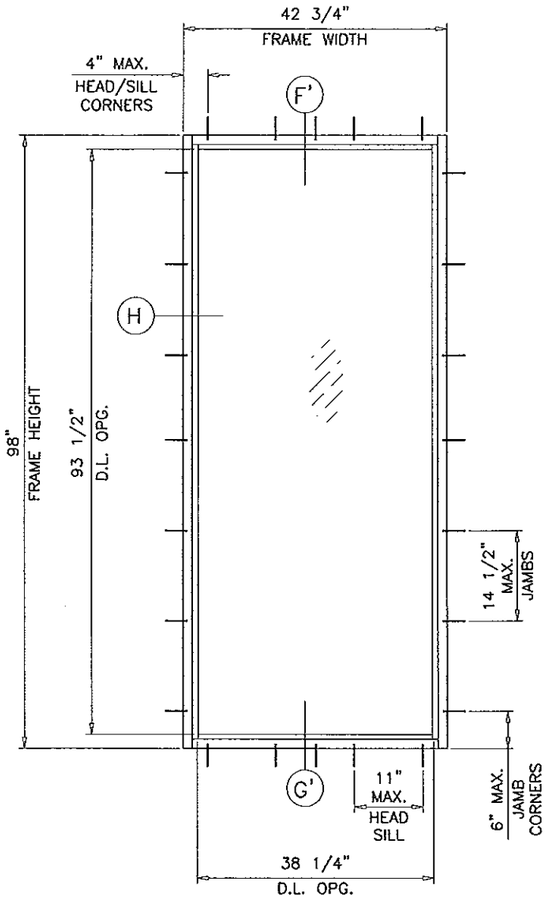


LOW PROFILE SIDELITE

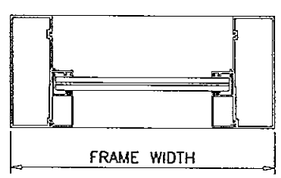


TYPICAL ELEVATIONS

( O )

Approved as complying with the Florida Building Code
Date 7/9/13
NOA# 13-0219.07
Miami Dade Product Control
By

NOTE:
GLASS CAPACITIES ON THIS SHEET ARE BASED ON ASTM E1300-04 (3 SEC. GUSTS).

Engr: JAVAD AHMAD
CIVIL
FLA. PE # 70592
C.A.N. 3538

JUN 25 2013


AL-FAROOQ CORPORATION
ENGINEERS & PRODUCT DEVELOPMENT
1235 S.W. 87 AVE
MIAMI, FLORIDA 33174
TEL. (305) 264-8100 FAX. (305) 262-6978
COMP-ANL\W13-03DAC


SERIES-100 ALUM SWING DOOR W/ SIDELITES (L.M.I.)

DORALUM CORPORATION
7040 N.W. 77 TERRACE
MIAMI, FL. 33166
TEL. (305) 884-3922 FAX (305) 884-1464

revisions:

| no | date | by | description |
|---|---|---|---|
| A | 05.06.13 | | REV. PER RER COMMENTS |

date: 01-30-13
scale: -
dr. by: TARIQ
chk. by:

drawing no.
W13-03

TABLE 4

| MULLION/SIDELITE DESIGN LOAD CAPACITY - PSF | | | | | | | | | | |
|---|---|---|---|---|---|---|---|---|---|---|
| SIDELITE FRAME HEIGHT INCHES | DOOR FRAME WIDTH INCHES | SIDELITE WIDTH INCHES | SIDELITE TO SIDELITE | | | | SIDELITE TO DOOR | | | |
| | | | W/O REINF. | | WITH REINF. | | W/O REINF. | | WITH REINF. | |
| | | | EXT.(+) | INT.(−) | EXT.(+) | INT.(−) | EXT.(+) | INT.(−) | EXT.(+) | INT.(−) |
| 82 1/2 | 39 5/8" (X) 76" (XX) | 24 | 65.0 | 80.0 | 65.0 | 80.0 | 65.0 | 80.0 | 65.0 | 80.0 |
| | | 30 | 65.0 | 80.0 | 65.0 | 80.0 | 65.0 | 80.0 | 65.0 | 80.0 |
| | | 36 | 65.0 | 80.0 | 65.0 | 80.0 | 65.0 | 80.0 | 65.0 | 80.0 |
| | | 41-3/4 | 65.0 | 80.0 | 65.0 | 80.0 | 65.0 | 80.0 | 65.0 | 80.0 |
| | | 42 | 64.6 | 79.5 | 64.6 | 79.5 | 64.6 | 79.5 | 64.6 | 79.5 |
| | | 45 | 60.3 | 74.2 | 60.3 | 74.2 | 60.3 | 74.2 | 60.3 | 74.2 |
| | | 48 | 56.5 | 69.6 | 56.5 | 69.6 | 56.5 | 69.6 | 56.5 | 69.6 |
| 84 | 39 5/8" (X) 76" (XX) | 24 | 65.0 | 80.0 | 65.0 | 80.0 | 65.0 | 80.0 | 65.0 | 80.0 |
| | | 30 | 65.0 | 80.0 | 65.0 | 80.0 | 65.0 | 80.0 | 65.0 | 80.0 |
| | | 36 | 65.0 | 80.0 | 65.0 | 80.0 | 65.0 | 80.0 | 65.0 | 80.0 |
| | | 41-3/4 | 65.0 | 80.0 | 65.0 | 80.0 | 65.0 | 80.0 | 65.0 | 80.0 |
| | | 42 | 64.6 | 79.5 | 64.6 | 79.5 | 64.6 | 79.5 | 64.6 | 79.5 |
| | | 45 | 60.3 | 74.2 | 60.3 | 74.2 | 60.3 | 74.2 | 60.3 | 74.2 |
| | | 48 | 56.5 | 69.6 | 56.5 | 69.6 | 56.5 | 69.6 | 56.5 | 69.6 |
| 90 | 39 5/8" (X) 76" (XX) | 24 | 65.0 | 80.0 | 65.0 | 80.0 | 65.0 | 80.0 | 65.0 | 80.0 |
| | | 30 | 65.0 | 80.0 | 65.0 | 80.0 | 65.0 | 80.0 | 65.0 | 80.0 |
| | | 36 | 65.0 | 78.1 | 65.0 | 80.0 | 65.0 | 80.0 | 65.0 | 80.0 |
| | | 41-3/4 | 65.0 | 69.0 | 65.0 | 80.0 | 65.0 | 79.5 | 65.0 | 80.0 |
| | | 42 | 64.6 | 68.6 | 64.6 | 79.5 | 64.6 | 78.6 | 64.6 | 79.5 |
| | | 45 | 60.3 | 64.9 | 60.3 | 74.2 | 60.3 | 74.2 | 60.3 | 74.2 |
| 96 | 39 5/8" (X) 76" (XX) | 24 | 65.0 | 80.0 | 65.0 | 80.0 | 65.0 | 80.0 | 65.0 | 80.0 |
| | | 30 | 65.0 | 75.3 | 65.0 | 80.0 | 65.0 | 74.0 | 65.0 | 80.0 |
| | | 36 | 63.8 | 63.8 | 65.0 | 80.0 | 65.0 | 68.8 | 65.0 | 80.0 |
| | | 41-3/4 | 56.2 | 56.2 | 65.0 | 79.7 | 65.0 | 64.7 | 65.0 | 80.0 |
| | | 42 | 55.9 | 55.9 | 64.6 | 79.3 | 64.6 | 64.5 | 64.6 | 79.5 |
| 98 | 39 5/8" (X) 76" (XX) | 24 | 65.0 | 80.0 | 65.0 | 80.0 | 65.0 | 75.5 | 65.0 | 80.0 |
| | | 30 | 65.0 | 70.6 | 65.0 | 80.0 | 65.0 | 69.5 | 65.0 | 80.0 |
| | | 36 | 59.9 | 59.9 | 65.0 | 80.0 | 64.6 | 64.6 | 65.0 | 80.0 |
| | | 41-3/4 | 52.6 | 52.6 | 65.0 | 74.7 | 60.7 | 60.7 | 65.0 | 80.0 |

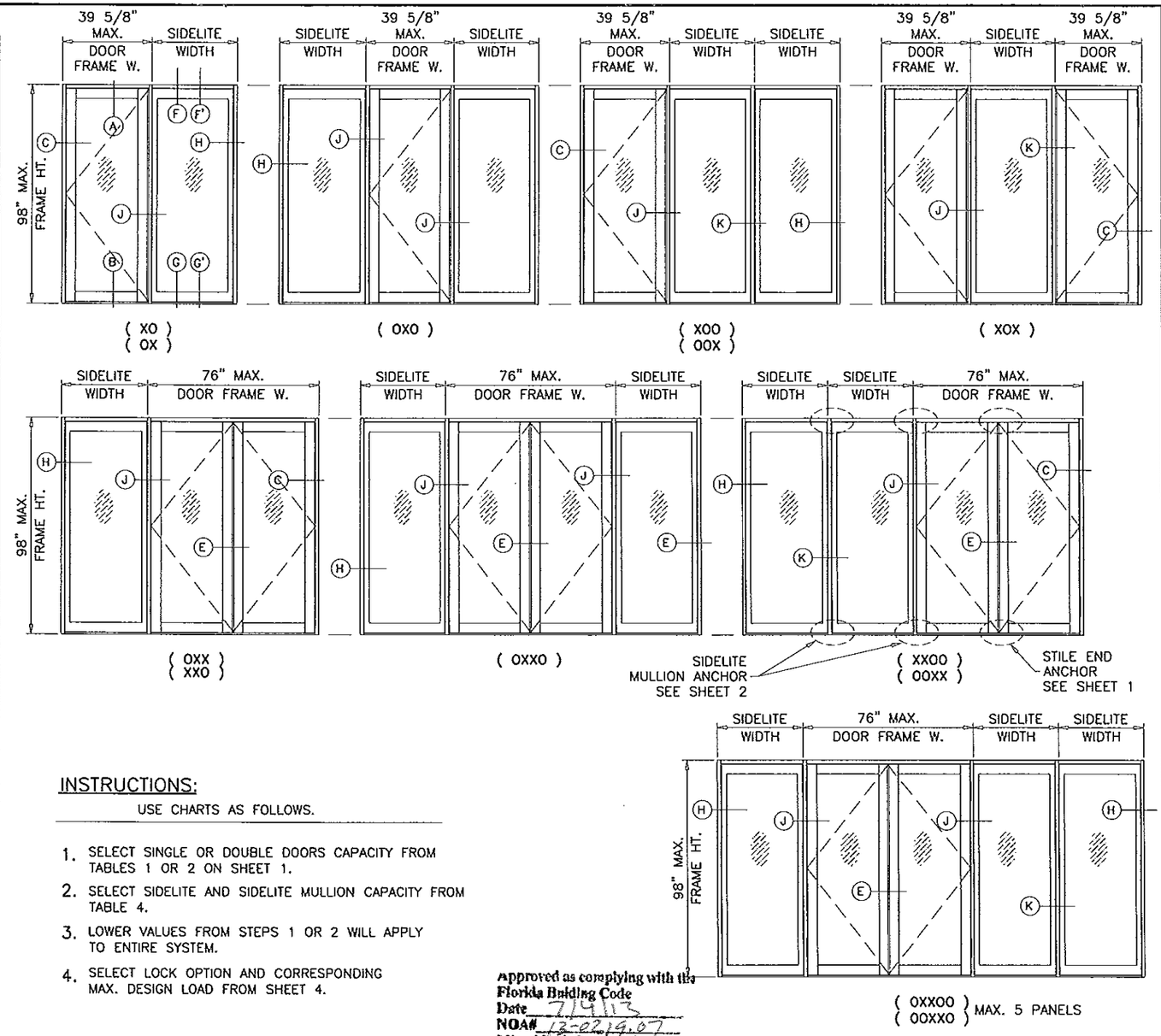


## INSTRUCTIONS:

USE CHARTS AS FOLLOWS.

1. SELECT SINGLE OR DOUBLE DOORS CAPACITY FROM TABLES 1 OR 2 ON SHEET 1.
2. SELECT SIDELITE AND SIDELITE MULLION CAPACITY FROM TABLE 4.
3. LOWER VALUES FROM STEPS 1 OR 2 WILL APPLY TO ENTIRE SYSTEM.
4. SELECT LOCK OPTION AND CORRESPONDING MAX. DESIGN LOAD FROM SHEET 4.

Approved as complying with the Florida Building Code
Date 7/19/13
NOA# 13-0219.07
Miami Dade Product Control
By Shug I. Chaudhry

NOTE:
GLASS CAPACITIES ON THIS SHEET ARE BASED ON ASTM E1300-04 (3 SEC. GUSTS) AND FLORIDA BUILDING COMMISSION DECLARATORY STATEMENT DCA05-DEC-219

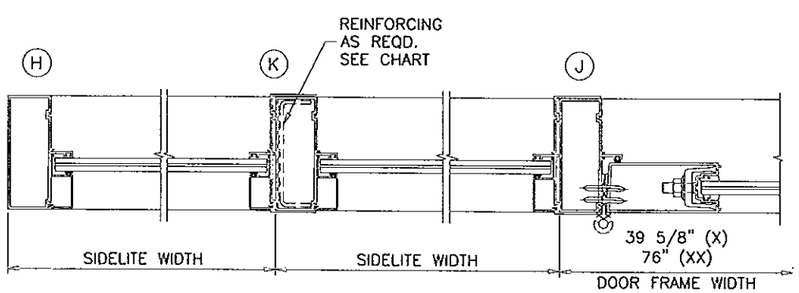


SIDELITE TO SIDELITE WITH DOORS

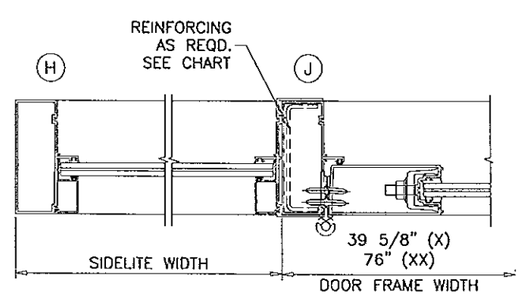


SIDELITE TO DOOR

Engr: JAVAD AHMAD
CIVIL
FLA. PE # 70592
C.A.N. 3538

JUN 25 2013


AL-FAROOQ CORPORATION
ENGINEERS & PRODUCT DEVELOPMENT
1235 S.W. 87 AVE
MIAMI, FLORIDA 33174
TEL. (305) 264-5100 FAX. (305) 262-6978


COMP-ANL\W13-03DAC

SERIES-100 ALUM SWING DOOR W/ SIDELITES (L.M.I.)

DORALUM CORPORATION
7040 N.W. 77 TERRACE
MIAMI, FL. 33166
TEL. (305) 884-3922 FAX (305) 884-1464

revisions:

| no | date | by | description |
|---|---|---|---|
| A | 05.06.13 | RER | REV. PER COMMENTS |

date: 01-30-13
scale: 1
dr. by: TARIQ
chk. by:

drawing no. W13-03

sheet 3.1 of 10

## LOCK OPTIONS:

### ACTIVE LEAF:

SURFACE MOUNT DEAD BOLT LOCK
AT 44-3/4" FROM BOTTOM, KEY OPERATED ON
EXTERIOR AND THUMB TURN ON INTERIOR
FASTENED TO ACTIVE LEAF LOCK STILE WITH
(2) #10-32 X 2" OH MS
(2) #8-32 X 1/2" FH MS
LEVER TYPE METALLIC HANDLE AT 38-3/4" FROM
BOTTOM, FASTENED TO ACTIVE LEAF LOCK STILE
WITH (2) #8-32 X 1-1/4" PH MS.
AND (2) #8-32 X 1/2" FH MS

CONCEALED FLUSH BOLTS BY 'REGENT'
MANUALLY OPERATED LEVERS MOUNTED ON STILE FACE,
LOCATED AT 11-1/2" AND 87-1/2" FROM BOTTOM
FASTENED TO LOCK STILE WITH
#8-32 X 1/2" FH MS (2) SCREWS PER BOLT

### INACTIVE LEAF

CONCEALED FLUSH BOLTS BY 'REGENT'
MANUALLY OPERATED LEVERS MOUNTED ON
INSIDE FACE OF LEAF STILE LOCATED AT
11-1/2" AND 87-1/2" FROM BOTTOM
FASTENED TO LOCK STILE WITH
#8-32 X 1/2" FH MS (2) PER BOLT

### ACTIVE LEAF:

4 POINT LOCK SYSTEM BY 'INTERLOCK' AT 38-3/4"
FROM BOTTOM
HANDLE ACTIVATES DEAD BOLT AND SHOOT BOLTS
ENGAGING AT HEAD AND SILL
KEY OPERATED ON EXTERIOR AND THUMB TURN ON
INTERIOR
HANDLE FASTENED TO LOCK STILE WITH
(2) #8-32 X 2" OH MS
CENTER LOCK FASTENED TO LOCK STILE WITH
(2) #12-24 X 1/4" FH MS

### INACTIVE LEAF:

CONCEALED FLUSH BOLTS BY 'REGENT'
MANUALLY OPERATED LEVERS MOUNTED ON
INSIDE FACE OF STILE LOCATED AT
11-1/2" AND 87-1/2" FROM BOTTOM
FASTENED TO LOCK STILE WITH
#8-32 X 1/2" FH TC MS (2) SCREWS PER BOLT

## HINGES:

3-1/2" X 7-5/8" X .122" THK. EXTRUDED ALUM HINGE
PART #FD-107 BY SULLIVAN & ASSOC.
3 HINGES PER LEAF
AT 9" FROM TOP AND BOTTOM AND AT MIDSPAN
(SPACING NOT TO EXCEED 40" O.C.)
HINGES FASTENED WITH #10 X 1" FH SMS
(5) SCREWS AT HINGE STILE
(6) SCREWS AT FRAME JAMB

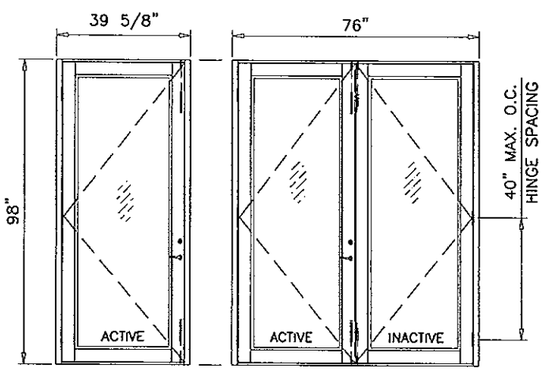


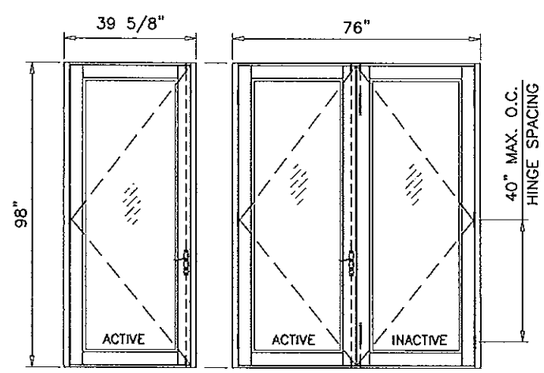


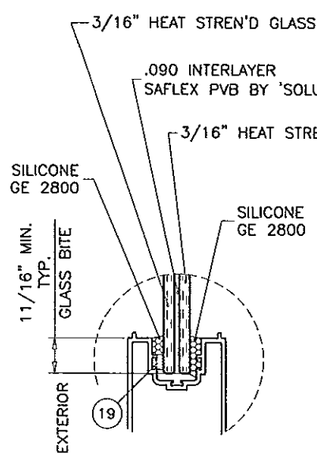


GLASS TYPE 'G1'

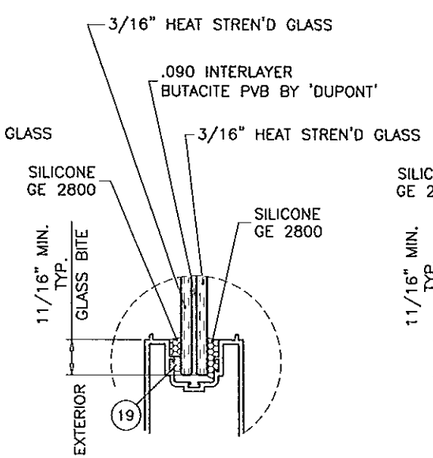


GLASS TYPE 'G2'

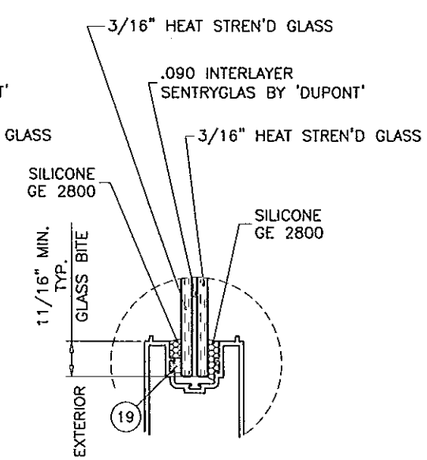


GLASS TYPE 'G3'

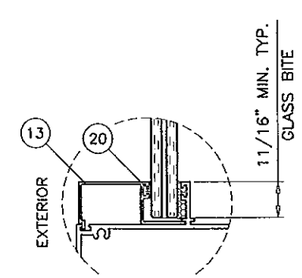


GLAZING DETAIL AT SIDELITE

GLAZING OPTIONS

Approved as complying with the Florida Building Code
Date 7/4/13
NOA# 13-0214.07
Miami Dade Product Control
By

Engr: JAVAD AHMAD
CIVIL
FLA. PE # 70592
C.A.N. 3538

JUN 25 2013


AL-FAROOQ CORPORATION
ENGINEERS & PRODUCT DEVELOPMENT
1235 S.W. 87 AVE
MIAMI, FLORIDA 33174
TEL. (305) 264-8100 FAX. (305) 262-6978
COMP-ANL\W13-03DAC


SERIES-100 ALUM SWING DOOR W/ SIDELITES (L.M.I.)

DORALUM CORPORATION
7040 N.W. 77 TERRACE
MIAMI, FL. 33166
TEL. (305) 884-3922 FAX (305) 884-1464

revisions:

| no | date | by | description |
|---|---|---|---|
| A | 05.06.13 | | REV. PER RER COMMENTS |

date: 01-30-13
scale: -
dr. by: TARIQ
chk. by:

drawing no.
W13-03

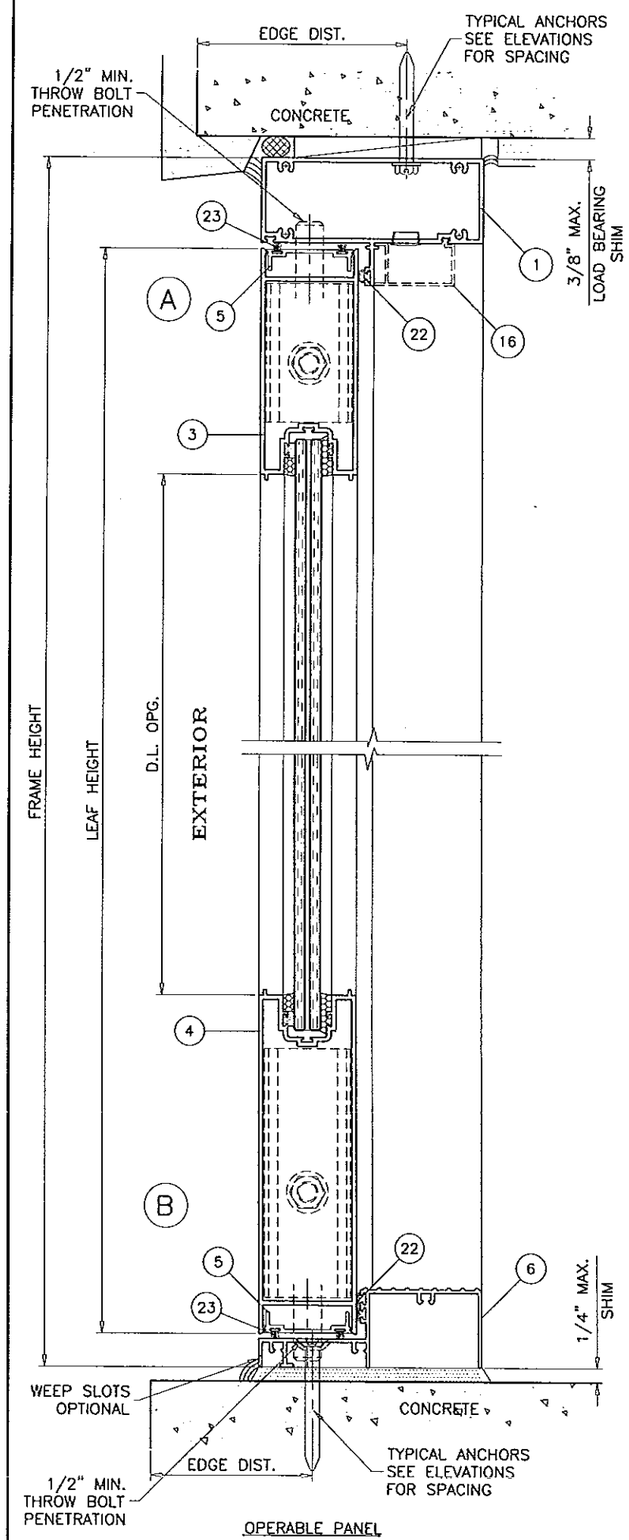


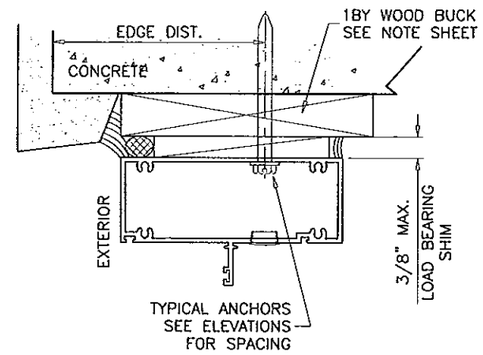


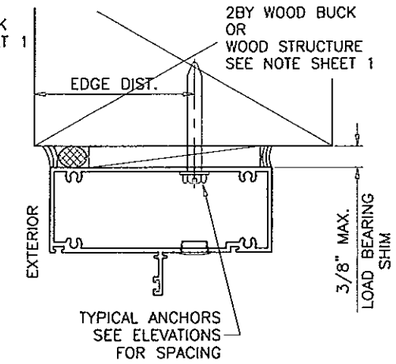


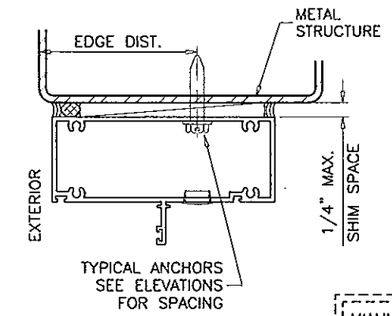


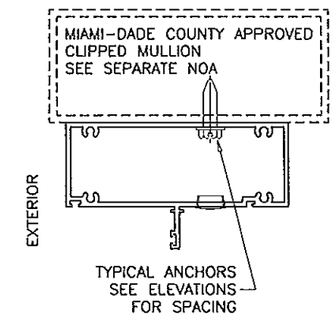


WOOD BUCKS AND METAL STRUCTURE NOT BY DORALUM MUST SUSTAIN LOADS IMPOSED BY GLAZING SYSTEM AND TRANSFER THEM TO THE BUILDING STRUCTURE.

TYPICAL ANCHORS: SEE ELEV. FOR SPACING

1/4" DIA. ULTRACON BY 'ELCO' (Fu=177 KSI, Fy=155 KSI)
INTO 2BY WOOD BUCKS OR WOOD STRUCTURES
1-1/2" MIN. PENETRATION INTO WOOD (HEAD/JAMBS)

THRU 1BY BUCKS INTO CONC. OR MASONRY
1-3/4" MIN. EMBED INTO CONCRETE (HEAD/SILL)
1-1/4" MIN. EMBED INTO CONC. OR MASONRY (JAMBS)

DIRECTLY INTO CONC. OR MASONRY
1-3/4" MIN. EMBED INTO CONCRETE (HEAD/SILL)
1-1/4" MIN. EMBED INTO CONC. OR MASONRY (JAMBS)

1/4" DIA. TEKS OR SELF DRILLING SCREWS (GRADE 5 CRS)
INTO MIAMI-DADE COUNTY APPROVED MULLIONS (MIN. THK. = 1/8")
INTO METAL STRUCTURES (HEAD/SILL/JAMBS)
STEEL : 1/8" THK. MIN. (Fy = 36 KSI MIN.)
ALUMINUM : 1/8" THK. MIN. (6063-T5 MIN.)
(STEEL IN CONTACT WITH ALUMINUM TO BE PLATED OR PAINTED)

TYPICAL EDGE DISTANCE
INTO CONCRETE AND MASONRY = 2-1/2" MIN.
INTO WOOD STRUCTURE = 1" MIN.
INTO METAL STRUCTURE = 3/4" MIN.

CONCRETE AT HEAD, SILL OR JAMBS f'c = 3000 PSI MIN.
C-90 HOLLOW/FILLED BLOCK AT JAMBS f'm = 2000 PSI MIN.

ANCHORS MAY BE HEX OR FLAT HEAD.

Approved as complying with the Florida Building Code
Date 7/4/13
NOA# 13-02.19.07
Miami Dade Product Control
By Ishaq I. Chaudhry

Engr: JAVAD AHMAD
CIVIL
FLA. PE # 70592
C.A.N. 3538
JUN 25 2013

DOOR DETAILS


AL-FAROOQ CORPORATION
ENGINEERS & PRODUCT DEVELOPMENT
1235 S.W. 87 AVE
MIAMI, FLORIDA 33174
TEL. (305) 264-8100 FAX. (305) 262-6978
COMP-ANL\W13-03DAC


SERIES-100 ALUM SWING DOOR W/ SIDELITES (L.M.I.)

DORALUM CORPORATION
7040 N.W. 77 TERRACE
MIAMI, FL. 33166
TEL. (305) 884-3922 FAX (305) 884-1464

revisions:

| no | date | by | description |
|---|---|---|---|
| A | 05.06.13 | | REV. PER RER COMMENTS |

date: 01-30-13
scale: 3/8" = 1"
dr. by: TARIQ
chk. by:

drawing no. W13-03

sheet 5 of 10

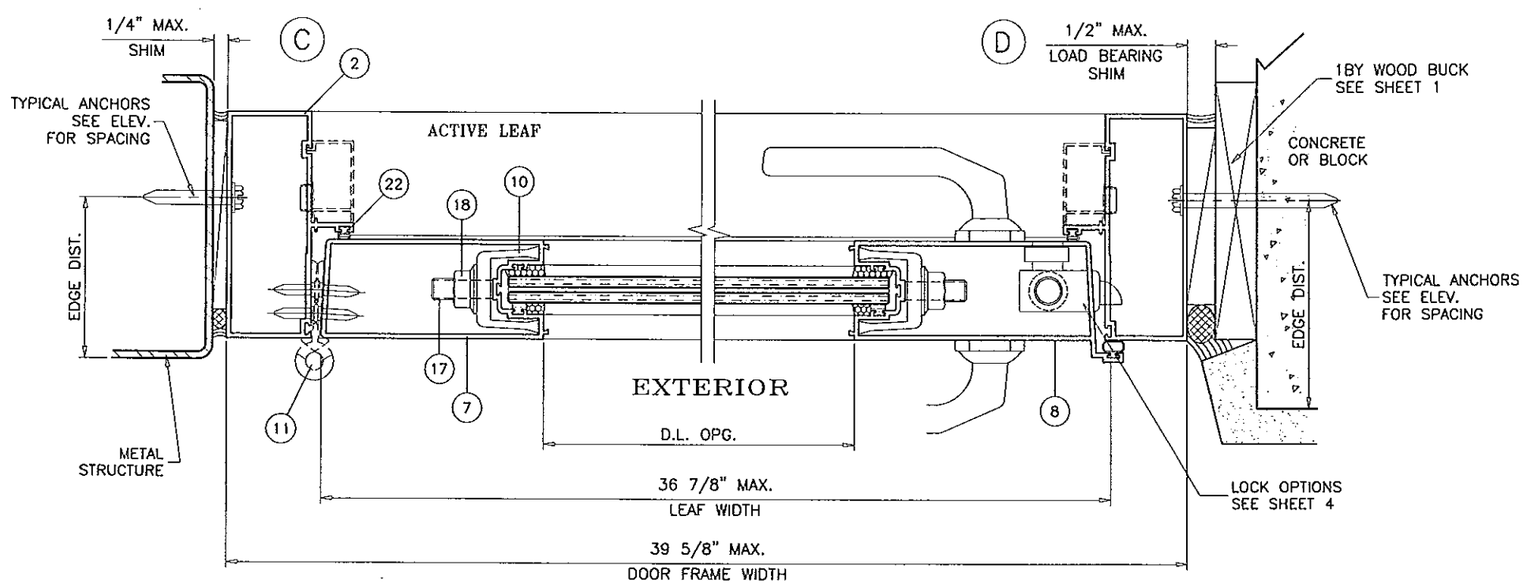


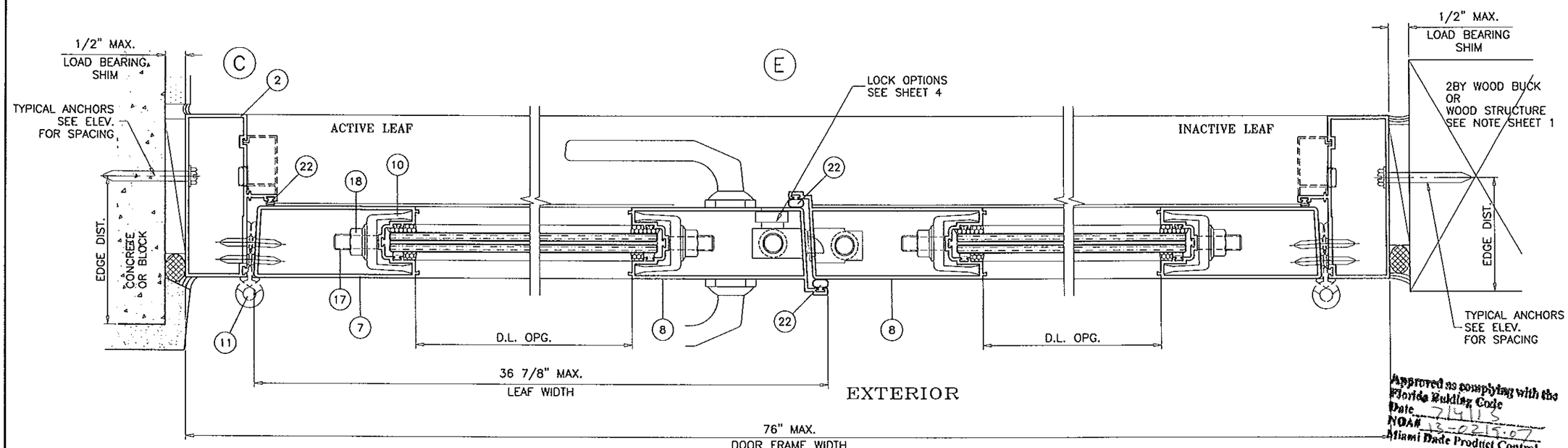


Approved as complying with the Florida Building Code
Date 7/4/13
NOA# 13-0219.07
Miami Dade Product Control
By Ishaq L. Chand

Engr: JAVAD AHMAD
CIVIL
FLA. PE # 70592
C.A.N. 3538

JUN 25 2013

DOOR DETAILS


AL-FAROOQ CORPORATION
ENGINEERS & PRODUCT DEVELOPMENT
1235 S.W. 87 AVE
MIAMI, FLORIDA 33174
TEL. (305) 264-8100 FAX. (305) 262-6978


COMP-ANL\W13-03DAC

SERIES-100 ALUM SWING DOOR W/ SIDELITES (L.M.I.)


DORALUM CORPORATION
7040 N.W. 77 TERRACE
MIAMI, FL. 33166
TEL. (305) 884-3922 FAX (305) 884-1464


revisions:

| no | date | by | description |
|---|---|---|---|
| A | 05.06.13 | | REV. PER RER COMMENTS |

date: 01-30-13
scale: 3/8" = 1"
dr. by: TARIQ
chk. by:

drawing no.
W13-03

sheet 6 of 10

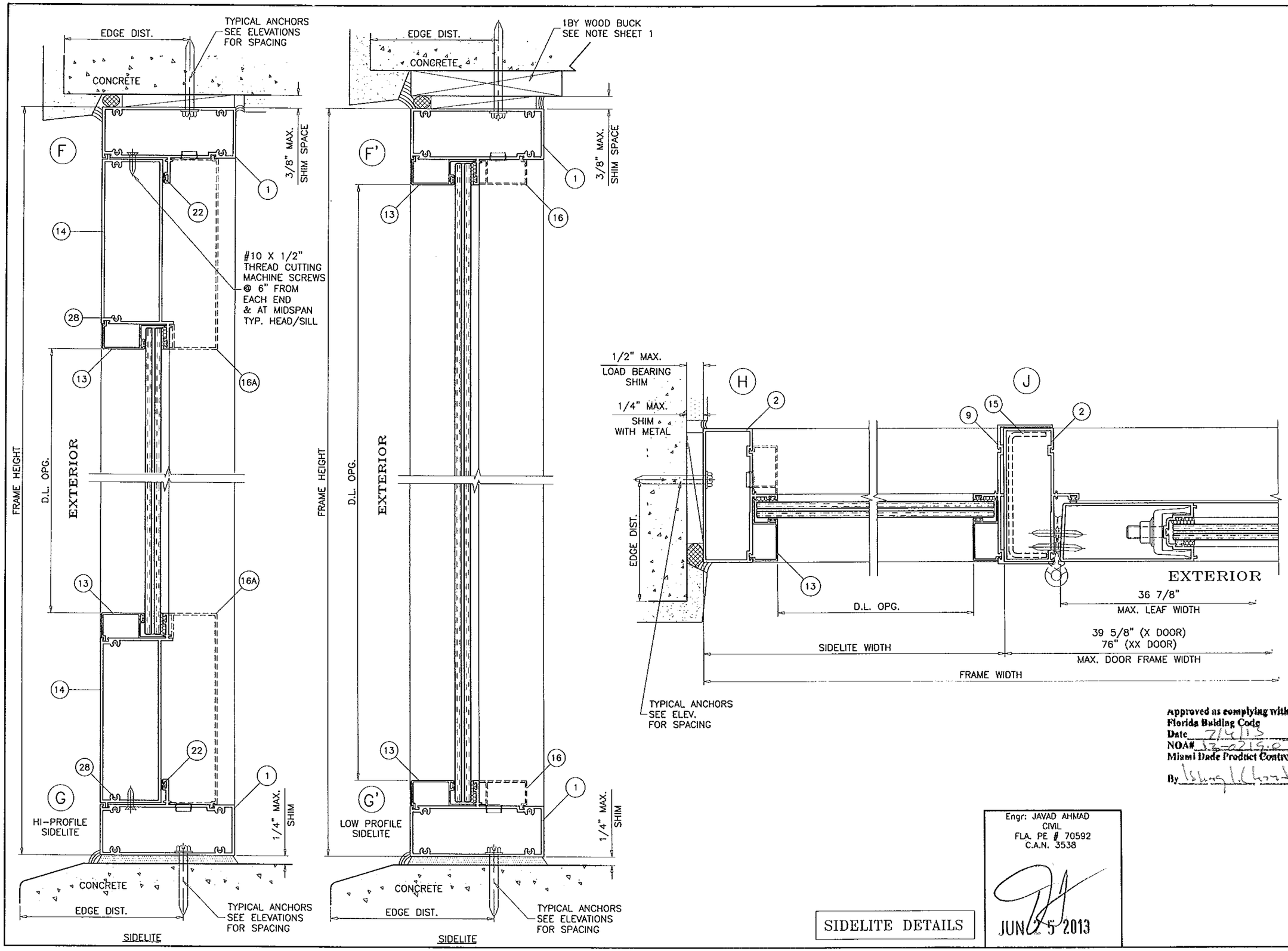


SIDELITE DETAILS

Engr: JAVAD AHMAD
CIVIL
FLA. PE # 70592
C.A.N. 3538

JUN 25 2013

Approved as complying with the Florida Building Code
Date 7/4/13
NOA# 13-0219.07
Miami Dade Product Control
By [signature]


AL-FAROOQ CORPORATION
ENGINEERS & PRODUCT DEVELOPMENT
1235 S.W. 87 AVE
MIAMI, FLORIDA 33174
TEL. (305) 264-8100 FAX. (305) 262-6978
COMP-ANL\W13-03DAC


SERIES-100 ALUM SWING DOOR W/ SIDELITES (L.M.I.)


DORALUM CORPORATION
7040 N.W. 77 TERRACE
MIAMI, FL. 33166
TEL. (305) 884-3922 FAX (305) 884-1464


revisions:

| no | date | by | description |
|---|---|---|---|
| A | 05.06.13 | | REV. PER RER COMMENTS |

date: 01-30-13
scale: 3/8" = 1"
dr. by: TARIQ
chk. by:

drawing no. W13-03

sheet 7 of 10

| ITEM # | PART # | REQD. | DESCRIPTION | MATERIAL | MANF./SUPPLIER/REMARKS |
|---|---|---|---|---|---|
| 1 | T-51493 | 1/DOOR | FRAME HEAD | 6063-T6 | - |
| 2 | T-51494 | 2/DOOR | FRAME JAMB | 6063-T6 | - |
| 3 | T-51503 | 1/LEAF | DOOR TOP RAIL | 6061-T6 | - |
| 4 | T-51492 | 1/LEAF | DOOR BOTTOM RAIL | 6061-T6 | - |
| 5 | T-11502 | 2/ LEAF | WEATHERSTRIP ADAPTER | 6063-T6 | - |
| 6 | SW-28898 | 1/DOOR | THRESHOLD | 6063-T6 | - |
| 7 | T-51520 | 1/LEAF | HINGE STILE | 6063-T6 | - |
| 8 | T-51496 | 1/LEAF | LOCK STILE | 6063-T6 | - |
| 9 | T-11500 | AS REQD. | SIDELITE SLIP ON JAMB | 6063-T6 | - |
| 10 | T-11501 | 1/CORNER | ASSEMBLY STIFFENER | 6063-T6 | - |
| 11 | FD-107 | 3/LEAF | BUTT HINGES (.122" THK.) | ALUMINUM | SULLIVAN & ASSOC. |
| 13 | T-11499 | AS REQD. | SIDELITE GLAZING BEAD | 6063-T6 | - |
| 14 | T-51504 | AS REQD. | SIDELITE BASE ADAPTER | 6063-T5 | - |
| 15 | - | AS REQD. | SIDELITE REINF. CHANNEL | 3003-H14 | - |
| 16 | T-11498 | AS REQD. | SCREW CAP (OPTIONAL) | 6063-T5 | - |
| 16A | - | AS REQD. | SCREW CAP (OPTIONAL) | 6063-T5 | - |
| 17 | - | 2/LEAF | 3/8" X 16 THREADED ROD | STEEL | - |
| 18 | - | 2/LEAF | 3/8" X 16 NUT | - | - |
| 19 | - | AS REQD. | PVC INSERT | - | - |
| 20 | - | AS REQD. | ULTRAFAB | - | - |
| 22 | PW-101 | AS REQD. | BULB WEATHERSTRIPPING | VINYL | - |
| 23 | PB-8400 | AS REQD. | PILE WITH INTEGRAL FIN W'STRIPPING | - | SCHLEGEL |
| 24 | 5025 | AS REQD. | FLUSH BOLTS | | DELTA IND. |
| 25 | CP-B111 | - | ENTRY LOCKSET | | KWIKSET |
| 26 | #8 X 1" | 4/ CORNER | ASSEMBLY SCREWS, FH SELF DRILLING | | AT ALL FRAME JOINTS |
| 27 | #8 X 2-1/2" | 3/ CORNER | ASSEMBLY SCREWS, PH SMS | | - |
| 28 | #8 X 1-1/2" | 2/ CORNER | SIDELITE ASSEMBLY SCREWS, FH SELF DRILLING | | - |

SEALANTS:

FRAME AND LEAF CORNERS, INSTALLATION SCREWS AT SILL AND ALL METAL PARTS CONNECTIONS SEALED WITH CLEAR COLORED SEALANT.

Approved as complying with the Florida Building Code
Date 7/19/13
NOA# 13-0219.07
Miami Dade Product Control
By [illegible]

Engr: JAVAD AHMAD
CIVIL
FLA. PE # 70592
C.A.N. 3538

JUN 25 2013


AL-FAROOQ CORPORATION
ENGINEERS & PRODUCT DEVELOPMENT
1235 S.W. 87 AVE
MIAMI, FLORIDA 33174
TEL. (305) 264-8100 FAX. (305) 262-6978
COMP-ANL\W13-03DAC


SERIES-100 ALUM SWING DOOR W/ SIDELITES (L.M.I.)


DORALUM CORPORATION
7040 N.W. 77 TERRACE
MIAMI, FL. 33166
TEL. (305) 884-3922 FAX (305) 884-1464


revisions:

| no | date | by | description |
|---|---|---|---|
| A | 05.06.13 | | REV. PER RER COMMENTS |

date: 01-30-13
scale: 3/8" = 1"
dr. by: TARIQ
chk. by:

drawing no.
W13-03

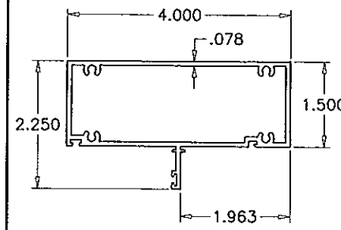


1 FRAME HEAD

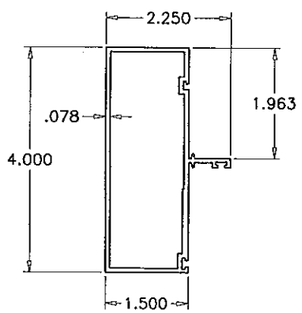


2 FRAME JAMB

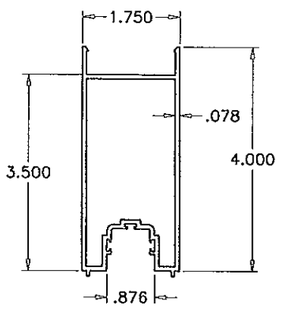


3 TOP RAIL

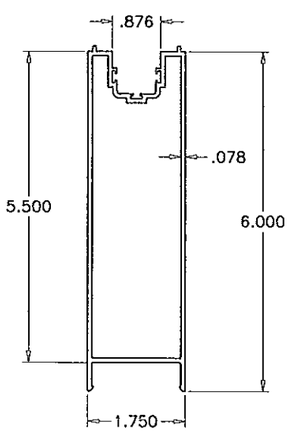


4 BOTTOM RAIL

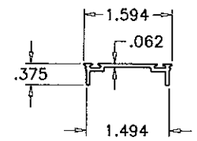


5 WEATHERSTRIP ADAPTER

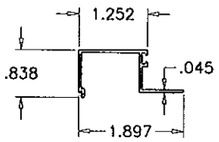


13 SIDE LITE GLAZING BEAD

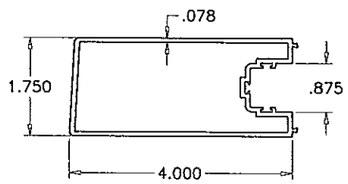


7 HINGE STILE

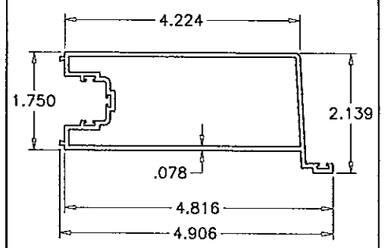


8 LOCK STILE

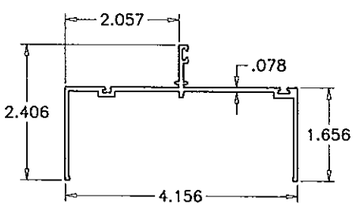


9 SIDE LITE JAMB

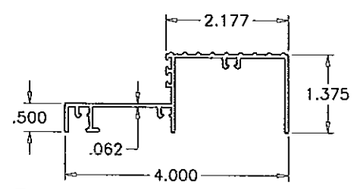


6 THRESHOLD

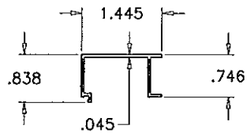


16 SCREW CAP

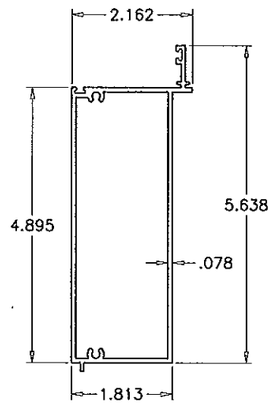


14 SIDELITE BASE ADAPTER

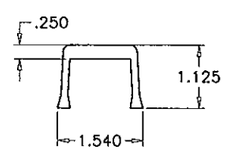


10 ASSEMBLY STIFFENER

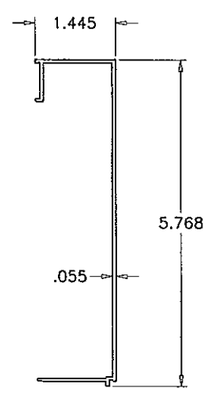


16A SIDELITE BASE GLAZING BEAD

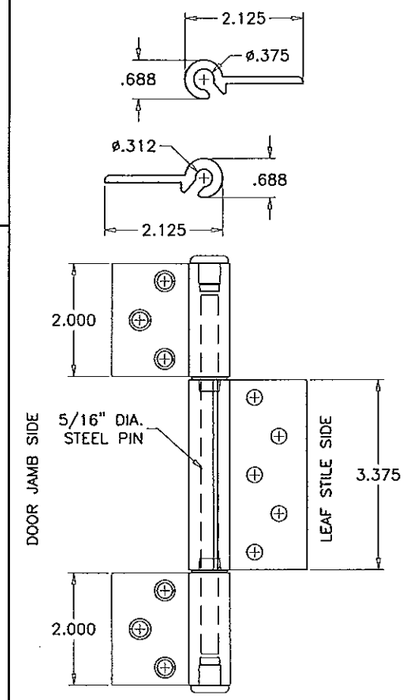


19 ALUMINUM HINGE

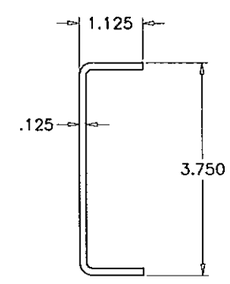


15 SIDELITE ALUM REINF.

Approved as complying with the Florida Building Code
Date 7/4/13
NOA# 13-0214.07
Miami Dade Product Control
By

Engr: JAVAD AHMAD
CIVIL
FLA. PE # 70592
C.A.N. 3538

JUN 25 2013


AL-FAROOQ CORPORATION
ENGINEERS & PRODUCT DEVELOPMENT
1235 S.W. 87 AVE
MIAMI, FLORIDA 33174
TEL. (305) 264-8100 FAX. (305) 262-6978
COMP-ANL\W13-03DAC


SERIES-100 ALUM SWING DOOR W/ SIDELITES (L.M.I.)

DORALUM CORPORATION
7040 N.W. 77 TERRACE
MIAMI, FL. 33166
TEL. (305) 884-3922 FAX (305) 884-1464

revisions:

| no | date | by | description |
|---|---|---|---|
| A | 05.06.13 | | REV. PER RER COMMENTS |

date: 01-30-13
scale: 3/8" = 1"
dr. by: TARIQ
chk. by:

drawing no. W13-03

sheet 9 of 10

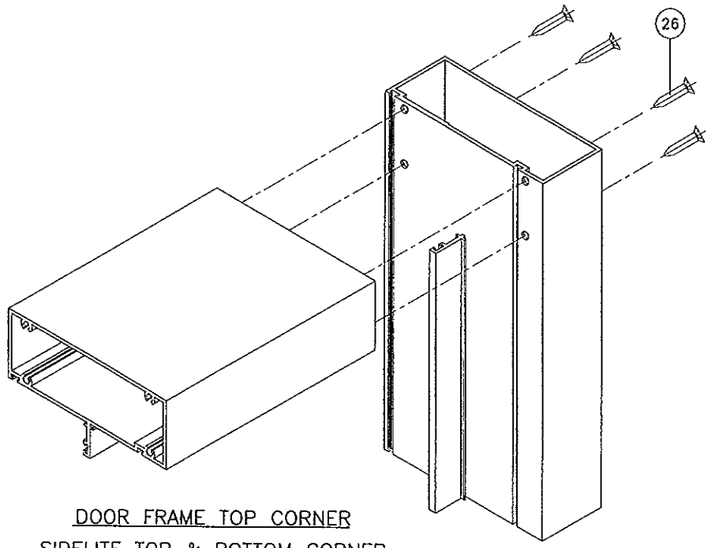


DOOR FRAME TOP CORNER
SIDELITE TOP & BOTTOM CORNER

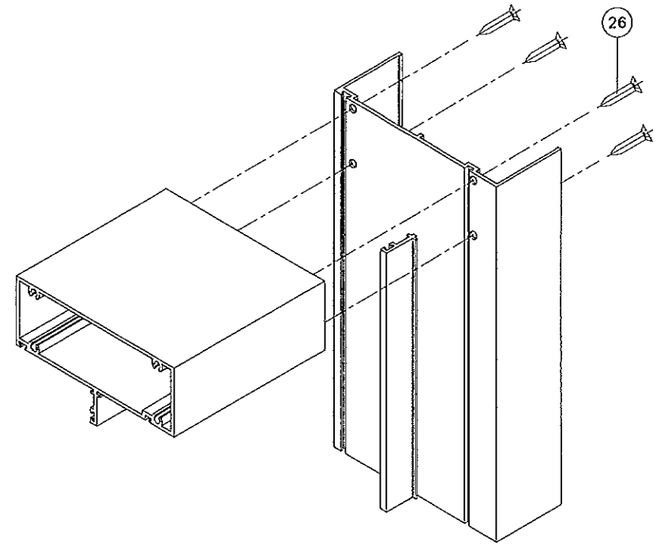


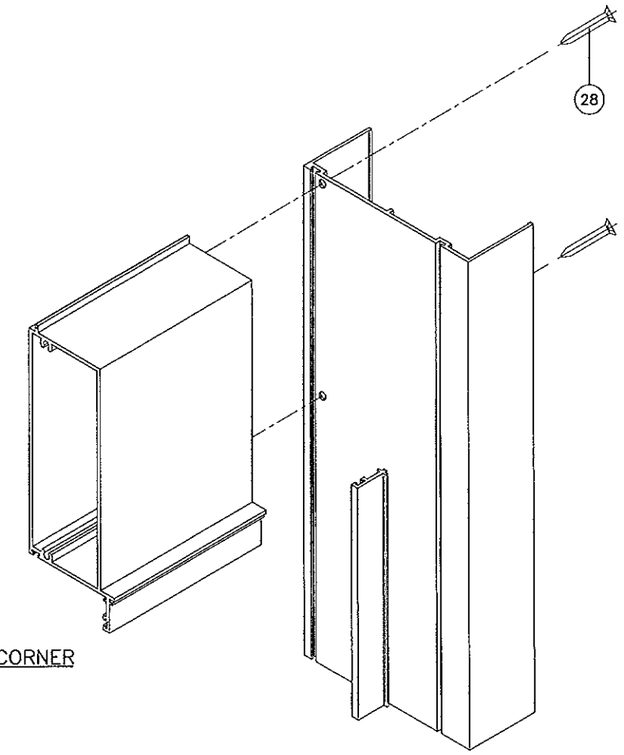


SIDELITE SLIP ON JAMB CORNER

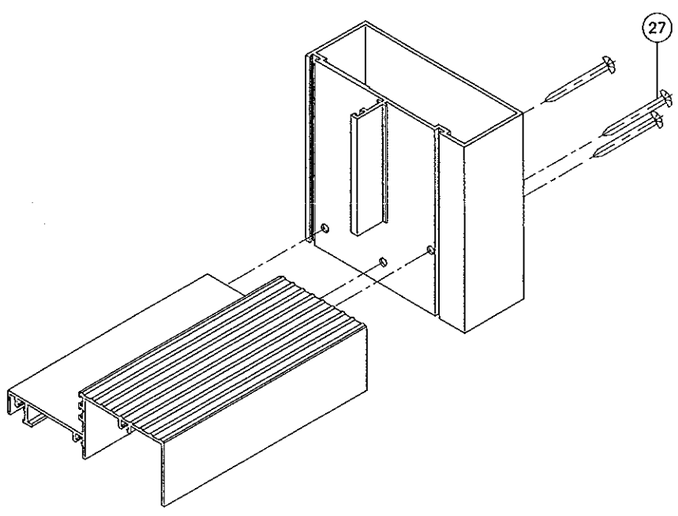


DOOR FRAME BOTTOM CORNER

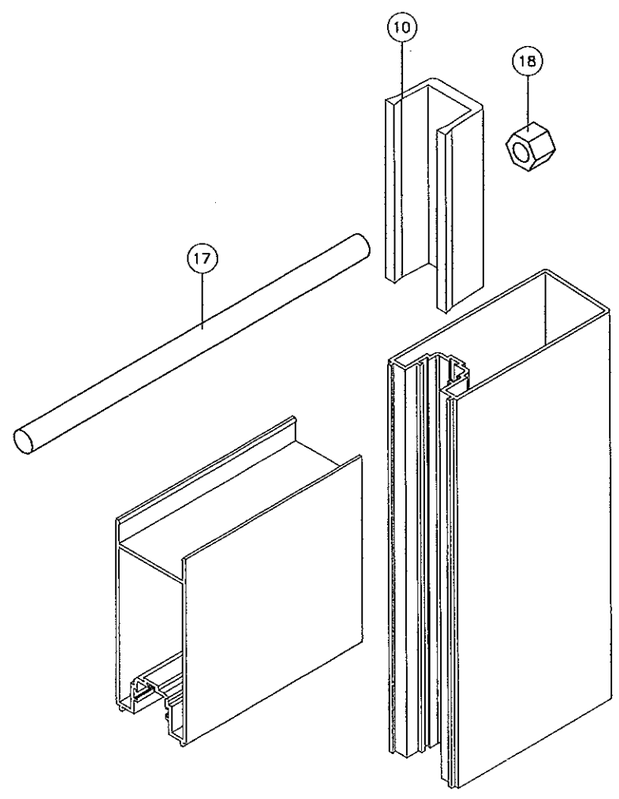


LEAF TOP & BOTTOM CORNER

Approved as complying with the Florida Building Code
Date JULY 04, 2013
NOA# 13-0227.07
Miami Dade Product Control
By

Engr: JAVAD AHMAD
CIVIL
FLA. PE# 70592
C.A.N. 3538

JUN 25 2013

**AL-FAROOQ CORPORATION**
ENGINEERS & PRODUCT DEVELOPMENT
1235 S.W. 87 AVE
MIAMI, FLORIDA 33174
TEL. (305) 264-8100 FAX. (305) 262-6978
COMP-ANL\W13-03DAC

SERIES-100 ALUM SWING DOOR W/ SIDELITES (L.M.I.)

**DORALUM CORPORATION**
7040 N.W. 77 TERRACE
MIAMI, FL. 33166
TEL. (305) 884-3922 FAX (305) 884-1464

revisions:

| no | date | by | description |
|---|---|---|---|
| A | 05.06.13 | | REV. PER RER COMMENTS |

date: 01-30-13
scale: 3/8" = 1"
dr. by: TARIQ
chk. by:

drawing no.
W13-03

sheet 10 of 10