MIAMI-DADE COUNTY
PRODUCT CONTROL SECTION
11805 SW 26 Street, Room 208
Miami, Florida 33175-2474
T (786) 315-2590 F (786) 315-2599
www.miamidade.gov/economy

DEPARTMENT OF REGULATORY AND ECONOMIC RESOURCES (RER)
BOARD AND CODE ADMINISTRATION DIVISION

NOTICE OF ACCEPTANCE (NOA)

CGI Windows & Doors, Inc.
10100 N. W. 25th Street
Miami, Fl. 33172

SCOPE:

This NOA is being issued under the applicable rules and regulations governing the use of construction materials. The documentation submitted has been reviewed and accepted by Miami-Dade County RER -Product Control Section to be used in Miami Dade County and other areas where allowed by the Authority Having Jurisdiction (AHJ).

This NOA shall not be valid after the expiration date stated below. The Miami-Dade County Product Control Section (In Miami Dade County) and/or the AHJ (in areas other than Miami Dade County) reserve the right to have this product or material tested for quality assurance purposes. If this product or material fails to perform in the accepted manner, the manufacturer will incur the expense of such testing and the AHJ may immediately revoke, modify, or suspend the use of such product or material within their jurisdiction. RER reserves the right to revoke this acceptance, if it is determined by Miami-Dade County Product Control Section that this product or material fails to meet the requirements of the applicable building code.

This product is approved as described herein, and has been designed to comply with the Florida Building Code, including the High Velocity Hurricane Zone.

DESCRIPTION: Series "160 Sentinel" Aluminum Outswing glazed Doors w/wo Sidelites - LMI

APPROVAL DOCUMENT: Drawing No.**W13-01 Rev A**, titled "Series 160 Sentinel Outswing Doors", sheets 1 thru 11 of 11, inclusive sheet 9.1, prepared by Al-Farooq Corporation., dated 01-03-13 and last revised on JUL 31, 2013, Signed and sealed by Javad Ahmad, P.E., bearing the Miami-Dade County Product Control Approval stamp with the Notice of Acceptance number and approval date by the Miami-Dade County Product Control Section.

MISSILE IMPACT RATING: Large and Small Missile Impact

Limitations:

1. See Design Pressure ratings single and double doors in sheet **1**, single sidelite in sheet **3** and door mullion in sheet **4**. For mulled unit lower design of door or sidelite or mullion shall apply to the entire assembly.
2. See glazing option in sheet **5** and locking hardware in sheet **9**.

LABELING: Each unit shall bear a permanent label with the manufacturer's name or logo, city, state and series and following statement: "Miami-Dade County Product Control Approved", noted herein.

RENEWAL of this NOA shall be considered after a renewal application has been filed and there has been no change in the applicable building code negatively affecting the performance of this product.

TERMINATION of this NOA will occur after the expiration date or if there has been a revision or change in the materials, use, and/or manufacture of the product or process. Misuse of this NOA as an endorsement of any product, for sales, advertising or any other purposes shall automatically terminate this NOA. Failure to comply with any section of this NOA shall be cause for termination and removal of NOA.

ADVERTISEMENT: The NOA number preceded by the words Miami-Dade County, Florida, and followed by the expiration date may be displayed in advertising literature. If any portion of the NOA is displayed, then it shall be done in its entirety.

INSPECTION: A copy of this entire NOA shall be provided to the user by the manufacturer or its distributors and shall be available for inspection at the job site at the request of the Building Official.

This NOA consists of this page 1 and evidence pages E-1& E-2, as well as approval document mentioned above.

The submitted documentation was reviewed by **Ishaq I. Chanda, P.E.**

MIAMI-DADE COUNTY APPROVED

8/11/13

NOTICE OF ACCEPTANCE: EVIDENCE SUBMITTED

A. DRAWINGS

1. Manufacturer's die drawings and sections
2. Drawing No.**W13-01 Rev A**, titled "Series 160 Sentinel Outswing Doors", sheets 1 thru of 11 of 11, inclusive sheet 9.1, prepared by Al-Farooq Corporation., dated 01-03-13 and last revised on JUL 31, 2013, signed and sealed by Javad Ahmad, P.E.

B. TESTS

1. Test reports on: 1) Air Infiltration Test, per FBC, TAS 202-94
   2) Uniform Static Air Pressure Test, Loading per FBC TAS 202-94
   3) Water Resistance Test, per FBC, TAS 202-94(+50.0 PSF, sill S-I only)
   4) Large Missile Impact Test per FBC, TAS 201-94
   5) Cyclic Wind Pressure Loading per FBC, TAS 203-94
   6) Forced Entry Test, per FBC 2411 3.2.1, TAS 202-94

Along with manufacturer's parts and section drawing marked-up drawings of aluminum out w/ sidelites, by American test Lab of South Florida, Inc., Test Report No. **ATLSF-1218.01-12** dated 02/11/2013, signed and sealed by Henry Hatem, P.E.

C. CALCULATIONS

1. Anchor verification calculations and structural analysis, complying with FBC-2010, prepared by Al Farooq Corporation, dated 02/11/13 and last revised on Jun 04, 2013, signed and sealed by Javad Ahmad, P.E.
3. Glazing complies w/ ASTME-1300-02 & -04.

D. QUALITY ASSURANCE

1. Miami Dade Department of Permitting, Environment, and Regulatory Affairs (PERA).

E. MATERIAL CERTIFICATIONS

1. Notice of Acceptance No. **11-0624.02** issued to E.I. DuPont DeNemours & Co., Inc. for their "**DuPont Sentry Glass ® Interlayer**", expiring on 01/14/17.
2. Notice of Acceptance No. **12-1231.10** issued to Eastman Chemical Company(MA) former Solutia Inc. for "Saflex clear & color glass interlayer", expiring on 05/21/16.
3. Notice of Acceptance No. **12-1231.08** issued to Eastman Chemical Company(MA) former Solutia Inc. for "Saflex CP-Saflex & Saflex HP composite interlayer w/ PET core", expiring on 12/11/18.

F. STATEMENTS

1. Statement letter of conformance to FBC 2010 and letter of no financial interest, prepared by Al Farooq Corporation, dated 02/11/13, signed and sealed by Javad Ahmad, P.E.
2. Lab compliance and addendum letters, as part of the above referenced test reports.

G. OTHER

1. Test proposal # **12-0553**, dated 04/25/12 approved by RER.

Ishaq I. Chanda

Ishaq I. Chanda, P.E.
Product Control Examiner
NOA No 13-0226.06
Expiration Date: August 08, 2018
Approval Date: August 08, 2013

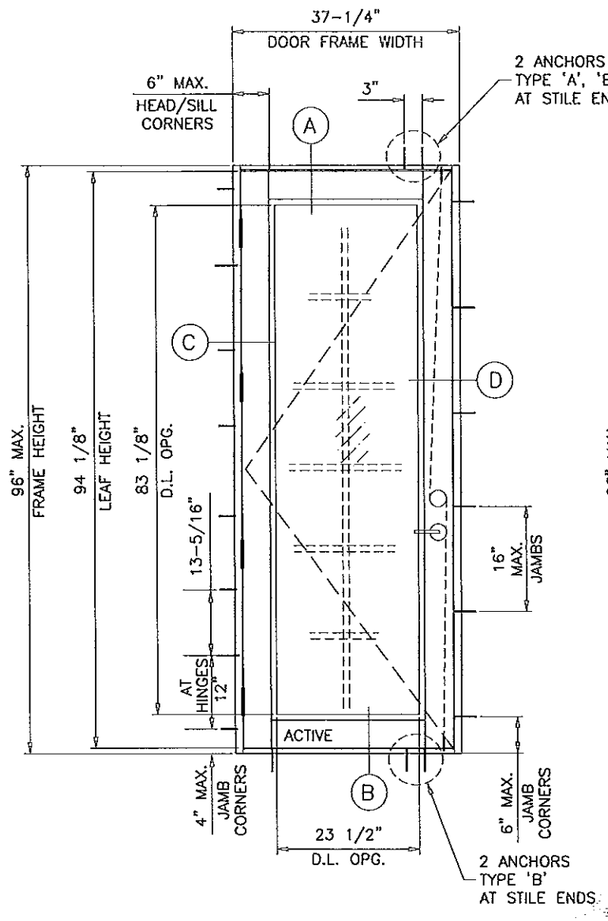

TYPICAL ELEVATION

(X)

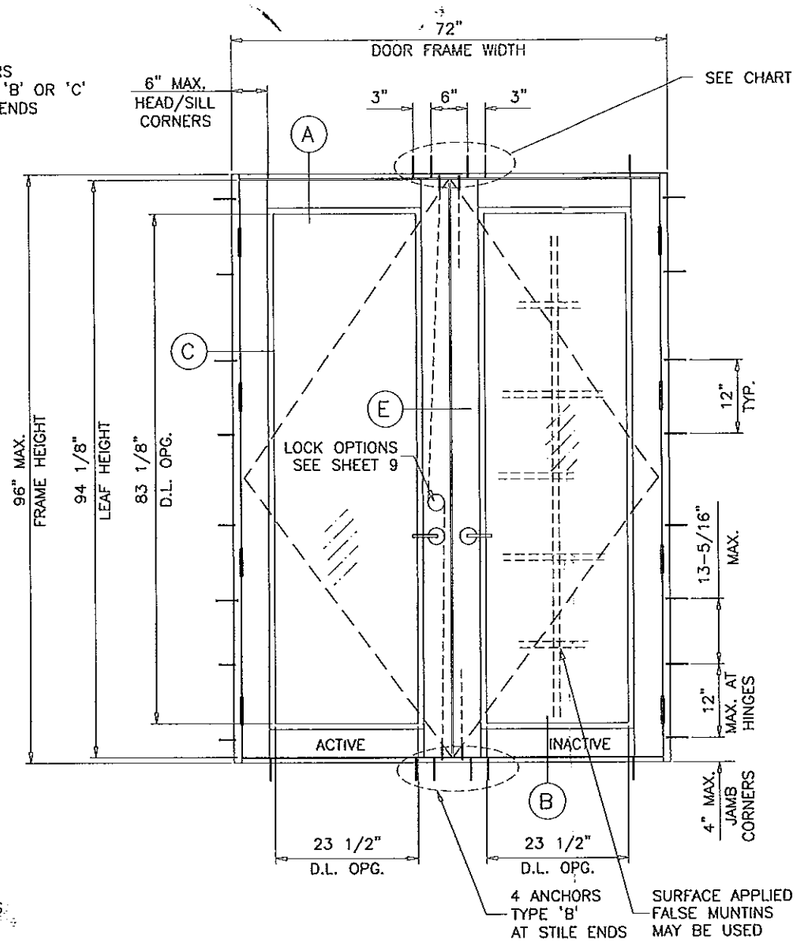

TYPICAL ELEVATION

(XX)

HEAD ANCHORS AT STILE ENDS QUANTITY CHART			
	ANCHOR TYPE		
SHIM	'A'	'B'	'C'
1/4"	4	4	4
3/8"	6	6	6
1/2"	6	6	–

Approved as complying with the
Florida Building Code
Date AUG 08, 2013
NOA 13-0226.06
Miami Dade Product Control
By

SERIES 160 SENTINEL
ALUMINUM OUTSWING DOOR W/ SIDELITES

APPROVAL APPLIES TO SINGLE (X) AND DOUBLE (XX) LEAF DOORS WITH OR WITHOUT SIDELITES.
SIDE LITES CAN BE ON ONE OR BOTH SIDES OF DOOR.
SEE SHEET 1 FOR SINGLE OR DOUBLE DOORS DESIGN LOAD CAPACITIES.
SEE SHEET 3 FOR SINGLE STATIONARY PANEL LOAD CAPACITIES.
SEE SHEET 4 FOR SIDELITE TO DOOR MULLION CAPACITY.
THE LOWEST VALUE FROM DOOR, SIDELITE OR MULLION CAPACITY CHARTS WILL APPLY TO ENTIRE SYSTEM.

THIS PRODUCT HAS BEEN DESIGNED AND TESTED TO COMPLY WITH THE REQUIREMENTS OF THE CURRENT FLORIDA BUILDING CODE INCLUDING HIGH VELOCITY HURRICANE ZONE (HVHZ).

1BY OR 2BY WOOD BUCKS BY OTHERS, MUST BE ANCHORED PROPERLY TO TRANSFER LOADS TO THE STRUCTURE.

ANCHORS SHALL BE AS LISTED, SPACED AS SHOWN ON DETAILS, ANCHORS EMBEDMENT TO BASE MATERIAL SHALL BE BEYOND WALL DRESSING OR STUCCO.

ANCHORING OR LOADING CONDITIONS NOT SHOWN IN THESE DETAILS ARE NOT PART OF THIS APPROVAL.

A LOAD DURATION INCREASE IS USED IN DESIGN OF ANCHORS INTO WOOD ONLY.

MATERIALS INCLUDING BUT NOT LIMITED TO STEEL/METAL SCREWS, THAT COME INTO CONTACT WITH OTHER DISSIMILAR MATERIALS SHALL MEET THE REQUIREMENTS OF CURRENT FLORIDA BLDG. CODE SECTION 2003.8.4.

DOOR OPTIONS

DOORS LOAD CAPACITY – PSF SINGLE DOORS (X)				
DOOR DIMS.			LAM. or INSUL-LAM.	
FRAME WIDTH	LEAF WIDTH	FRAME HEIGHT	EXT.(+)	INT.(–)
37-1/4"	35"	96"	80	80

DOORS LOAD CAPACITY – PSF DOUBLE (XX)				
DOOR DIMS.			LAM. or INSUL-LAM.	
FRAME WIDTH	LEAF WIDTH	FRAME HEIGHT	EXT.(+)	INT.(–)
72"	35"	96"	80	80

NOTE:
VERIFY COMPLIANCE WITH EGRESS LIMITATIONS WHERE REQUIRED.

NOTE:
FLUSH BOLTS AND LOCKS MUST BE ENGAGED TO HEAD AND SILL DURING PERIODS OF HURRICANE WARNING.

DOOR D.L.O. DIMS.

D.L.O. HEIGHT = FRAME HEIGHT – 12.875"
D.L.O. WIDTH (X DOORS) = FRAME WIDTH – 13.75"
D.L.O. WIDTH (XX DOORS) = (FRAME WIDTH – 25)/2

DOORS/SIDELITES ARE RATED FOR LARGE AND SMALL MISSILE IMPACT. SHUTTERS ARE NOT REQUIRED.

NOTE:
GLASS CAPACITIES ON THIS SHEET ARE BASED ON ASTM E1300-04 (3 SEC. GUSTS) AND FLORIDA BUILDING COMMISSION DECLARATORY STATEMENT DCA05-DEC-219

Engr: JAVAD AHMAD
CIVIL
FLA. PE # 70592
C.A.N. 3538
JUL 31 2013

AL-FAROOQ CORPORATION
ENGINEERS & PRODUCT DEVELOPMENT
1235 S.W. 87 AVE
MIAMI, FLORIDA 33174
TEL. (305) 264-8100 FAX. (305) 262-6978
COMP-ANL\W13-01CGI

SERIES 160 SENTINEL ALUM OUTSWING DOOR (L.M.I./S.M.I.)
CGI WINDOWS & DOORS
10100 N.W. 25TH STREET
MIAMI, FL. 33172
TEL. (305) 593-6590 FAX. (305) 593-6592

revisions:

no	date	by	description
A	05.02.13		REV. PER RER COMMENTS

date: 01-03-13
scale: 1/2"=1'-0"
dr. by: HAMID
chk. by:

drawing no.
W13-01

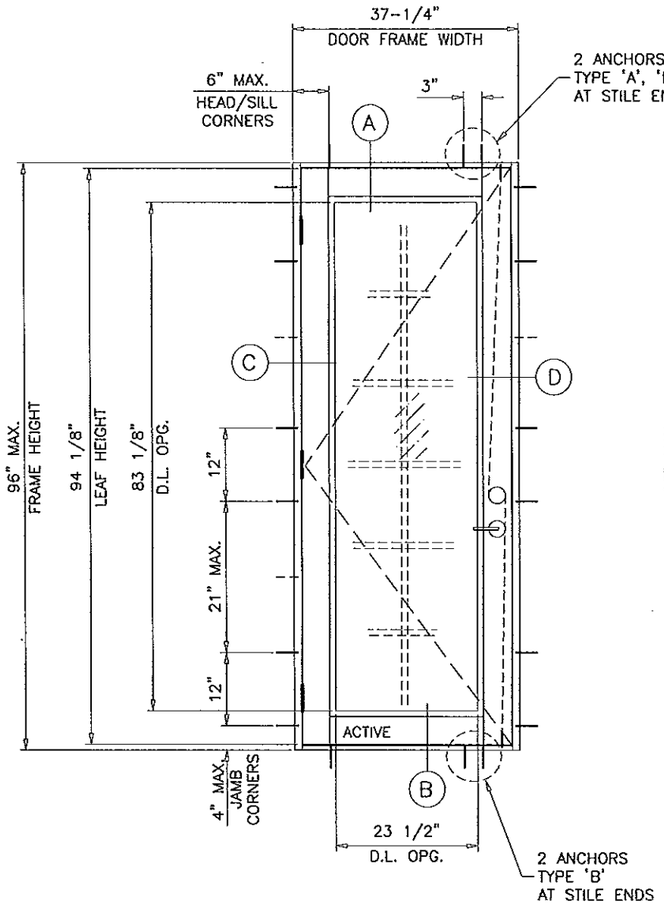

TYPICAL ELEVATION FOR 3 HINGE DOOR

(X)

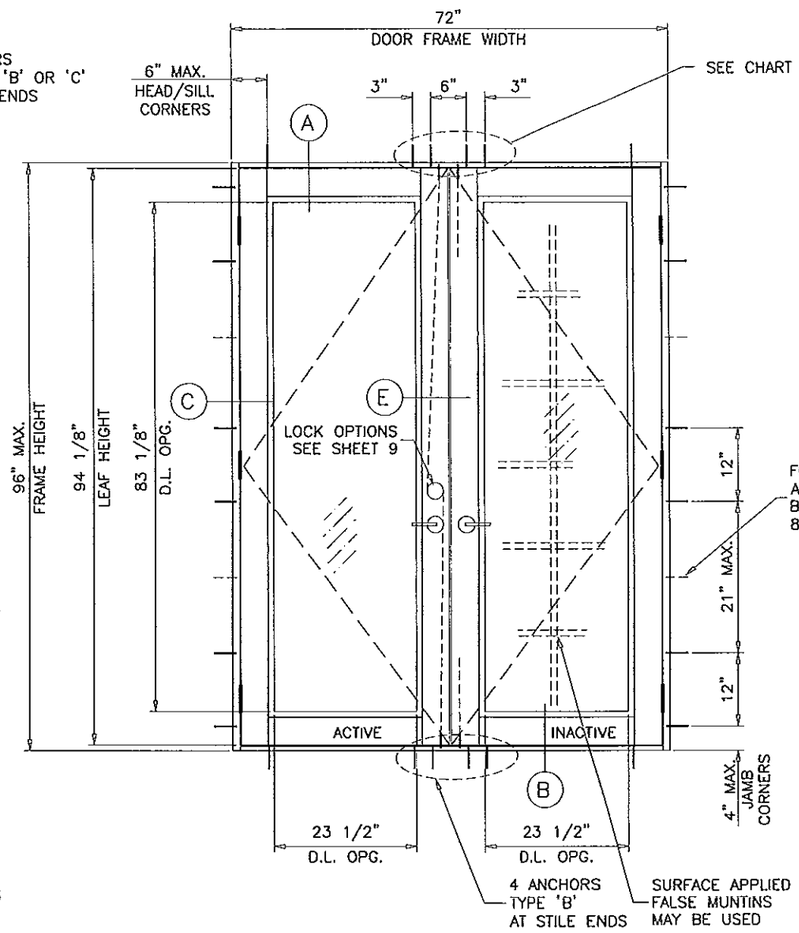

TYPICAL ELEVATION FOR 3 HINGE DOOR

(XX)

HEAD ANCHORS AT STILE ENDS QUANTITY CHART			
	ANCHOR TYPE		
SHIM	'A'	'B'	'C'
1/4"	4	4	4
3/8"	6	6	6
1/2"	6	6	–

NOTE: SEE SHEET 1 FOR DOOR CAPACITIES

Approved as complying with the
Florida Building Code
Date 8/1/13
NOAC 13-0226.06
Miami Dade Product Control
By [signature]

Engr: JAVAD AHMAD
CIVIL
FLA. PE # 70592
C.A.N. 3538

JUL 31 2013

AL-FAROOQ CORPORATION
ENGINEERS & PRODUCT DEVELOPMENT
1235 S.W. 87 AVE
MIAMI, FLORIDA 33174
TEL. (305) 264-8100 FAX. (305) 262-6978
COMP-ANL\W13-01CGI

SERIES 160 SENTINEL ALUM OUTSWING DOOR (L.M.I./S.M.I.)

CGI WINDOWS & DOORS
10100 N.W. 25TH STREET
MIAMI, FL. 33172
TEL. (305) 593-6590 FAX. (305) 593-6592

revisions:

no	date	by	description
A	05.02.13		REV. PER RER COMMENTS

date: 01-03-13
scale: 3/8" = 1"
dr. by: HAMID
chk. by:

drawing no.
W13-01

sheet 2 of 11

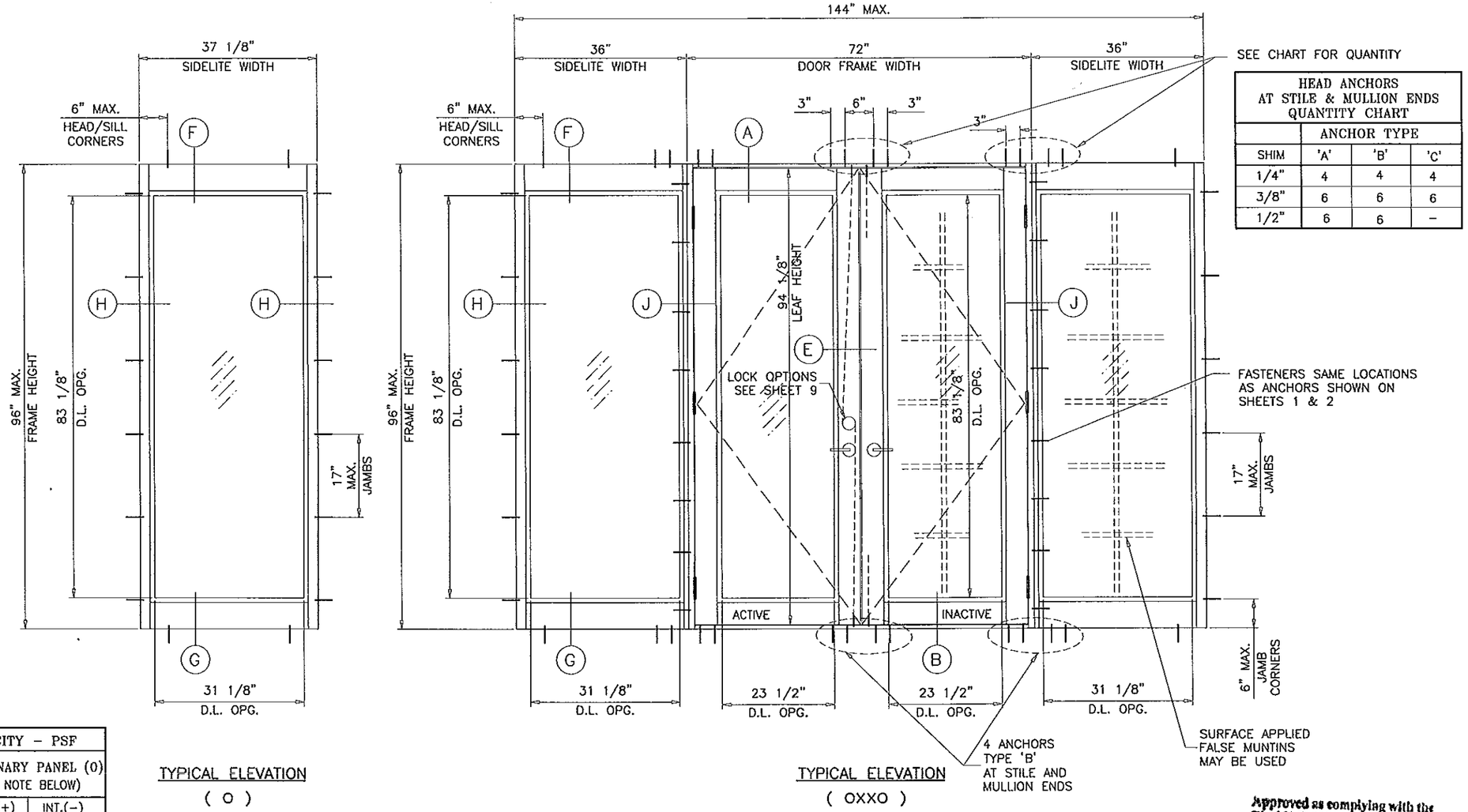

TYPICAL ELEVATION
(O)

TYPICAL ELEVATION
(OXXO)

SIDELITE OPTIONS

HEAD ANCHORS AT STILE & MULLION ENDS QUANTITY CHART			
	ANCHOR TYPE		
SHIM	'A'	'B'	'C'
1/4"	4	4	4
3/8"	6	6	6
1/2"	6	6	–

DESIGN LOAD CAPACITY – PSF			
SIDELITE WIDTH INCHES	SIDELITE FRAME HEIGHT INCHES	STATIONARY PANEL (0) (SEE NOTE BELOW)	
		EXT.(+)	INT.(–)
24	84	80.0	80.0
30		80.0	80.0
33		80.0	80.0
36		80.0	80.0
37–1/8		77.6	77.6
39		73.8	73.8
42		68.6	68.6
24	90	80.0	80.0
30		80.0	80.0
33		80.0	80.0
36		80.0	80.0
37–1/8		77.6	77.6
39		73.8	73.8
24	96	80.0	80.0
30		80.0	80.0
33		80.0	80.0
36		80.0	80.0
37–1/8		77.6	77.6

SIDELITE D.L.O. DIMS.

D.L.O. HEIGHT = FRAME HEIGHT – 12.875"
D.L.O. WIDTH = SIDELITE WIDTH – 6" STAND ALONE SIDELITE ONLY
D.L.O. WIDTH = SIDELITE WIDTH – 4.875 SIDELITE TO DOOR ONLY

Approved as complying with the Florida Building Code
Date 8/1/13
NOA# 13-0226.06
Miami Dade Product Control
By Ishay I. Chand

Engr: JAVAD AHMAD
CIVIL
FLA. PE # 70592
C.A.N. 3538
JUL 21 2013

AL-FAROOQ CORPORATION
ENGINEERS & PRODUCT DEVELOPMENT
1235 S.W. 87 AVE
MIAMI, FLORIDA 33174
TEL. (305) 264-8100 FAX. (305) 262-6978
COMP-ANL\W13-01CGI

SERIES 160 SENTINEL ALUM OUTSWING DOOR (L.M.I./S.M.I.)

CGI WINDOWS & DOORS
10100 N.W. 25TH STREET
MIAMI, FL. 33172
TEL. (305) 593-6590 FAX. (305) 593-6592

revisions:

no	date	by	description
A	05.02.13		REV. PER RER COMMENTS

date: 01-03-13
scale: 1/2"=1'-0"
dr. by: HAMID
chk. by:

drawing no.
W13-01

sheet 3 of 11

DESIGN LOAD CAPACITY – PSF				
SIDELITE WIDTH INCHES	DOOR LEAF WIDTH INCHES	SIDELITE FRAME HEIGHT INCHES	SIDELITE TO DOOR MULLION (SEE NOTE BELOW)	
			EXT.(+)	INT.(–)
24	35	84	80.0	80.0
30			80.0	80.0
33			80.0	80.0
36			80.0	80.0
37–1/8			77.6	77.6
39			73.8	73.8
42			68.6	68.6
24	35	90	80.0	80.0
30			80.0	80.0
33			80.0	80.0
36			80.0	80.0
37–1/8			77.6	77.6
39			73.8	73.8
24	35	96	80.0	80.0
30			80.0	80.0
33			80.0	80.0
36			80.0	80.0
37–1/8			77.6	77.6

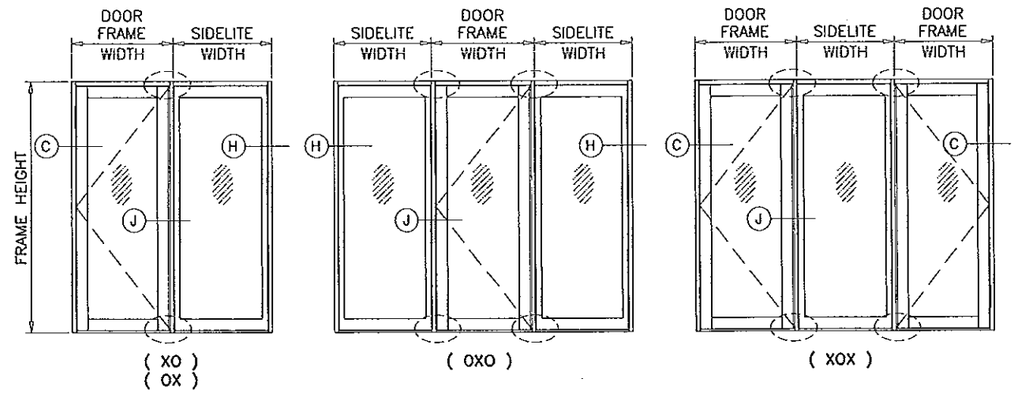

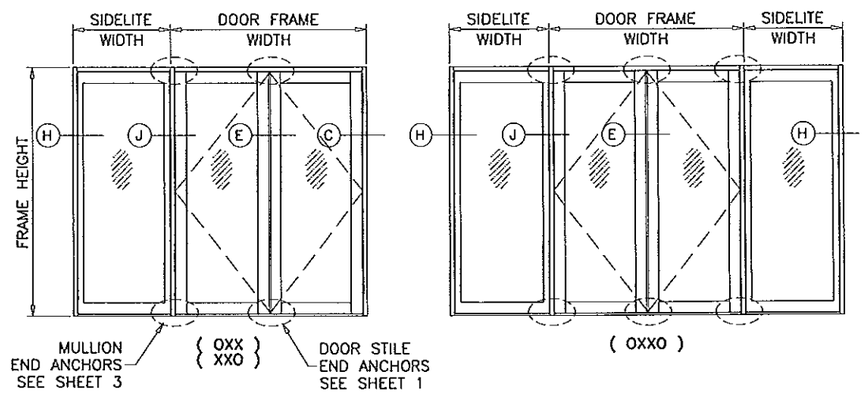

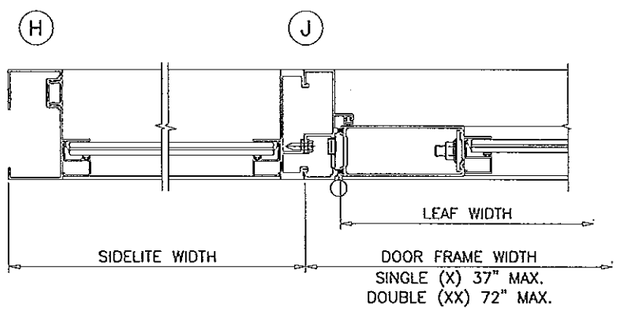

SIDELITE TO DOOR

INSTRUCTIONS:

USE CHARTS AS FOLLOWS.

1. SELECT SINGLE OR DOUBLE DOORS CAPACITY FROM TABLES ON SHEET 1.
2. SELECT LOWER OF SIDELITE TO DOOR MULLION CAPACITY FROM TABLE ABOVE.
3. LOWER VALUES FROM STEPS 1 OR 2 WILL APPLY TO ENTIRE SYSTEM.

Approved as complying with the Florida Building Code
Date 8/1/13
NOAA 13-0226.06
Miami Dade Product Control
By

NOTE:
GLASS CAPACITIES ON THIS SHEET ARE BASED ON ASTM E1300–04 (3 SEC. GUSTS) AND FLORIDA BUILDING COMMISSION DECLARATORY STATEMENT DCA05–DEC–219

Engr: JAVAD AHMAD
CIVIL
FLA. PE # 70592
C.A.N. 3538
JUL 31 2013

AL-FAROOQ CORPORATION
ENGINEERS & PRODUCT DEVELOPMENT
1235 S.W. 87 AVE
MIAMI, FLORIDA 33174
TEL. (305) 264-8100 FAX. (305) 262-6978

COMP–ANL\W13–01CGI

SERIES 160 SENTINEL ALUM. OUTSWING DOOR (L.M.I./S.M.I.)

CGI WINDOWS & DOORS
10100 N.W. 25TH STREET
MIAMI, FL. 33172
TEL. (305) 593–6590 FAX. (305) 593–6592

revisions:

no	date	by	description
A	05.02.13		REV. PER RER COMMENTS

date: 01–03–13
scale: 1/2"=1'–0"
dr. by: HAMID
chk. by:

drawing no.
W13–01

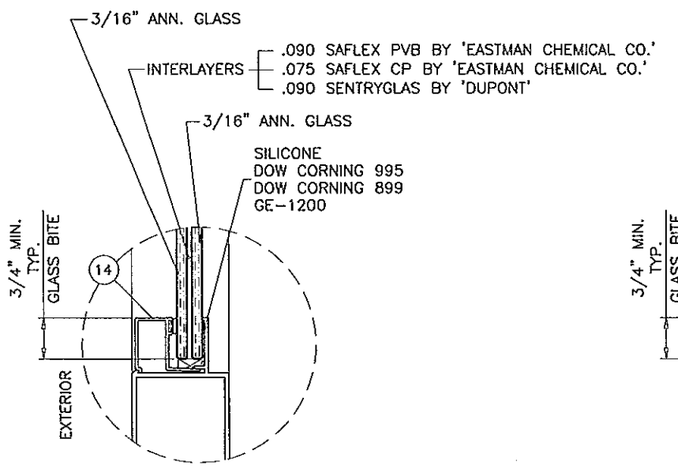

7/16" LAM. GLASS

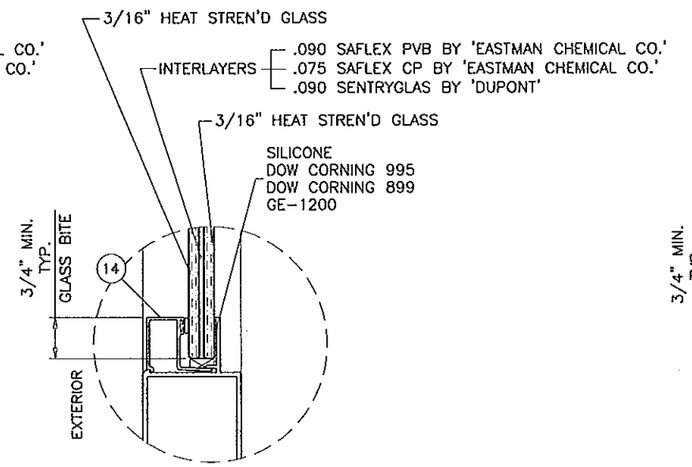

7/16" LAM. GLASS

GLAZING OPTIONS

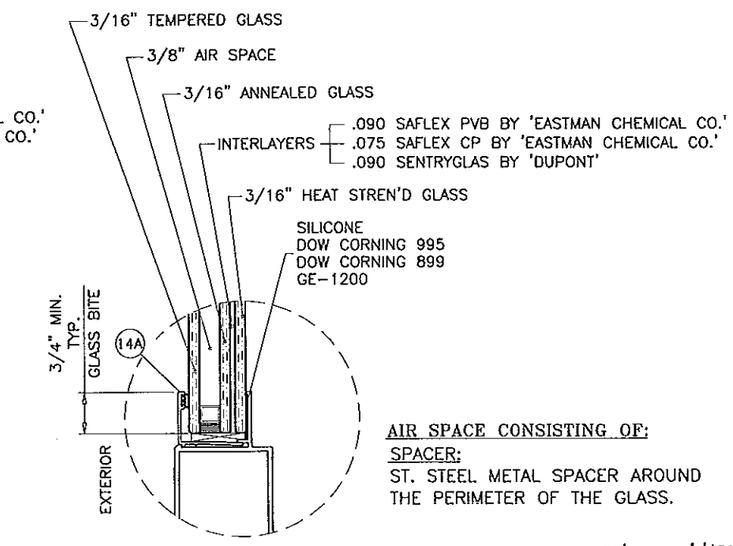

1" OVERALL INSUL. LAM. GLASS

AIR SPACE CONSISTING OF:

SPACER:

ST. STEEL METAL SPACER AROUND THE PERIMETER OF THE GLASS.

Approved as complying with the Florida Building Code
Date 8/1/13
NOA 13-0227.01
Miami-Dade Product Control
By

Engr: JAVAD AHMAD
CIVIL
FLA. PE # 70592
C.A.N. 3538

JUL 31 2013

AL-FAROOQ CORPORATION
ENGINEERS & PRODUCT DEVELOPMENT
1235 S.W. 87 AVE
MIAMI, FLORIDA 33174
TEL. (305) 264-8100 FAX. (305) 262-6978

COMP-ANL\W13-01CGI

SERIES 160 SENTINEL ALUM OUTSWING DOOR (L.M.L./S.M.L.)

CGI WINDOWS & DOORS
10100 N.W. 25TH STREET
MIAMI, FL. 33172
TEL. (305) 593-6590 FAX. (305) 593-6592

revisions:

no	date	by	description
A	05.02.13		REV. PER RER COMMENTS

date: 01-03-13
scale: 3/8" = 1"
dr. by: HAMID
chk. by:

drawing no.
W13-01

sheet 5 of 11

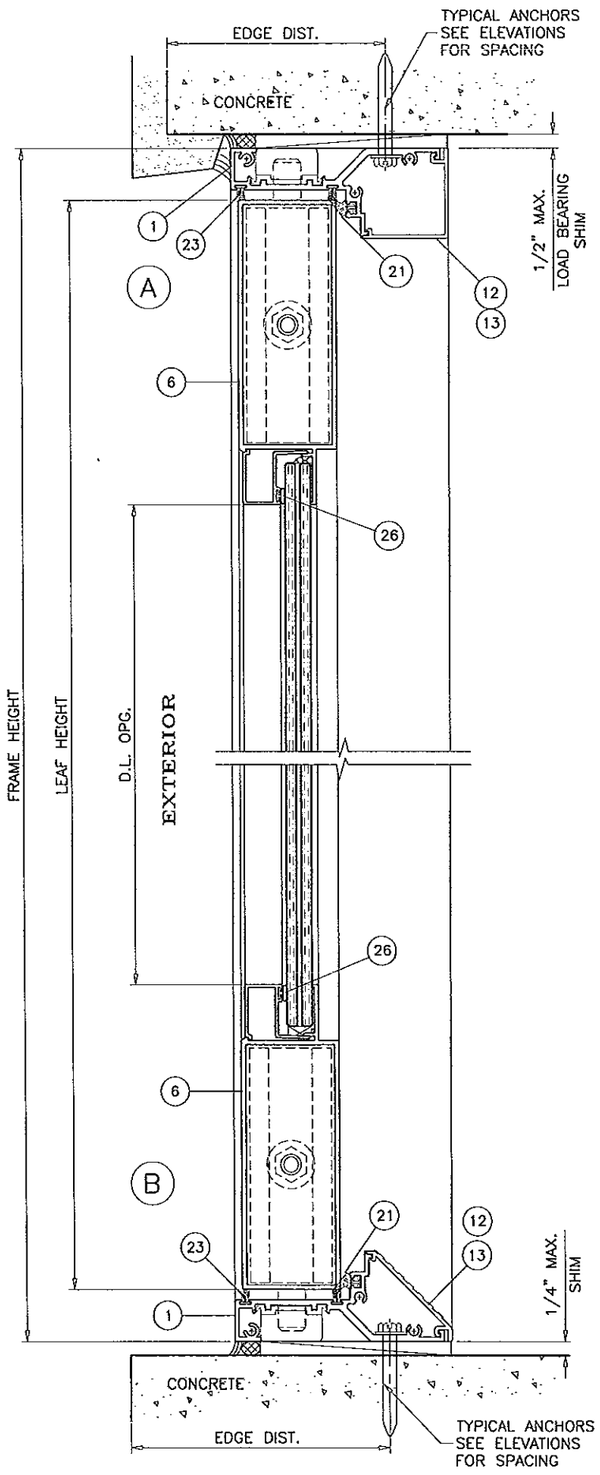

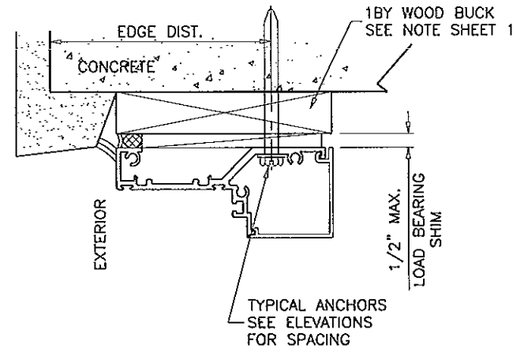

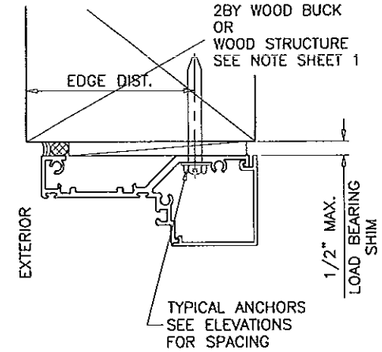

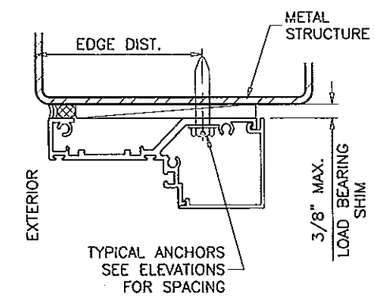

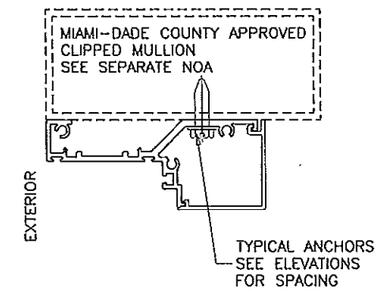

WOOD BUCKS AND METAL STRUCTURE NOT BY CGI WINDOWS MUST SUSTAIN LOADS IMPOSED BY GLAZING SYSTEM AND TRANSFER THEM TO THE BUILDING STRUCTURE.

TYPICAL ANCHORS: SEE ELEV. FOR SPACING

TYPE 'A'– 1/4" DIA. ULTRACON BY 'ELCO' (Fu=177 KSI, Fy=155 KSI)
INTO 2BY WOOD BUCKS OR WOOD STRUCTURES
1–1/2" MIN. PENETRATION INTO WOOD (HEAD/JAMBS)

THRU 1BY BUCKS INTO CONC. OR MASONRY
1–3/4" MIN. EMBED INTO CONCRETE (HEAD/SILL)
1–1/4" MIN. EMBED INTO CONC. OR MASONRY (JAMBS)

TYPE 'B'– 1/4" DIA. ULTRACON BY 'ELCO' (Fu=177 KSI, Fy=155 KSI)
DIRECTLY INTO CONC. OR MASONRY
1–3/4" MIN. EMBED INTO CONCRETE (HEAD/SILL)
1–1/4" MIN. EMBED INTO CONC. OR MASONRY (JAMBS)

TYPE 'C'– #14 ST/ST SMS OR SELF DRILLING SCREWS (Fu=100 KSI, Fy=65 KSI)
INTO MIAMI–DADE COUNTY APPROVED MULLIONS (MIN. THK. = 1/8")
INTO METAL STRUCTURES (HEAD/SILL/JAMBS)
STEEL : 12 GA. MIN. (Fy = 36 KSI MIN.)
ALUMINUM : 1/8" THK. MIN. (6063–T5 MIN.)
(STEEL IN CONTACT WITH ALUMINUM TO BE PLATED OR PAINTED)

TYPICAL EDGE DISTANCE

INTO CONCRETE AND MASONRY = 2–1/2" MIN.
INTO WOOD STRUCTURE = 1" MIN.
INTO METAL STRUCTURE = 3/4" MIN.

CONCRETE AT HEAD, SILL OR JAMBS f'c = 3000 PSI MIN.
C–90 HOLLOW/FILLED BLOCK AT JAMBS f'm = 2000 PSI MIN.

ANCHORS MAY BE HEX OR FLAT HEAD.

SEALANTS:

ALL JOINTS AND FRAME CONNECTIONS SEALED WITH GE SCS2000 SILICONE SEALANT.

DOOR DETAILS

Approved as complying with the Florida Building Code
Date 8/1/13
NOA# 13-0226.06
Miami Dade Product Control
By Ishaq I. Chand

Engr: JAVAD AHMAD
CIVIL
FLA. PE # 70592
C.A.N. 3538
JUL 31 2013

AL-FAROOQ CORPORATION
ENGINEERS & PRODUCT DEVELOPMENT
1235 S.W. 87 AVE
MIAMI, FLORIDA 33174
TEL. (305) 264-8100 FAX. (305) 262-6978
COMP-ANL\W13-01CGI

SERIES 160 SENTINEL ALUM OUTSWING DOOR (L.M.I./S.M.I.)

CGI WINDOWS & DOORS
10100 N.W. 25TH STREET
MIAMI, FL. 33172
TEL. (305) 593-6590 FAX. (305) 593-6592

revisions:

no	date	by	description
A	05.02.13		REV. PER RER COMMENTS

date: 01-03-13
scale: 3/8" = 1"
dr. by: HAMID
chk. by:

drawing no. W13-01

sheet 6 of 11

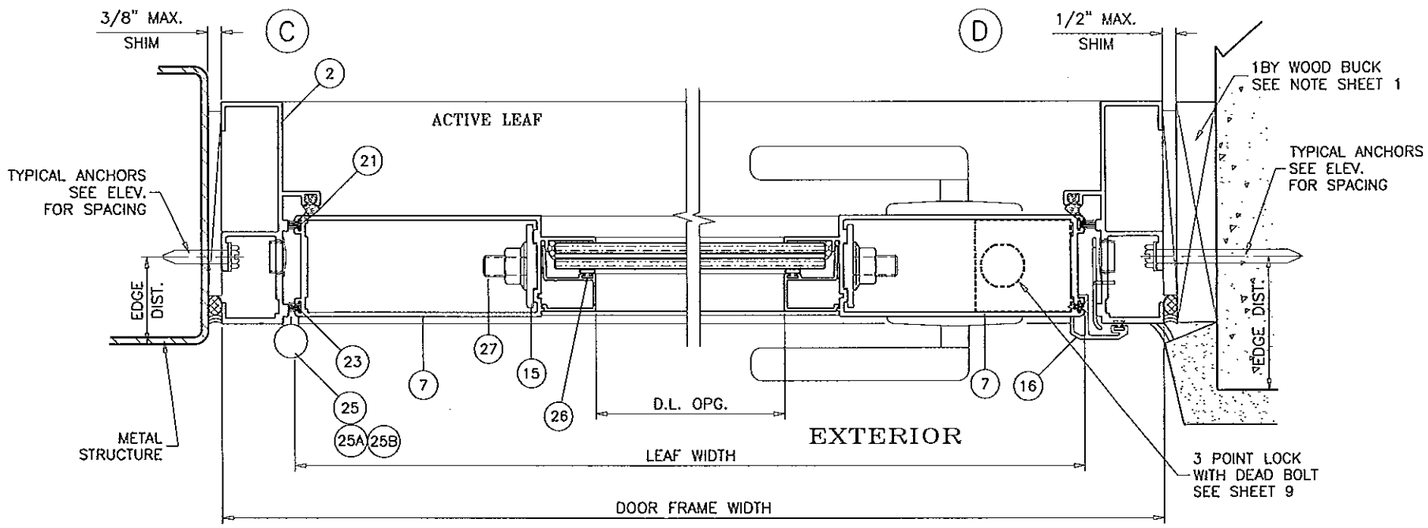

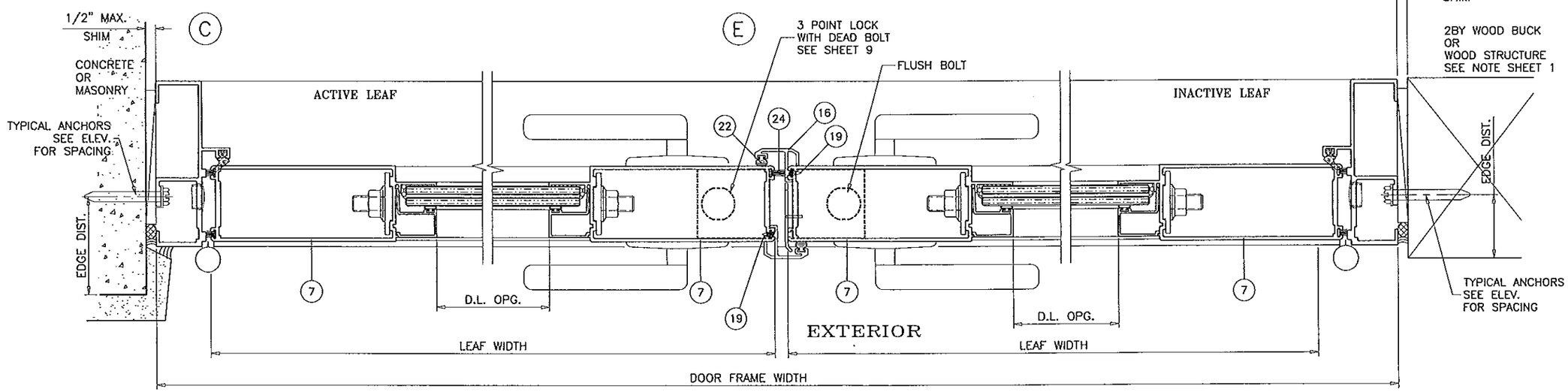

Approved as complying with the
Florida Building Code
Date 8/14/13
NOAA 13-0826.06
Miami-Dade Product Control
By

Engr: JAVAD AHMAD
CIVIL
FLA. PE # 70592
C.A.N. 3538

JUL 31 2013

DOOR DETAILS

AL-FAROOQ CORPORATION
ENGINEERS & PRODUCT DEVELOPMENT
1235 S.W. 87 AVE
MIAMI, FLORIDA 33174
TEL. (305) 264-8100 FAX. (305) 262-6978
COMP-ANL\W13-01CGI

SERIES 160 SENTINEL ALUM OUTSWING DOOR (L.M.L./S.M.L.)

CGI WINDOWS & DOORS
10100 N.W. 25TH STREET
MIAMI, FL. 33172
TEL. (305) 593-6590 FAX. (305) 593-6592

revisions:

no	date	by	description
A	05.02.13		REV. PER RER COMMENTS

date: 01-03-13
scale: 3/8" = 1"
dr. by: HAMID
chk. by:

drawing no.
W13-01

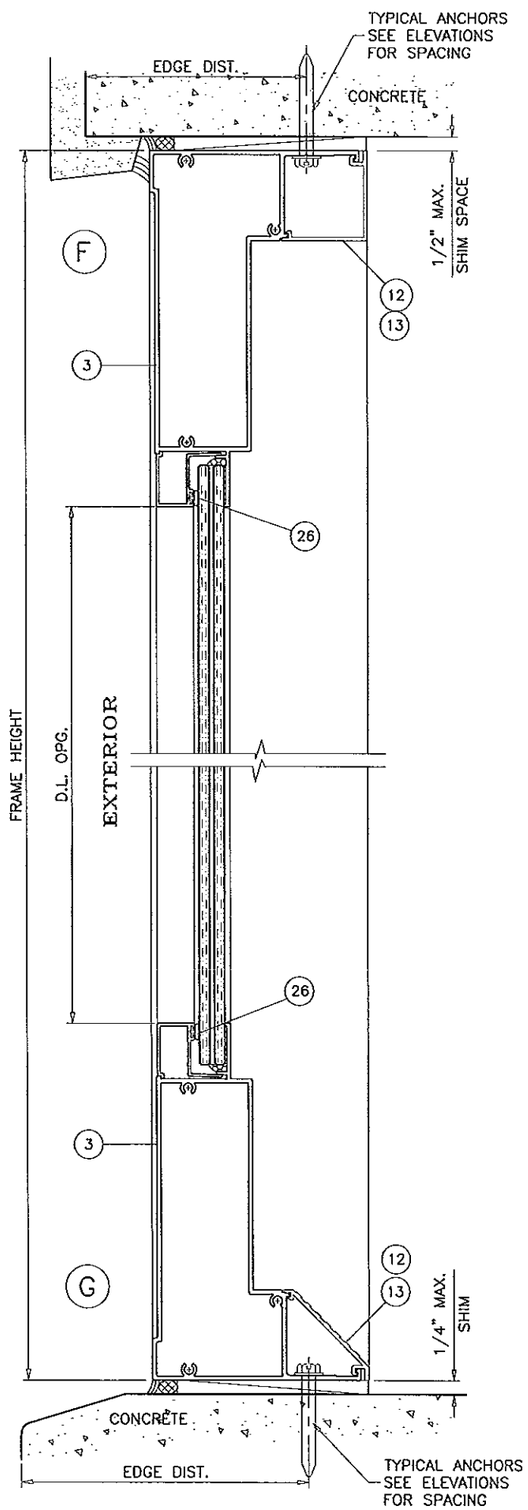

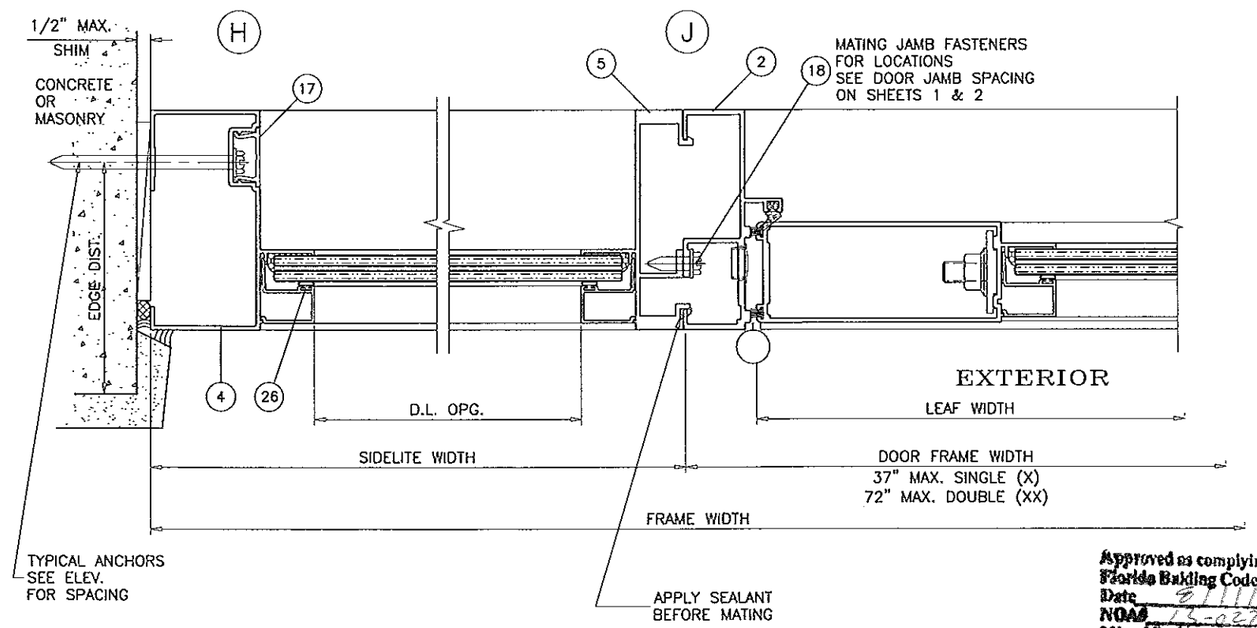

Approved as complying with the Florida Building Code
Date 8/1/13
NOA# 13-0226.06
Miami Dade Product Control
By Shaq Ali

NOTE: LIMIT SHIM TO METAL STRUCTURE AT JAMBS TO 3/8"

Engr: JAVAD AHMAD
CIVIL
FLA. PE # 70592
C.A.N. 3538

JUL 3 2013

SIDELITE DETAILS

AL-FAROOQ CORPORATION
ENGINEERS & PRODUCT DEVELOPMENT
1235 S.W. 87 AVE
MIAMI, FLORIDA 33174
TEL. (305) 264-8100 FAX. (305) 262-6973
COMP-ANL\W13-01CGI

SERIES 160 SENTINEL ALUM. OUTSWING DOOR (L.M.I./S.M.I.)

CGI WINDOWS & DOORS
10100 N.W. 25TH STREET
MIAMI, FL. 33172
TEL. (305) 593-6590 FAX. (305) 593-6592

revisions:

no	date	by	description
A	05.02.13		REV. PER COMMENTS

date: 01-03-13
scale: 3/8" = 1"
dr. by: HAMID
chk. by:

drawing no.
W13-01

BILL OF MATERIALS

EXTRUSIONS

ITEM #	PART No.	DESCRIPTION	MATERIAL	MANUF.	REMARKS
1	CGI-189	FRMAE HEAD AND SILL	6063-T6	CGI EXTRUDER	
2	CGI-190	FRAME JAMB	6063-T6	CGI EXTRUDER	
3	CGI-196	SIDELITE HEAD AND SILL	6063-T6	CGI EXTRUDER	
4	CGI-197	FREE STANDING SIDELITE JAMB	6063-T6	CGI EXTRUDER	
5	CGI-198	MATING SIDELITE JAMB	6063-T6	CGI EXTRUDER	
6	CGI-193	PANEL TOP AND BOTTOM RAIL	6063-T6	CGI EXTRUDER	
7	CGI-194	PANEL VERTICAL STILE	6063-T6	CGI EXTRUDER	
9	CGI-199	SHEAR BLOCK	6063-T6	CGI EXTRUDER	
12	CGI-191	FRAME HEAD AND SILL CREW COVER	6063-T5	CGI EXTRUDER	
13	CGI-192	FRAME HEAD AND SILL SLANTED SCREW COVER	6063-T5	CGI EXTRUDER	
14	CGI-121	7/16" GLASS GLAZING BEAD	6063-T5	CGI EXTRUDER	
14A	CGI-123	1" GLASS GLAZING BEAD	6063-T5	CGI EXTRUDER	
15	CGI-200	SHEAR BLOCK PLATE	6063-T6	CGI EXTRUDER	
16	CGI-195	ASTRAGAL	6063-T5	CGI EXTRUDER	
17	CGI-508	SCREW COVER	6063-T5	CGI EXTRUDER	

LOCKING HARDWARE

	PART No.	DESCRIPTION	MATERIAL	MANUF.	REMARKS
	CGI-4503PL	3 POINT LOCK ASSEMBLY (ACTIVE LEAF)		CGI-CUSTOM	USED BY ALL OPTIONS
	CGI-1204	FLUSHBOLT ASSEMBLY (INACTIVE LEAF)		CGI-CUSTOM	USED BY ALL OPTIONS
OPTION 1	5455 PASS	ACTIVE LEVER (ACTIVE LEAF)		BALDWIN	
	5455 FD	DUMMY LEVER (INACTIVE LEAF)		BALDWIN	OPTIONAL
	8231	DEADBOLT (ACTIVE LEAF)		BALDWIN	
OPTION 2	JD60	DEADBOLT (ACTIVE LEAF)		DEXTER BY SCH.	
	J10 TDR605	ACTIVE LEVER (ACTIVE LEAF)		DEXTER BY SCH.	
	J10 TDR605	DUMMY LEVER (INACTIVE LEAF)		DEXTER BY SCH.	OPTIONAL
OPTION 3	DB2410	DEADBOLT (ACTIVE LEAF)		COPPER CREEK	
	BL2220	ACTIVE LEVER (ACTIVE LEAF)		COPPER CREEK	
	BL2290	DUMMY LEVER (INACTIVE LEAF)		COPPER CREEK	OPTIONAL

SCREWS

ITEM #	PART No.	DESCRIPTION			REMARKS
18		# 14 X 3/4" HEX HEAD TEKS - MULLION ATTACHMENT			
19		# 6 X 1/2" PAN HEAD SMS - ASTRAGAL ATTACHMENT			12" FROM ENDS
20		# 10 X 1 1/4" PH SMS - ASSEMBLY			3 PER CORNER

MISCELLANEOUS

ITEM #	CODE	PART No.	DESCRIPTION	MATERIAL	MANUF.	REMARKS
21	M18	XC-1947	FRAME GASKET	FOAM	AMESBURY OR EQUIV.	
22	M6	32084	.350 FOAM GASKET	FOAM	AMESBURY OR EQUIV.	
23	M5	W33321NG	.187 x .320 WEATHERSTRIP PILE W/ CENTER FIN	WOOL	ULTRAFAB OR EQUIV	
24	M8	W33321NG	.187 X .500 HIGH PILE W'STRIPPING	WOOL W/ FIN	ULTRAFAB OR EQUIV	
25	M9	CH-108-B	HINGE (4 1/2" X 4")	ALUMINUM	CGI-CUSTOM	ATTACHED WITH (8) #12-24x1/2" FH MS
25A	M10	AB800-US32D	HINGE (4 1/2" X 4")	BRASS	HAGER	ATTACHED WITH (8) #12-24x1/2" FH MS
25B	M11	AB800-US3	HINGE (4 1/2" X 4")	S/S	HAGER	ATTACHED WITH (8) #12-24x1/2" FH MS
26	M4	CGI-382V	GLAZING BEAD BULB	VINYL	CGI-CUSTOM	
27	M7		3/8"-16 FULLY THREADED ROD - SECURED WITH 3/8" HEX NUT	ZINC PLATED		

NOTE: ITEM NUMBERS 8, 10 & 11 ARE NOT USED

Approved as complying with the Florida Building Code
Date 8/11/13
NOAA 13-0226.01
Miami Dade Product Control
By

Engr: JAVAD AHMAD
CIVIL
FLA. PE # 70592
C.A.N. 3538

JUL 31 2013

AL-FAROOQ CORPORATION
ENGINEERS & PRODUCT DEVELOPMENT
1235 S.W. 87 AVE
MIAMI, FLORIDA 33174
TEL. (305) 264-8100 FAX. (305) 262-6978

COMP-ANL\W13-01CGI

SERIES 160 SENTINEL ALUM OUTSWING DOOR (L.M.I./S.M.I.)

CGI WINDOWS & DOORS
10100 N.W. 25TH STREET
MIAMI, FL. 33172
TEL. (305) 593-6590 FAX. (305) 593-6592

revisions:

no	date	by	description
A	05.02.13		REV. PER RER COMMENTS

date: 01-03-13
scale: 3/8" = 1"
dr. by: HAMID
chk. by:

drawing no.
W13-01

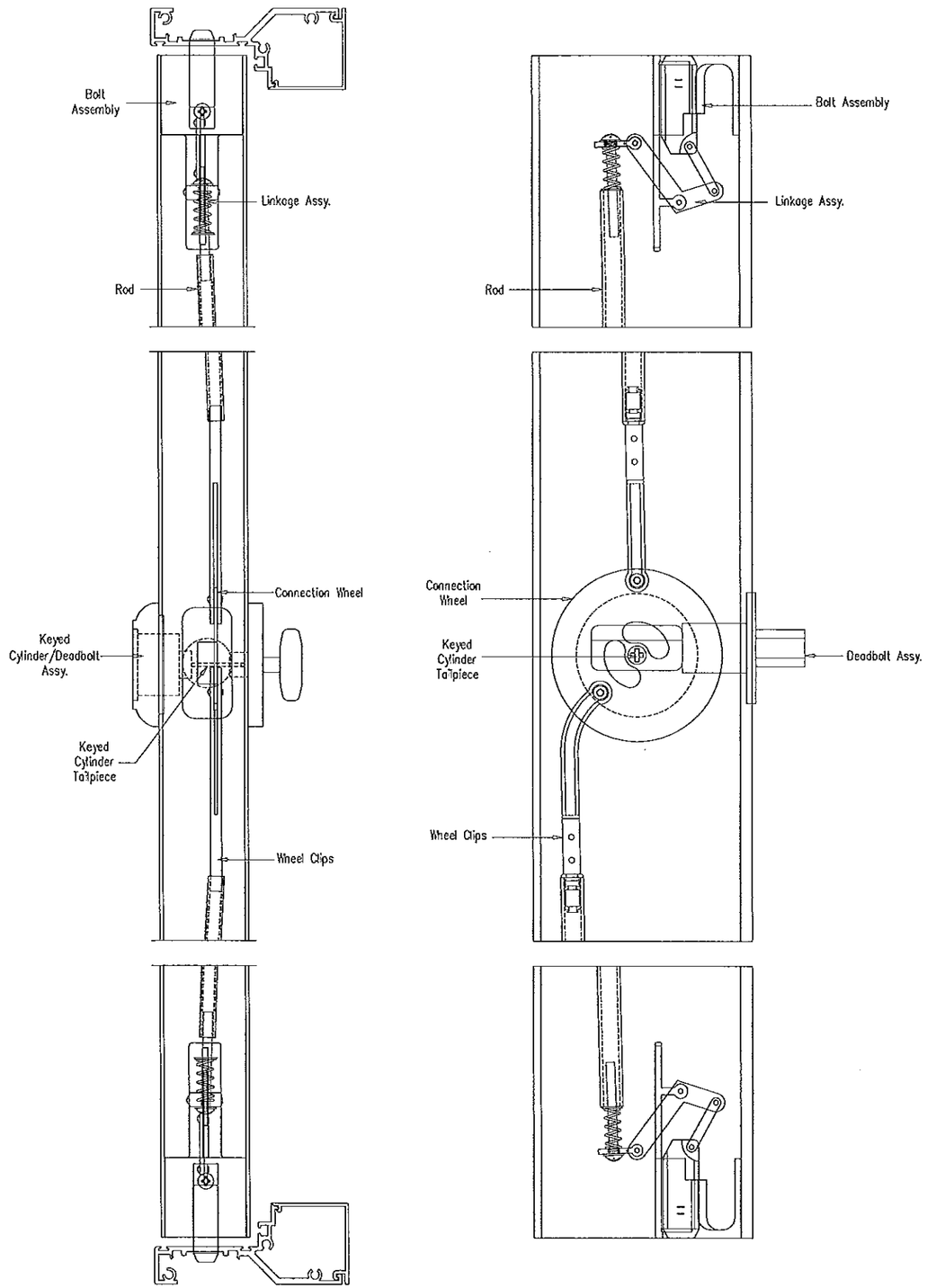

CGI CUSTOM
3-POINT LOCK

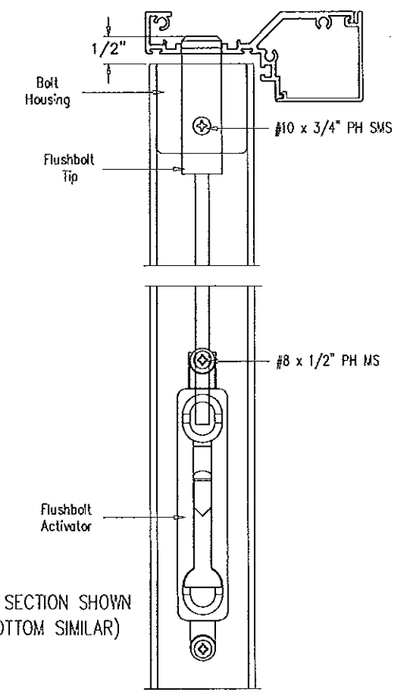

TOP SECTION SHOWN
(BOTTOM SIMILAR)

Flushbolts (Inactive Panel)
Top & Bottom

Approved as complying with the Florida Building Code
Date 8/1/13
NOA# 13-0226.06
Miami Dade Product Control
By Ishag Khanda

Engr: JAVAD AHMAD
CIVIL
FLA. PE # 70592
C.A.N. 3538
JUL 31 2013

AL-FAROOQ CORPORATION
ENGINEERS & PRODUCT DEVELOPMENT
1235 S.W. 87 AVE
MIAMI, FLORIDA 33174
TEL. (305) 264-8100 FAX. (305) 262-6978

COMP-ANL\W13-01CGI

SERIES 160 SENTINEL ALUM OUTSWING DOOR (L.M.I./S.M.I.)

CGI WINDOWS & DOORS
10100 N.W. 25TH STREET
MIAMI, FL. 33172
TEL. (305) 593-6590 FAX. (305) 593-6592

revisions:

no	date	by	description
A	05.02.13		REV. PER RER COMMENTS

date: 01-03-13
scale: 3/8" = 1"
dr. by: HAMID
chk. by:

drawing no.
W13-01

sheet 9.1 of 11

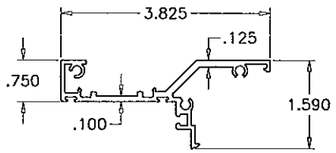

(1) DOOR FRAME HEAD/SILL

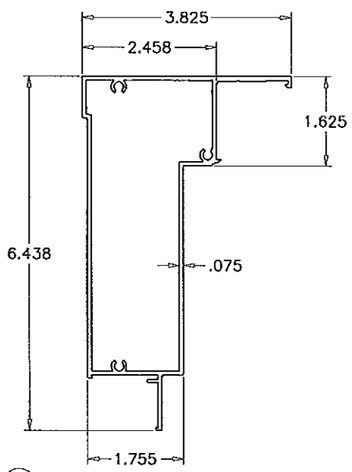

(3) SIDELITE TOP & BOTTOM FRAME

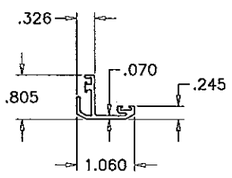

(16) ASTRAGAL ADAPTER

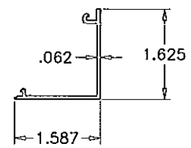

(12) FRAME COVER

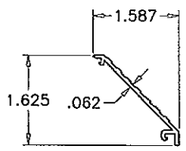

(13) SILL COVER

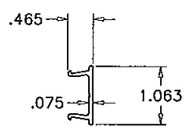

(17) SIDELITE JAMB COVER

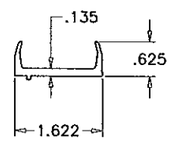

(9) SHEAR BLOCK

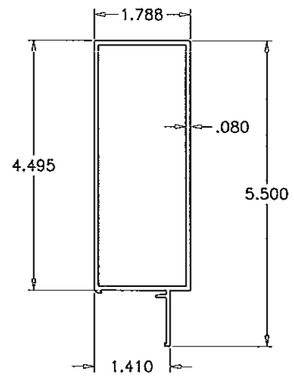

(6) TOP & BOTTOM RAIL

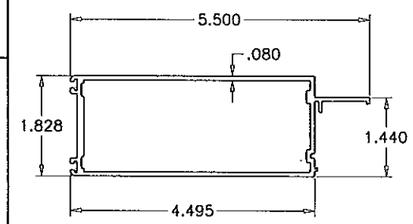

(7) HINGE & LOCK STILE

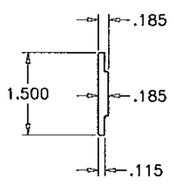

(15) SHEAR BLOCK PLATE

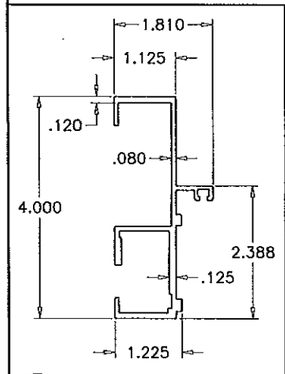

(2) DOOR FRAME JAMB

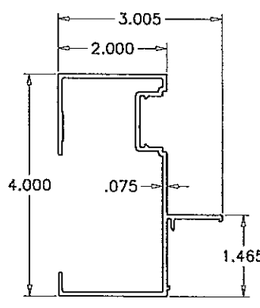

(4) SIDELITE FRAME JAMB

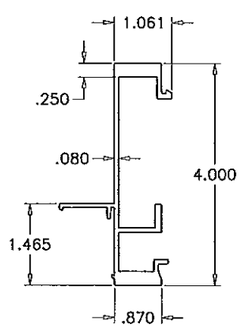

(5) SIDELITE MATING JAMB

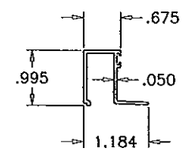

(14) GLASS STOP (LAM. GLASS)

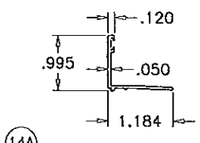

(14A) GLASS STOP (INSUL. LAM. GLASS)

Approved as complying with the Florida Building Code
Date 8/1/13
NOA# 13-0226.01
Miami Dade Product Control
By

Engr: JAVAD AHMAD
CIVIL
FLA. PE # 70592
C.A.N. 3538

JUL 31 2013

AL-FAROOQ CORPORATION
ENGINEERS & PRODUCT DEVELOPMENT
1235 S.W. 87 AVE
MIAMI, FLORIDA 33174
TEL. (305) 264-8100 FAX. (305) 262-6978
COMP-ANL\W13-01CGI

SERIES 160 SENTINEL ALUM. OUTSWING DOOR (L.M.I./S.M.I.)

CGI WINDOWS & DOORS
10100 N.W. 25TH STREET
MIAMI, FL. 33172
TEL. (305) 593-6590 FAX. (305) 593-6592

revisions:

no	date	by	description
A	05.02.13		REV. PER RER COMMENTS

date: 01-03-13
scale: 3/8" = 1"
dr. by: HAMID
chk. by:

drawing no.
W13-01

sheet 10 of 11

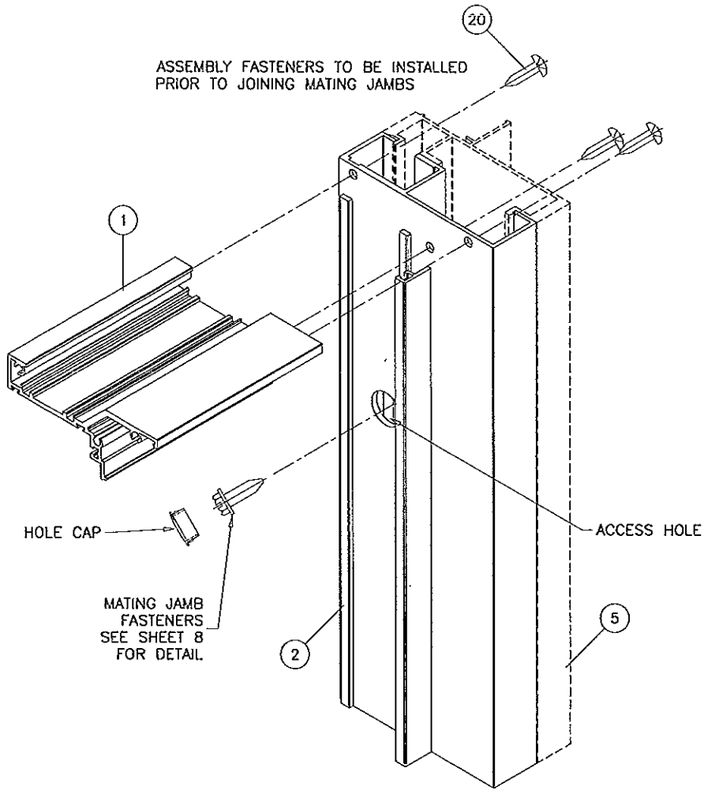

DOOR FRAME TOP & BOTTOM CORNER

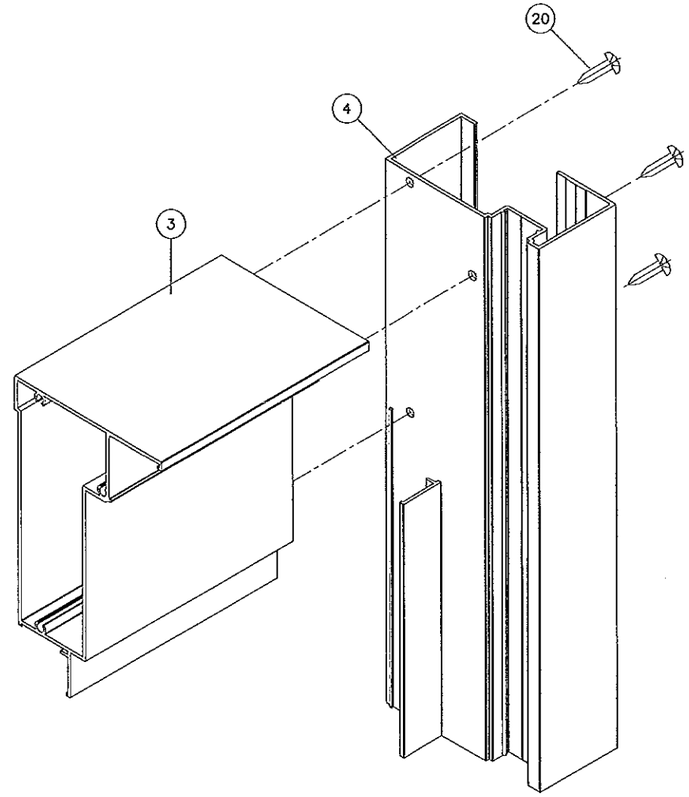

SIDELITE JAMB CORNER
TOP & BOTTOM

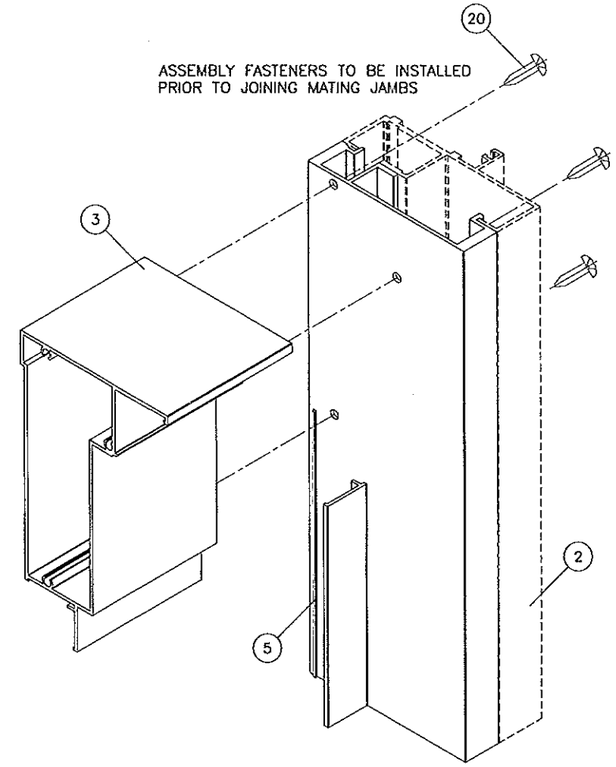

SIDELITE MATING JAMB CORNER
TOP & BOTTOM

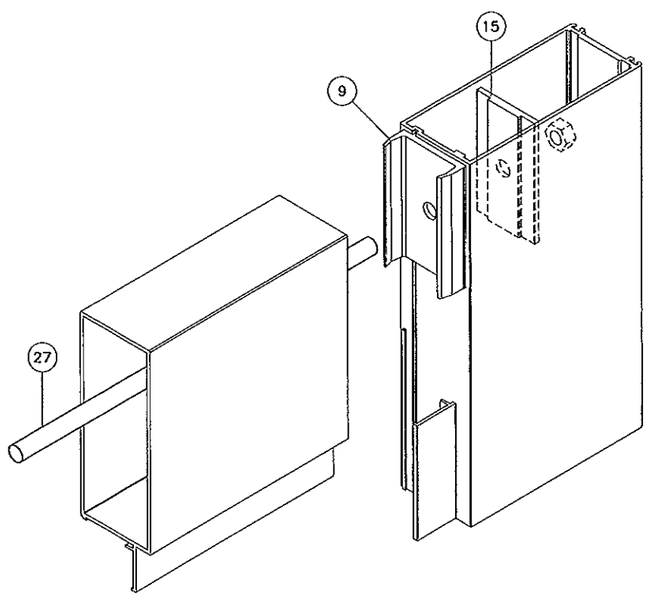

LEAF TOP & BOTTOM CORNER

Approved as complying with the
Florida Building Code
Date AUG 08, 2013
NOA# 13-0326.01
Miami-Dade Product Control
By

Engr: JAVAD AHMAD
CIVIL
FLA. PE # 70592
C.A.N. 3538

JUL 31 2013

AL-FAROOQ CORPORATION
ENGINEERS & PRODUCT DEVELOPMENT
1235 S.W. 87 AVE
MIAMI, FLORIDA 33174
TEL. (305) 264-9100 FAX. (305) 262-6978

COMP-ANL\W13-01CGI

SERIES 160 SENTINEL ALUM. OUTSWING DOOR (L.M.I./S.M.I.)

CGI WINDOWS & DOORS
10100 N.W. 25TH STREET
MIAMI, FL. 33172
TEL. (305) 593-6590 FAX. (305) 593-6592

revisions:

no	date	by	description
A	05.02.13		REV. PER RER COMMENTS

date: 01-03-13
scale: 3/8" = 1"
dr. by: HAMID
chk. by:

drawing no.
W13-01

sheet 11 of 11