MIAMI-DADE COUNTY
PRODUCT CONTROL SECTION
11805 SW 26 Street, Room 208
Miami, Florida 33175-2474
T (786) 315-2590 F (786) 315-2599
www.miamidade.gov/economy

DEPARTMENT OF REGULATORY AND ECONOMIC RESOURCES (RER)
BOARD AND CODE ADMINISTRATION DIVISION

NOTICE OF ACCEPTANCE (NOA)

R. C. Aluminum Industries, Inc.
2805 NW 75th Ave
Miami, FL 33122

SCOPE:

This NOA is being issued under the applicable rules and regulations governing the use of construction materials. The documentation submitted has been reviewed and accepted by Miami-Dade County RER - Product Control Section to be used in Miami Dade County and other areas where allowed by the Authority Having Jurisdiction (AHJ).

This NOA shall not be valid after the expiration date stated below. The Miami-Dade County Product Control Section (In Miami Dade County) and/or the AHJ (in areas other than Miami Dade County) reserve the right to have this product or material tested for quality assurance purposes. If this product or material fails to perform in the accepted manner, the manufacturer will incur the expense of such testing and the AHJ may immediately revoke, modify, or suspend the use of such product or material within their jurisdiction. RER reserves the right to revoke this acceptance, if it is determined by Miami-Dade County Product Control Section that this product or material fails to meet the requirements of the applicable building code.

This product is approved as described herein, and has been designed to comply with the Florida Building Code, including the High Velocity Hurricane Zone.

DESCRIPTION: Series 2200ST Aluminum Sliding Glass Door-L.M.I.

APPROVAL DOCUMENT: Drawing No. **W11-13** Rev **B**, titled "Series- 2000ST Alum Sliding Glass Door (L.M.I.)", sheets 1through 9 of 9, prepared by AL- Farooq Corporation, dated 06/09/11 and last revised on FEB 27, 2013, signed and sealed by Javad Ahmad, P.E., bearing the Miami-Dade County Product Control Revision stamp with the Notice of Acceptance number and expiration date by the Miami-Dade County Product Control Section.

MISSILE IMPACT RATING: Large Missile Impact Resistant

Limitation:

1. Max load bearing shim not to exceed ½" at head, ¾" at sill (high strength poured & hardened grout) and at jambs per sheet 5.

LABELING: Each unit shall bear a permanent label with the manufacturer's name or logo, city, state and series and following statement: "Miami-Dade County Product Control Approved", noted herein.

RENEWAL of this NOA shall be considered after a renewal application has been filed and there has been no change in the applicable building code negatively affecting the performance of this product.

TERMINATION of this NOA will occur after the expiration date or if there has been a revision or change in the materials, use, and/or manufacture of the product or process. Misuse of this NOA as an endorsement of any product, for sales, advertising or any other purposes shall automatically terminate this NOA. Failure to comply with any section of this NOA shall be cause for termination and removal of NOA.

ADVERTISEMENT: The NOA number preceded by the words Miami-Dade County, Florida, and followed by the expiration date may be displayed in advertising literature. If any portion of the NOA is displayed, then it shall be done in its entirety.

INSPECTION: A copy of this entire NOA shall be provided to the user by the manufacturer or its distributors and shall be available for inspection at the job site at the request of the Building Official.

This NOA **revises NOA # 11-0421.01** and consists of this page 1 and evidence pages E-1, as well as approval document mentioned above.

The submitted documentation was reviewed by **Ishaq I. Chanda, P.E.**

MIAMI-DADE COUNTY APPROVED

5/14/13

NOTICE OF ACCEPTANCE: EVIDENCE SUBMITTED

A. DRAWINGS

1. Manufacturer's die drawings and sections (submitted under file # **11-0421.01**)
2. Drawing No. **W11-13** Rev **B**, titled "Series- 2000ST Alum Sliding Glass Door (L.M.I.)", sheets 1through 9 of 9, prepared by AL- Farooq Corporation, dated 06/09/11 and last revised on FEB 27, 2013, signed and sealed by Javad Ahmad, P.E.

Note: This revision includes FBC 2010 note update only.

B. TESTS (submitted under file # **11-0421.01**)

1. Test reports on: 1) Air Infiltration Test, per FBC, TAS 202-94
   2) Uniform Static Air Pressure Test, Loading per FBC TAS 202-94
   3) Water Resistance Test, per FBC, TAS 202-94
   4) Large Missile Impact Test per FBC, TAS 201-94
   5) Cyclic Wind Pressure Loading per FBC, TAS 203-94
   6) Forced Entry Test, per FBC 2411 3.2.1, TAS 202-94

along with marked-up drawings and installation diagram of OXXO & OX aluminum sliding glass doors, Fenestration Testing Laboratory, Inc., Test Report No. **FTL-6363**, dated 02/04/11, signed and sealed by Marlin D. Brinson, P. E.

C. CALCULATIONS (submitted under file # **11-0421.01**)

1. Anchor verification calculations and structural analysis, complying with FBC-2007, prepared by Al-Farooq Corporation, dated 04/13/11 and last revised on 06/06/11, signed and sealed by Javad Ahmad, P.E.
2. Glazing complies w/ ASTME-1300-02 & -04

D. QUALITY ASSURANCE

1. Miami Dade Department of Regulatory and Economic Resources (RER).

E. MATERIAL CERTIFICATIONS

1. Notice of Acceptance No. **11-0624.02** issued to E.I. DuPont DeNemours & Co., Inc. for their **"DuPont Sentry Glass ®"**, expiring on 01/14/17.

F. STATEMENTS

1. Statement letter of conformance to FBC 2010 and no changes from previous approval, prepared by Al Farooq Corporation, dated 02/19/13, signed and sealed by Javad Ahmad, P.E.
2. Statement letter of conformance to FBC 2007 and letter of no financial interest, prepared by Al Farooq Corporation, dated 04/13/11, signed and sealed by Javad Ahmad, P.E. (submitted under file # **11-0421.01**)
3. Statement of Lab compliance, as part of above test reports.

G. OTHER

1. This NOA **revises NOA # 11-0421.01,** expiring **07-07-16.**
2. Test proposal #**10-0937**, dated Oct 18, 2010 approved by BCCO.

Ishaq I. Chanda

Ishaq I. Chanda, P.E.
Product Control Examiner
NOA No. 13-0313.03
Expiration Date: July 07, 2016
Approval Date: May 23, 2013

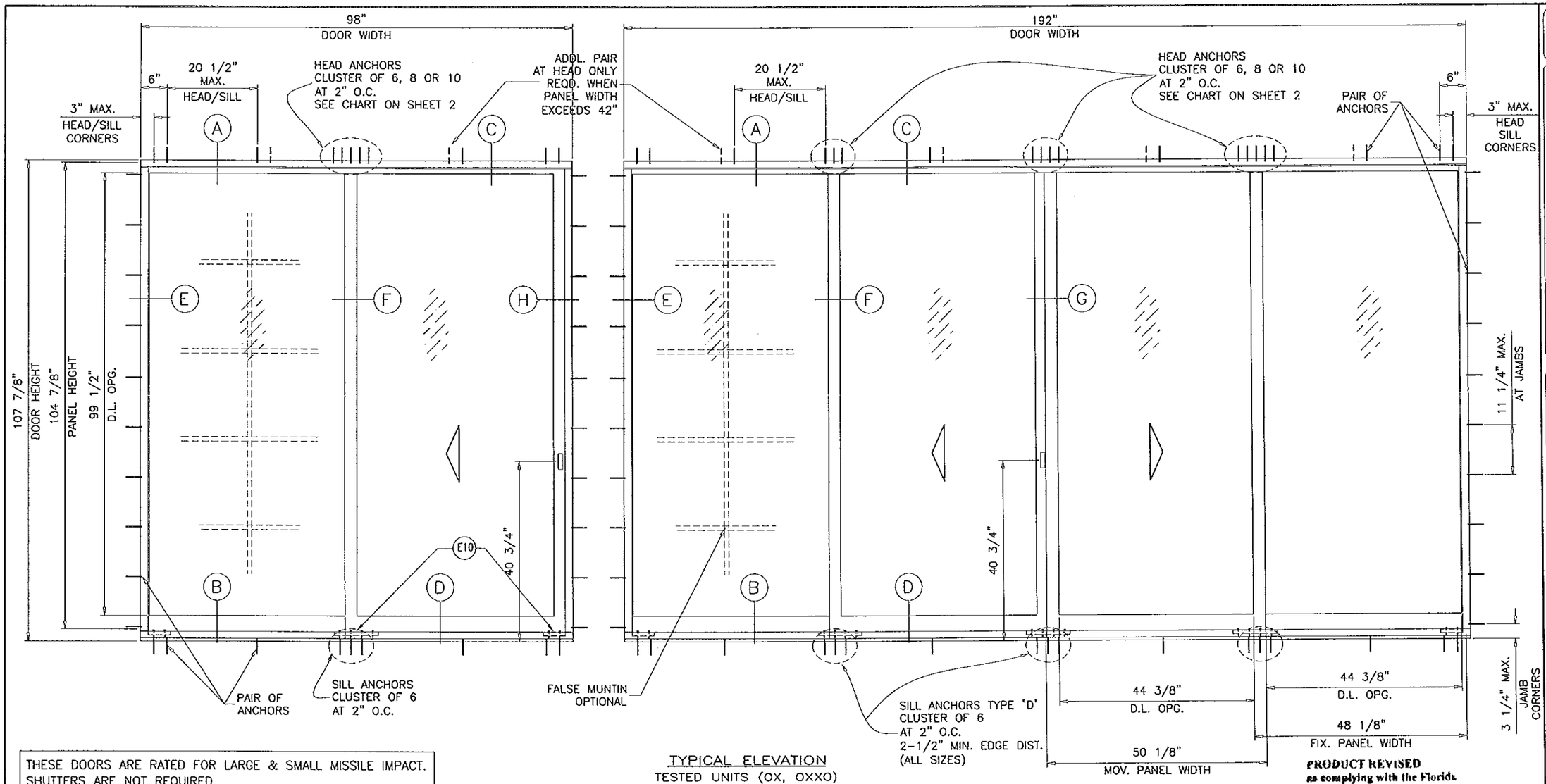

TYPICAL ELEVATION
TESTED UNITS (OX, OXXO)

THESE DOORS ARE RATED FOR LARGE & SMALL MISSILE IMPACT. SHUTTERS ARE NOT REQUIRED.

SERIES 2000ST ALUMINUM SLIDING GLASS DOOR

DESIGN LOAD RATING FOR DOORS TO BE AS PER CHART SHOWN ON SHEET 2.

THIS PRODUCT HAS BEEN DESIGNED AND TESTED TO COMPLY WITH THE REQUIREMENTS OF THE FLORIDA BUILDING CODE INCLUDING HIGH VELOCITY HURRICANE ZONE (HVHZ).

WOOD BUCKS BY OTHERS, MUST BE ANCHORED PROPERLY TO TRANSFER LOADS TO THE STRUCTURE.

ANCHORS SHALL BE AS LISTED, SPACED AS SHOWN ON DETAILS, ANCHORS EMBEDMENT TO BASE MATERIAL SHALL BE BEYOND WALL DRESSING OR STUCCO.

ANCHORING OR LOADING CONDITIONS NOT SHOWN IN THESE DETAILS ARE NOT PART OF THIS APPROVAL.

A LOAD DURATION INCREASE IS USED IN DESIGN OF ANCHORS INTO WOOD ONLY.

MATERIALS INCLUDING BUT NOT LIMITED TO STEEL/METAL SCREWS, THAT COME INTO CONTACT WITH OTHER DISSIMILAR MATERIALS SHALL MEET THE REQUIREMENTS OF THE FLORIDA BLDG. CODE SECTION 2003.8.4.

DAYLITE OPENINGS:
D.L.O. HEIGHT = PANEL HEIGHT − 5.375"
D.L.O. WIDTH (FIX. PANEL) = PANEL WIDTH − 3.750"
D.L.O. WIDTH (OPER. PANEL) = PANEL WIDTH − 5.750"
PANEL HEIGHT = DOOR HEIGHT − 3"

PRODUCT REVISED
as complying with the Florida Building Code
Acceptance No 13-0313.03
Expiration Date July 07, 2016
By [signature]
Miami Dade Product Control

LAMINATED GLASS
LARGE MISSILE IMPACT

Engr: JAVAD AHMAD
CIVIL
FLA. PE # 70592
C.A.N. 3538
FEB 27 2013

AL-FAROOQ CORPORATION
ENGINEERS & PRODUCT DEVELOPMENT
1235 S.W. 87 AVE
MIAMI, FLORIDA 33174
TEL. (305) 264-8100 FAX. (305) 262-6978
COMP-ANL\W11-13RC

SERIES 2000ST ALUM SLIDING GLASS DOOR (L.M.I.)

R.C. ALUMINUM INDUSTRIES INC.
2805 N.W. 75 TH AVE.
MIAMI, FL. 33122
TEL. (305) 592-1515 FAX. (305) 592-2184

revisions:

no	date	by	description
A	06.09.11		REV. PER BNC COMMENTS
B	02.22.13		UPDATED TO 2010 FBC

date: 03-15-11
scale: 1/2"=1'-0"
dr. by: HAMID
chk. by:

drawing no.
W11-13

DESIGN LOAD CAPACITY – PSF							
		1/2" MAX. SHIM SPACE					1/4" MAX. SHIM SPACE
		ANCHORS TYPE 'A'			ANCHORS TYPE 'B'		ANCHORS TYPE 'C'
		6 ANCHORS AT MTG. STILE ENDS	8 ANCHORS AT MTG. STILE ENDS	10 ANCHORS AT MTG. STILE ENDS	6 ANCHORS AT MTG. STILE ENDS	8 ANCHORS AT MTG. STILE ENDS	6 ANCHORS AT MTG. STILE ENDS
PANEL WIDTH NOMINAL INCHES	DOOR HEIGHT INCHES	EXT. (+) INT. (–)	EXT. (+) INT. (–)	EXT. (+) INT. (–)	EXT. (+) INT. (–)	EXT. (+) INT. (–)	EXT. (+) INT. (–)
24	80	120.0	120.0	120.0	120.0	120.0	120.0
30		120.0	120.0	120.0	120.0	120.0	120.0
36		120.0	120.0	120.0	120.0	120.0	120.0
42		120.0	120.0	120.0	120.0	120.0	120.0
48		119.6	120.0	120.0	120.0	120.0	120.0
54		112.3	120.0	120.0	120.0	120.0	120.0
24	84	120.0	120.0	120.0	120.0	120.0	120.0
30		120.0	120.0	120.0	120.0	120.0	120.0
36		120.0	120.0	120.0	120.0	120.0	120.0
42		120.0	120.0	120.0	120.0	120.0	120.0
48		111.6	120.0	120.0	120.0	120.0	120.0
54		104.4	120.0	120.0	118.3	120.0	120.0
24	90	120.0	120.0	120.0	120.0	120.0	120.0
30		120.0	120.0	120.0	120.0	120.0	120.0
36		120.0	120.0	120.0	120.0	120.0	120.0
42		110.9	120.0	120.0	120.0	120.0	120.0
48		101.5	120.0	120.0	114.9	120.0	120.0
54		94.5	120.0	120.0	107.0	120.0	120.0
24	96	120.0	120.0	120.0	120.0	120.0	120.0
30		120.0	120.0	120.0	120.0	120.0	120.0
36		114.5	120.0	120.0	120.0	120.0	120.0
42		102.0	120.0	120.0	115.6	120.0	120.0
48		93.0	120.0	120.0	105.3	120.0	120.0
54		86.3	115.0	120.0	97.7	120.0	120.0
24	102	120.0	120.0	120.0	120.0	120.0	120.0
30		120.0	120.0	120.0	120.0	120.0	120.0
36		106.3	120.0	120.0	120.0	120.0	120.0
42		94.5	120.0	120.0	107.0	120.0	120.0
48		85.8	114.5	120.0	97.2	120.0	120.0
24	108	120.0	120.0	120.0	120.0	120.0	120.0
30		115.2	120.0	120.0	120.0	120.0	120.0
36		99.2	120.0	120.0	112.4	120.0	120.0
42		88.0	117.3	120.0	99.6	120.0	120.0
48		79.7	106.3	120.0	90.3	120.0	120.0

DOOR SIZES MUST COMPLY WITH FBC EGRESS REQUIREMENTS AS APPLICABLE

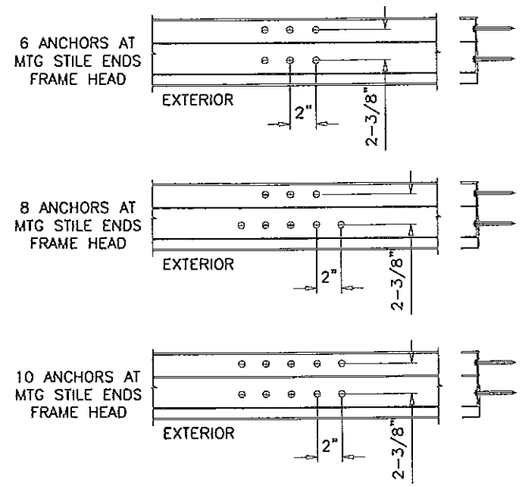

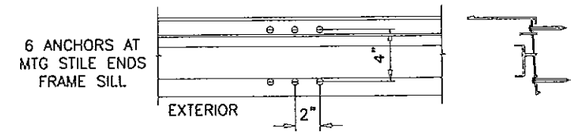

CHART ABOVE SHOWS SLIDING GLASS DOOR CAPACITY WITH 6, 8 OR 10 ANCHORS AT STILE ENDS OF FRAME HEAD. 6 ANCHORS ARE REQUIRED AT STILE ENDS OF FRAME SILL FOR ALL PANEL SIZES AND DESIGN LOADS.

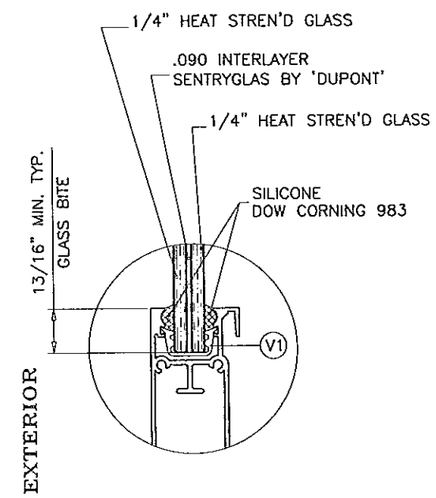

GLAZING DETAIL

9/16" OVERALL LAMINATED GLASS

PRODUCT REVISED
as complying with the Florida Building Code
Acceptance No 13-0313.03
Expiration Date 7/7/16
By Ishaq I. Chaudhry
Miami Dade Product Control

NOTE:
GLASS CAPACITIES ON THIS SHEET ARE BASED ON ASTM E1300-04 (3 SEC. GUSTS) AND FLORIDA BUILDING COMMISSION DECLARATORY STATEMENT DCA05-DEC-219

Engr: JAVAD AHMAD
CIVIL
FLA. PE # 70592
C.A.N. 3538

FEB 27 2013

AL-FAROOQ CORPORATION
ENGINEERS & PRODUCT DEVELOPMENT
1235 S.W. 87 AVE
MIAMI, FLORIDA 33174
TEL. (305) 264-8100 FAX. (305) 262-6978
COMP-ANL\W11-13RC

SERIES 2000ST ALUM SLIDING GLASS DOOR (L.M.I.)

R.C. ALUMINUM INDUSTRIES INC.
2805 N.W. 75 TH AVE.
MIAMI, FL. 33122
TEL. (305) 592-1515 FAX. (305) 592-2184

revisions:

no	date	by	description
A	06.09.11		REV. PER BNC COMMENTS
B	02.22.13		NO CHANGE THIS SHEET

date: 03-15-11
scale: 3/8" = 1"
dr. by: HAMID
chk. by:

drawing no.
W11-13

CODE	PART No.	DESCRIPTION	
		EXTRUSIONS	
E1	2000ST-053	INTERLOCK	6005-T6
E2	2000ST-054	MEETING STILE	6005-T6
E3	2000ST-055	MOVING TOP RAIL	6063-T6
E4	2000ST-056	FIXED TOP RAIL	6063-T6
E5	2000ST-057	MOVING BOTTOM RAIL	6063-T6
E6	2000ST-058	FIXED BOTTOM RAIL	6063-T6
E7	2000ST-059	HEAD ADAPTOR	6063-T6
E8	2000ST-060	THRESHOLD	6063-T6
E9	2000ST-061	SILL ADAPTOR	6005-T5
E10	2000ST-062	SILL ANCHOR PLATE, 5" LONG AT JAMBS & 10" LONG AT STILE ENDS	6005-T5
E11	2000ST-063	SILL RETAINER ANCHOR CLIP	6005-T5
E12	2400ST-004	FIXED JAMB STILE	6063-T6
E13	2400ST-002	LOCK STILE	6063-T6
E14	2000ST-021	FRAME HEAD	6063-T5
E15	2000ST-038	DOOR SILL	6063-T6
E15.1	2000ST-031	ALT. DOOR SILL	6063-T6
E16	2000ST-003	FRAME JAMB	6063-T5
E17	2000ST-045	SNAP COVER FOR JAMBS	6063-T6

		MISCELANEOUS	
M1		Q 275 X 270 W/B @ (2400ST-012) (2400ST-019)	
M2	DC983	STRUCTURAL SILICONE	
M3		STAINLESS STEEL TRACK-- 304 GAUGE	
M4		MOCAP SMF 1/2" BLK PLASTIC PLUG FOR ROLLER WHEELS	
M5		3/4" X 1" X 1/8" THK. ALUMINUM TUBE AT STILE ENDS (LENGTH = 16" AT XO OR OX DOORS) (LENGTH = DOOR WIDTH-32" AT OXO/XOX OR OXXO DOORS)	
M6	W21225NK	ULTRAFAB FIN WEATHERING STRIP	
M7		8" ALUMINUM BAR	

		VINYLS	
V1	V-017	TPE GLAZING GASKET FOR 9/16" GLASS (DUROMETER 75±5 SHORE A)	
V2	V-059	OFFSET BULB VINYL	
V3	V-109	SR-900 COMPRESSION BULB	
V4	V-019	DRIP SILL VINYL, SOFT PVC (DUROMETER 65±5 SHORE A)	

		SCREWS	
S1		#14 X 1" LG. PH. SMS. ST/ST	
S2		#14 X 1" LG. FH. SDS ST/ST (AT 4" FROM ENDS AND 19" O.C.)	
S3		1/4-20 X 3/4" LG. SOCKET HEAD CAP SCREW ST/ST NONMAGN.	
S4		#10X1 1/2" LG. PH. SMS. ST/ST ASS. SC.FOR PANELS	
S6		#8 X 1/2" LG. PH. SMS. ST/ST	
S7		#10 X 3/4" LG. FH. SMS ST/ST FOR HARDWARE	
S8		#10 X 3/4" LG. PH. SMS ST/ST SCREW @ M1	
S9		#10 X 1" PH SMS, (4) SCREWS AT STILE ENDS @ 3" O.C.	
S10		#10X1 1/4" LG. PH. SMS. ST/ST	
S11		#14 X 1-1/2" LG. HH SELF DRILLING SCREWS, AT 2-1/2" O.C. MAX.	

		HARDWARE	
H1	PR01-1001	INTERLOCK SGD ROLLER W/ ST/ST WHEELS	
H2	PS01-0001-XXX	2 POINT KIT N/L	
H3	PS01-0002-XXX	2 POINT KIT EXTERIOR LOCKING	

PRODUCT REVISED
as complying with the Florida
Building Code
Acceptance No. 13-0513.03
Expiration Date 7-17-16
By
Miami-Dade Product Control

Engr: JAVAD AHMAD
CIVIL
FLA. PE # 70592
C.A.N. 3638

FEB 2 7 2013

AL-FAROOQ CORPORATION
ENGINEERS & PRODUCT DEVELOPMENT
1235 S.W. 87 AVE
MIAMI, FLORIDA 33174
TEL. (305) 264-8100 FAX. (305) 262-6978
COMP-ANL\W11-13RC

SERIES 2000ST ALUM SLIDING GLASS DOOR (L.M.I.)

R.C. ALUMINUM INDUSTRIES INC.
2805 N.W. 75 TH AVE.
MIAMI, FL. 33122
TEL. (305) 592-1515 FAX. (305) 592-2184

revisions:

no	date	by	description
A	06.09.11		REV. PER BNC COMMENTS
B	02.22.13		NO CHANGE THIS SHEET

date: 03-15-11
scale: 3/8" = 1"
dr. by: HAMID
chk. by:

drawing no.
W11-13

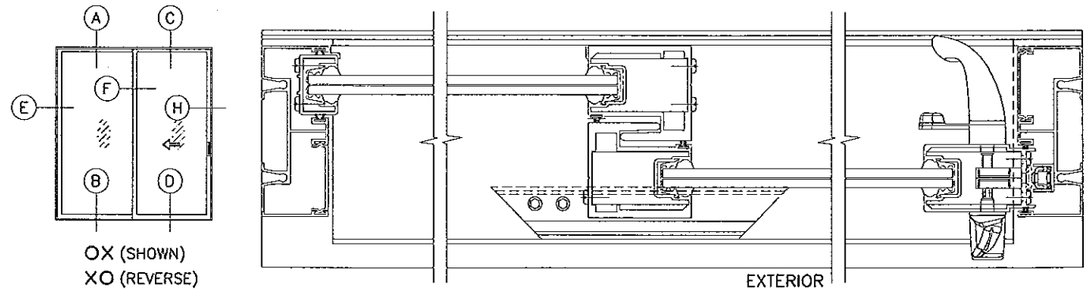

OX (SHOWN)
XO (REVERSE)

CONFIGURATIONS SHOWN FOR ILLUSTRATION PURPOSE ONLY
(SEE APPLICABLE SUBSTRATE INSTALLATION)

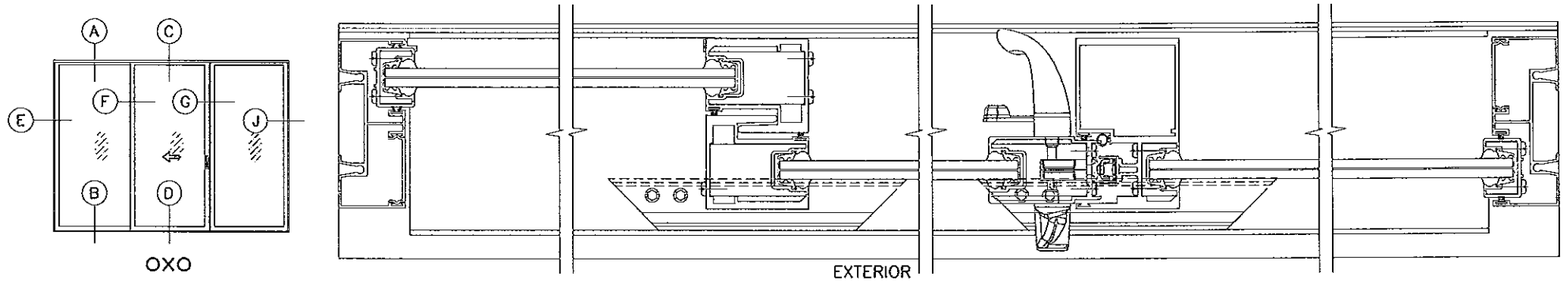

OXO

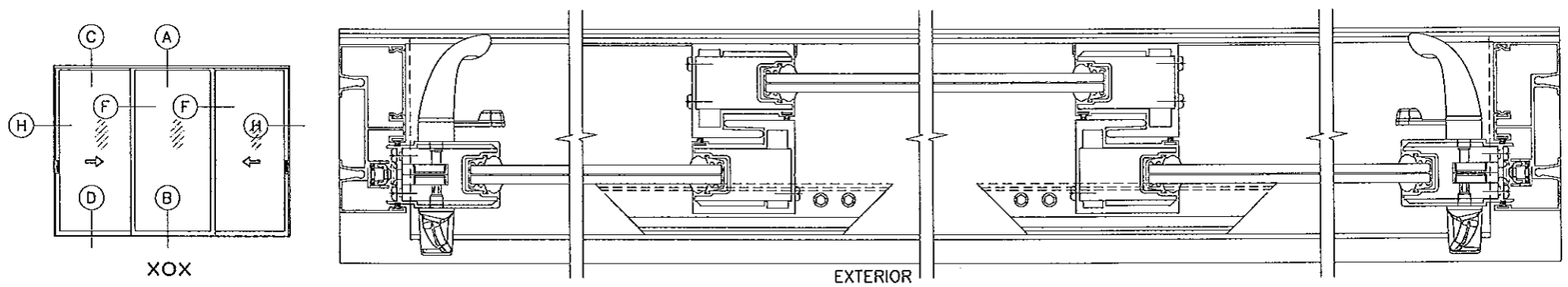

XOX

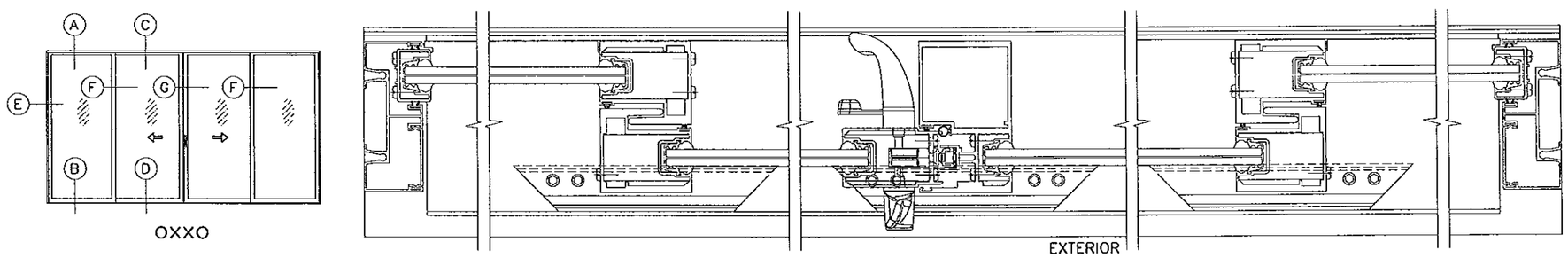

OXXO

APPROVED CONFIGURATIONS

PRODUCT REVISED
as complying with the Florida
Building Code
Acceptance No 13-0313.03
Expiration Date 7/17/17
By [illegible]
Miami Dade Product Control

Engr: JAVAD AHMAD
CIVIL
FLA. PE # 70592
C.A.N. 3538

FEB 21 2013

AL-FAROOQ CORPORATION
ENGINEERS & PRODUCT DEVELOPMENT
1235 S.W. 57 AVE
MIAMI, FLORIDA 33174
TEL. (305) 264-8100 FAX. (305) 262-6978

COMP-ANL\W11-13RC

SERIES 2000ST ALUM SLIDING GLASS DOOR (L.M.I.)

R.C. ALUMINUM INDUSTRIES INC.
2805 N.W. 75 TH AVE.
MIAMI, FL. 33122
TEL. (305) 592-1515 FAX. (305) 592-2184

revisions:

no	date	by	description
A	06.09.11		REV. PER BNC COMMENTS
B	02.22.13		NO CHANGE THIS SHEET

date: 03-15-11
scale: 3/8" = 1"
dr. by: HAMID
chk. by:

drawing no.
W11-13

sheet 4 of 9

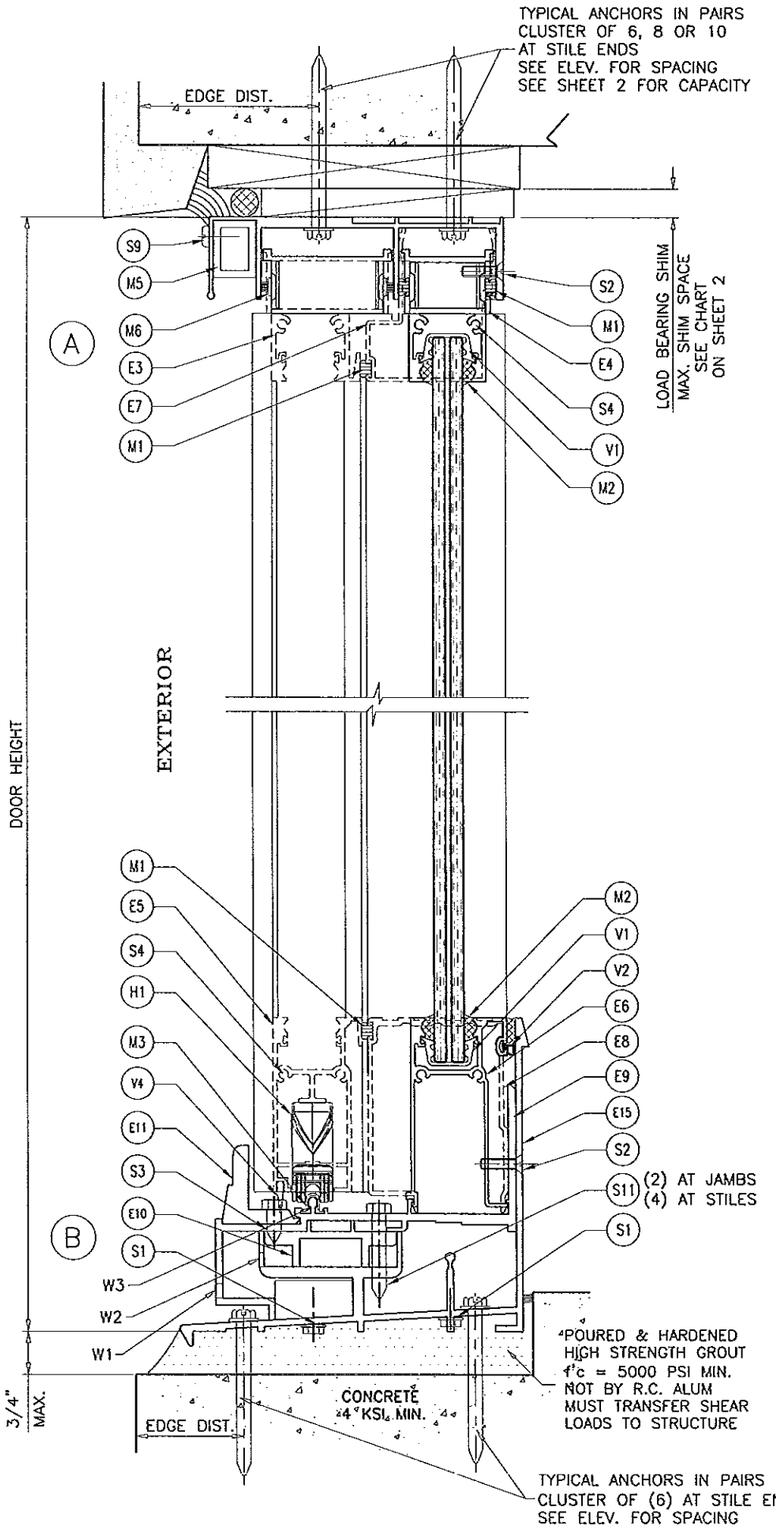

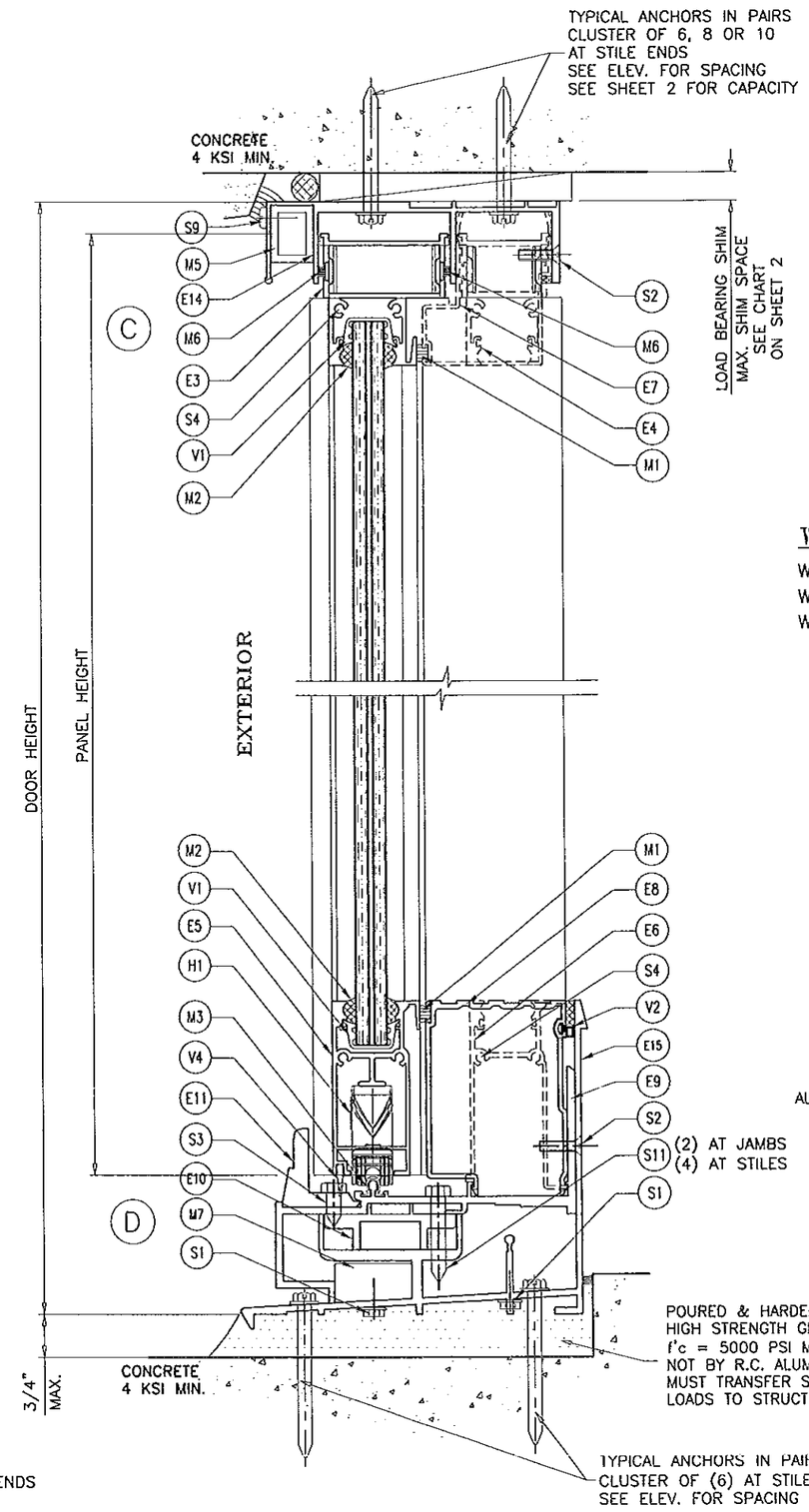

PRODUCT REVISED
as complying with the Florida
Building Code
Acceptance No. 13-0313.03
Expiration Date 7/17/14
By [illegible]
Miami-Dade Product Control

WEEPS:

W1 = 2" X 1/4" WEEP HOLE AT EACH END
W2 = 1" X 1/4" WEEP HOLE AT 2-1/2" FROM EACH END
W3 = 1" LONG WEEP NOTCH AT EACH PANEL TRACK

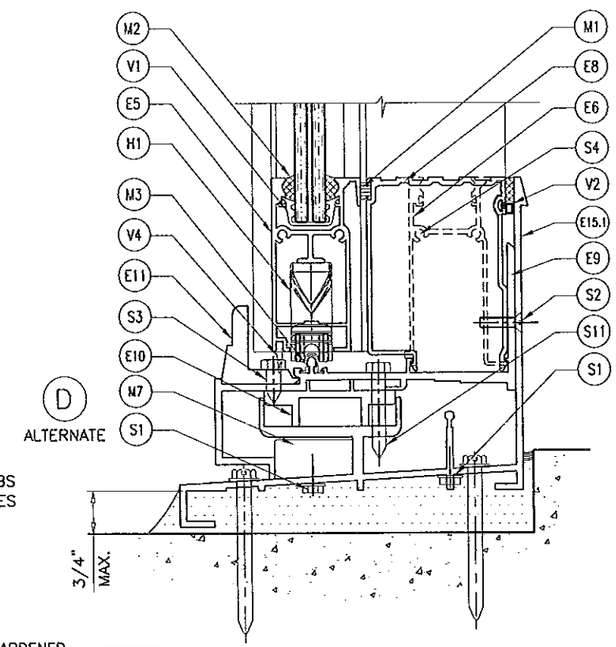

Engr: JAVAD AHMAD
CIVIL
FLA. PE # 70592
C.A.N. 3538

FEB 27 2013

AL-FAROOQ CORPORATION
ENGINEERS & PRODUCT DEVELOPMENT
1235 S.W. 57 AVE
MIAMI, FLORIDA 33174
TEL. (305) 264-8100 FAX. (305) 262-6978
COMP-ANL\W11-13RC

SERIES 2000ST ALUM SLIDING GLASS DOOR (L.M.I.)
R.C. ALUMINUM INDUSTRIES INC.
2805 N.W. 75 TH AVE.
MIAMI, FL. 33122
TEL. (305) 592-1515 FAX. (305) 592-2184

revisions:

no	date	by	description
A	06.09.11		REV. PER BNC COMMENTS
B	02.22.13		NO CHANGE THIS SHEET

date: 03-15-11
scale: 3/8" = 1"
dr. by: HAMID
chk. by:

drawing no.
W11-13

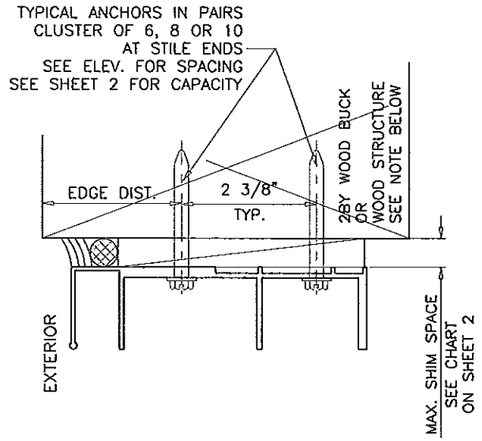

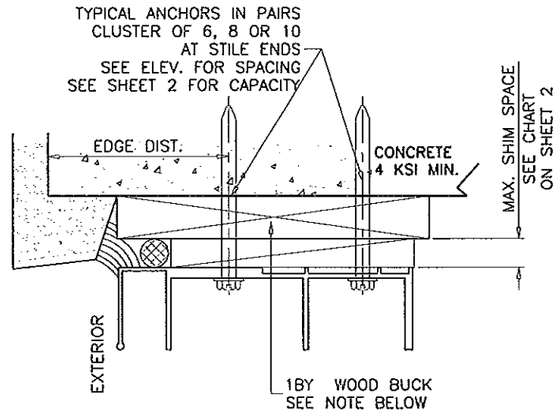

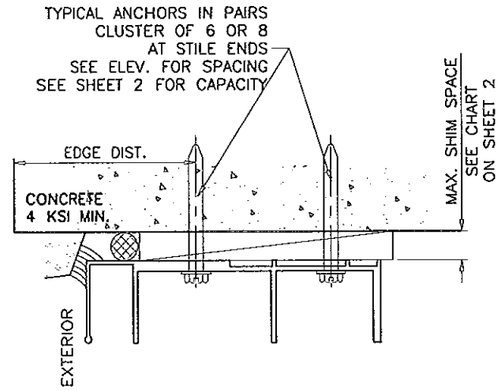

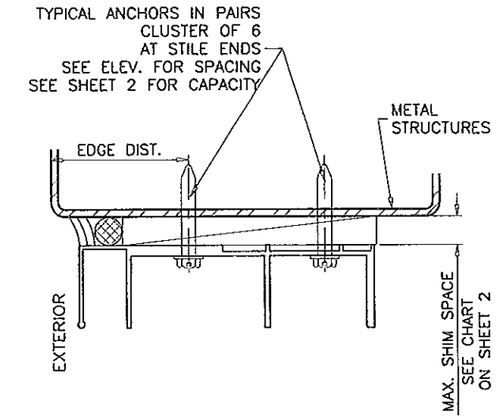

TYPICAL ANCHORS: SEE ELEV. FOR SPACING

— — — — AT HEAD — — — — — — — — — —

TYPE 'A'

1/4" DIA. HILTI KWIK-CON II (Fu=163 KSI, Fy=157 KSI)

INTO 2BY BUCKS OR WOOD STRUCTURES, 1-3/8" MIN. WOOD EMBEDMENT
THRU 1BY BUCKS INTO CONCRETE, 1-1/4" MIN. CONC. EMBEDMENT

TYPE 'B'

1/4" DIA. HILTI KWIK-CON II (Fu=163 KSI, Fy=157 KSI)

DIRECTLY INTO CONCRETE, 1-1/4" MIN. CONC. EMBED

TYPE 'C'

1/4" DIA. TEKS OR SELF DRILLING SCREWS (Fu=92 KSI, Fy=120 KSI)

INTO METAL STRUCTURES OR APPROVED CLIPPED MULLIONS

STEEL : 1/8" THK. MIN. (Fy = 36 KSI MIN.)
ALUMINUM : 1/8" THK. MIN. (6063-T5 MIN.)
(STEEL IN CONTACT WITH ALUMINUM TO BE PLATED OR PAINTED)

TYPE 'D' AT SILL

1/4" DIA HILTI KWIK-CON II (Fu=163 KSI, Fy=157 KSI)

DIRECTLY INTO CONCRETE, 1-1/4" MIN. CONCRETE EMBEDMENT

— — — — AT JAMBS — — — — — — — — — —

1/4" DIA. HILTI KWIK-CON II (Fu=163 KSI, Fy=157 KSI)

INTO 2BY BUCKS OR WOOD STRUCTURES, 1-3/8" MIN. WOOD EMBEDMENT
THRU 1BY BUCKS INTO CONC. OR MASONRY, 1-1/4" MIN. CONC. OR MASONRY EMBED.
DIRECTLY INTO CONC. OR MASONRY, 1-1/4" MIN. CONC. OR MASONRY EMBED

1/4" DIA. TEKS OR SELF DRILLING SCREWS (Fu=92 KSI, Fy=120 KSI)

INTO METAL STRUCTURES OR APPROVED CLIPPED MULLIONS

STEEL : 1/8" THK. MIN. (Fy = 36 KSI MIN.)
ALUMINUM : 1/8" THK. MIN. (6063-T5 MIN.)
(STEEL IN CONTACT WITH ALUMINUM TO BE PLATED OR PAINTED)

ANCHOR EDGE DISTANCES

INTO CONCRETE = 2" MIN. (AT HEAD/JAMB)
INTO CONCRETE = 2-1/2" MIN. (AT SILL)
INTO WOOD STRUCTURE = 1" MIN.
INTO METAL STRUCTURE = 3/4" MIN.

CONCRETE AT HEAD, SILL OR JAMBS f'c = 4000 PSI MIN.
C-90 HOLLOW/FILLED BLOCK AT JAMBS f'm = 1500 PSI MIN.

1BY OR 2BY WOOD BUCKS AND METAL STRUCTURES NOT BY RC ALUM MUST SUPPORT LOADS IMPOSED BY GLAZING SYSTEM AND TRANSFER THEM TO THE BUILDING STRUCTURE.

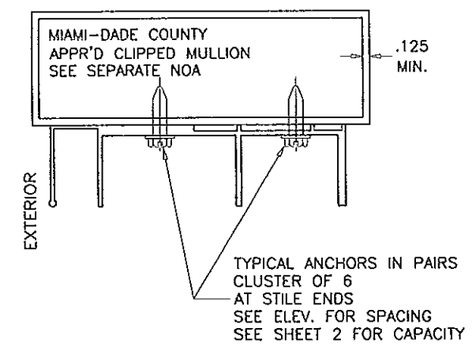

PRODUCT REVISED
as complying with the Florida Building Code
Acceptance No 13-203.13-03
Expiration Date 7-17-16
By
Miami Dade Product Control

Engr: JAVAD AHMAD
CIVIL
FLA. PE # 70592
C.A.N. 3538

FEB 27 2013

AL-FAROOQ CORPORATION
ENGINEERS & PRODUCT DEVELOPMENT
1235 S.W. 87 AVE
MIAMI, FLORIDA 33174
TEL. (305) 264-8100 FAX. (305) 262-6978
COMP-ANL\W11-13RC

SERIES 2000ST ALUM SLIDING GLASS DOOR (L.M.I.)

R.C. ALUMINUM INDUSTRIES INC.
2805 N.W. 75 TH AVE.
MIAMI, FL. 33122
TEL. (305) 592-1515 FAX. (305) 592-2184

revisions:

no	date	by	description
A	06.09.11		REV. PER BNC COMMENTS
B	02.22.13		NO CHANGE THIS SHEET

date: 03-15-11
scale: 3/8" = 1"
dr. by: HAMID
chk. by:

drawing no.
W11-13

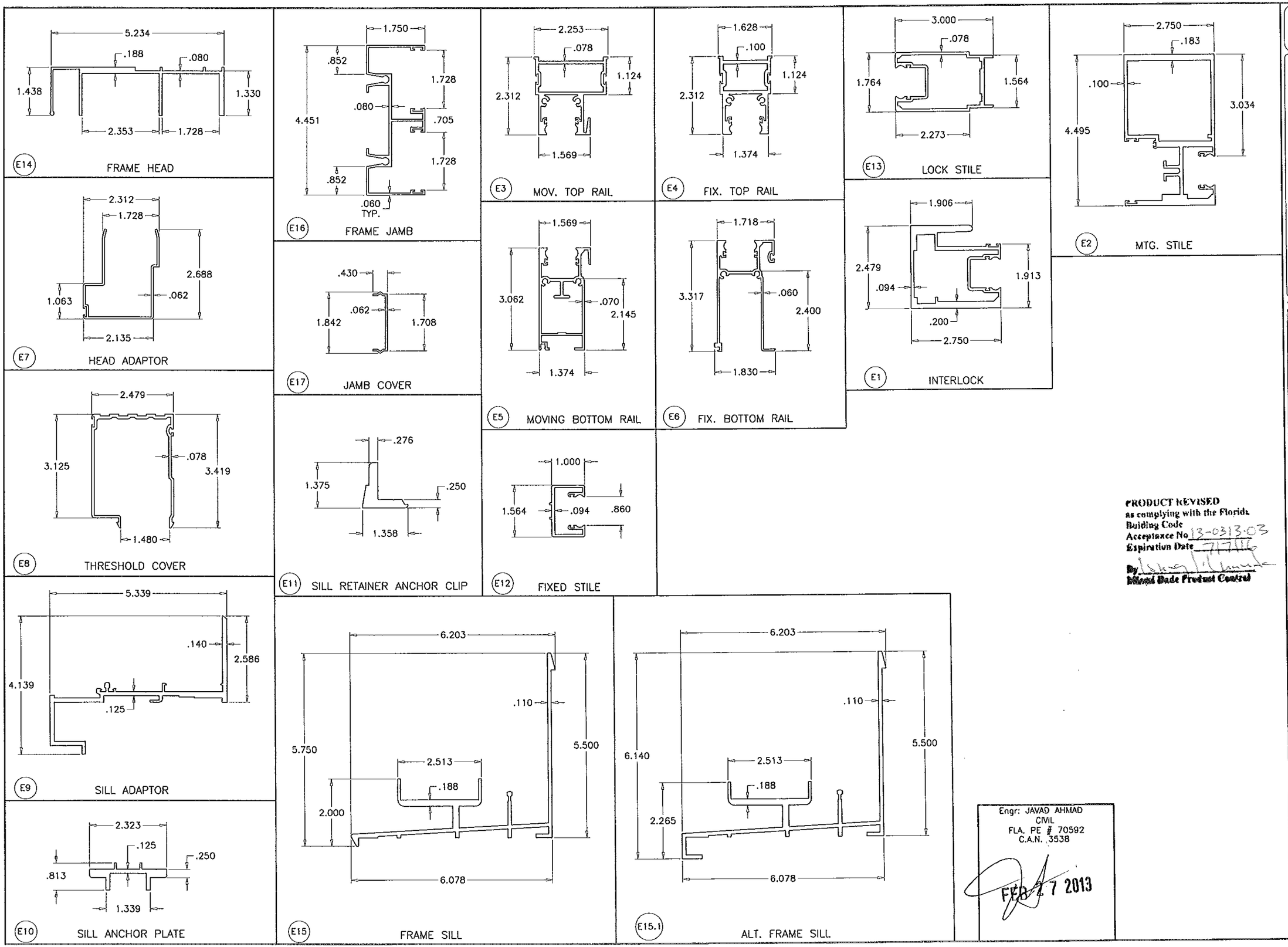

PRODUCT REVISED
as complying with the Florida
Building Code
Acceptance No 13-0313.03
Expiration Date 7/7/16
By
Miami Dade Product Control

Engr: JAVAD AHMAD
CIVIL
FLA. PE # 70592
C.A.N. 3538

FEB 27 2013

AL-FAROOQ CORPORATION
ENGINEERS & PRODUCT DEVELOPMENT
1235 S.W. 87 AVE
MIAMI, FLORIDA 33174
TEL. (305) 264-8100 FAX. (305) 262-6978
COMP-ANL\W11-13RC

SERIES 2000ST ALUM SLIDING GLASS DOOR (L.M.I.)

R.C. ALUMINUM INDUSTRIES INC.
2805 N.W. 75 TH AVE.
MIAMI, FL. 33122
TEL. (305) 592-1515 FAX. (305) 592-2184

revisions:

no	date	by	description
A	06.09.11		REV. PER BNC COMMENTS
B	02.22.13		NO CHANGE THIS SHEET

date: 03-15-11
scale: 3/8" = 1"
dr. by: HAMID
chk. by:

drawing no.
W11-13

sheet 8 of 9

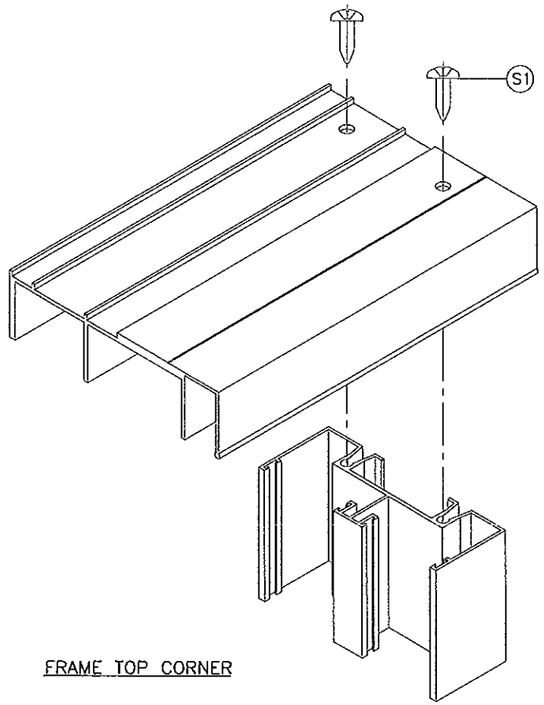

FRAME TOP CORNER

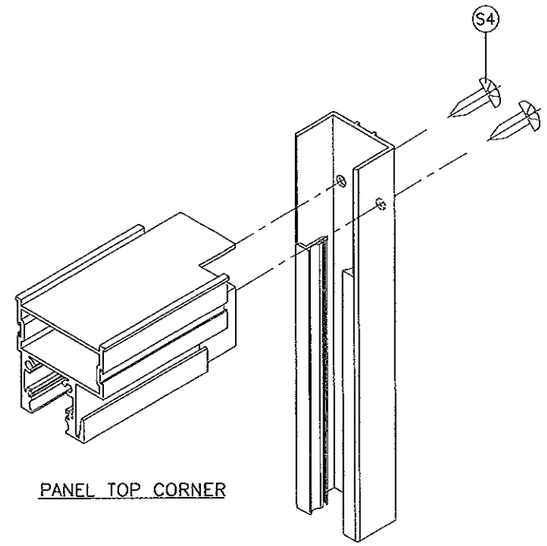

PANEL TOP CORNER

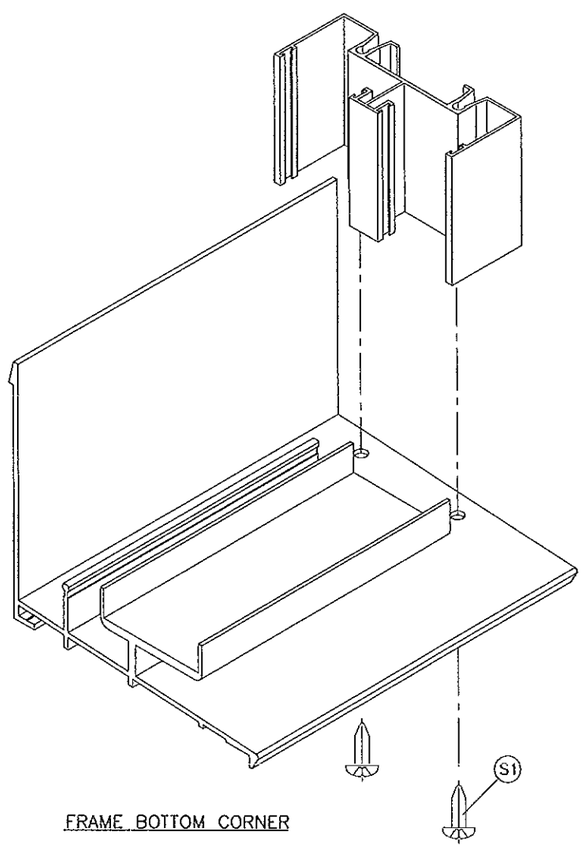

FRAME BOTTOM CORNER

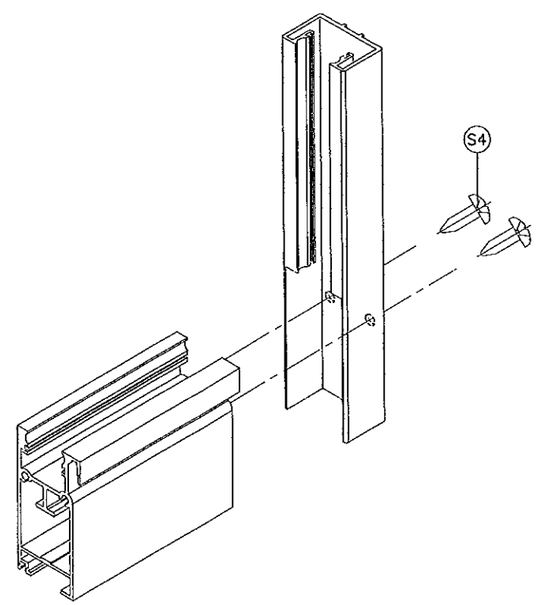

PANEL BOTTOM CORNER

PRODUCT REVISED
as complying with the Florida
Building Code
Acceptance No. 12-0313.03
Expiration Date July 07, 2016
By
Miami Dade Product Control

Engr: JAVAD AHMAD
CIVIL
FLA. PE # 70592
C.A.N. 3538

FEB 27 2013

AL-FAROOQ CORPORATION
ENGINEERS & PRODUCT DEVELOPMENT
1235 S.W. 87 AVE
MIAMI, FLORIDA 33174
TEL. (305) 264-8100 FAX. (305) 262-6978

COMP-ANL\W11-13RC

SERIES 2000ST ALUM SLIDING GLASS DOOR (L.M.I.)

R.C. ALUMINUM INDUSTRIES INC.
2805 N.W. 75 TH AVE.
MIAMI, FL. 33122
TEL. (305) 592-1515 FAX. (305) 592-2184

revisions:

no	date	by	description
A	06.09.11		NO CHANGE THIS SHEET
B	02.22.13		NO CHANGE THIS SHEET

date: 03-15-11
scale: 3/8" = 1"
dr. by: HAMID
chk. by:

drawing no.
W11-13

sheet 9 of 9