MIAMI-DADE COUNTY
DEPARTMENT OF REGULATORY AND ECONOMIC RESOURCES (RER)
BOARD AND CODE ADMINISTRATION DIVISION

MIAMI-DADE COUNTY
PRODUCT CONTROL SECTION
11805 SW 26 Street, Room 208
T (786) 315-2590 F (786) 315-2599
www.miamidade.gov/economy

NOTICE OF ACCEPTANCE (NOA)

WinDoor, Inc.
7500 Amsterdam Drive
Orlando, FL 32832

SCOPE:

This NOA is being issued under the applicable rules and regulations governing the use of construction materials. The documentation submitted has been reviewed and accepted by Miami-Dade County RER - Product Control Section to be used in Miami Dade County and other areas where allowed by the Authority Having Jurisdiction (AHJ).

This NOA shall not be valid after the expiration date stated below. The Miami-Dade County Product Control Section (In Miami Dade County) and/or the AHJ (in areas other than Miami Dade County) reserve the right to have this product or material tested for quality assurance purposes. If this product or material fails to perform in the accepted manner, the manufacturer will incur the expense of such testing and the AHJ may immediately revoke, modify, or suspend the use of such product or material within their jurisdiction. RER reserves the right to revoke this acceptance, if it is determined by Miami-Dade County Product Control Section that this product or material fails to meet the requirements of the applicable building code.

This product is approved as described herein, and has been designed to comply with the Florida Building Code, including the High Velocity Hurricane Zone.

DESCRIPTION: Series "V-100 Tilt-Turn" White PVC Dual Action Window – L.M.I.

APPROVAL DOCUMENT: Drawing No. **08-00991**, titled "Series V-100 PVC Dual Action Tilt-Turn Window – Large Missile Impact", sheets 1 through 23 of 23, dated 05/18/10, with revision B dated 01/22/13, prepared by manufacturer, signed and sealed by Luis R. Lomas, P.E., bearing the Miami-Dade County Product Control Revision stamp with the Notice of Acceptance number and expiration date by the Miami-Dade County Product Control Section.

MISSILE IMPACT RATING: Large and Small Missile Impact Resistant

LABELING: Each unit shall bear a permanent label with the manufacturer's name or logo, city, state, model/series, and following statement: "Miami-Dade County Product Control Approved", unless otherwise noted herein.

RENEWAL of this NOA shall be considered after a renewal application has been filed and there has been no change in the applicable building code negatively affecting the performance of this product.

TERMINATION of this NOA will occur after the expiration date or if there has been a revision or change in the materials, use, and/or manufacture of the product or process. Misuse of this NOA as an endorsement of any product, for sales, advertising or any other purposes shall automatically terminate this NOA. Failure to comply with any section of this NOA shall be cause for termination and removal of NOA.

ADVERTISEMENT: The NOA number preceded by the words Miami-Dade County, Florida, and followed by the expiration date may be displayed in advertising literature. If any portion of the NOA is displayed, then it shall be done in its entirety.

INSPECTION: A copy of this entire NOA shall be provided to the user by the manufacturer or its distributors and shall be available for inspection at the job site at the request of the Building Official.

This NOA **revises NOA# 12-0130.17** and consists of this page 1 and evidence pages E-1 and E-2, as well as approval document mentioned above.

The submitted documentation was reviewed by **Manuel Perez, P.E.**

MIAMI-DADE COUNTY APPROVED

9/3/13

WinDoor, Inc.

NOTICE OF ACCEPTANCE: EVIDENCE SUBMITTED

A. DRAWINGS

1. Manufacturer's die drawings and sections.
2. Drawing No **08-00991**, Sheets 1 through 23 of 23, titled "Series V-100 PVC Dual Action Tilt-Turn Window – Large Missile Impact", dated 05/18/10, with revision B dated 01/22/13, prepared by manufacturer, signed and sealed by Luis R. Lomas, P.E.

B. TESTS

1. Test reports on: 1) Air Infiltration Test, per FBC, TAS 202-94
   2) Uniform Static Air Pressure Test, Loading per FBC TAS 202-94
   3) Water Resistance Test, per FBC, TAS 202-94
   4) Large Missile Impact Test per FBC, TAS 201-94
   5) Cyclic Wind Pressure Loading per FBC, TAS 203-94
   6) Forced Entry Test, per FBC 2411 3.2.1, TAS 202-94

   along with marked-up drawings and installation diagram of: series V100 tilt and turn PVC windows, prepared by National Certified Testing Laboratories, Test Report No. **NCTL-210-3658-10** dated 10/25/12, signed and sealed by Gerard J. Ferrara, P.E.
2. Test reports on: 1) Air Infiltration Test, per FBC, TAS 202-94
   2) Uniform Static Air Pressure Test, Loading per FBC TAS 202-94
   3) Water Resistance Test, per FBC, TAS 202-94
   4) Large Missile Impact Test per FBC, TAS 201-94
   5) Cyclic Wind Pressure Loading per FBC, TAS 203-94
   6) Forced Entry Test, per FBC 2411 3.2.1, TAS 202-94

   along with marked-up drawings and installation diagram of: series V100 tilt and turn PVC windows, prepared by National Certified Testing Laboratories, Test Report No. **NCTL-210-3658-1**, dated 01/19/10, signed and sealed by Gerard J. Ferrara, P.E. ***(Submitted under NOA No. 10–0628.01)***

C. CALCULATIONS

1. Anchor verification calculations and structural analysis, complying with FBC-2010, dated 05/18/10, and 01/24/13, prepared, signed and sealed by Luis R. Lomas, P.E. ***(Submitted partially under previous NOA No. 12–0130.17)***
2. Glazing complies with ASTM E1300-04

D. QUALITY ASSURANCE

1. Miami-Dade Department of Regulatory and Economic Resources (RER)

Manuel Perez, P.E.
Product Control Examiner
NOA No. 13-0321. 10
Expiration Date: November 24, 2015
Approval Date: September 12, 2013

NOTICE OF ACCEPTANCE: EVIDENCE SUBMITTED

E. MATERIAL CERTIFICATIONS

1. Notice of Acceptance No. **11–0624.02** issued to **E.I. DuPont DeNemours & Co.**, Inc. for their "**DuPont SentryGlas® Interlayer**" dated 08/25/11, expiring on 01/14/17.
2. Notice of Acceptance No. **12-0106.01** issued to VEKA, Inc. for their "**White Rigid PVC Exterior Extrusions for Windows and Doors**" dated 08/09/12, expiring on 03/04/17.

F. STATEMENTS

1. Statement letter of conformance, complying with FBC-2010, and of no financial interest, dated January 24, 2013, signed and sealed by Luis R. Lomas, P.E.
2. Laboratory compliance letter for Test Report No. **NCTL-210-3658-1**, issued by National Certified Testing Laboratories, dated 06/07/10, signed and sealed by Gerard J. Ferrara, P.E.
   (Submitted under previous NOA#10-0628.01)

G. OTHER

1. Notice of Acceptance No. **12-0130.17**, issued to WinDoor, Inc. for their Series "V-100 Tilt-Turn" White PVC Dual Action Window – L.M.I., approved on 04/05/12 and expiring on 11/24/15.

Manuel Perez, P.E.
Product Control Examiner
NOA No. 13-0321. 10
Expiration Date: November 24, 2015
Approval Date: September 12, 2013

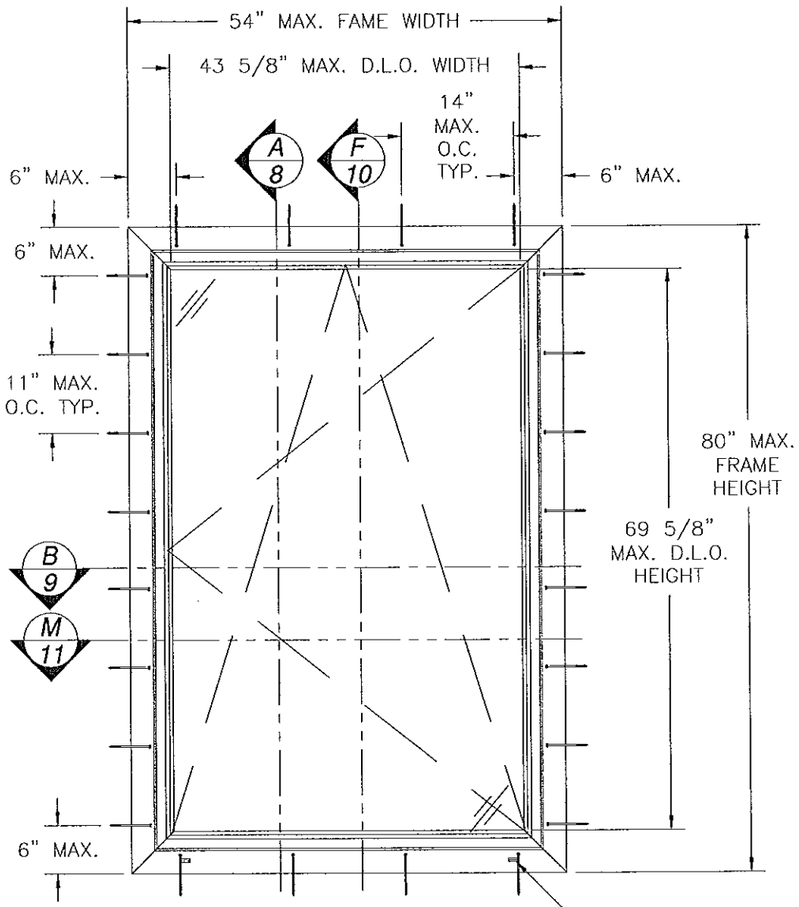

SERIES V-100 PVC DUAL ACTION TILT-TURN WINDOW FULL LITE

EXTERIOR VIEW

DESIGN PRESSURE RATING	*IMPACT RATING*
+ 100.0 PSF *- 130.0 PSF*	*LARGE MISSILE IMPACT*

FRAME & SASH WITH ALUMINUM OR STEEL REINFORCEMENT

REVISIONS			
REV	DESCRIPTION	DATE	APPROVED
A	PER DADE LETTER DATED OCT. 4, 2010	10/07/10	R.L.
B	ADDED ALUMINUM REINFORCED OPTION	01/22/13	R.L.

NOTES:

1) THE PRODUCT SHOWN HEREIN IS DESIGNED AND MANUFACTURED TO COMPLY WITH REQUIREMENTS OF THE FLORIDA BUILDING CODE INCLUDING THE HVHZ.
2) WOOD FRAMING, 2X BACKED STEEL FRAMING AND MASONRY OPENING TO BE DESIGNED AND ANCHORED TO PROPERLY TRANSFER ALL LOADS TO STRUCTURE. FRAMING AND MASONRY OPENING IS THE RESPONSIBILITY OF THE ARCHITECT OR ENGINEER OF RECORD.
3) 1X BUCK OVER MASONRY/CONCRETE IS OPTIONAL. WHERE 1X BUCK IS NOT USED DISSIMILAR MATERIALS MUST BE SEPARATED WITH APPROVED COATING OR MEMBRANE. SEPARATION OF DISSIMILAR MATERIALS IS THE RESPONSIBILITY OF THE ARCHITECT OR ENGINEER OF RECORD.
4) ALLOWABLE STRESS INCREASE OF 1/3 WAS NOT USED IN THE DESIGN OF THE PRODUCT SHOWN HEREIN. WIND LOAD DURATION FACTOR Cd=1.6 WAS USED FOR WOOD ANCHOR CALCULATIONS.
5) FRAME AND SASH MATERIAL: WHITE EXTRUDED RIGID PVC.
6) UNITS MUST BE GLAZED PER ASTM E1300-04, SEE SHEET 12 FOR GLAZING DETAILS.
7) APPROVED IMPACT PROTECTIVE SYSTEM <u>IS NOT REQUIRED</u> FOR THIS PRODUCT IN WIND BORNE DEBRIS REGIONS.
8) SHIM AS REQUIRED AT EACH INSTALLATION ANCHOR WITH LOAD BEARING SHIM. SHIM WHERE SPACE OF 1/16" OR GREATER OCCURS. MAXIMUM ALLOWABLE SHIM STACK TO BE 1/4".
9) FOR ANCHORING INTO MASONRY USE 1/4" ELCO CRETE-FLEX TAPCONS WITH SUFFICIENT LENGTH TO ACHIEVE A 1 1/4" MINIMUM EMBEDMENT INTO SUBSTRATE WITH 2 1/2" MINIMUM EDGE DISTANCE. LOCATE ANCHORS AS SHOWN IN ELEVATIONS AND INSTALLATION DETAILS.
10) FOR ANCHORING INTO 2X WOOD FRAMING OR 2X BUCK OR 2X BACKED 16GA. STEEL FRAMING USE #14 WOOD SCREW WITH SUFFICIENT LENGTH TO ACHIEVE A 1 7/16" MINIMUM EMBEDMENT INTO SUBSTRATE. LOCATE ANCHORS AS SHOWN IN ELEVATIONS AND INSTALLATION DETAILS.
11) ALL FASTENERS TO BE CORROSION RESISTANT.
12) INSTALLATION ANCHORS SHALL BE INSTALLED IN ACCORDANCE WITH ANCHOR MANUFACTURER'S INSTALLATION INSTRUCTIONS, AND ANCHORS SHALL NOT BE USED IN SUBSTRATES WITH STRENGTHS LESS THAN THE MINIMUM STRENGTH SPECIFIED BELOW:
    A. WOOD - MINIMUM SPECIFIC GRAVITY OF G=0.42
    B. CONCRETE - MINIMUM COMPRESSIVE STRENGTH OF 3,192 PSI.
    C. MASONRY - STRENGTH CONFORMANCE TO ASTM C-90, GRADE N, TYPE 1 (OR GREATER).
    D. STEEL FRAMING: 2X BACKED 16GA. (.060" MIN.) STEEL FRAMING.
13) MAXIMUM SASH SIZE: 50" x 76".

SIGNED: 02/18/2013

TABLE OF CONTENTS

SHEET NO.	DESCRIPTION
1 - 7	ELEVATION, ANCHORING LAYOUT AND NOTES
8 - 11	BILL OF MATERIALS AND CROSS SECTIONS
12	CORNER CONSTRUCTION AND GLAZING DETAILS
13 - 17	INSTALLATION DETAILS
18	COMPONENTS
19 - 23	HARDWARE LAYOUTS

PRODUCT REVISED
as complying with the Florida Building Code
Acceptance No 13-0321.10
Expiration Date Nov. 24, 2015
By Manuel Perez
Miami Dade Product Control

WinDoor INCORPORATED
7500 AMSTERDAM DRIVE
ORLANDO, FL 32832
Phone: 407.481.8400
Fax: 407.481.0505
www.windoorinc.com

SERIES V-100 PVC DUAL ACTION TILT-TURN WINDOW - LARGE MISSILE IMPACT
ELEVATION, ANCHORING LAYOUT AND NOTES

DRAWN:	DWG NO.	REV
TJH	08-00991	B
SCALE NTS	DATE 05/18/10	SHEET 1 OF 23

LUIS R. LOMAS LICENSE No. 6251 STATE OF FLORIDA PROFESSIONAL ENGINEER

REVISIONS			
REV	DESCRIPTION	DATE	APPROVED
A	PER DADE LETTER DATED OCT. 4, 2010	10/07/10	R.L.
B	ADDED ALUMINUM REINFORCED OPTION	01/22/13	R.L.

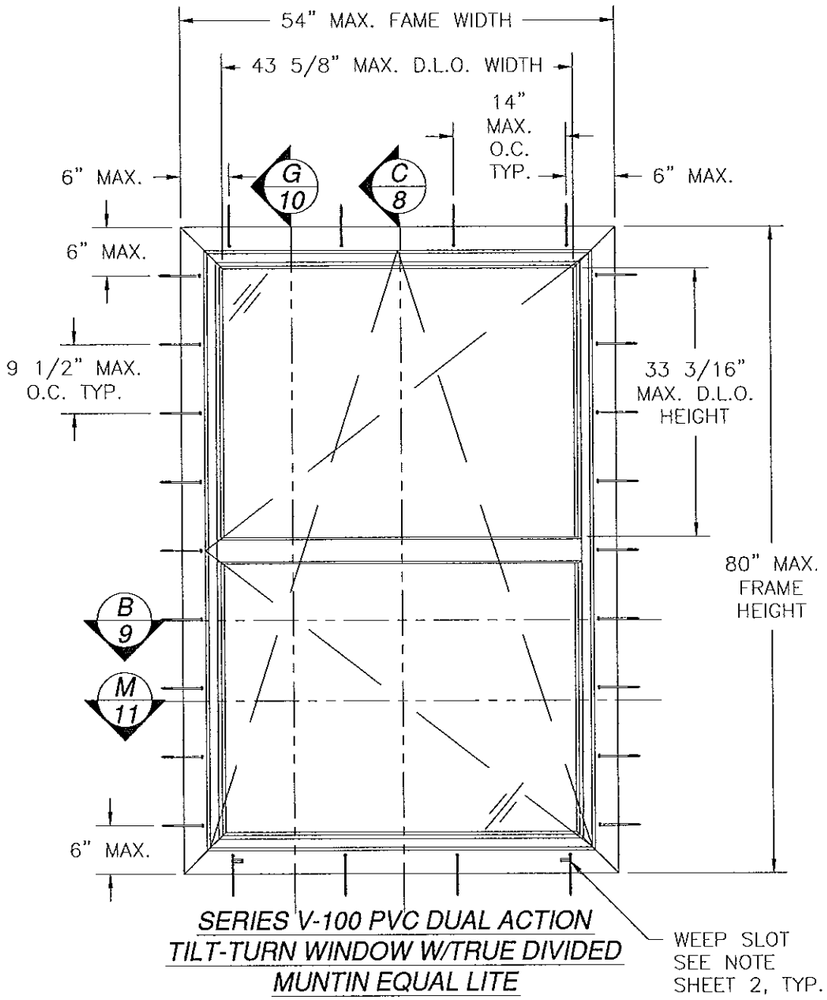

SERIES V-100 PVC DUAL ACTION TILT-TURN WINDOW W/TRUE DIVIDED MUNTIN EQUAL LITE

EXTERIOR VIEW

DESIGN PRESSURE RATING	IMPACT RATING
+ 100.0 PSF - 130.0 PSF	LARGE MISSILE IMPACT

FRAME, SASH & MULLION WITH ALUMINUM OR STEEL REINFORCEMENT

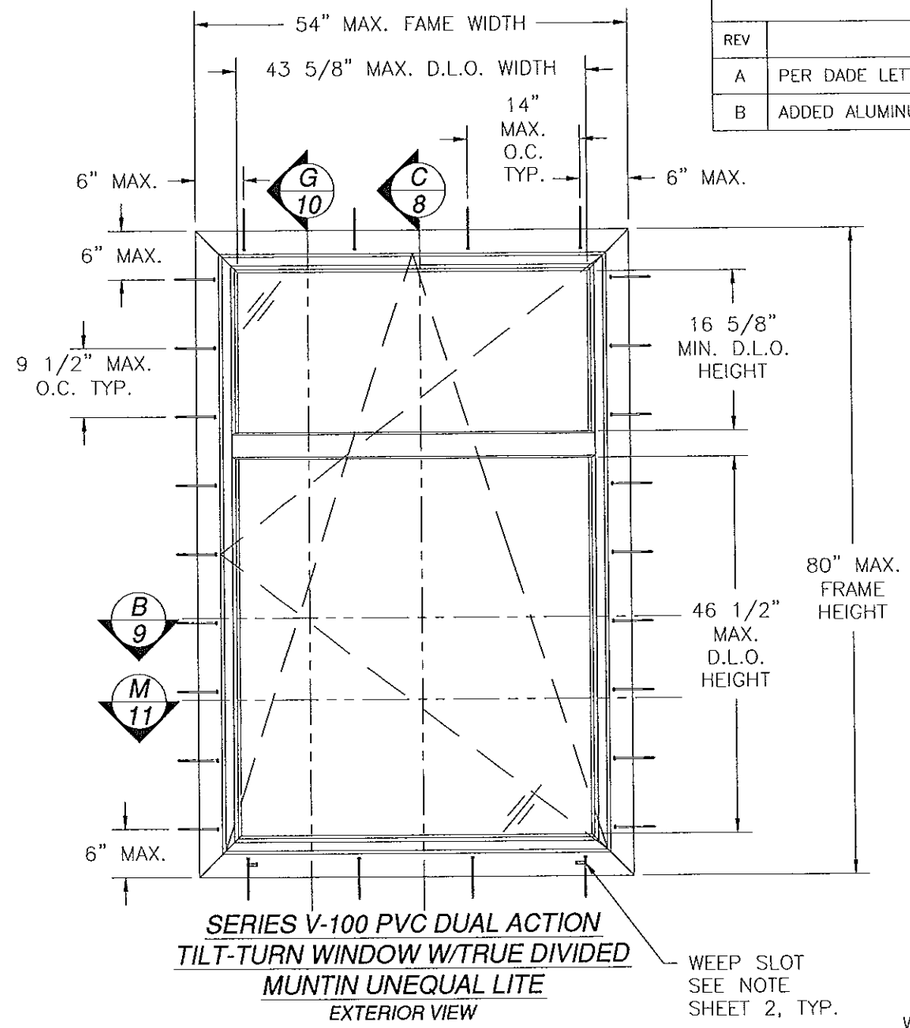

SERIES V-100 PVC DUAL ACTION TILT-TURN WINDOW W/TRUE DIVIDED MUNTIN UNEQUAL LITE

EXTERIOR VIEW

DESIGN PRESSURE RATING	IMPACT RATING
+ 100.0 PSF - 130.0 PSF	LARGE MISSILE IMPACT

FRAME, SASH & MULLION WITH ALUMINUM OR STEEL REINFORCEMENT

WEEP SLOT NOTE:
WEEP SLOT IN FRAME MEASURES 1 1/8" WIDE x 3/16" HIGH. WEEP SLOTS ARE LOCATED 6" IN AND 1 7/16" UP FROM EACH CORNER OF THE SILL. WEEP SLOTS ARE FITTED WITH A WEEP COVER, BILL OF MATERIALS ITEM #22.

SIGNED: 02/18/2013

PRODUCT REVISED
as complying with the Florida Building Code
Acceptance No 13-0322.10
Expiration Date Nov. 24, 2015
By Manuel Perez
Miami Dade Product Control

WinDoor INCORPORATED
7500 AMSTERDAM DRIVE
ORLANDO, FL 32832
Phone: 407.481.8400
Fax: 407.481.0505
www.windoorinc.com

SERIES V-100 PVC DUAL ACTION TILT-TURN WINDOW – LARGE MISSILE IMPACT ELEVATIONS AND ANCHORING LAYOUTS

DRAWN:	DWG NO.	REV
TJH	08-00991	B

SCALE	DATE	SHEET
NTS	05/18/10	2 OF 23

LUIS R. LOMAS LICENSE No. 62514 STATE OF FLORIDA PROFESSIONAL ENGINEER

REVISIONS			
REV	DESCRIPTION	DATE	APPROVED
A	PER DADE LETTER DATED OCT. 4, 2010	10/07/10	R.L.
B	ADDED ALUMINUM REINFORCED OPTION	01/22/13	R.L.

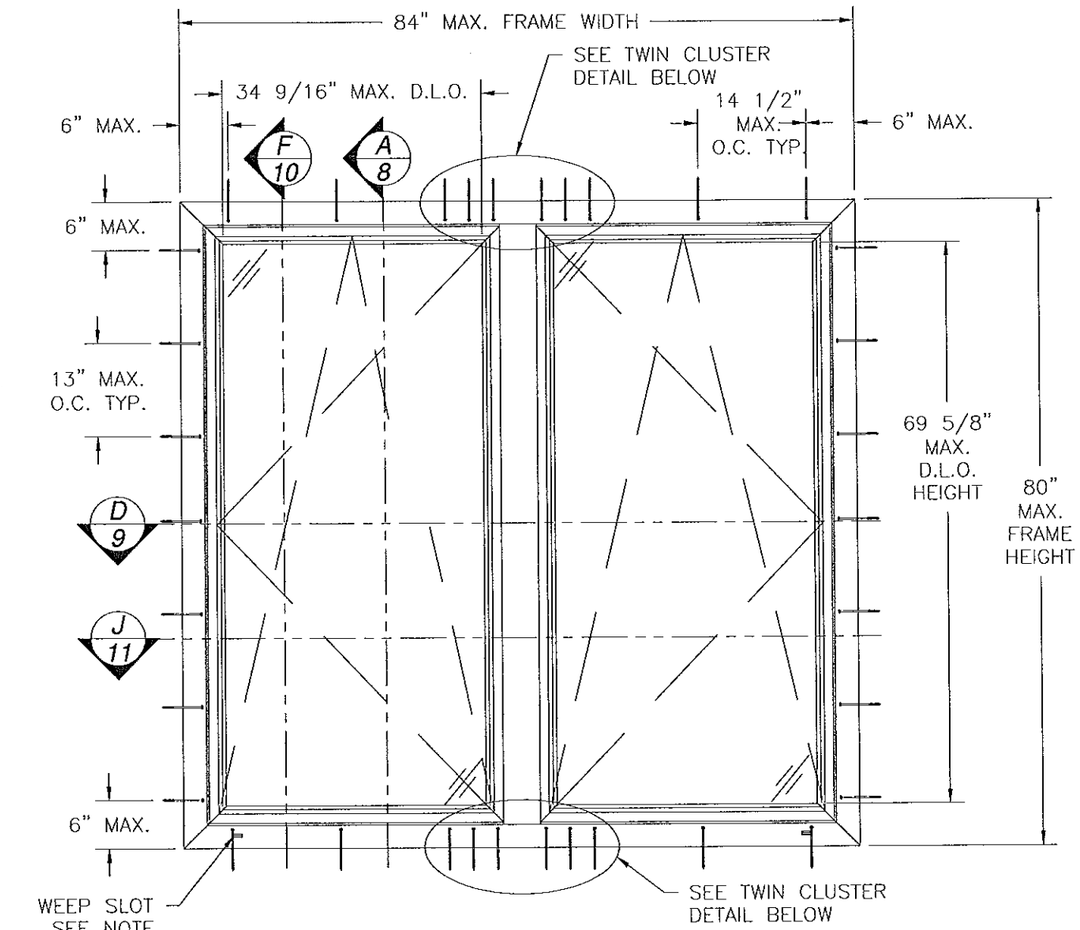

SERIES V-100 PVC DUAL ACTION TILT-TURN TWIN WINDOW FULL LITE

EXTERIOR VIEW

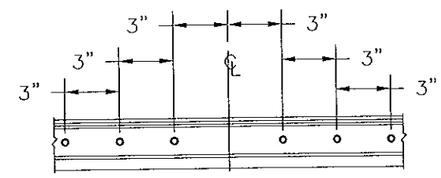

TWIN CLUSTER DETAIL

TYPICAL HEAD AND SILL

DESIGN PRESSURE RATING	IMPACT RATING
+ 100.0 PSF - 130.0 PSF	LARGE MISSILE IMPACT

FRAME, SASH & POST WITH STEEL REINFORCEMENT

DESIGN PRESSURE RATING	IMPACT RATING
±75.0PSF	LARGE MISSILE IMPACT

FRAME & SASH WITH ALUMINUM REINFORCEMENT POST WITH STEEL REINFORCEMENT

NOTES:

1) TWIN UNIT MAY CONTAIN A COMBINATION OF EQUAL AND/OR UNEQUAL LITES.
2) EQUAL LITE MAXIMUM D.L.O. SIZE: 34 9/16" x 33 3/16".
3) UNEQUAL LITE MINIMUM D.L.O. SIZE: 32 1/2" x 19 3/4".
4) UNEQUAL LITE MAXIMUM D.L.O. SIZE: 32 1/2" x 46 1/2".
5) MAXIMUM SINGLE SASH SIZE: 38 3/4" x 76".

SIGNED: 02/18/2013

PRODUCT REVISED
as complying with the Florida Building Code
Acceptance No 13-0324.10
Expiration Date Nov. 24, 2015
By Manuel Perez
Miami/Dade Product Control

WinDoor INCORPORATED
7500 AMSTERDAM DRIVE
ORLANDO, FL 32832
Phone: 407.481.8400
Fax: 407.481.0505
www.windoorinc.com

SERIES V-100 PVC DUAL ACTION TILT-TURN WINDOW – LARGE MISSILE IMPACT ELEVATIONS AND ANCHORING LAYOUTS

DRAWN:	DWG NO.	REV
TJH	08-00991	B
SCALE NTS	DATE 05/18/10	SHEET 3 OF 23

LUIS R. LOMAS LICENSE No. 62514 STATE OF FLORIDA PROFESSIONAL ENGINEER

REVISIONS			
REV	DESCRIPTION	DATE	APPROVED
A	PER DADE LETTER DATED OCT. 4, 2010	10/07/10	R.L.
B	ADDED ALUMINUM REINFORCED OPTION	01/22/13	R.L.

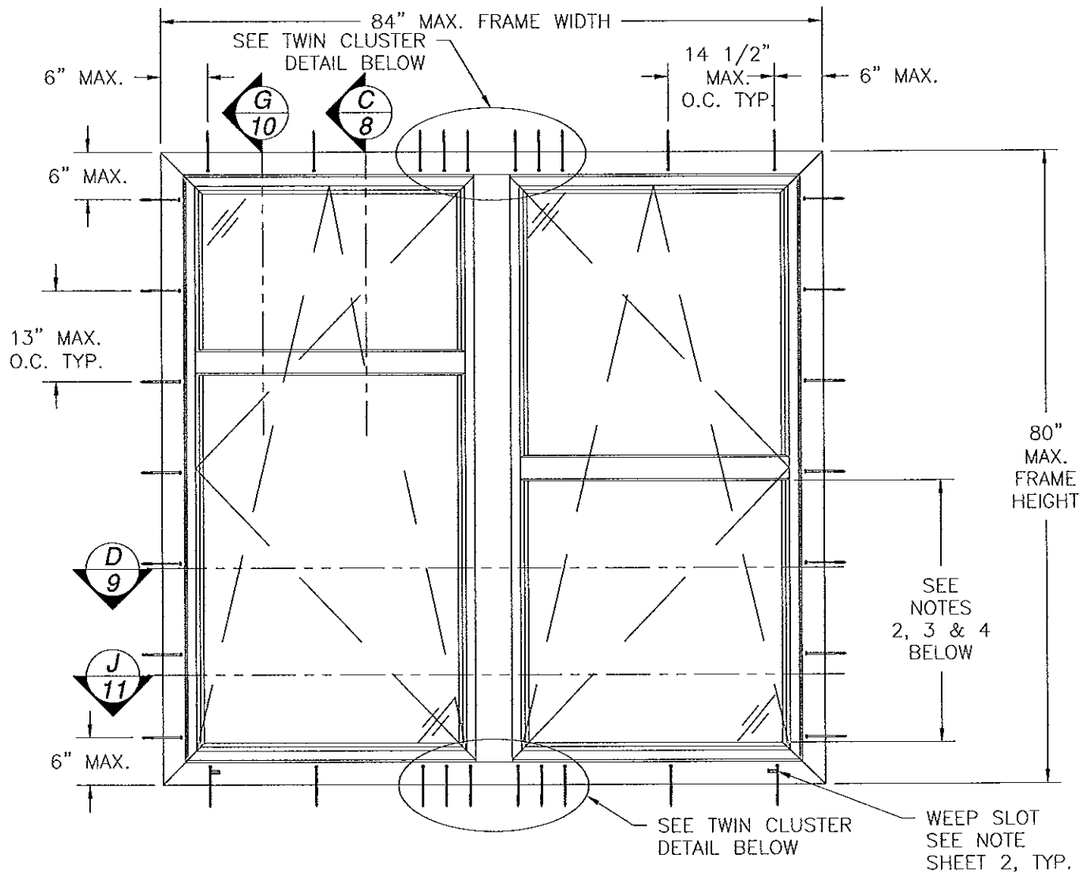

SERIES V-100 PVC DUAL ACTION TILT-TURN TWIN WINDOW W/TRUE DIVIDED MUNTIN UNEQUAL AND EQUAL LITE

EXTERIOR VIEW

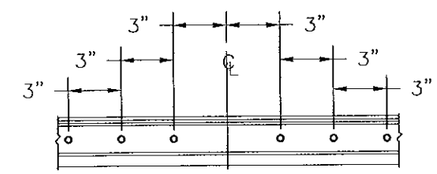

TWIN CLUSTER DETAIL

TYPICAL HEAD AND SILL

DESIGN PRESSURE RATING	IMPACT RATING
+ 100.0 PSF - 130.0 PSF	LARGE MISSILE IMPACT

FRAME, SASH, POST & MULLION WITH STEEL REINFORCEMENT

DESIGN PRESSURE RATING	IMPACT RATING
±75.0PSF	LARGE MISSILE IMPACT

FRAME, SASH & MULLION WITH ALUMINUM REINFORCEMENT POST WITH STEEL REINFORCEMENT.

SIGNED: 02/18/2013

NOTES:

1) TWIN UNIT MAY CONTAIN A COMBINATION OF EQUAL AND/OR UNEQUAL LITES.
2) EQUAL LITE MAXIMUM D.L.O. SIZE: 34 9/16" x 33 3/16".
3) UNEQUAL LITE MINIMUM D.L.O. SIZE: 32 1/2" x 19 3/4".
4) UNEQUAL LITE MAXIMUM D.L.O. SIZE: 32 1/2" x 46 1/2".
5) MAXIMUM SINGLE SASH SIZE: 38 3/4" x 76".

PRODUCT REVISED
as complying with the Florida Building Code
Acceptance No 13-0321.10
Expiration Date Nov 24, 2015
By Miami-Dade Product Control

WinDoor INCORPORATED
7500 AMSTERDAM DRIVE
ORLANDO, FL 32832
Phone: 407.481.8400
Fax: 407.481.0505
www.windoorinc.com

SERIES V-100 PVC DUAL ACTION TILT-TURN WINDOW – LARGE MISSILE IMPACT ELEVATIONS AND ANCHORING LAYOUTS

DRAWN: TJH	DWG NO. 08-00991	REV B
SCALE NTS	DATE 05/18/10	SHEET 4 OF 23

LUIS R. LOMAS LICENSE No. 62514 STATE OF FLORIDA PROFESSIONAL ENGINEER

REVISIONS			
REV	DESCRIPTION	DATE	APPROVED
A	PER DADE LETTER DATED OCT. 4, 2010	10/07/10	R.L.
B	ADDED ALUMINUM REINFORCED OPTION	01/22/13	R.L.

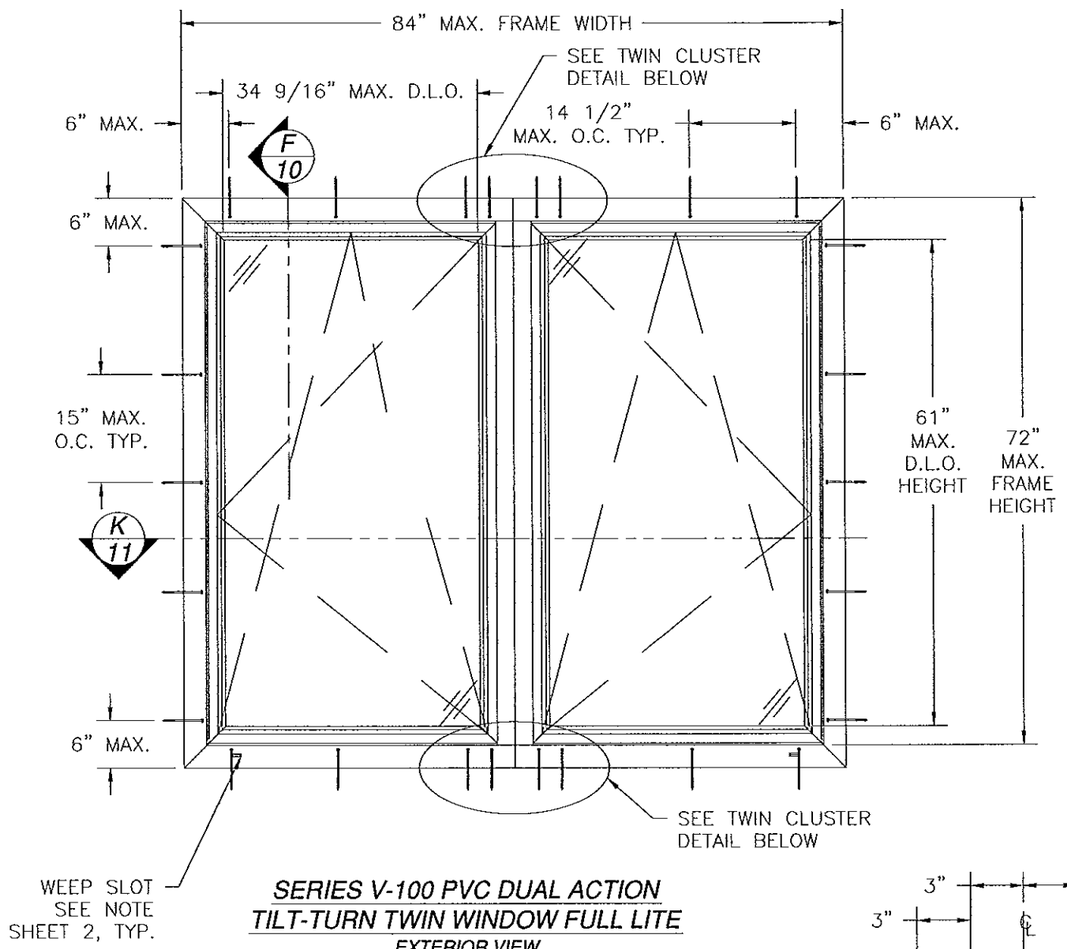

SERIES V-100 PVC DUAL ACTION TILT-TURN TWIN WINDOW FULL LITE

EXTERIOR VIEW

DESIGN PRESSURE RATING	IMPACT RATING
±65.0PSF	LARGE MISSILE IMPACT

FRAME, SASH & POST WITH ALUMINUM REINFORCEMENT

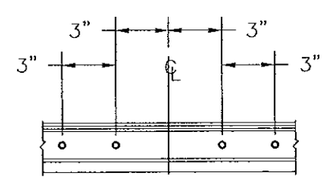

TWIN CLUSTER DETAIL

TYPICAL HEAD AND SILL

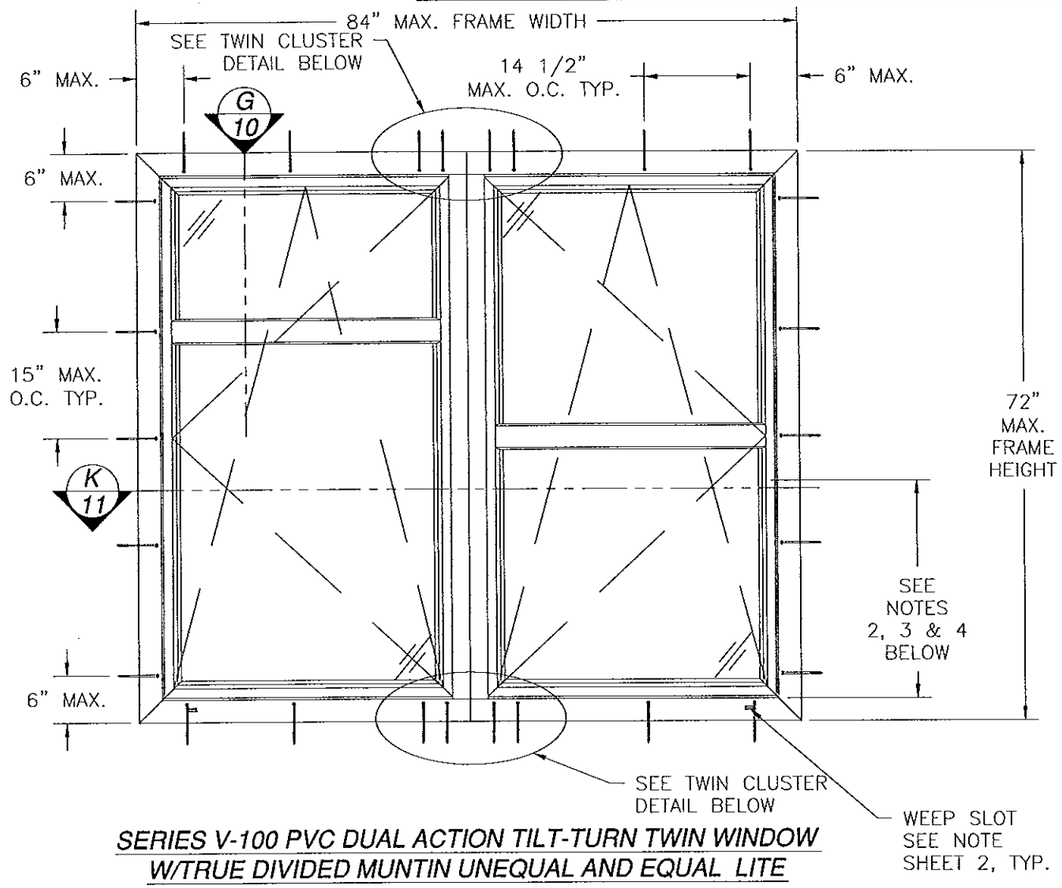

SERIES V-100 PVC DUAL ACTION TILT-TURN TWIN WINDOW W/TRUE DIVIDED MUNTIN UNEQUAL AND EQUAL LITE

EXTERIOR VIEW

DESIGN PRESSURE RATING	IMPACT RATING
±65.0PSF	LARGE MISSILE IMPACT

FRAME, SASH, POST & MULLION WITH ALUMINUM REINFORCEMENT

SIGNED: 02/18/2013

NOTES:

1) TWIN UNIT MAY CONTAIN A COMBINATION OF EQUAL AND/OR UNEQUAL LITES.
2) EQUAL LITE MAXIMUM D.L.O. SIZE: 34 9/16" x 33 3/16".
3) UNEQUAL LITE MINIMUM D.L.O. SIZE: 32 1/2" x 19 3/4".
4) UNEQUAL LITE MAXIMUM D.L.O. SIZE: 32 1/2" x 46 1/2".
5) MAXIMUM SINGLE SASH SIZE: 38 3/4" x 68".

PRODUCT REVISED
as complying with the Florida Building Code
Acceptance No 13-0321.10
Expiration Date Nov. 24, 2015
By Manuel Perez
Miami-Dade Product Control

WinDoor INCORPORATED
7500 AMSTERDAM DRIVE
ORLANDO, FL 32832
Phone: 407.481.8400
Fax: 407.481.0505
www.windoorinc.com

SERIES V-100 PVC DUAL ACTION TILT-TURN WINDOW – LARGE MISSILE IMPACT ELEVATIONS AND ANCHORING LAYOUTS

DRAWN:	DWG NO.	REV
TJH	08-00991	B
SCALE NTS	DATE 05/18/10	SHEET 5 OF 23

LUIS R. LOMAS LICENSE No. 6251 STATE OF FLORIDA PROFESSIONAL ENGINEER

REVISIONS			
REV	DESCRIPTION	DATE	APPROVED
A	PER DADE LETTER DATED OCT. 4, 2010	10/07/10	R.L.
B	ADDED ALUMINUM REINFORCED OPTION	01/22/13	R.L.

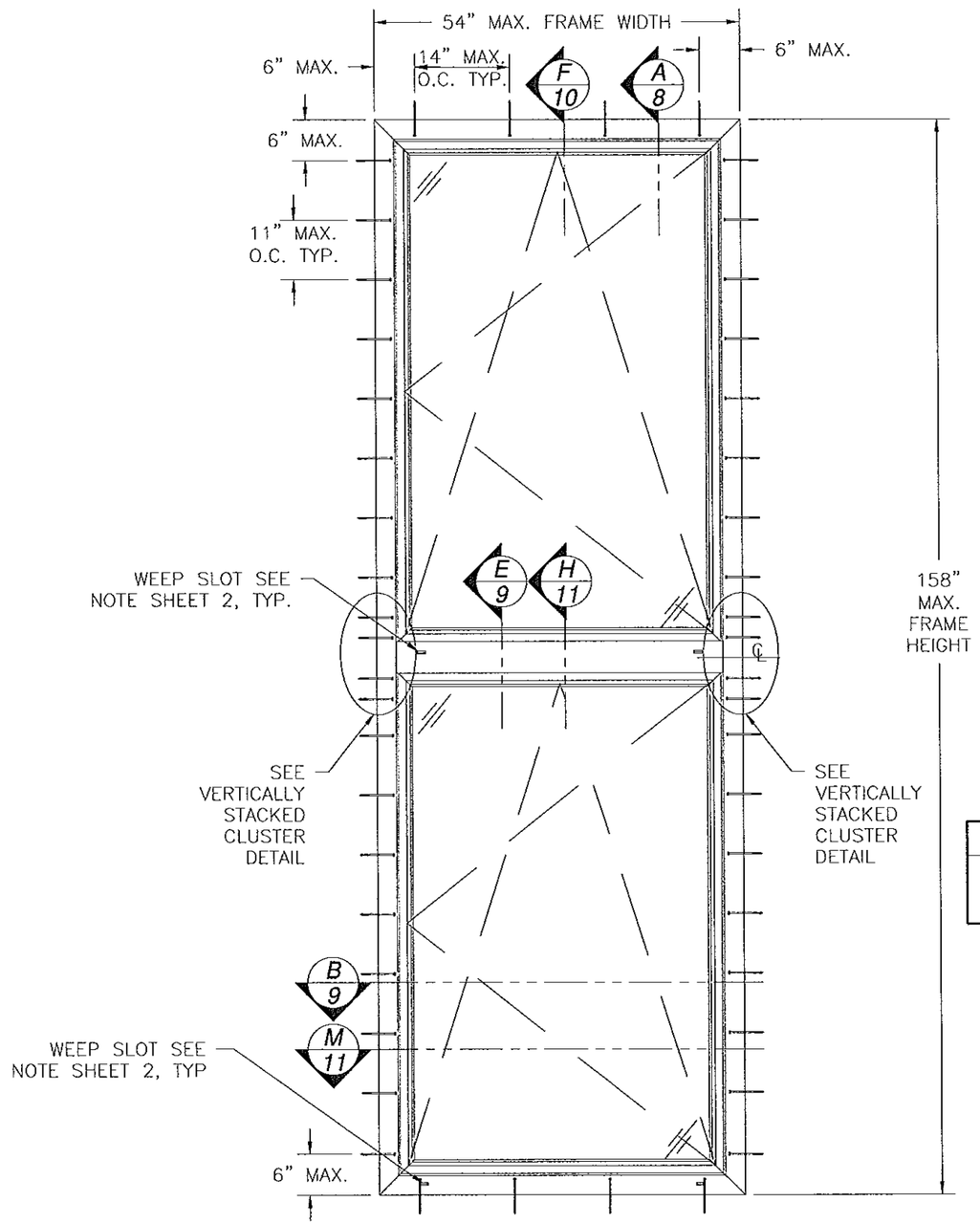

SERIES V-100 PVC DUAL ACTION
TILT-TURN VERTICALLY STACKED WINDOW FULL LITE
EXTERIOR VIEW

NOTES:

1) FULL LITE MAXIMUM D.L.O. SIZE: 43 5/8" x 69 5/8".
2) MAXIMUM SINGLE SASH SIZE: 50" x 76".

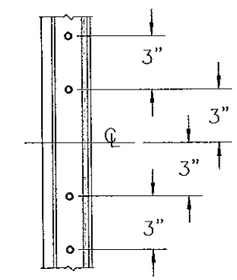

VERTICALLY STACKED
CLUSTER DETAIL

DESIGN PRESSURE RATING	*IMPACT RATING*
+ 100.0 PSF *- 130.0 PSF*	*LARGE MISSILE IMPACT*

FRAME, SASH & RAIL WITH ALUMINUM OR STEEL REINFORCEMENT

SIGNED: 02/18/2013

PRODUCT REVISED
as complying with the Florida Building Code
Acceptance No 13-0324.10
Expiration Date Nov 24, 2015
By Manuel Perez
Miami Dade Product Control

WinDoor INCORPORATED
7500 AMSTERDAM DRIVE
ORLANDO, FL 32832
Phone: 407.481.8400
Fax: 407.481.0505
www.windoorinc.com

SERIES V-100 PVC DUAL ACTION TILT-TURN WINDOW - LARGE MISSILE IMPACT ELEVATION AND ANCHORING LAYOUT

DRAWN:	DWG NO.	REV
TJH	08-00991	B
SCALE NTS	DATE 05/18/10	SHEET 6 OF 23

LUIS R. LOMAS LICENSE No. 62514 STATE OF FLORIDA PROFESSIONAL ENGINEER

REVISIONS			
REV	DESCRIPTION	DATE	APPROVED
A	PER DADE LETTER DATED OCT. 4, 2010	10/07/10	R.L.
B	ADDED ALUMINUM REINFORCED OPTION	01/22/13	R.L.

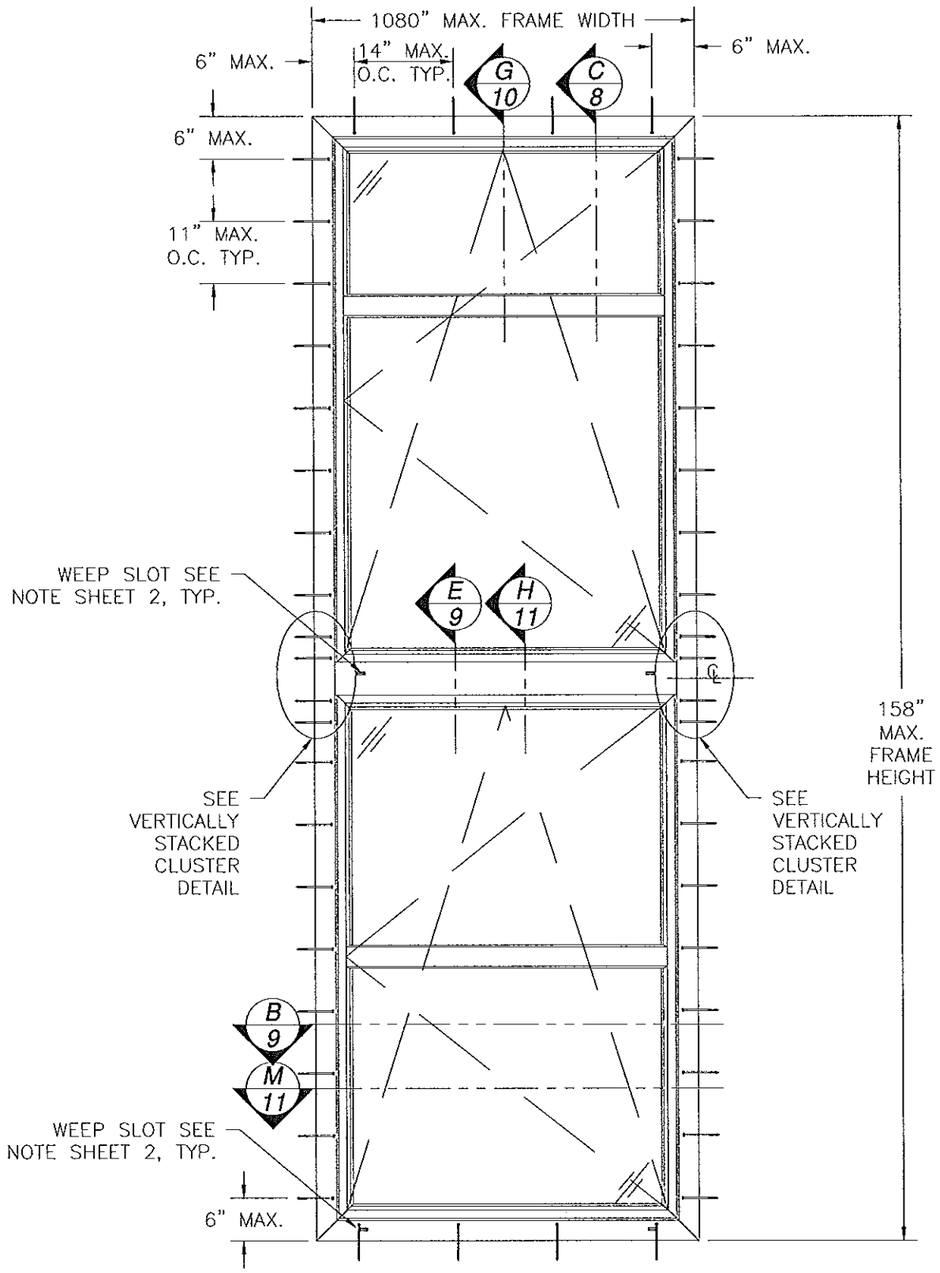

SERIES V-100 PVC DUAL ACTION TILT-TURN VERTICALLY STACKED WINDOW W/TRUE DIVIDED MUNTIN EQUAL AND UNEQUAL LITE

EXTERIOR VIEW

NOTES:

1) STACKED UNIT MAY CONTAIN A COMBINATION OF EQUAL AND/OR UNEQUAL LITES.
2) EQUAL LITE MAXIMUM D.L.O. SIZE: 43 5/8" x 33 3/16".
3) UNEQUAL LITE MINIMUM D.L.O. SIZE: 43 5/8" x 19 3/4".
4) UNEQUAL LITE MAXIMUM D.L.O. SIZE: 43 5/8" x 46 1/2".
5) MAXIMUM SINGLE SASH SIZE: 50" x 76".

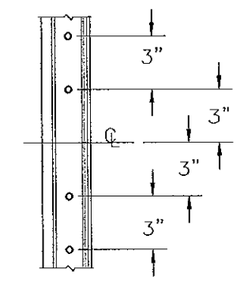

VERTICALLY STACKED CLUSTER DETAIL

DESIGN PRESSURE RATING	*IMPACT RATING*
+ 100.0 PSF *- 130.0 PSF*	*LARGE MISSILE IMPACT*

FRAME, SASH, RAIL & MULLION WITH ALUMINUM OR STEEL REINFORCEMENT

SIGNED: 02/18/2013

PRODUCT REVISED
as complying with the Florida Building Code
Acceptance No 13-0321.10
Expiration Date Nov. 24, 2015
By Manuel Perez
Miami Dade Product Control

WinDoor INCORPORATED
7500 AMSTERDAM DRIVE
ORLANDO, FL 32832
Phone: 407.481.8400
Fax: 407.481.0505
www.windoorinc.com

SERIES V-100 PVC DUAL ACTION TILT-TURN WINDOW - LARGE MISSILE IMPACT ELEVATION AND ANCHORING LAYOUT

LUIS R. LOMAS LICENSE No. 62514 STATE OF FLORIDA PROFESSIONAL ENGINEER

DRAWN:	DWG NO.	REV
TJH	08-00991	B
SCALE NTS	DATE 05/18/10	SHEET 7 OF 23

PARTS LIST				
NO.	PART NUMBER	DESCRIPTION	MANUFACTURER	MATERIAL
1	100.214	FRAME, HEAD, SILL AND JAMB	VEKA	RIGID PVC
2	103.228	PANEL FRAME, STILE AND RAIL	VEKA	RIGID PVC
3	102.218	85 MM T MULION	VEKA	RIGID PVC
4	107.200	1" GLAZING BEAD	VEKA	RIGID PVC
5	113.294.000.000	18GA. SASH REINFORCEMENT	VEKA	G90 GALVAN. STEEL
6	113.271.1 SO M	18GA. FRAME REINFORCEMENT	VEKA	G90 GALVAN. STEEL
7	113.271.400.000 PC	9GA. T MULLION REINFORCEMENT	VEKA	G90 GALVAN. STEEL
8	112.050	GLAZING GASKET	VEKA	EPDM DUROMETR 60
9	112.253	GLAZING GASKET	VEKA	EPDM DUROMETR 60
10	112.245	GLAZING GASKET	VEKA	EPDM DUROMETR 60
11	112.380	FILLER PROFILE	VEKA	EPDM DUROMETR 60
12	W0100-BL-03R	WEATHERSTRIP	RENKO	EPDM 60
13		1" LARGE MISSILE GLASS		
14		MULTI-POINT TILT-TURN HARDWARE	ROTO	
15		MULTI-POINT TILT-TURN HARDWARE	SIEGENIA	
16	SIKAFAST 552	GLAZING COMPOUND	SIKA	URETHANE
17	141.314	CONNECTOR		ZINC DIECAST
18	106.086	SEALING PAD		
19		#10 PFH TEK SCREW		
20	NOT USED			
21	102.238	118 MM T MULLION	VEKA	RIGID PVC
22		WEEP COVER		PLASTIC
23		#8 x 1 1/4" TEK SCREW		
24		M4.1 25mm SCREW		
25	FH-06512	FRAME REINFORCEMENT	KEYMARK	AL 6005A T-61
26	FH-07160	SASH REINFORCEMENT	KEYMARK	AL 6005A T-61
27	FH-06561	T MULLION REINFORCEMENT	KEYMARK	AL 6005A T-61

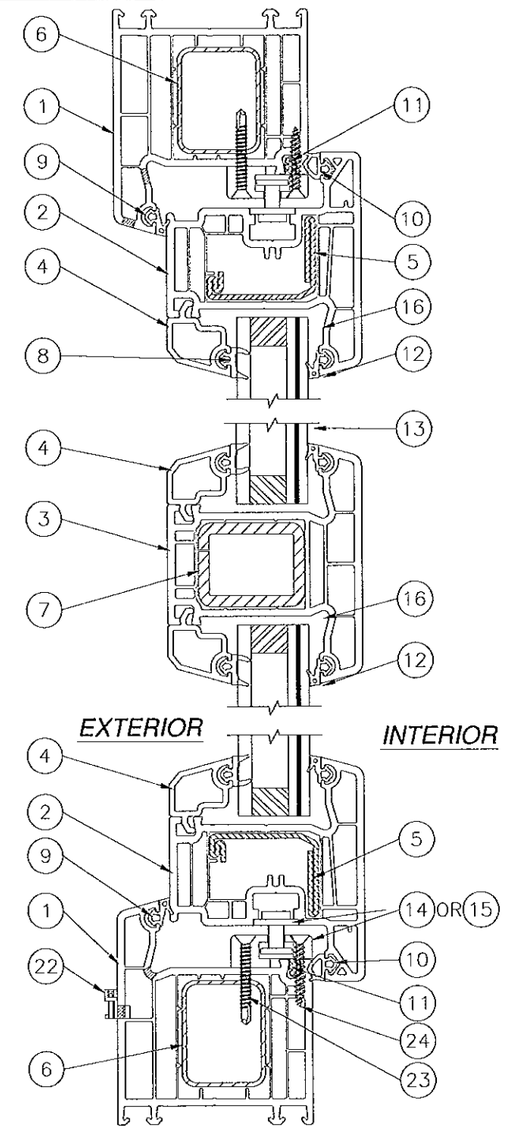

C/8 VERTICAL CROSS SECTION
STEEL REINFORCED

REVISIONS			
REV	DESCRIPTION	DATE	APPROVED
A	PER DADE LETTER DATED OCT. 4, 2010	10/07/10	R.L.
B	ADDED ALUMINUM REINFORCED OPTION	01/22/13	R.L.

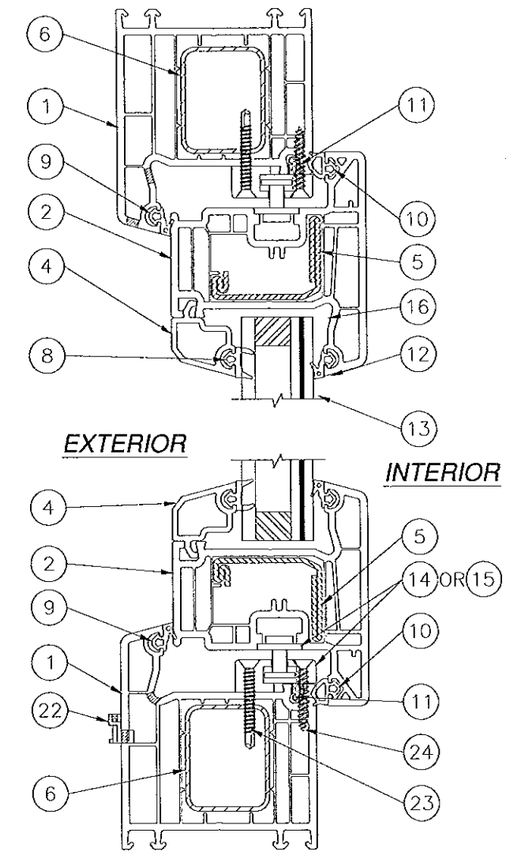

A/8 VERTICAL CROSS SECTION
STEEL REINFORCED

SIGNED: 02/18/2013

FOR ILLUSTRATION PURPOSES ONLY
REFER TO SHEETS 13 - 17 FOR INSTALLATION DETAILS.

PRODUCT REVISED
as complying with the Florida
Building Code
Acceptance No 13-0321.10
Expiration Date Nov. 24, 2015
By Manuel Diaz
Miami Dade Product Control

WinDoor INCORPORATED
7500 AMSTERDAM DRIVE
ORLANDO, FL 32832
Phone: 407.481.8400
Fax: 407.481.0505
www.windoorinc.com

SERIES V-100 PVC DUAL ACTION TILT-TURN
WINDOW - LARGE MISSILE IMPACT
BILL OF MATERIALS AND CROSS SECTIONS

DRAWN:	DWG NO.	REV
TJH	08-00991	B
SCALE NTS	DATE 05/18/10	SHEET 8 OF 23

LUIS R. LOMAS
LICENSE
No. 62514
STATE OF FLORIDA
PROFESSIONAL ENGINEER

REVISIONS			
REV	DESCRIPTION	DATE	APPROVED
A	PER DADE LETTER DATED OCT. 4, 2010	10/07/10	R.L.
B	ADDED ALUMINUM REINFORCED OPTION	01/22/13	R.L.

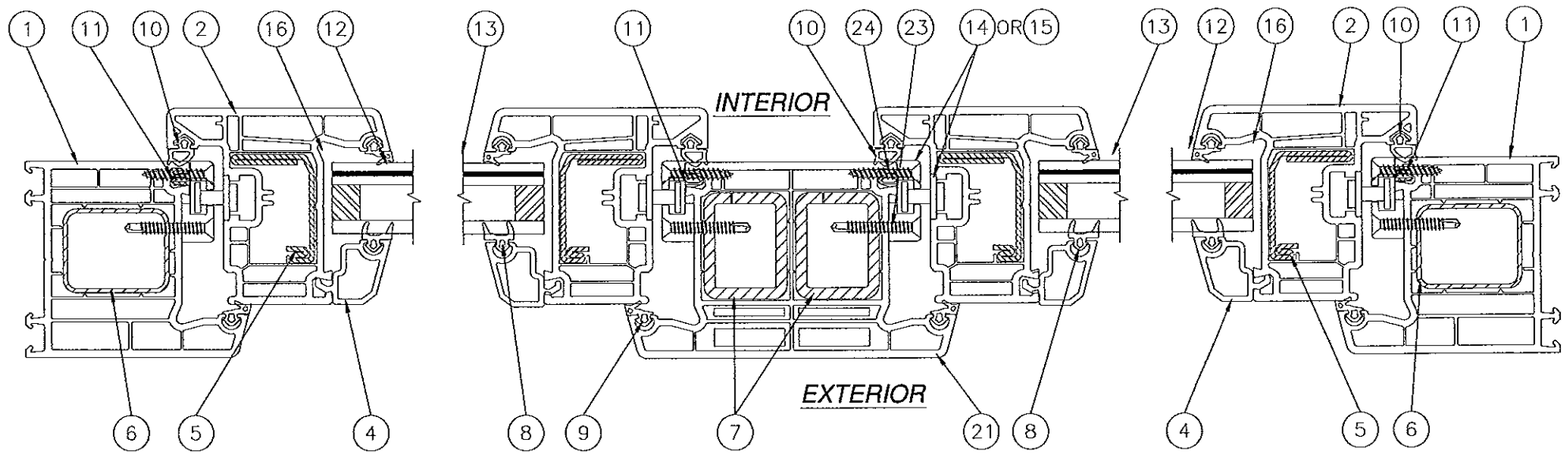

D/9 HORIZONTAL CROSS SECTION
STEEL REINFORCED

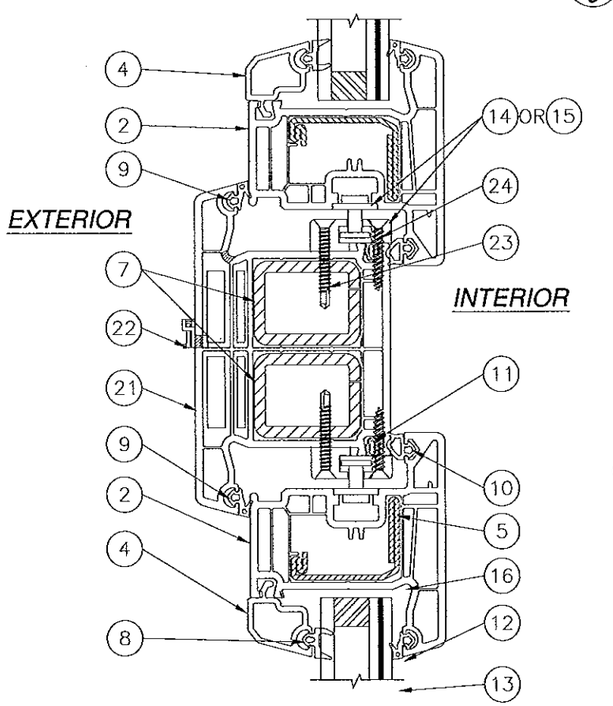

E/9 VERTICAL CROSS SECTION
STEEL REINFORCED

FOR ILLUSTRATION PURPOSES ONLY
REFER TO SHEETS 13 - 17 FOR INSTALLATION DETAILS.

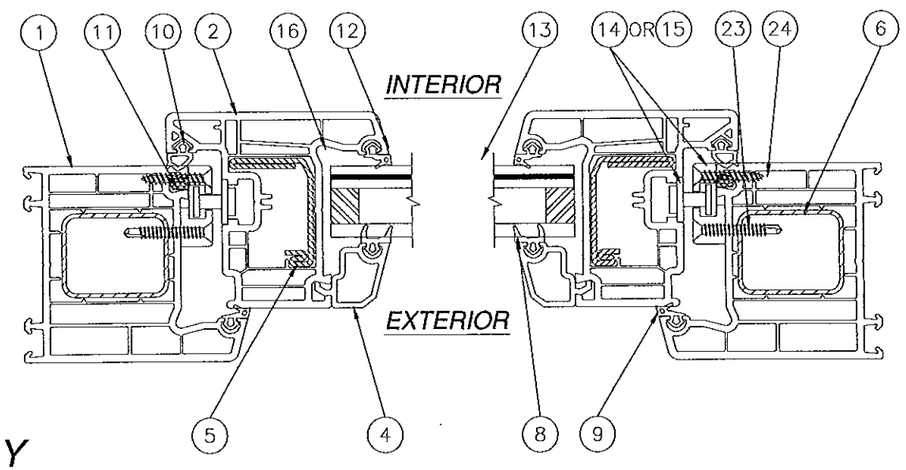

B/9 HORIZONTAL CROSS SECTION
STEEL REINFORCED

SIGNED: 02/18/2013

PRODUCT REVISED
as complying with the Florida
Building Code
Acceptance No 13-0327.10
Expiration Date Nov. 14 2015
By Manuel Perez
Miami Dade Product Control

WinDoor INCORPORATED
7500 AMSTERDAM DRIVE
ORLANDO, FL 32832
Phone: 407.481.8400
Fax: 407.481.0505
www.windoorinc.com

SERIES V-100 PVC DUAL ACTION TILT-TURN WINDOW - LARGE MISSILE IMPACT CROSS SECTIONS

DRAWN:	DWG NO.	REV
TJH	08-00991	B
SCALE NTS	DATE 05/18/10	SHEET 9 OF 23

LUIS R. LOMAS
LICENSE
No. 62514
STATE OF FLORIDA
PROFESSIONAL ENGINEER

REVISIONS			
REV	DESCRIPTION	DATE	APPROVED
A	PER DADE LETTER DATED OCT. 4, 2010	10/07/10	R.L.
B	ADDED ALUMINUM REINFORCED OPTION	01/22/13	R.L.

FOR ILLUSTRATION PURPOSES ONLY

REFER TO SHEETS 13 - 17 FOR INSTALLATION DETAILS.

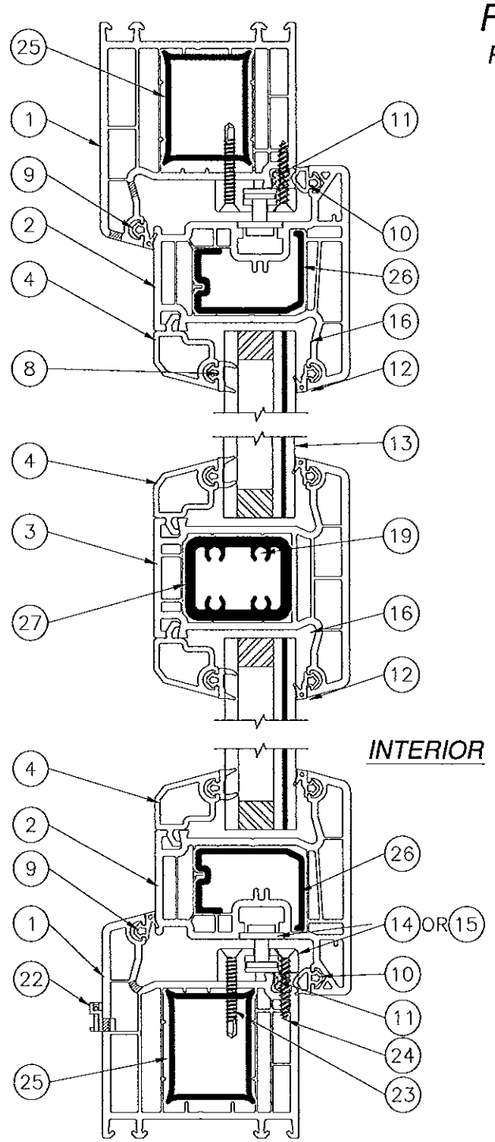

G/10 VERTICAL CROSS SECTION
ALUMINUM REINFORCED

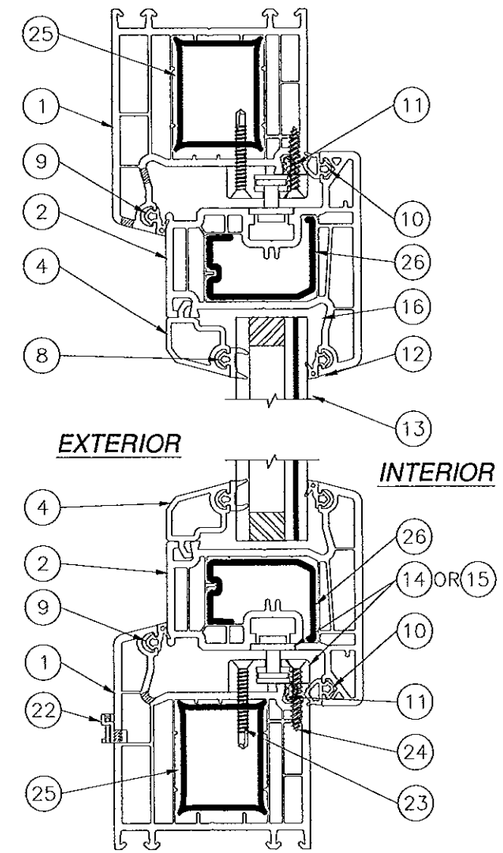

F/10 VERTICAL CROSS SECTION
ALUMINUM REINFORCED

SIGNED: 02/18/2013

PRODUCT REVISED
as complying with the Florida
Building Code
Acceptance No 13-0321.10
Expiration Date Nov. 24, 2015
By Manuel Perez
Miami Dade Product Control

WinDoor INCORPORATED
7500 AMSTERDAM DRIVE
ORLANDO, FL 32832
Phone: 407.481.8400
Fax: 407.481.0505
www.windoorinc.com

SERIES V-100 PVC DUAL ACTION TILT-TURN WINDOW - LARGE MISSILE IMPACT CROSS SECTIONS

DRAWN:	DWG NO.	REV
TJH	08-00991	B
SCALE NTS	DATE 05/18/10	SHEET 10 OF 23

LUIS R. LOMAS
LICENSE
No. 62514
STATE OF FLORIDA
PROFESSIONAL ENGINEER

REVISIONS			
REV	DESCRIPTION	DATE	APPROVED
A	PER DADE LETTER DATED OCT. 4, 2010	10/07/10	R.L.
B	ADDED ALUMINUM REINFORCED OPTION	01/22/13	R.L.

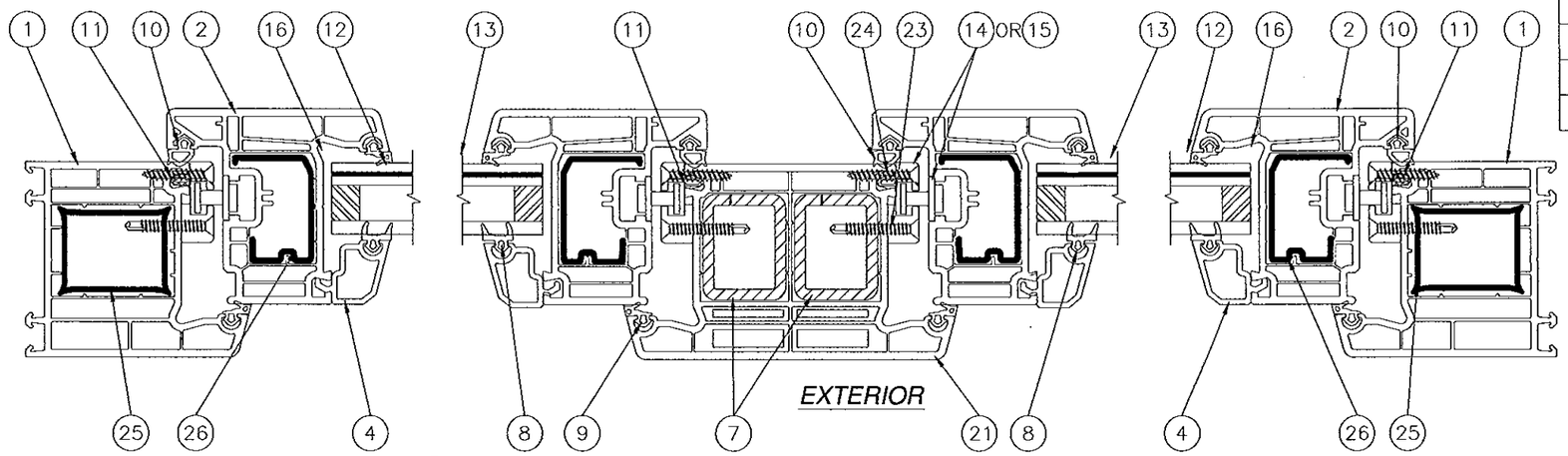

J/11 HORIZONTAL CROSS SECTION
STEEL REINFORCED

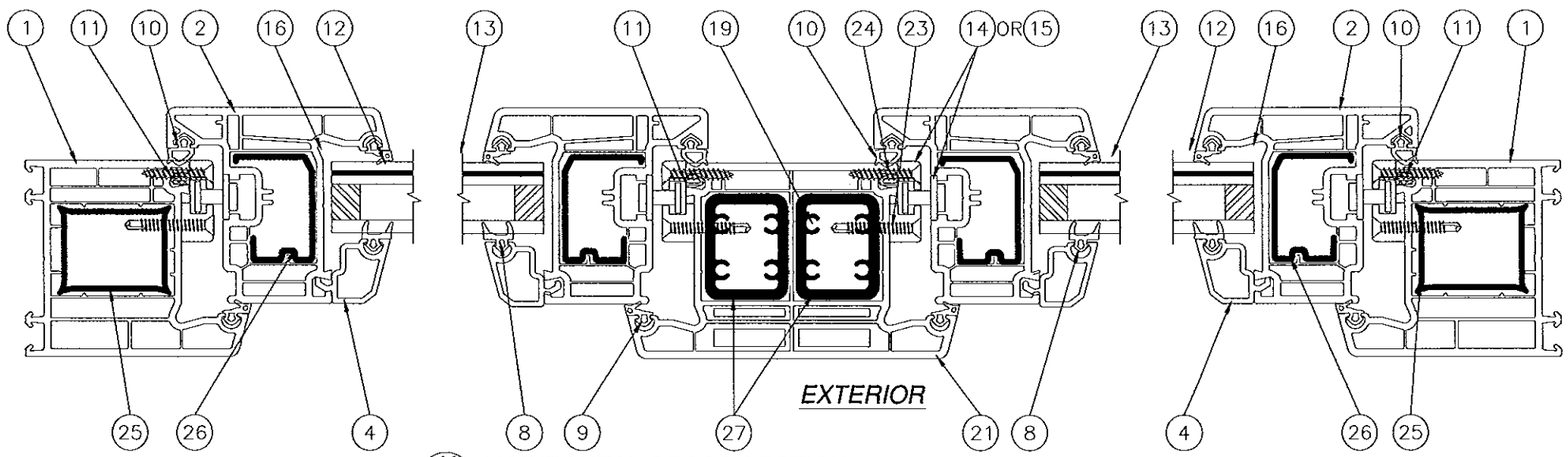

K/11 HORIZONTAL CROSS SECTION
ALUMINUM REINFORCED

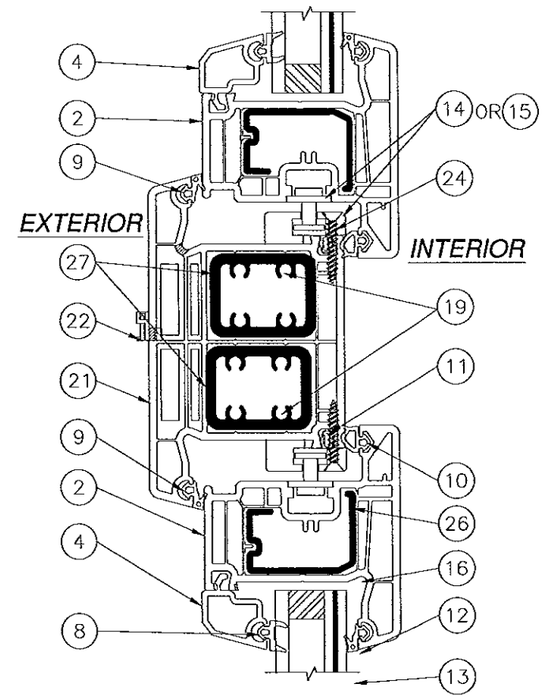

H/11 VERTICAL CROSS SECTION
ALUMINUM REINFORCED

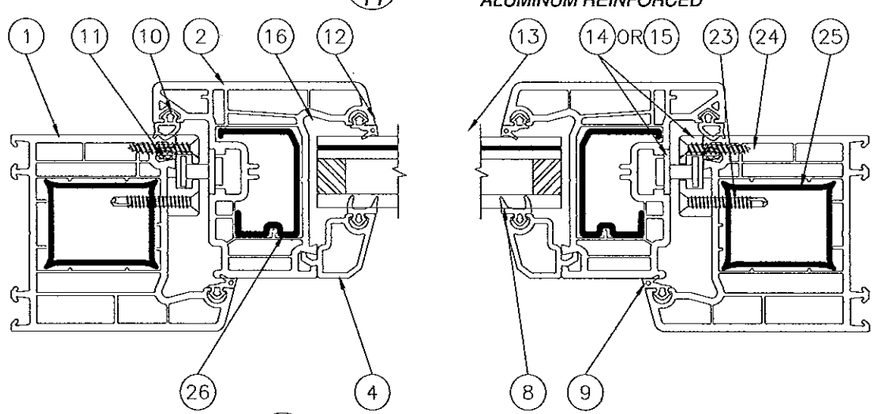

M/11 HORIZONTAL CROSS SECTION
ALUMINUM REINFORCED

FOR ILLUSTRATION PURPOSES ONLY

REFER TO SHEETS 13 - 17 FOR INSTALLATION DETAILS.

SIGNED: 02/18/2013

PRODUCT REVISED
as complying with the Florida
Building Code
Acceptance No 13-0321.10
Expiration Date Nov. 22, 2015
By Manuel Perez
Miami Dade Product Control

WinDoor INCORPORATED
7500 AMSTERDAM DRIVE
ORLANDO, FL 32832
Phone: 407.481.8400
Fax: 407.481.0505
www.windoorinc.com

SERIES V-100 PVC DUAL ACTION TILT-TURN
WINDOW - LARGE MISSILE IMPACT
CROSS SECTIONS

DRAWN:	DWG NO.	REV
TJH	08-00991	B
SCALE NTS	DATE 05/18/10	SHEET 11 OF 23

LUIS R. LOMAS
LICENSE
No. 6251
STATE OF FLORIDA
PROFESSIONAL ENGINEER

REVISIONS			
REV	DESCRIPTION	DATE	APPROVED
A	PER DADE LETTER DATED OCT. 4, 2010	10/07/10	R.L.
B	ADDED ALUMINUM REINFORCED OPTION	01/22/13	R.L.

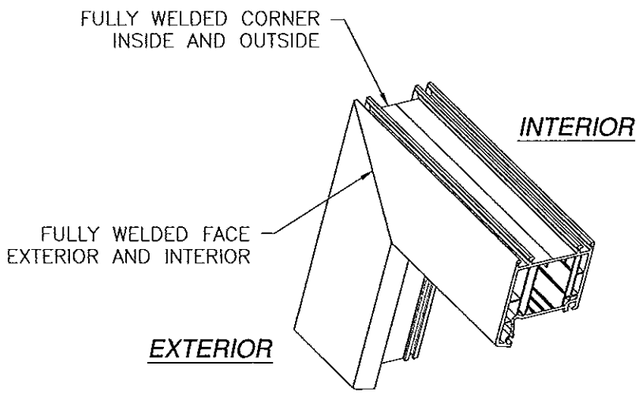

FRAME CONER DETAIL

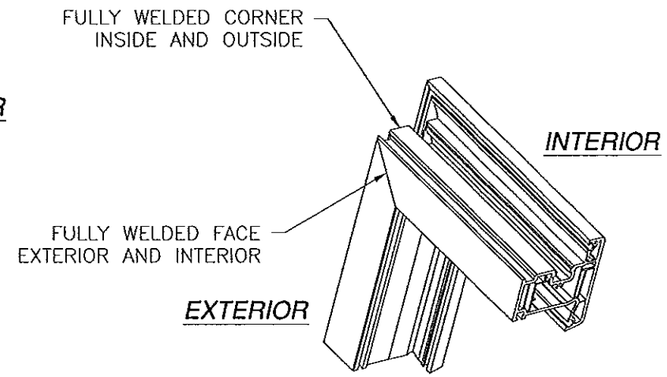

SASH CONER DETAIL

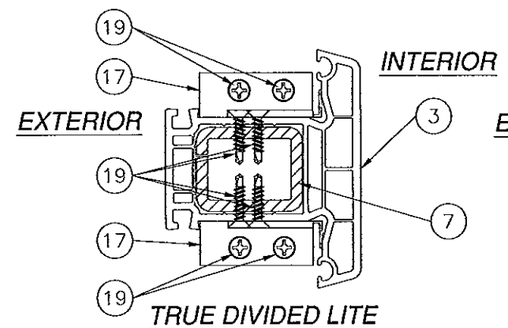

TRUE DIVIDED LITE
MUNTIN CONNECTION DETAIL
STEEL REINFORCED

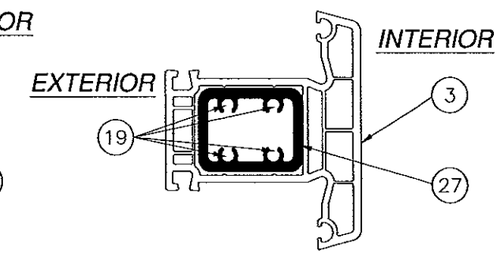

TRUE DIVIDED LITE
MUNTIN CONNECTION DETAIL
ALUMINUM REINFORCED

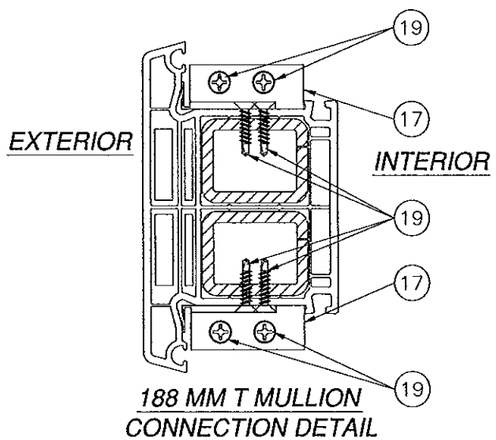

188 MM T MULLION
CONNECTION DETAIL
STEEL REINFORCED
HORIZONTAL CONNECTION SHOWN,
VERTICAL CONNECTION SIMILAR

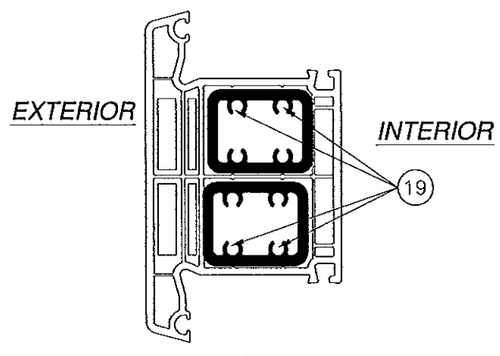

T MULLION
CONNECTION DETAIL
ALUMINUM REINFORCED
HORIZONTAL CONNECTION SHOWN,
VERTICAL CONNECTION SIMILAR

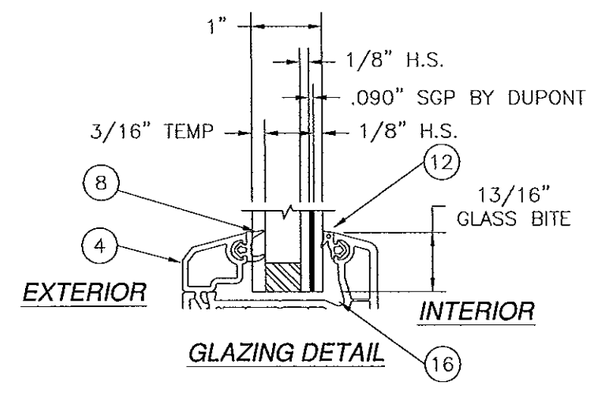

GLAZING DETAIL

SIGNED: 02/18/2013

PRODUCT REVISED
as complying with the Florida
Building Code
Acceptance No 13-0321.10
Expiration Date Nov. 24, 2015
By Miami Dade Product Control

WinDoor INCORPORATED
7500 AMSTERDAM DRIVE
ORLANDO, FL 32832
Phone: 407.481.8400
Fax: 407.481.0505
www.windoorinc.com

SERIES V-100 PVC DUAL ACTION TILT-TURN
WINDOW - LARGE MISSILE IMPACT
CORNER CONSTRUCTION AND GLAZING DETAILS

DRAWN:	DWG NO.	REV
TJH	08-00991	B
SCALE NTS	DATE 05/18/10	SHEET 12 OF 23

LUIS R. LOMAS
LICENSE
No. 62514
STATE OF FLORIDA
PROFESSIONAL ENGINEER

REVISIONS			
REV	DESCRIPTION	DATE	APPROVED
A	PER DADE LETTER DATED OCT. 4, 2010	10/07/10	R.L.
B	ADDED ALUMINUM REINFORCED OPTION	01/22/13	R.L.

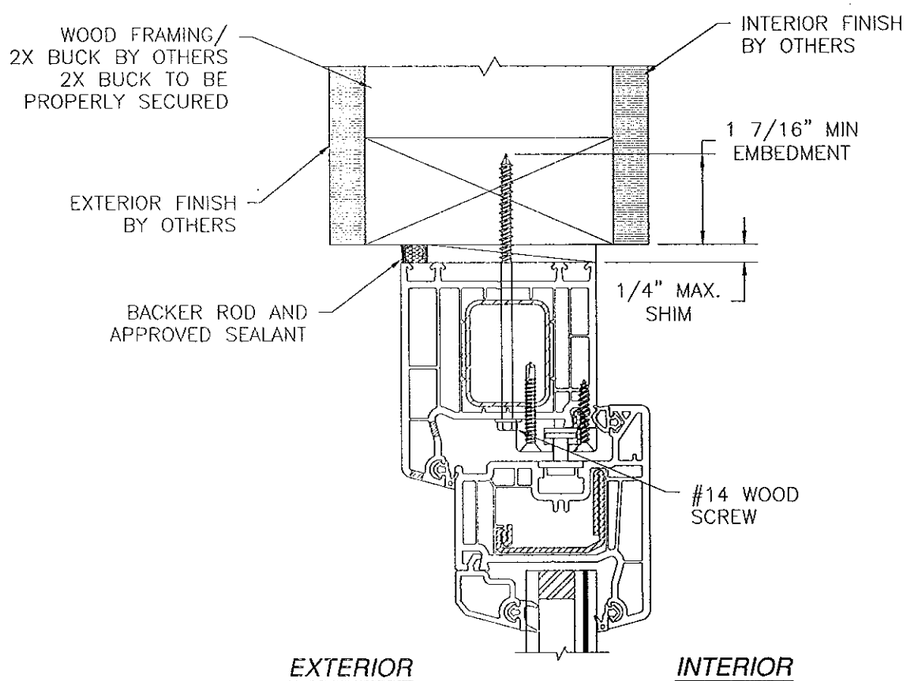

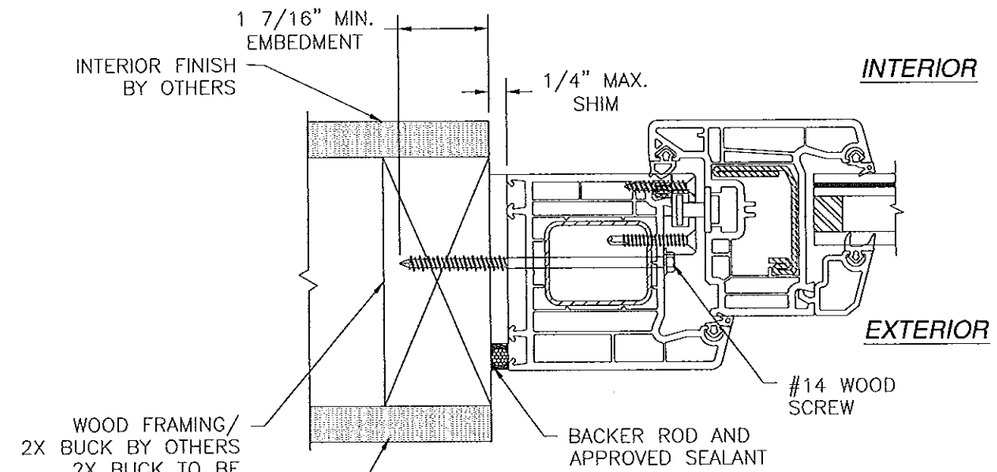

HORIZONTAL CROSS SECTION

WOOD FRAMING/2X BUCK INSTALLATION
STEEL REINFORCEMENT SHOWN
ALUMINUM REINFORCEMENT SIMILAR

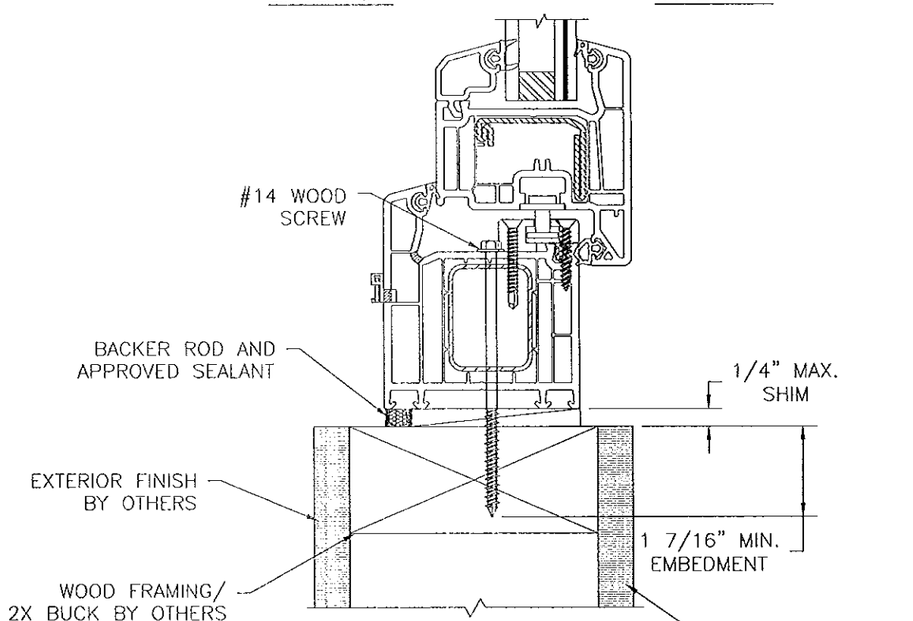

VERTICAL CROSS SECTION

WOOD FRAMING/2X BUCK INSTALLATION
SECTION A SHOWN, SECTIONS C AND E SIMILAR
STEEL REINFORCEMENT SHOWN
ALUMINUM REINFORCEMENT SIMILAR

SIGNED: 02/18/2013

PRODUCT REVISED
as complying with the Florida
Building Code
Acceptance No 13-0321.10
Expiration Date Nov. 24, 2015
By Manuel Perez
Miami/Dade Product Control

WinDoor INCORPORATED
7500 AMSTERDAM DRIVE
ORLANDO, FL 32832
Phone: 407.481.8400
Fax: 407.481.0505
www.windoorinc.com

SERIES V-100 PVC DUAL ACTION TILT-TURN
WINDOW - LARGE MISSILE IMPACT
INSTALLATION DETAILS

LUIS R. LOMAS
LICENSE
No. 62514
STATE OF FLORIDA
PROFESSIONAL ENGINEER

DRAWN:	DWG NO.	REV
TJH	08-00991	B
SCALE NTS	DATE 05/18/10	SHEET 13 OF 23

REVISIONS			
REV	DESCRIPTION	DATE	APPROVED
A	PER DADE LETTER DATED OCT. 4, 2010	10/07/10	R.L.
B	ADDED ALUMINUM REINFORCED OPTION	01/22/13	R.L.

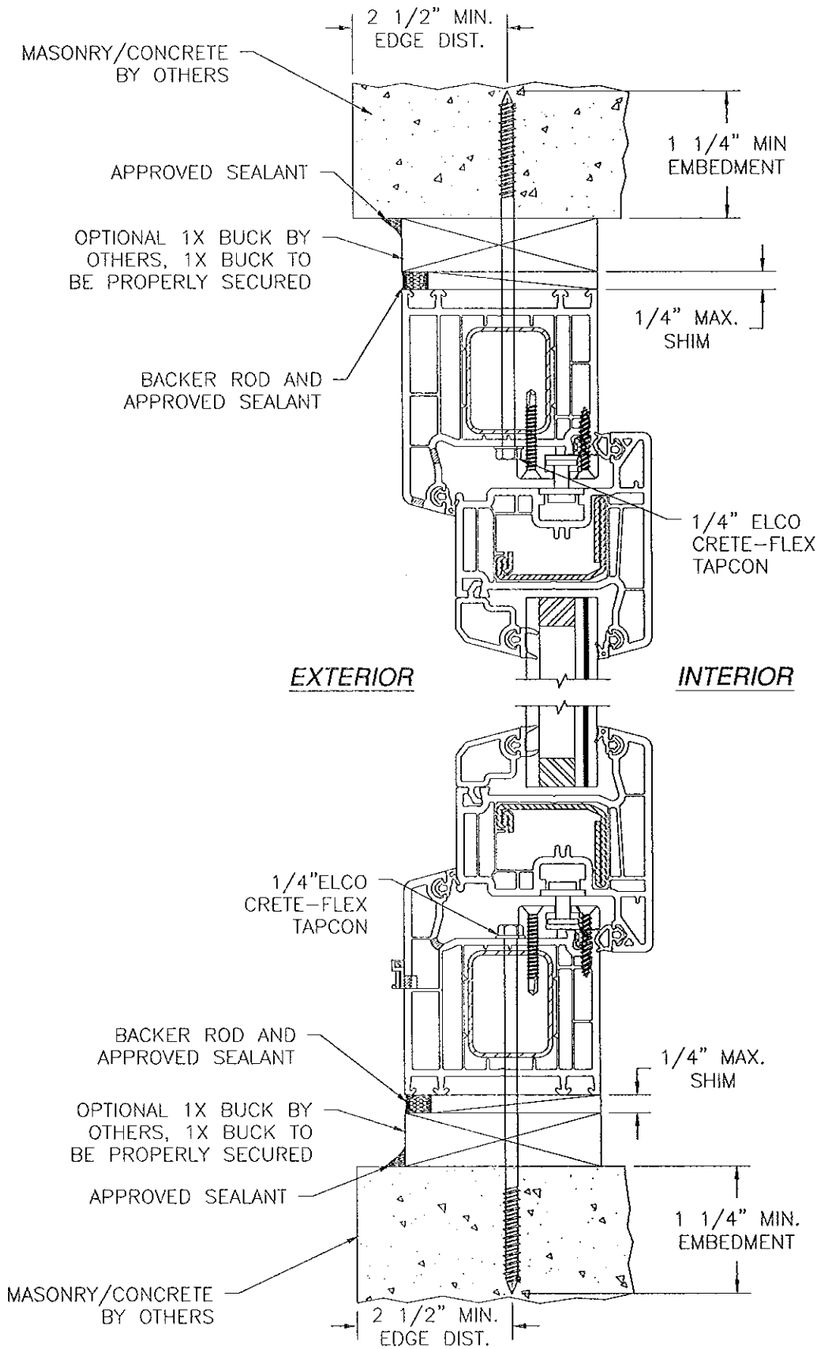

VERTICAL CROSS SECTION

CONCRETE/MASONRY INSTALLATION
SECTION A SHOWN, SECTIONS C AND E SIMILAR
STEEL REINFORCEMENT SHOWN
ALUMINUM REINFORCEMENT SIMILAR

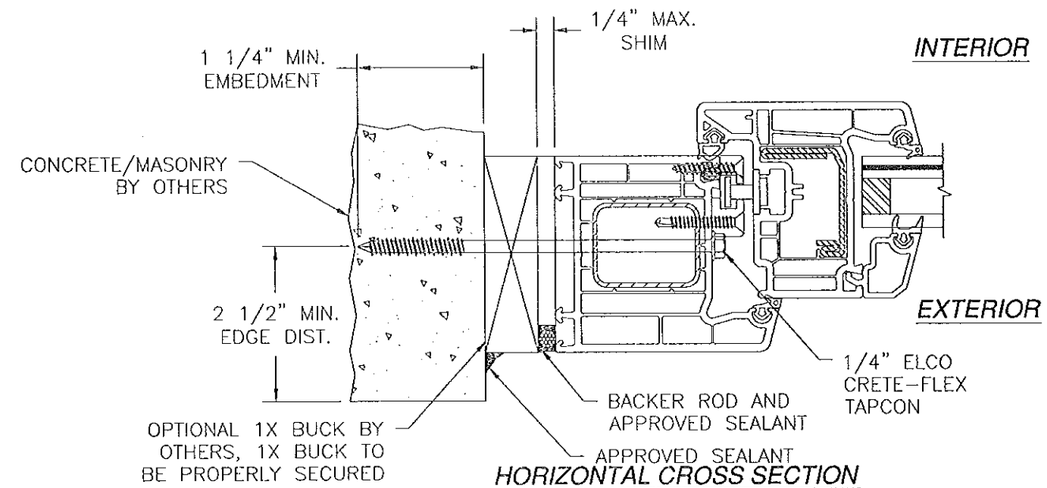

HORIZONTAL CROSS SECTION

CONCRETE/MASONRY INSTALLATION
STEEL REINFORCEMENT SHOWN
ALUMINUM REINFORCEMENT SIMILAR

SIGNED: 02/18/2013

PRODUCT REVISED
as complying with the Florida
Building Code
Acceptance No 13-0321.10
Expiration Date Jan. 24, 2015
By Manuel Perez
Miami Dade Product Control

WinDoor INCORPORATED
7500 AMSTERDAM DRIVE
ORLANDO, FL 32832
Phone: 407.481.8400
Fax: 407.481.0505
www.windoorinc.com

SERIES V-100 PVC DUAL ACTION TILT-TURN
WINDOW - LARGE MISSILE IMPACT
INSTALLATION DETAILS

DRAWN:	DWG NO.	REV
TJH	08-00991	B
SCALE NTS	DATE 05/18/10	SHEET 14 OF 23

LUIS R. LOMAS
LICENSE
No. 62514
STATE OF
FLORIDA
PROFESSIONAL ENGINEER

REVISIONS			
REV	DESCRIPTION	DATE	APPROVED
A	PER DADE LETTER DATED OCT. 4, 2010	10/07/10	R.L.
B	ADDED ALUMINUM REINFORCED OPTION	01/22/13	R.L.

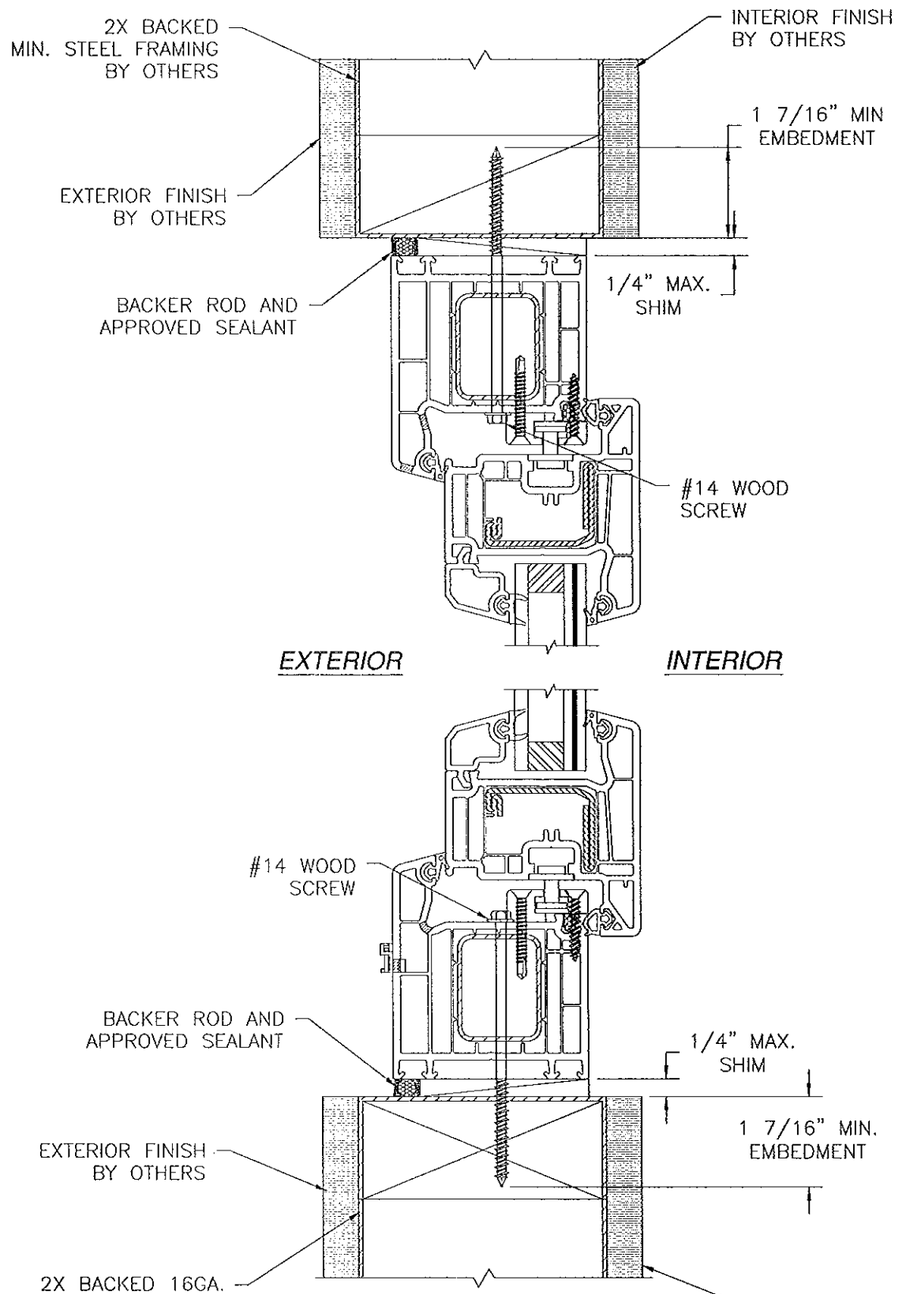

VERTICAL CROSS SECTION

2X BACKED 16GA. STEEL FRAMING INSTALLATION
SECTION A SHOWN, SECTIONS C AND E SIMILAR
STEEL REINFORCEMENT SHOWN
ALUMINUM REINFORCEMENT SIMILAR

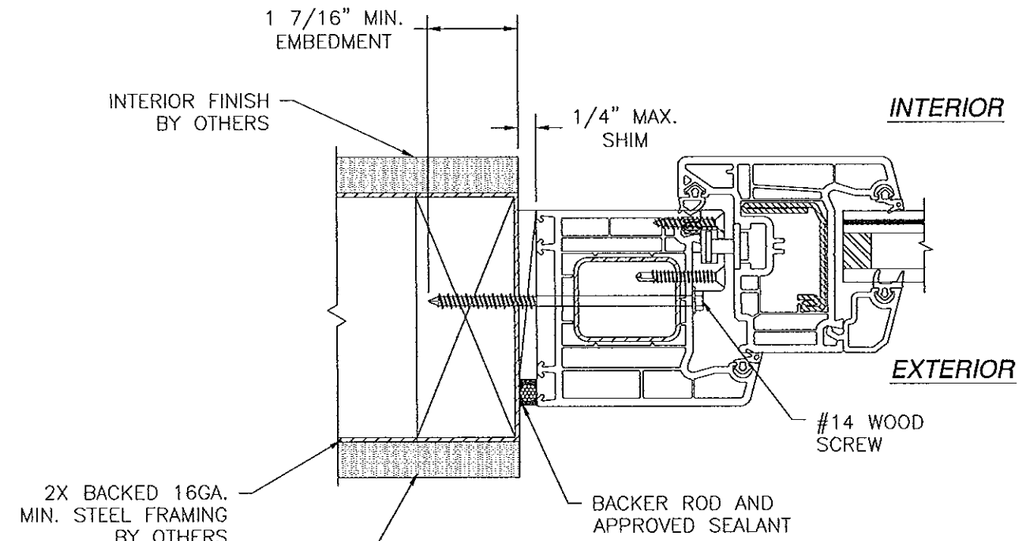

HORIZONTAL CROSS SECTION

2X BACKED 16GA. STEEL FRAMING INSTALLATION
STEEL REINFORCEMENT SHOWN
ALUMINUM REINFORCEMENT SIMILAR

SIGNED: 02/18/2013

PRODUCT REVISED
as complying with the Florida
Building Code
Acceptance No 13-0321.10
Expiration Date Nov. 24, 2015
By Manuel Perez
Miami-Dade Product Control

WinDoor INCORPORATED

7500 AMSTERDAM DRIVE
ORLANDO, FL 32832
Phone: 407.481.8400
Fax: 407.481.0505
www.windoorinc.com

SERIES V-100 PVC DUAL ACTION TILT-TURN
WINDOW - LARGE MISSILE IMPACT
INSTALLATION DETAILS

DRAWN:	DWG NO.	REV
TJH	08-00991	B
SCALE NTS	DATE 05/18/10	SHEET 15 OF 23

LUIS R. LOMAS
LICENSE
No. 62514
STATE OF
FLORIDA
PROFESSIONAL ENGINEER

REVISIONS			
REV	DESCRIPTION	DATE	APPROVED
A	PER DADE LETTER DATED OCT. 4, 2010	10/07/10	R.L.
B	ADDED ALUMINUM REINFORCED OPTION	01/22/13	R.L.

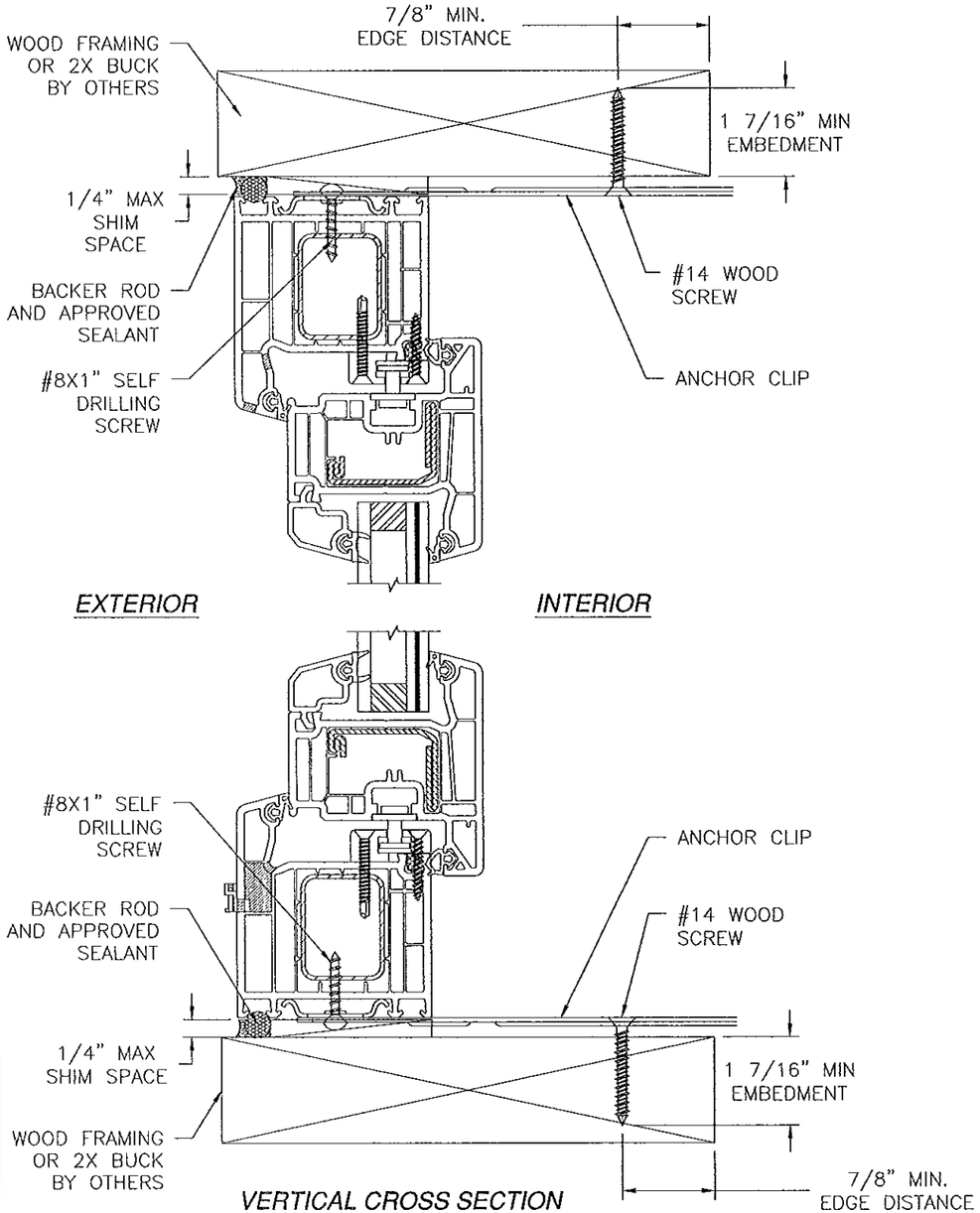

VERTICAL CROSS SECTION
WOOD FRAMING OR 2X BUCK INSTALLATION
HEAD AND SILL SHOWN, JAMBS SIMILAR

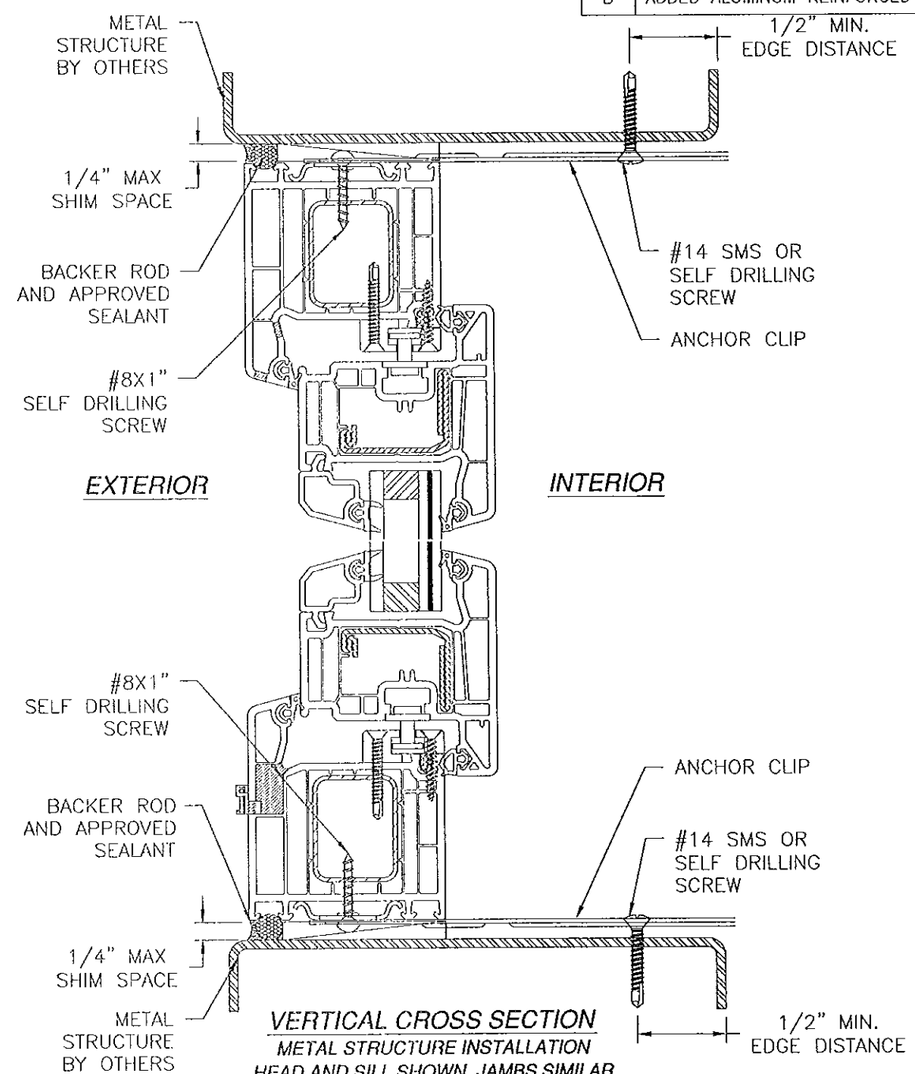

VERTICAL CROSS SECTION
METAL STRUCTURE INSTALLATION
HEAD AND SILL SHOWN, JAMBS SIMILAR

SIGNED: 02/18/2013

NOTE: - SEALANT AND BACKER ROD MATERIAL AND JOINT DESIGN BY OTHERS.
- INTERIOR AND EXTERIOR FINISHES BY OTHERS OMITTED FOR CLARITY.

PRODUCT REVISED
as complying with the Florida
Building Code
Acceptance No 13-0321.10
Expiration Date Nov. 24, 2015
By Manuel Diaz
Miami Dade Product Control

WinDoor INCORPORATED
7500 AMSTERDAM DRIVE
ORLANDO, FL 32832
Phone: 407.481.8400
Fax: 407.481.0505
www.windoorinc.com

SERIES V-100 PVC DUAL ACTION TILT-TURN
WINDOW - LARGE MISSILE IMPACT
INSTALLATION DETAILS

DRAWN:	DWG NO.	REV
TJH	08-00991	B
SCALE NTS	DATE 05/18/10	SHEET 16 OF 23

LUIS R. LOMAS
LICENSE
No. 62514
STATE OF
FLORIDA
PROFESSIONAL ENGINEER

REVISIONS			
REV	DESCRIPTION	DATE	APPROVED
A	PER DADE LETTER DATED OCT. 4, 2010	10/07/10	R.L.
B	ADDED ALUMINUM REINFORCED OPTION	01/22/13	R.L.

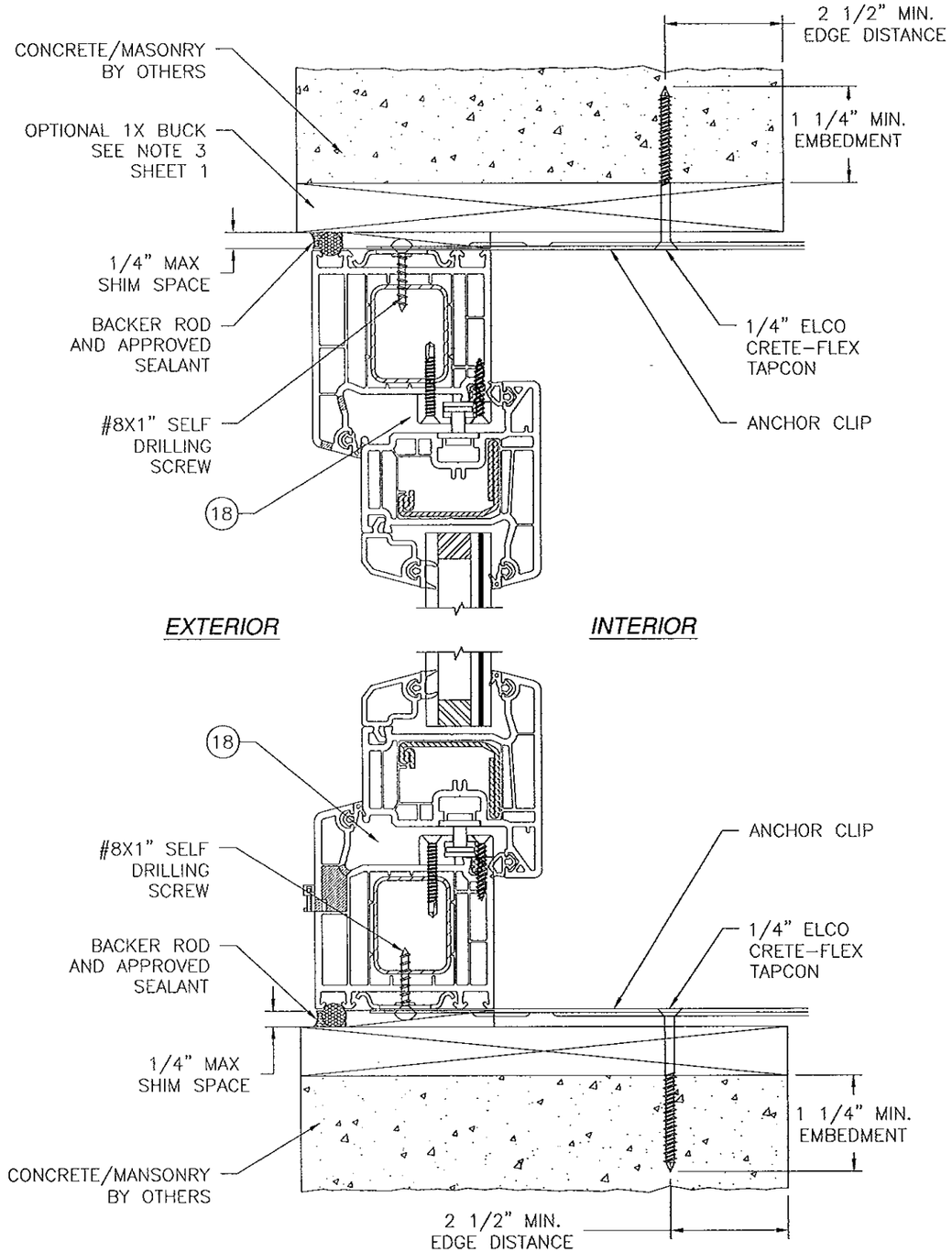

VERTICAL CROSS SECTION
CONCRETE/MASONRY INSTALLATION
HEAD AND SILL, JAMBS SIMILAR

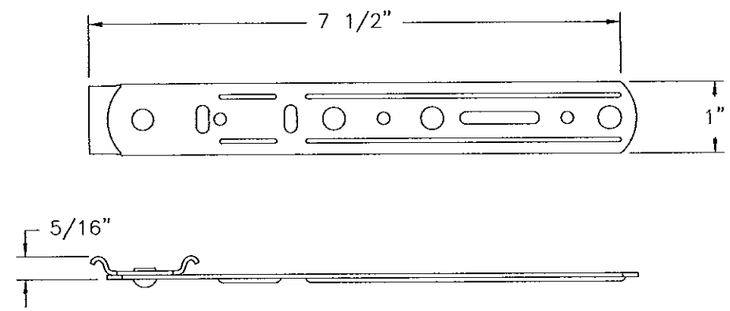

(8) *ANCHOR CLIP*
G90 GALVANIZED STEEL .058" THICK

NOTE: - SEALANT AND BACKER ROD MATERIAL AND JOINT DESIGN BY OTHERS.
- INTERIOR AND EXTERIOR FINISHES BY OTHERS OMITTED FOR CLARITY.

SIGNED: 02/18/2013

PRODUCT REVISED
as complying with the Florida
Building Code
Acceptance No 13-0321.10
Expiration Date Nov. 04, 2015
By Manuel Perez
Miami-Dade Product Control

WinDoor INCORPORATED
7500 AMSTERDAM DRIVE
ORLANDO, FL 32832
Phone: 407.481.8400
Fax: 407.481.0505
www.windoorinc.com

SERIES V-100 PVC DUAL ACTION TILT-TURN
WINDOW - LARGE MISSILE IMPACT
INSTALLATION DETAILS

DRAWN:	DWG NO.	REV
TJH	08-00991	B
SCALE NTS	DATE 05/18/10	SHEET 17 OF 23

LUIS R. LOMAS
LICENSE
No. 62514
STATE OF
FLORIDA
PROFESSIONAL ENGINEER

REVISIONS			
REV	DESCRIPTION	DATE	APPROVED
A	PER DADE LETTER DATED OCT. 4, 2010	10/07/10	R.L.
B	ADDED ALUMINUM REINFORCED OPTION	01/22/13	R.L.

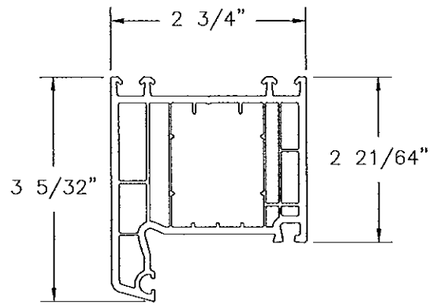

(1) FRAME, HEAD, JAMB AND SILL
WHITE RIGID PVC .110" THICK

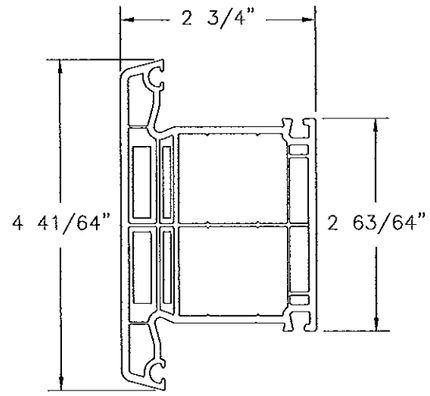

(21) 118 MM T MULLION
WHITE RIGID PVC .110" THICK

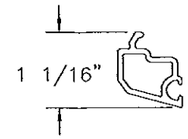

(4) 1" GLAZING BEAD
WHITE RIGID PVC .075" THICK

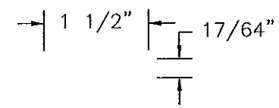

(20) RIGID FILLER
RIGID PVC

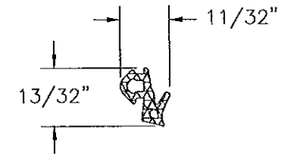

(9) GLAZING GASKET
EPDM DUROMETER 60

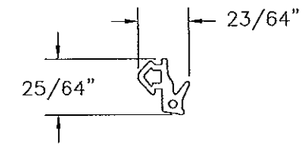

(12) WEATHERSTRIP
EDPM DUROMETER 60

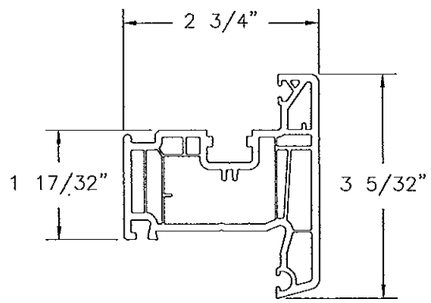

(2) PANEL FRAME, STILE AND RAIL
WHITE RIGID PVC .110" THICK

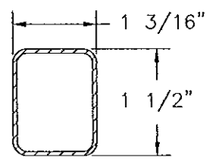

(6) 18GA. FRAME REINFORCEMENT
G90 GALVANIZED STEEL .051" THICK MIN.

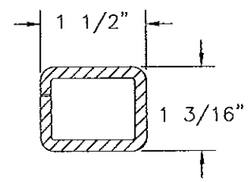

(7) 9GA. T MULLION REINFORCEMENT
G90 GALVANIZED STEEL .157" THICK MIN.

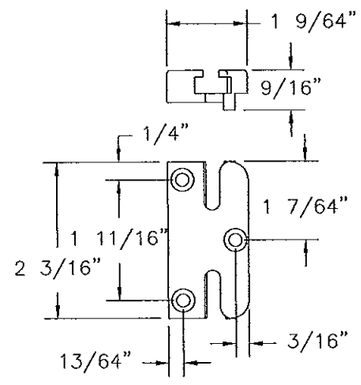

KEEPER

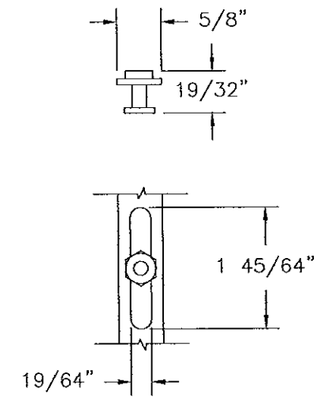

MUSHROOM CAM

(15) OR (14) MULTI-POINT TILT HARDWARE
ROTO OR SIEGENIA

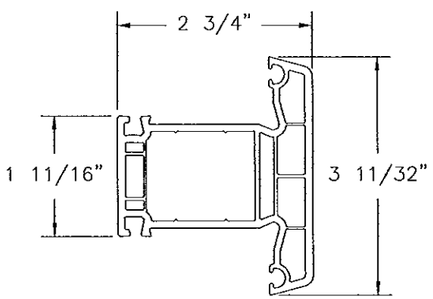

(2) 85 MM T MULLION
WHITE RIGID PVC .110" THICK

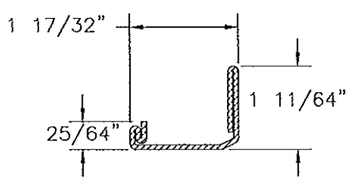

(5) 18GA. SASH REINFORCEMENT
G90 GALVANIZED STEEL .051" THICK MIN.

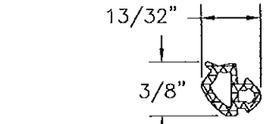

(10) GLAZING GASKET
EPDM DUROMETER 60

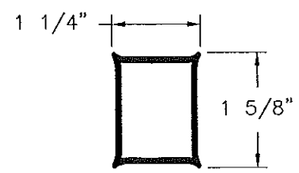

(25) FRAME REINFORCEMENT
ALUMINUM 6005A-T61.080" THICK

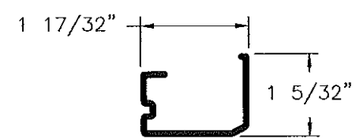

(26) SASH REINFORCEMENT
ALUMINUM 6005A-T61.080" THICK

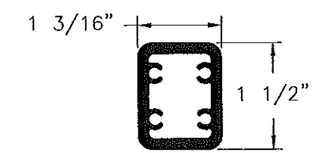

(27) T MULLION REINFORCEMENT
ALUMINUM 6005A-T61.150" THICK

SIGNED: 02/18/2013

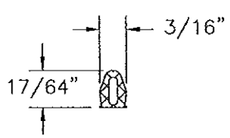

(11) FILLER PROFILE
EPDM DUROMETER 60

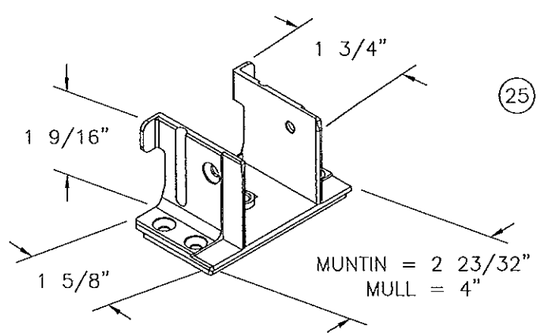

(17) CONNECTOR
ZINC DIECAST

PRODUCT REVISED
as complying with the Florida Building Code
Acceptance No 13-0321.10
Expiration Date Nov. 24, 2015
By Manuel Ortiz
Miami Dade Product Control

WinDoor INCORPORATED
7500 AMSTERDAM DRIVE
ORLANDO, FL 32832
Phone: 407.481.8400
Fax: 407.481.0505
www.windoorinc.com

SERIES V-100 PVC DUAL ACTION TILT-TURN WINDOW - LARGE MISSILE IMPACT COMPONENTS

DRAWN: TJH	DWG NO. 08-00991	REV B
SCALE NTS	DATE 05/18/10	SHEET 18 OF 23

LUIS R. LOMAS LICENSE No. 6251 STATE OF FLORIDA PROFESSIONAL ENGINEER

REVISIONS			
REV	DESCRIPTION	DATE	APPROVED
A	PER DADE LETTER DATED OCT. 4, 2010	10/07/10	R.L.
B	ADDED ALUMINUM REINFORCED OPTION	01/22/13	R.L.

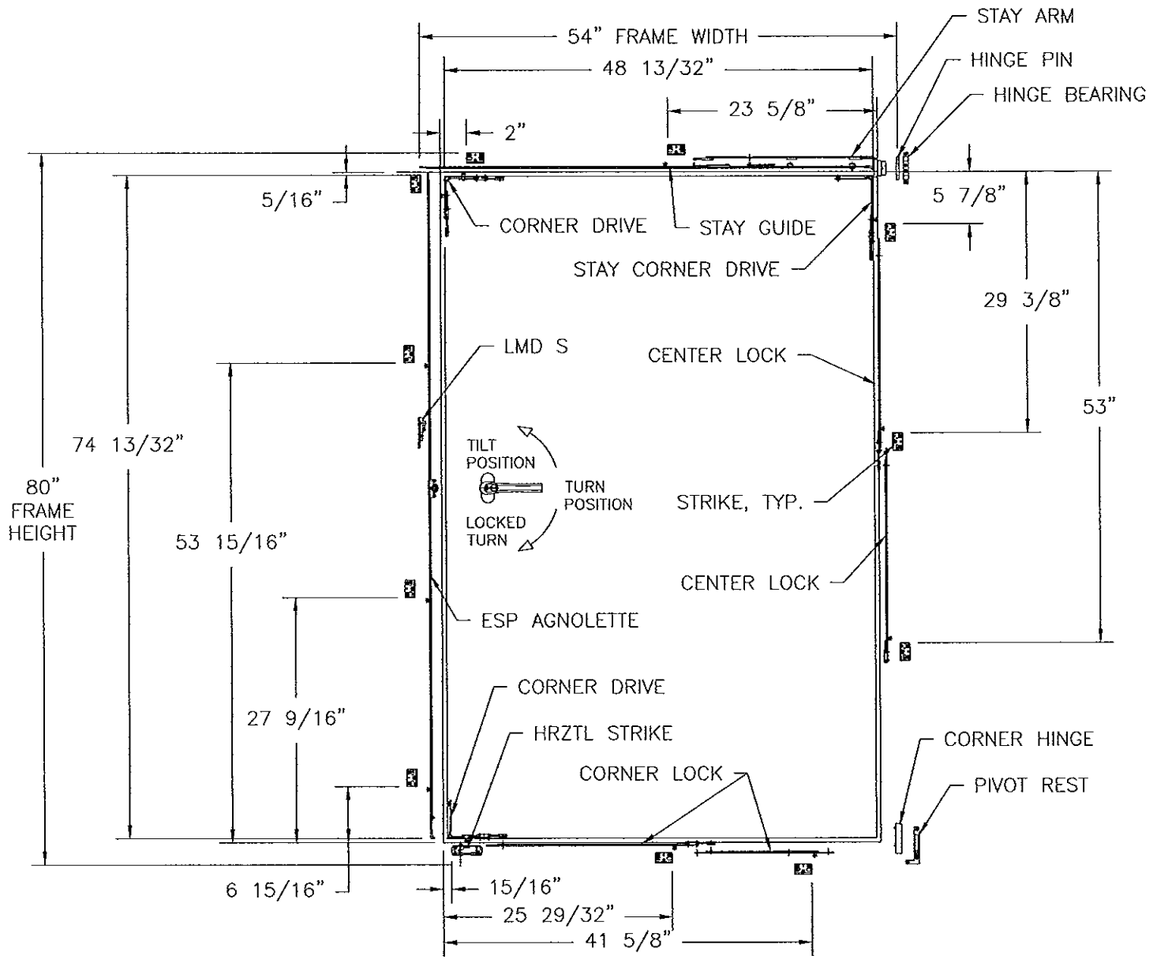

FRAME HARDWARE LAYOUT
ROTO HARDWARE INTERIOR VIEW

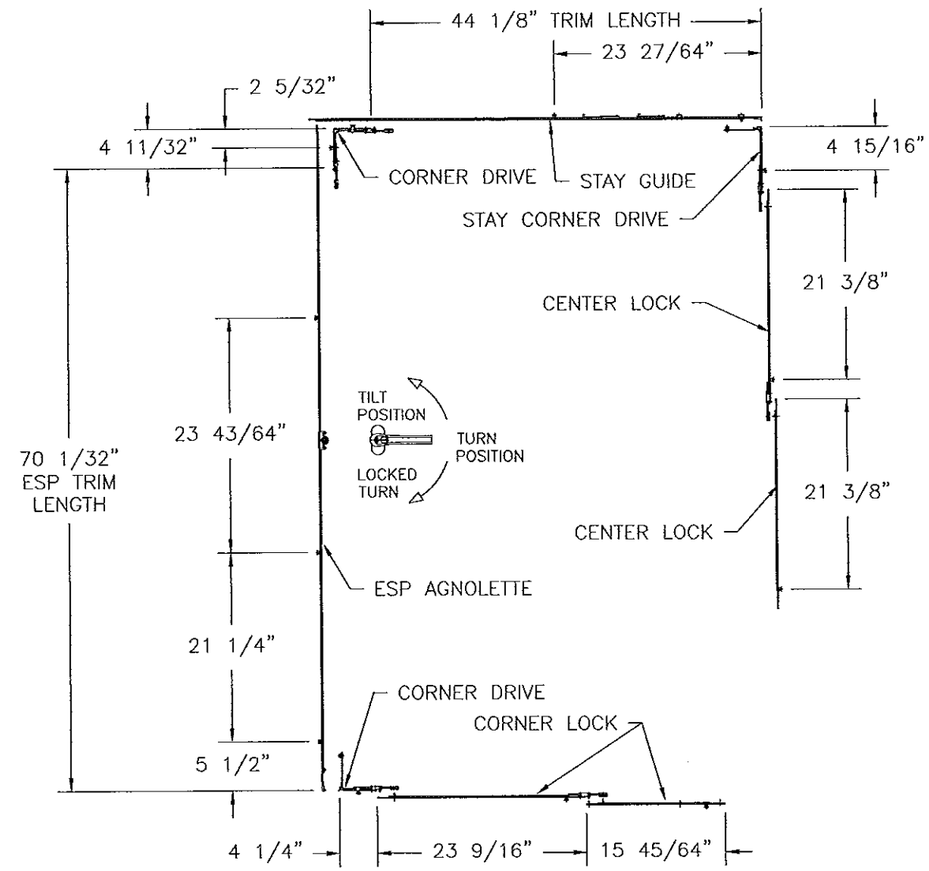

SASH HARDWARE LAYOUT
ROTO HARDWARE INTERIOR VIEW

SIGNED: 02/18/2013

PRODUCT REVISED
as complying with the Florida
Building Code
Acceptance No 13-0321.10
Expiration Date Nov 14, 2015
By Manuel Perez
Miami Dade Product Control

WinDoor INCORPORATED
7500 AMSTERDAM DRIVE
ORLANDO, FL 32832
Phone: 407.481.8400
Fax: 407.481.0505
www.windoorinc.com

SERIES V-100 PVC DUAL ACTION TILT-TURN
WINDOW - LARGE MISSILE IMPACT
SINGLE ROTO HARDWARE LAYOUT

DRAWN:	DWG NO.	REV
TJH	08-00991	B
SCALE NTS	DATE 05/18/10	SHEET 19 OF 23

LUIS R. LOMAS
LICENSE
No. 62514
STATE OF FLORIDA
PROFESSIONAL ENGINEER

REVISIONS			
REV	DESCRIPTION	DATE	APPROVED
A	PER DADE LETTER DATED OCT. 4, 2010	10/07/10	R.L.
B	ADDED ALUMINUM REINFORCED OPTION	01/22/13	R.L.

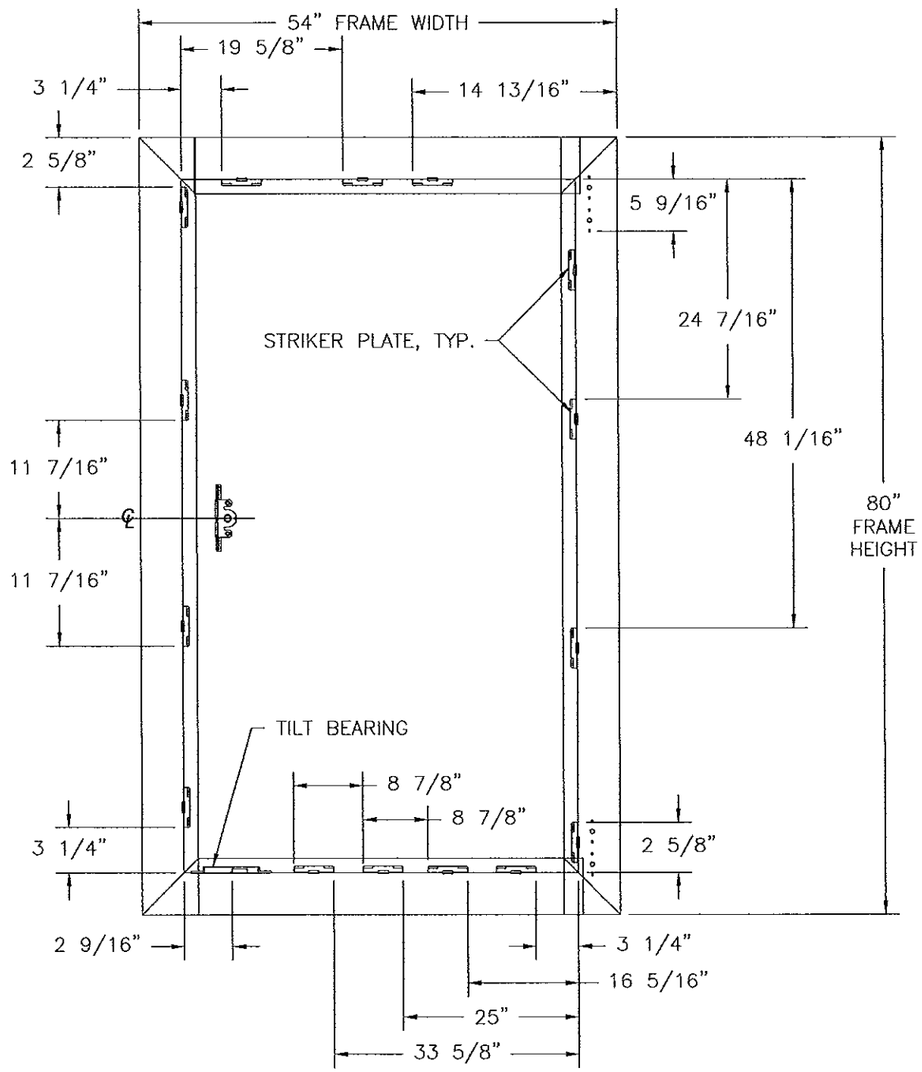

FRAME HARDWARE LAYOUT
SIEGENIA HARDWARE INTERIOR VIEW

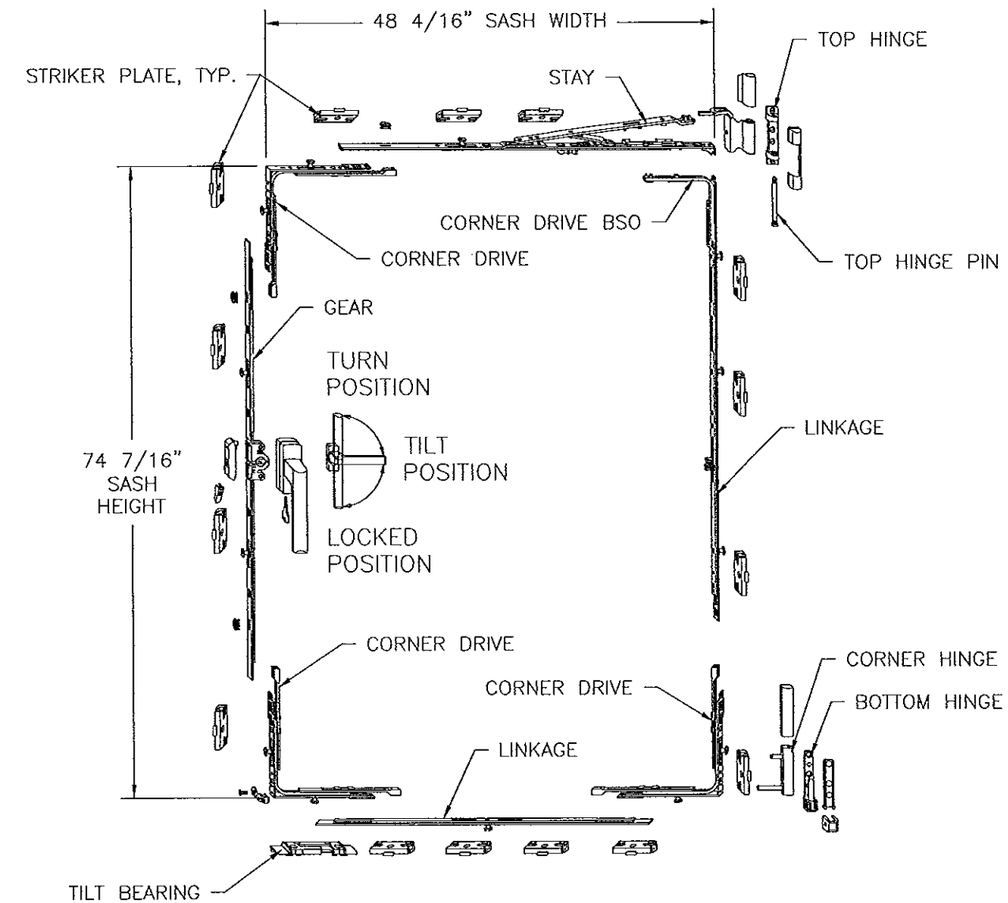

SASH HARDWARE LAYOUT
SIEGENIA HARDWARE INTERIOR VIEW

SIGNED: 02/18/2013

PRODUCT REVISED
as complying with the Florida
Building Code
Acceptance No 13-0321.10
Expiration Date Nov 24, 2015
By Manuel Perez
Miami Dade Product Control

WinDoor INCORPORATED
7500 AMSTERDAM DRIVE
ORLANDO, FL 32832
Phone: 407.481.8400
Fax: 407.481.0505
www.windoorinc.com

SERIES V-100 PVC DUAL ACTION TILT-TURN
WINDOW - LARGE MISSILE IMPACT
SINGLE SIEGENIA HARDWARE LAYOUT

DRAWN:	DWG NO.	REV
TJH	08-00991	B
SCALE NTS	DATE 05/18/10	SHEET 20 OF 23

LUIS R. LOMAS LICENSE No. 62514 STATE OF FLORIDA PROFESSIONAL ENGINEER

REVISIONS			
REV	DESCRIPTION	DATE	APPROVED
A	PER DADE LETTER DATED OCT. 4, 2010	10/07/10	R.L.
B	ADDED ALUMINUM REINFORCED OPTION	01/22/13	R.L.

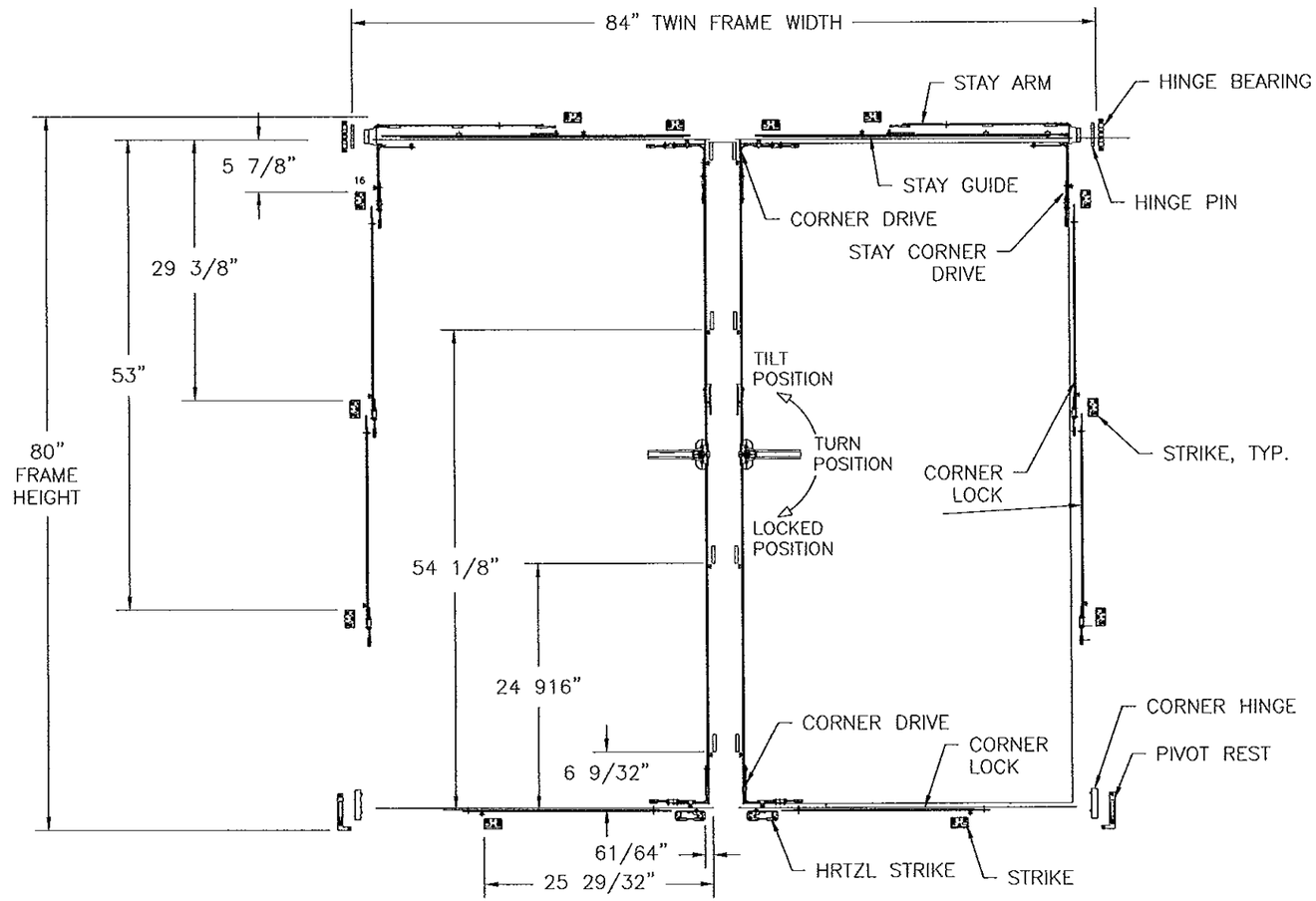

FRAME AND SASH HARDWARE LAYOUT

TWIN UNIT ROTO HAREDWARE INTERIOR VIEW

SIGNED: 02/18/2013

PRODUCT REVISED
as complying with the Florida
Building Code
Acceptance No 13-0321.10
Expiration Date ~~Oct. 24, 2015~~
By Manuel Diaz
Miami-Dade Product Control

WinDoor INCORPORATED

7500 AMSTERDAM DRIVE
ORLANDO, FL 32832
Phone: 407.481.8400
Fax: 407.481.0505
www.windoorinc.com

SERIES V-100 PVC DUAL ACTION TILT-TURN
WINDOW - LARGE MISSILE IMPACT
TWIN ROTO HARDWARE LAYOUT

DRAWN:	DWG NO.	REV
TJH	08-00991	B
SCALE NTS	DATE 05/18/10	SHEET 21 OF 23

LUIS R. LOMAS
LICENSE
No. 62514
STATE OF FLORIDA
PROFESSIONAL ENGINEER

REVISIONS			
REV	DESCRIPTION	DATE	APPROVED
A	PER DADE LETTER DATED OCT. 4, 2010	10/07/10	R.L.
B	ADDED ALUMINUM REINFORCED OPTION	01/22/13	R.L.

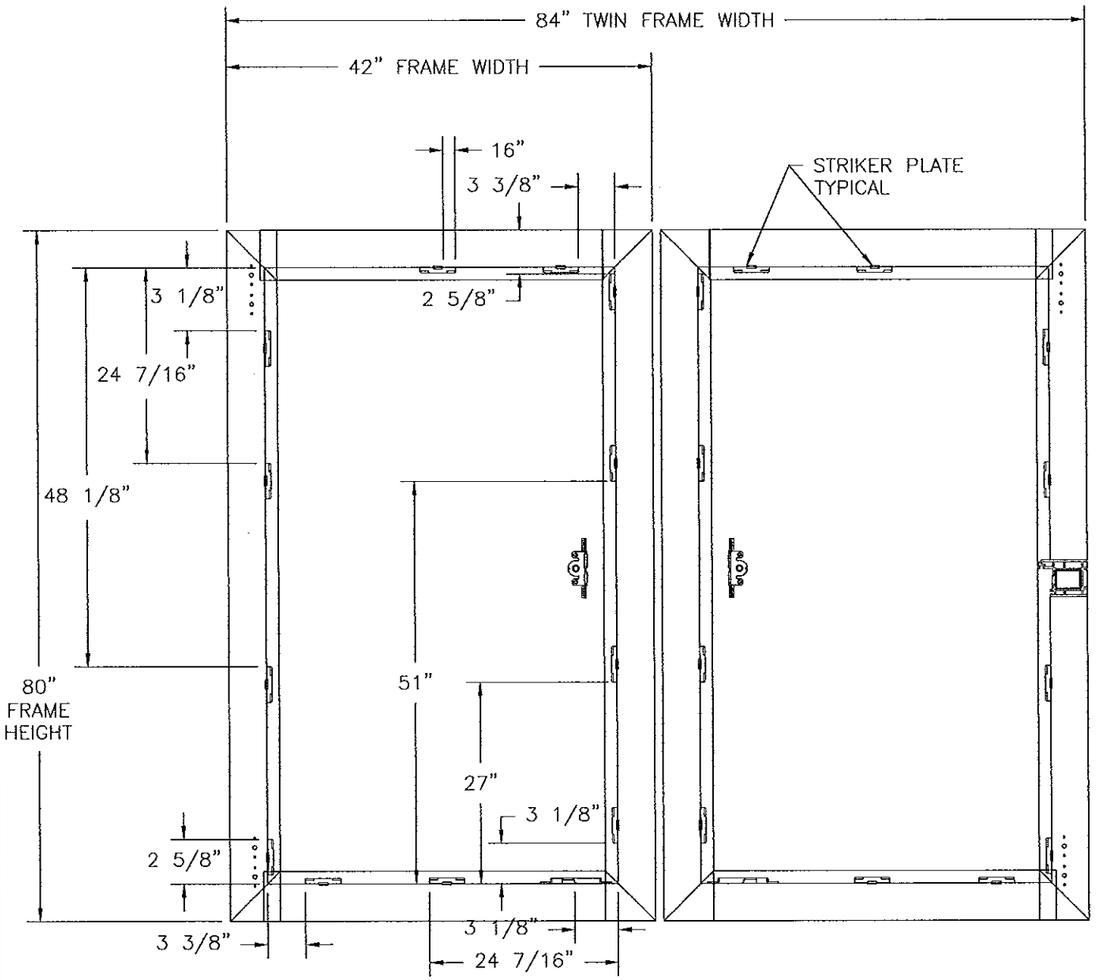

FRAME HARDWARE LAYOUT

TWIN UNIT SIEGENIA HARDWARE INTERIOR VIEW

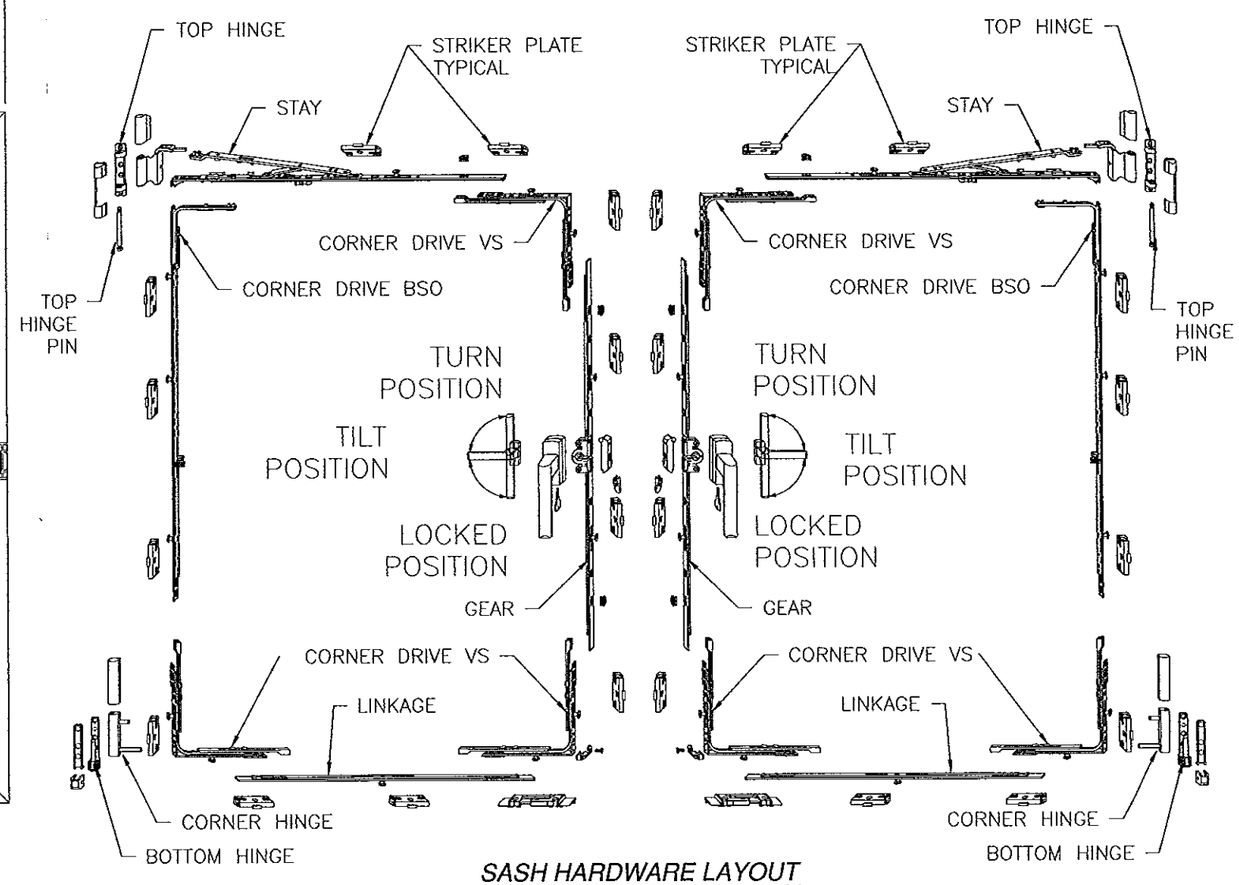

SASH HARDWARE LAYOUT

TWIN UNIT SIEGENIA HARDWARE INTERIOR VIEW

SIGNED: 02/18/2013

PRODUCT REVISED
as complying with the Florida
Building Code
Acceptance No 13-0321.10
Expiration Date Nov. 04, 2015
By Manuel Diaz
Miami Dade Product Control

WinDoor INCORPORATED
7500 AMSTERDAM DRIVE
ORLANDO, FL 32832
Phone: 407.481.8400
Fax: 407.481.0505
www.windoorinc.com

SERIES V-100 PVC DUAL ACTION TILT-TURN
WINDOW - LARGE MISSILE IMPACT
TWIN SIEGENIA HARDWARE LAYOUT

DRAWN:	DWG NO.	REV
TJH	08-00991	B
SCALE NTS	DATE 05/18/10	SHEET 22 OF 23

LUIS R. LOMAS
LICENSE
No. 62614
STATE OF
FLORIDA
PROFESSIONAL ENGINEER

REVISIONS			
REV	DESCRIPTION	DATE	APPROVED
A	PER DADE LETTER DATED OCT. 4, 2010	10/07/10	R.L.
B	ADDED ALUMINUM REINFORCED OPTION	01/22/13	R.L.

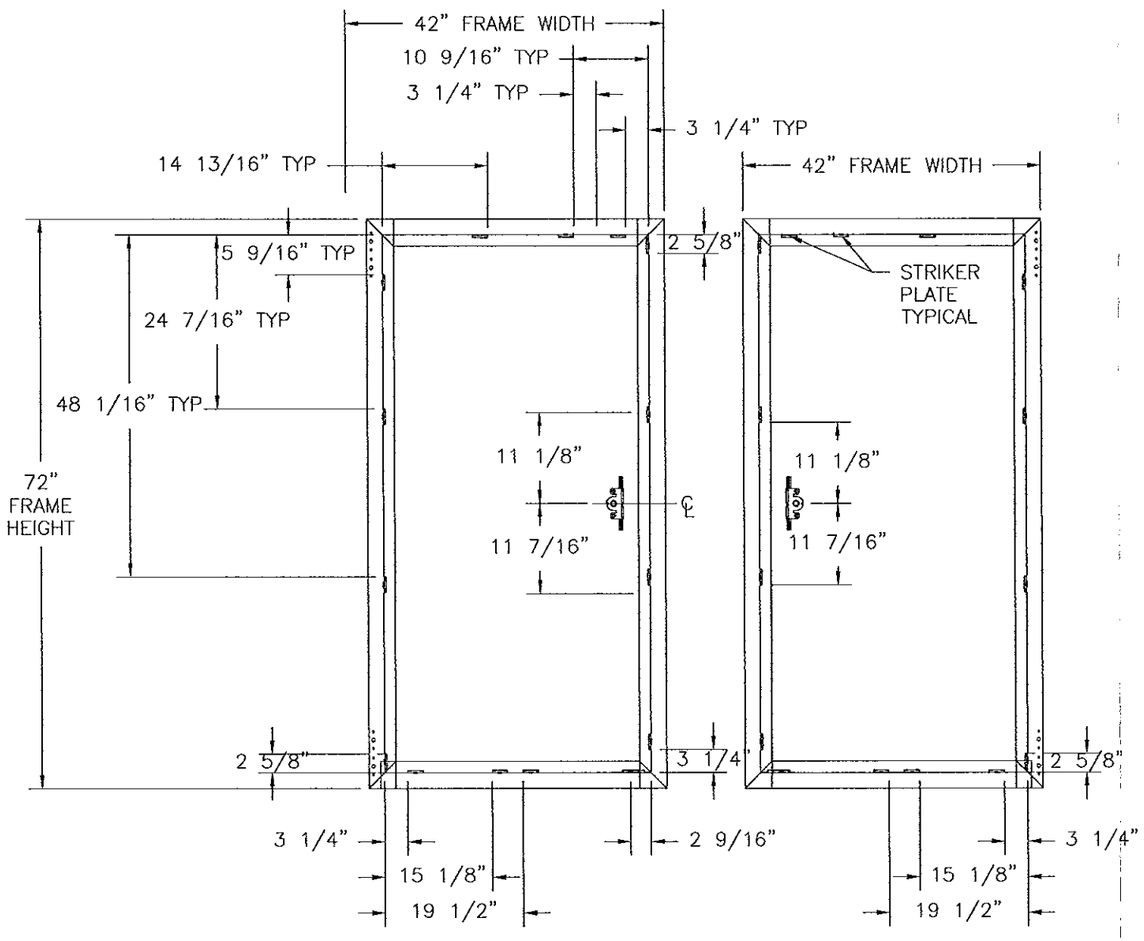

FRAME HARDWARE LAYOUT

TWIN UNIT SIEGENIA HARDWARE INTERIOR VIEW

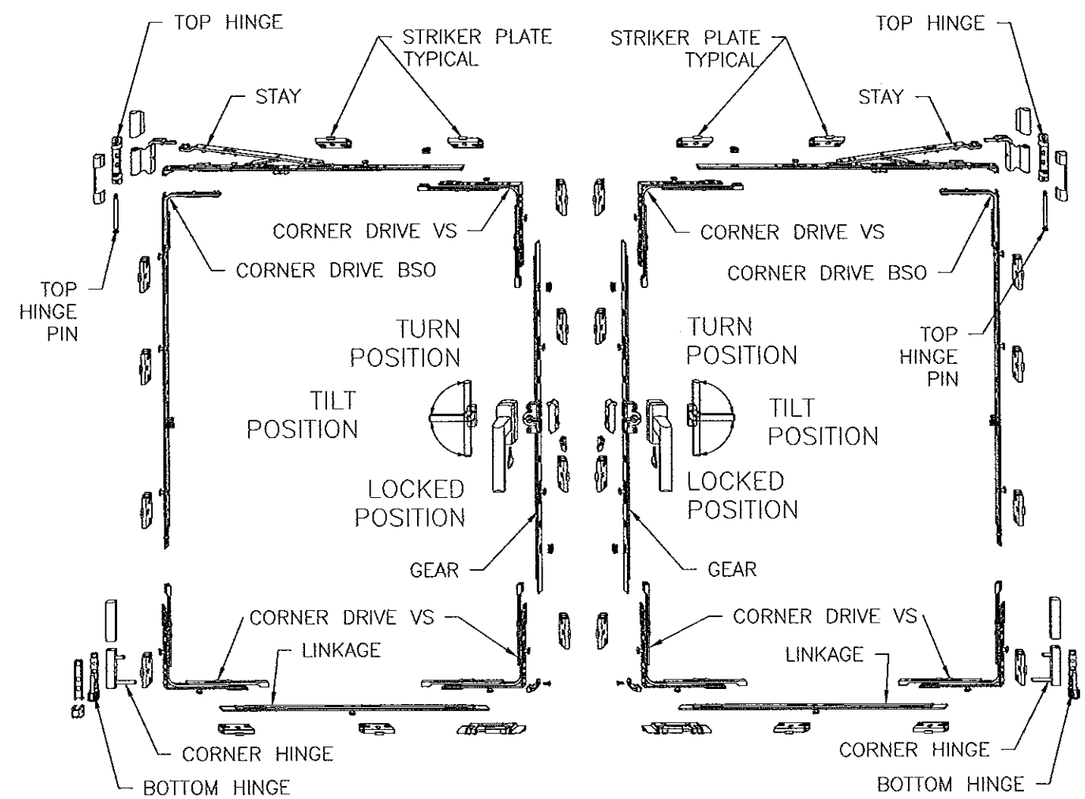

SASH HARDWARE LAYOUT

TWIN UNIT SIEGENIA HARDWARE INTERIOR VIEW

SIGNED: 02/18/2013

PRODUCT REVISED
as complying with the Florida Building Code
Acceptance No 13-0321.10
Expiration Date Oct. 24, 2015
By Manuel Perez
Miami-Dade Product Control

WinDoor INCORPORATED
7500 AMSTERDAM DRIVE
ORLANDO, FL 32832
Phone: 407.481.8400
Fax: 407.481.0505
www.windoorinc.com

SERIES V-100 PVC DUAL ACTION TILT-TURN
WINDOW - LARGE MISSILE IMPACT
TWIN SIEGENIA HARDWARE LAYOUT

DRAWN:	DWG NO.	REV
TJH	08-00991	B
SCALE NTS	DATE 05/18/10	SHEET 23 OF 23

LUIS R. LOMAS LICENSE No. 62514 STATE OF FLORIDA PROFESSIONAL ENGINEER