MIAMI-DADE COUNTY
PRODUCT CONTROL SECTION
11805 SW 26 Street, Room 208
Miami, Florida 33175-2474
T (786) 315-2590 F (786) 315-2599
www.miamidade.gov/economy

DEPARTMENT OF REGULATORY AND ECONOMIC RESOURCES (RER)
BOARD AND CODE ADMINISTRATION DIVISION

NOTICE OF ACCEPTANCE (NOA)

Buffelen Woodworking, Inc.
1901 Taylor Way
Tacoma, WA 98421

SCOPE:

This NOA is being issued under the applicable rules and regulations governing the use of construction materials. The documentation submitted has been reviewed and accepted by Miami-Dade County RER - Product Control Section to be used in Miami Dade County and other areas where allowed by the Authority Having Jurisdiction (AHJ).

This NOA shall not be valid after the expiration date stated below. The Miami-Dade County Product Control Section (In Miami Dade County) and/or the AHJ (in areas other than Miami Dade County) reserve the right to have this product or material tested for quality assurance purposes. If this product or material fails to perform in the accepted manner, the manufacturer will incur the expense of such testing and the AHJ may immediately revoke, modify, or suspend the use of such product or material within their jurisdiction. RER reserves the right to revoke this acceptance, if it is determined by Miami-Dade County Product Control Section that this product or material fails to meet the requirements of the applicable building code.

This product is approved as described herein, and has been designed to comply with the Florida Building Code, including the High Velocity Hurricane Zone.

DESCRIPTION: Series 10'0" Opaque Outswing Wood Doors- L.M.I.

APPROVAL DOCUMENT: Drawing No. **BUF0022 Rev D**, titled Series "10 Ft. Opaque Wood Outswing Entry Door", sheets 1 through 16 of 16, dated 12/28/10 and last revised on 03/18/13, prepared by PTC, LLC, signed and sealed by Robert J. Amoruso, P.E., bearing the Miami-Dade County Product Control Revision stamp with the Notice of Acceptance number expiration date by the Miami-Dade County Product Control Section.

MISSILE IMPACT RATING: Large Missile Impact Resistant

Limitation: Min Ft=1650 psi tensile strength for composite threshold material, as applicable is required.

LABELING: Each unit shall bear a permanent label with the manufacturer's name or logo, city, state and series and following statement: "Miami-Dade County Product Control Approved", noted herein.

RENEWAL of this NOA shall be considered after a renewal application has been filed and there has been no change in the applicable building code negatively affecting the performance of this product.

TERMINATION of this NOA will occur after the expiration date or if there has been a revision or change in the materials, use, and/or manufacture of the product or process. Misuse of this NOA as an endorsement of any product, for sales, advertising or any other purposes shall automatically terminate this NOA. Failure to comply with any section of this NOA shall be cause for termination and removal of NOA.

ADVERTISEMENT: The NOA number preceded by the words Miami-Dade County, Florida, and followed by the expiration date may be displayed in advertising literature. If any portion of the NOA is displayed, then it shall be done in its entirety.

INSPECTION: A copy of this entire NOA shall be provided to the user by the manufacturer or its distributors and shall be available for inspection at the job site at the request of the Building Official.

This NOA **revises & renews NOA # 10-0505.04** and consists of this page 1 and evidence pages E-1 & E-2, as well as approval document mentioned above.

The submitted documentation was reviewed by **Ishaq I. Chanda, P.E.**

MIAMI-DADE COUNTY APPROVED

5/23/13

NOTICE OF ACCEPTANCE: EVIDENCE SUBMITTED

A. DRAWINGS (submitted under file # **10-0505.04**)

1. Manufacturer's die drawings and sections.
2. Drawing No. **BUF0022 Rev D**, titled Series "10 Ft. Opaque Wood Outswing Entry Door", sheets 1 through 16 of 16, dated 12/28/10 and last revised on 03/18/13, prepared by PTC, LLC, signed and sealed by Robert J. Amoruso, P.E.

Note: The revision consist of only editorial changes from previous approval.

B. TESTS (submitted under file # **10-0505.04 / #070803.04**)

1. Test reports on: 1) Air Infiltration Test, per FBC, TAS 202-94
   2) Uniform Static Air Pressure Test, Loading per FBC TAS 202-94
   3) Water Resistance Test, per FBC, TAS 202-94
   4) Large Missile Impact Test per FBC, TAS 201-94
   5) Cyclic Wind Pressure Loading per FBC, TAS 203-94
   6) Forced Entry Test, per FBC 2411 3.2.1, TAS 202-94

   Along with marked-up drawings and installation diagram, prepared by National Certified Testing Laboratories, Test Report No. **NCTL-210-3260-1**, dated 01/15/07, signed and sealed by Gerard J. Ferrara, P.E.

C. CALCULATIONS (submitted under file # **10-0505.04 / #070803.04**)

1. Anchor verification dated 01/14/11through threshold composite, prepared by PTC, LLC, signed and sealed by Robert J. Amoruso, P.E.
2. Anchor verification calculations and structural analysis, complying with FBC-2004, 2005, 2006 and 2007 Supplements, prepared by PTC, LLC, dated 07/25/07 with the latest revision dated 03/03/08, signed and sealed by Marlon S. Hampton, P.E.
3. Glazing complies w/ ASTME-1300-02 & -04

D. QUALITY ASSURANCE

1. Miami Dade Department of Regulatory and Economic Resources (RER).

E. MATERIAL CERTIFICATIONS

1. Tensile test report No. 200707982 dated 09/10/27, issued by IMR test lab per ASTMD-638.03 for Endura composite, signed by Stan Deforest.

F. STATEMENTS (except statement item #1, all other items submitted as referenced below)

1. Statement letter of conformance to FBC 2010 , letter of no financial interest and only editorial changes, prepared by PTC, LLC dated 03/18/13, signed and sealed by Robert J. Amoruso, P.E.
2. Statement letter of conformance FBC 2007 and letter of no financial interest, prepared by PTC, LLC dated 10/19/10, signed and sealed by Robert J. Amoruso, P.E. (submitted under file # # **10-0505.04**)
3. Statement letter of conformance and no financial interest, dated July 25, 2007, signed and sealed by Marlon S. Hampton, P.E. (submitted under file # # **07-0803.04**)
4. Test lab compliance letter, as part of above test report.

Ishaq I. Chanda

Ishaq I. Chanda, P.E.
Product Control Examiner
NOA No. 13-0326.13
Expiration Date: March 27, 2018
Approval Date: May 30, 2013

F. STATEMENTS (continue): (submitted under file # **10-0505.04/ #070803.04**)

5. Statement letter dated Oct 20, 2010 issued by Buffelen woodworking Co. legally purchased all assets and rights to McPhillips Mfg. of NOA (s) **#07-0803.03** & **#07-0803.04** and requesting transferring NOA(s) to Buffelen Woodworking, signed by Joe D. Guizzetti (CEO, Buffelen).
6. Statement letter dated Dec. 20, 2010 issued by McPhillips Mfg. Co.stating that it has legally sold all assets and rights, including machinery and equipments of NOA (s) **#07-0803.03 & #07-0803.04** to Buffelen Woodworking Inc. and these NOA(s) to be **rescinded**, signed by J. Manning McPhillips.
7. Notarized Bill of Sale /Purchase agreement dated 12-01-09 between McPhillips Mfg Co. (seller) and Buffelen Woodworking, signed by Manning McPhillips, president and Joe Guizzetti, President respectively.

G. OTHER

1. This NOA **revises** & **renews** NOA # **10-0505.04**, expired on March 27, 2013.
2. Test proposal **#05-0359R** dated 12/22/05 approved by BCCO.

Ishaq I. Chanda

Ishaq I. Chanda, P.E.
Product Control Examiner
NOA No. 13-0326.13
Expiration Date: March 27, 2018
Approval Date: May 30, 2013

BUFFELEN WOODWORKING CO.

10 FT. OPAQUE WOOD OUTSWING ENTRY DOOR

GENERAL NOTES:

1. THE PRODUCT SHOWN HEREIN IS DESIGNED TO COMPLY WITH THE 2007 AND 2010 FLORIDA BUILDING CODE (FBC) INCLUDING HIGH VELOCITY HURRICANE ZONE (HVHZ) REQUIREMENTS. (D)
2. ADEQUACY OF THE EXISTING STRUCTURAL CONCRETE/MASONRY AND WOOD FRAMING AS A MAIN WIND FORCE RESISTING SYSTEM CAPABLE OF WITHSTANDING AND TRANSFERRING APPLIED PRODUCT LOADS TO THE FOUNDATION IS THE RESPONSIBILITY OF THE ENGINEER OR ARCHITECT OF RECORD FOR THE PROJECT OF INSTALLATION.
3. 1X AND 2X BUCKS (WHEN USED) SHALL BE DESIGNED AND ANCHORED TO PROPERLY TRANSFER ALL LOADS TO THE STRUCTURE. BUCK DESIGN AND INSTALLATION IS THE RESPONSIBILITY OF THE ENGINEER OR ARCHITECT OF RECORD FOR THE PROJECT OF INSTALLATION.
4. THE INSTALLATION DETAILS DESCRIBED HEREIN ARE GENERIC AND MAY NOT REFLECT ACTUAL CONDITIONS FOR A SPECIFIC SITE. IF SITE CONDITIONS CAUSE INSTALLATION TO DEVIATE FROM THE REQUIREMENTS DETAILED HEREIN, THEN THE BUILDING OFFICIAL MAY ELECT ONE OF THE FOLLOWING OPTIONS:
   A. OUTSIDE HVHZ: REQUIRE THAT A LICENSED ENGINEER OR ARCHITECT PREPARE AND SUBMIT SITE SPECIFIC DOCUMENTS FOR USE WITH THIS DOCUMENT.
   B. INSIDE HVHZ: REQUIRE THAT A ONE-TIME SITE SPECIFIC APPROVAL BE APPLIED FOR AND OBTAINED FROM THE BUILDING CODE AUTHORITY HAVING JURISDICTION.
5. IN AREAS WHERE WINDBOURNE DEBRIS PROTECTION REQUIREMENTS EXIST, USE OF AN IMPACT PROTECTION SYSTEM IS NOT REQUIRED FOR THE PRODUCT(S) HEREIN.
6. DOOR FRAME AND PANEL MATERIAL:
   FRAME HEAD & JAMBS - S.P. CEDAR
   FRAME THRESHOLD - ALUMINUM OR MAHOGANY
   DOOR STILES & RAILS - S.P. CEDAR
   ASTRAGAL - S.P. CEDAR
   OPAQUE DOOR PANELS - MARINE PLYWOOD
   AB CORE W/ MATCH WOOD FACES.
7. SEE SHEET 13 FOR INFILL DETAILS. (D)
8. DESIGNATIONS "X" AND "O" STAND FOR THE FOLLOWING:
   A. X: OPERABLE PANEL
   B. O: FIXED PANEL
9. A 1/3 INCREASE IN ALLOWABLE STRESS FOR WIND LOADS WAS NOT USED IN THE DESIGN OF THE PRODUCT(S) SHOWN HEREIN.
10. WINDLOAD DURATION FACTOR (Cd) OF 1.6 HAS BEEN USED FOR WOOD ANCHOR DESIGN.

GENERAL NOTES (CONT.):

11. EGRESS REQUIREMENTS TO BE REVIEWED BY AUTHORITY HAVING JURISDICATION

INSTALLATION NOTES:

1. ONE (1) INSTALLATION ANCHOR IS REQUIRED AT EACH ANCHOR LOCATION SHOWN.
2. SHIM AS REQUIRED AT EACH INSTALLATION ANCHOR WITH LOAD BEARING SHIMS. MAXIMUM ALLOWABLE SHIM SIZE OF 1/4 INCH. SHIM WHERE SPACE OF 1/16 INCH OR GREATER OCCURS. SHIMS SHALL BE CONSTRUCTED OF HIGH DENSITY PLASTIC OR BETTER.
3. FOR INSTALLATION INTO WOOD FRAMING, USE #12 WOOD SCREWS OF SUFFICIENT LENGTH TO ACHIEVE 1 1/2 INCH MINIMUM EMBEDMENT.
4. FOR INSTALLATION THROUGH 1X BUCK TO CONCRETE/ MASONRY OR DIRECTLY INTO CONCRETE/ MASONRY, USE 1/4 INCH ITW TAPCONS OF SUFFICIENT LENGTH TO ACHIEVE 1 1/4 INCH MINIMUM EMBEDMENT.
5. MINIMUM EMBEDMENT AND EDGE DISTANCE EXCLUDE WALL FINISHES, (INCLUDING BUT NOT LIMITED TO STUCCO, FOAM, BRICK VENEER, SHEATHING AND SIDING).
6. (D) WOOD SCREWS SHALL BE MADE OF CARBON STEEL WITH BENDING YIELD STRENGTHS MEETING THE REQUIREMENTS OF ANSI/AF&PA NDS-2005, APPENDIX I.
7. INSTALLATION ANCHORS AND ASSOCIATED HARDWARE MUST BE MADE OF CORROSION RESISTANT MATERIAL OR HAVE A CORROSION RESISTANT COATING.
8. (D) INSTALL WOOD SCREWS IN ACCORDANCE WITH THE PROVISIONS OF ANSI/AF&PA NDS-2005.
9. INSTALLATION ANCHORS SHALL NOT BE USED IN SUBSTRATES WITH STRENGTHS LESS THAN THE MINIMUM STRENGTH SPECIFIED BELOW.
10. INSTALLATION ANCHOR CAPACITIES FOR PRODUCTS HEREIN ARE BASED ON SUBSTRATE MATERIALS WITH THE FOLLOWING PROPERTIES:
    A. WOOD - MINIMUM SPECIFIC GRAVITY OF 0.42.
    B. CONCRETE - MINIMUM COMPRESSIVE STREGNTH OF 3192 PSF.
    C. MASONRY BLOCK - MINIMUM NET COMPRESSIVE STRENGTH OF 1900 PSI

DESIGN PRESSURE RATING (PSF)		
WHERE WATER INFILLTRATION REQUIREMENT IS NEEDED	WHERE WATER INFILLTRATION REQUIREMENT IS NOT NEEDED	IMPACT RATING
±50.0	±50.0	LARGE AND SMALL MISSLE IMPACT

(D) TABLE OF CONTENTS

SHEET	DESCRIPTION
1	NOTES
2	ELEVATION & ANCHOR LAYOUT
3	ELEVATION & ANCHOR LAYOUT
4	ELEVATION & ANCHOR LAYOUT
5	ELEVATION & ANCHOR LAYOUT
6	VERTICAL SECTIONS
7	VERTICAL SECTIONS
8	VERTICAL SECTIONS
9	HORIZONTAL SECTIONS
10	HORIZONTAL SECTIONS
11	HORIZONTAL SECTIONS
12	COMPONENTS
13	BILL OF MATERIALS & GLAZING DETAILS
14	DOOR PANEL CONFIGURATIONS
15	SURFACE BOLT DETAILS
16	FRAME CORNER DETAILS

REV	DESCRIPTION	DATE	BY
D	UPDATE TO 2010 FBC RENEW NOA	03/18/13	RJA
C	Per Miami Dade Comments	12/28/10	RJA
B	MANUF. NAME CHANGE	10/18/10	RJA

PROJECT #413-0105

BUFFELEN WOODWORKING CO., INC.
1901 TAYLOR WAY
TACOMA, WA 98421

TITLE: 10 FT. OPAQUE WOOD OUTSWING ENTRY DOOR NOTES

DRAWN BY: RJA | DATE: 12/28/10
SCALE: N.T.S. | DRAWING NO: BUF0022
REV: D | SHEET: 1 OF 16

PREPARED BY:
PTC PRODUCT DESIGN GROUP, LLC
P.O. Box 520775
Longwood, FL 32752-0775
FBPE Cert. of Auth. No. 29835
Phone: 321.690.1788
Fax: 321.690.1789
Email: info@ptc-corp.com

Robert J. Amoruso, P.E.
Florida P.E. No. 49752

ROBERT JAMES AMORUSO LICENSE No 49752 STATE OF FLORIDA PROFESSIONAL ENGINEER
3/18/13

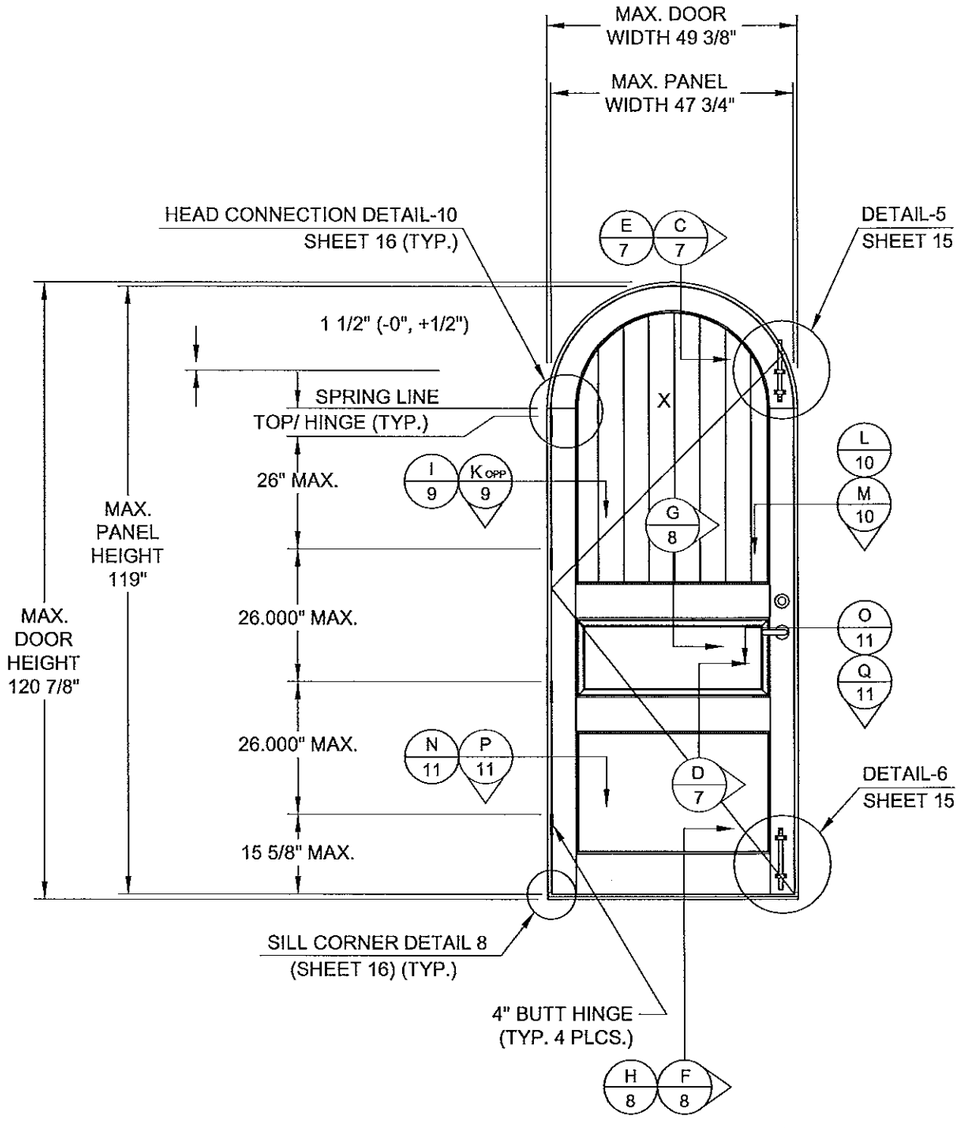

ELEVATION 1

INTERIOR VIEW

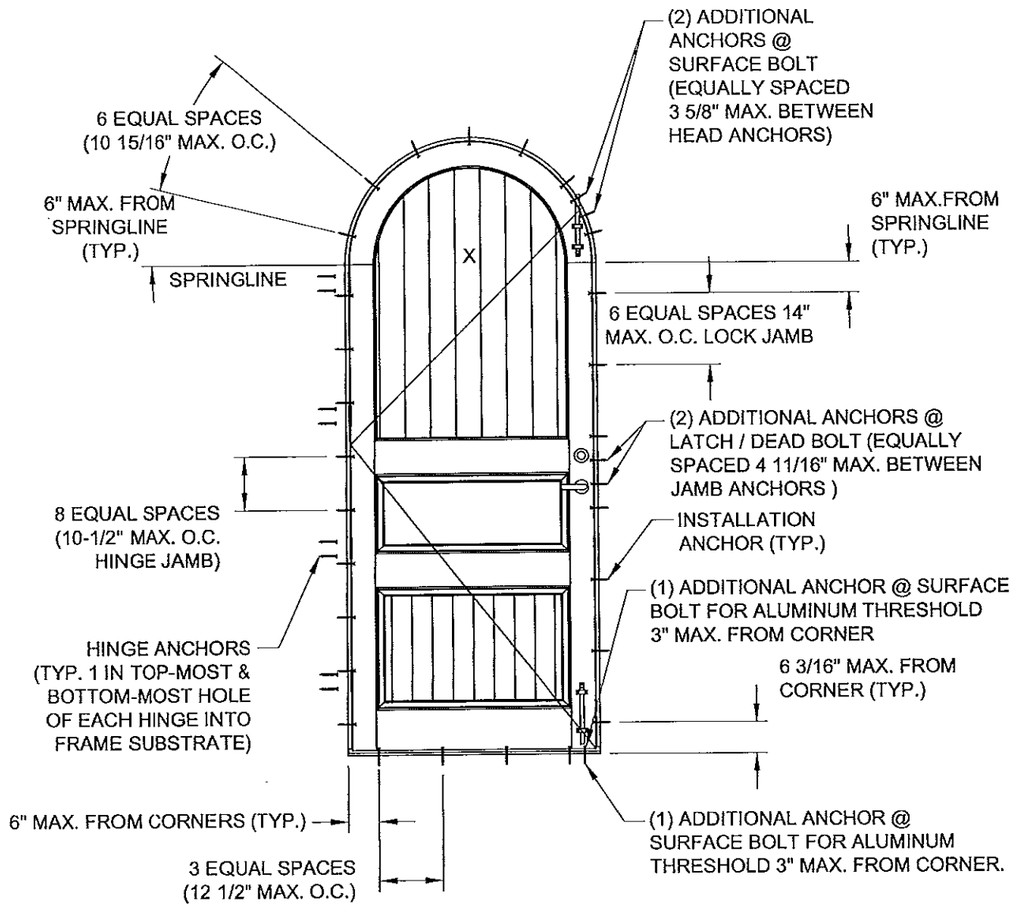

ANCHOR LAYOUT 1

(NOTE: NO INSTALLATION ANCHORS TO BE LOCATED CLOSER THAN 3" O.C.)

ROUND TOP - SINGLE OUTSWING DOOR

PROJECT #413-0105			
D	UPDATE TO 2010 FBC RENEW NOA	03/18/13	RJA
C	Per Miami Dade Comments	12/28/10	RJA
B	MANUF. NAME CHANGE	10/18/10	RJA
REV	DESCRIPTION	DATE	BY

BUFFLEN WOODWORKING CO., INC.
1901 TAYLOR WAY
TACOMA, WA 98421

TITLE: 10 FT. OPAQUE WOOD OUTSWING ENTRY DOOR ELEVATION AND ANCHOR LAYOUT

DRAWN BY: RJA | DATE: 12/28/10
SCALE: N.T.S. | DRAWING NO: BUF0022
REV: D | SHEET: 2 OF 16

PREPARED BY:
PTC PRODUCT DESIGN GROUP, LLC
P.O. Box 520775
Longwood, FL 32752-0775
FBPE Cert. of Auth. No. 25935
Phone: 321.800.1788
Fax: 321.800.1788
Email: info@ptc-corp.com

Robert J. Amoruso, P.E.
Florida P.E. No. 49752

ROBERT JAMES AMORUSO LICENSE No 49752 STATE OF FLORIDA PROFESSIONAL ENGINEER
3/18/13

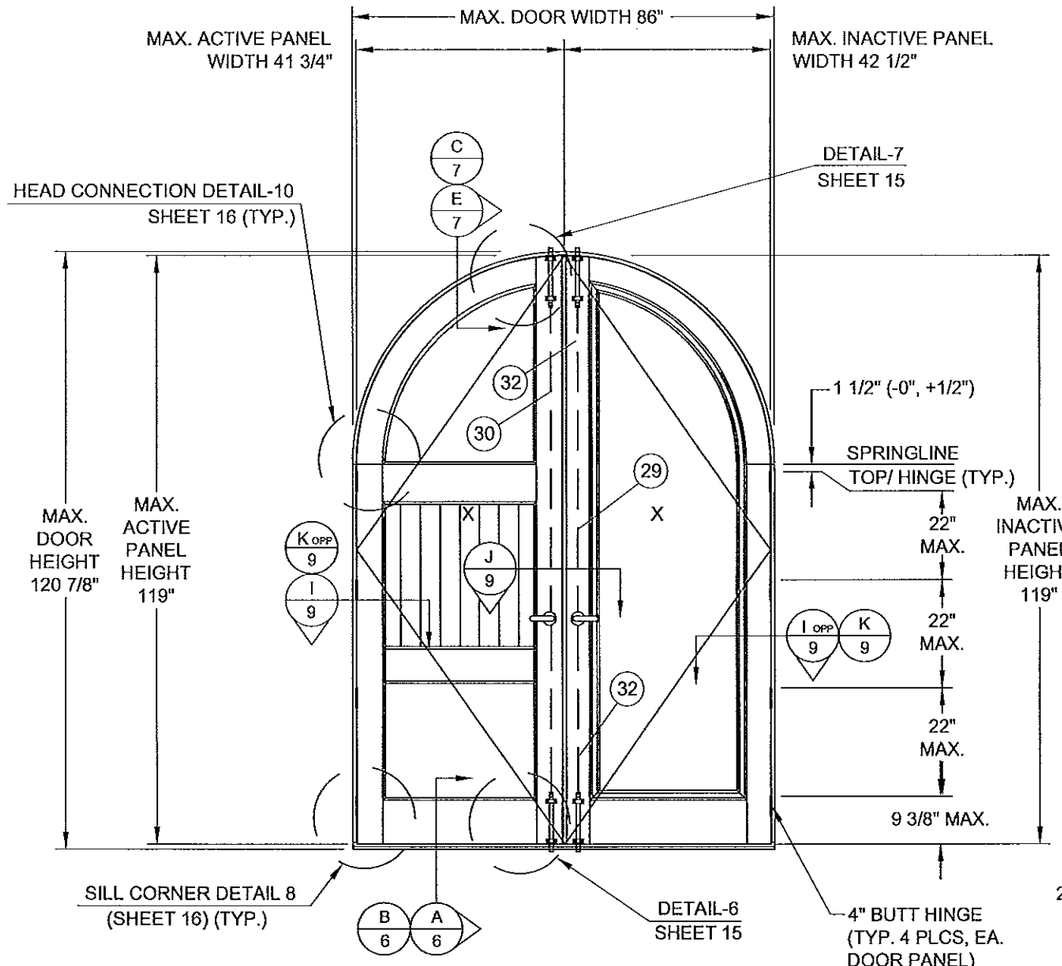

ELEVATION 2

INTERIOR VIEW

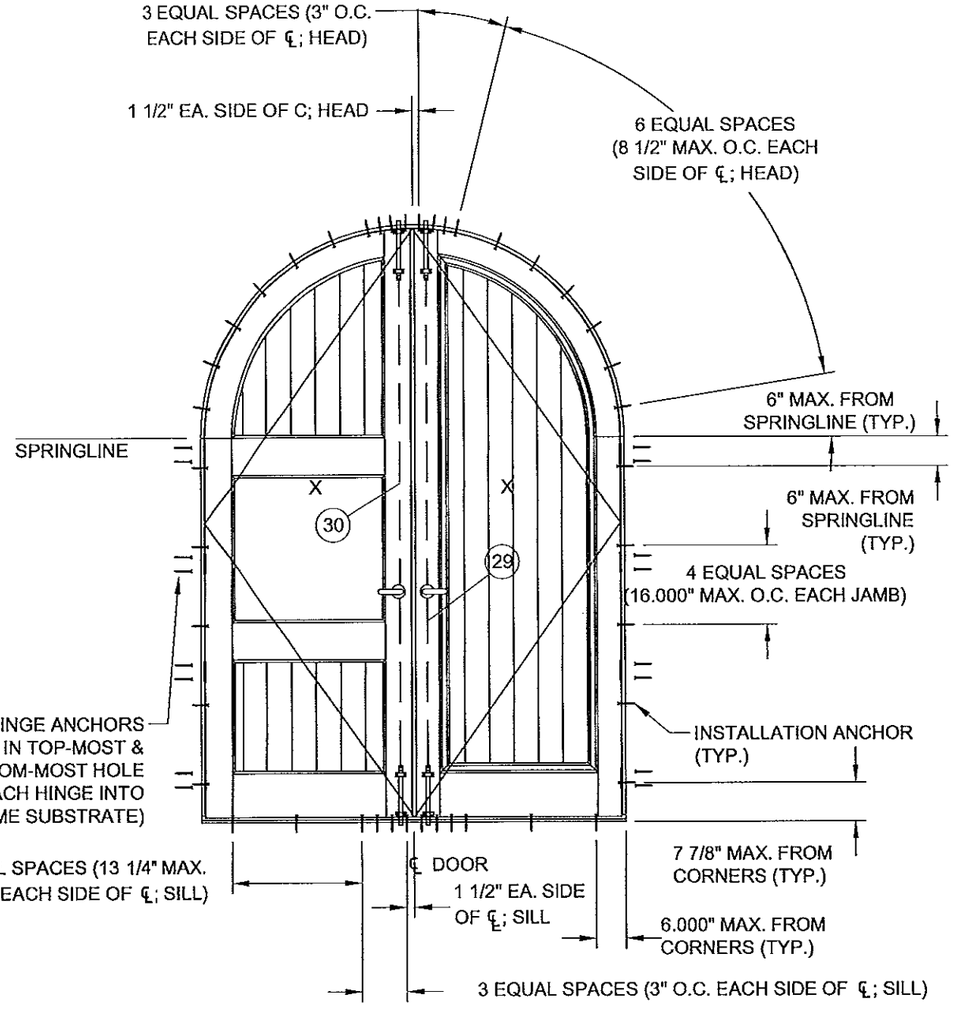

ANCHOR LAYOUT 2

(NOTE: NO INSTALLATION ANCHORS TO BE LOCATED CLOSER THAN 3" O.C.)

ROUND TOP - DOUBLE OUTSWING DOOR

PROJECT #413-0105	REV	DESCRIPTION	DATE	BY
	D	UPDATE TO 2010 FBC RENEW NOA	03/18/13	RJA
	C	Per Miami Dade Comments	12/28/10	RJA
	B	MANUF. NAME CHANGE	10/18/10	RJA

BUFFLEN WOODWORKING CO., INC.
1901 TAYLOR WAY
TACOMA, WA 98421

TITLE: 10 FT. OPAQUE WOOD OUTSWING ENTRY DOOR ELEVATION AND ANCHOR LAYOUT

PREPARED BY: PTC PRODUCT DESIGN GROUP, LLC
P.O. Box 520775
Longwood, FL 32752-0775
FBPE Cert. of Auth. No. 29525
Phone: 321.690.1788
Fax: 321.690.1788
Email: info@ptc-corp.com

DRAWN BY: RJA | DATE: 12/28/10
SCALE: N.T.S. | DRAWING NO: BUF0022
REV: D | SHEET: 3 OF 16

Robert J. Amoruso, P.E.
Florida P.E. No. 49752

ROBERT JAMES AMORUSO LICENSE No 49752 STATE OF FLORIDA PROFESSIONAL ENGINEER 3/18/13

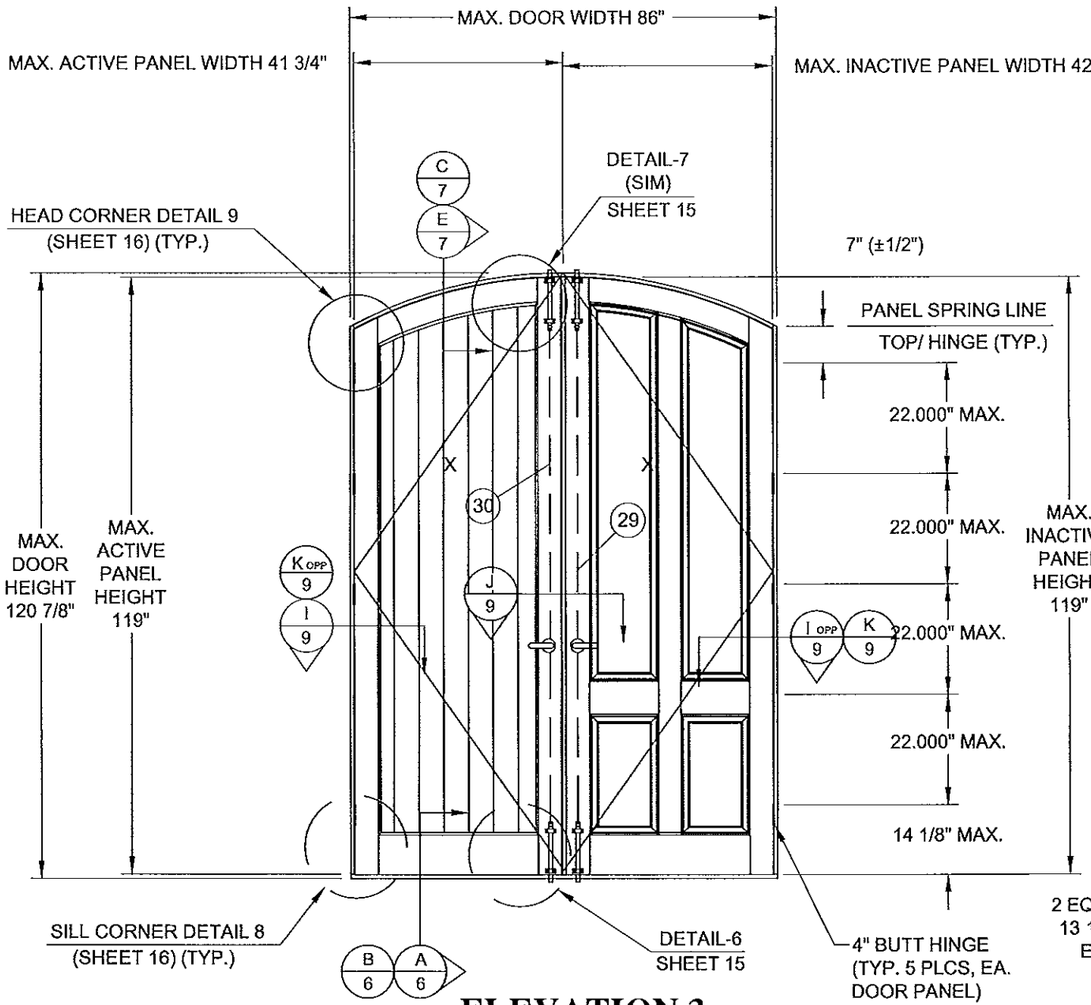

ELEVATION 3

INTERIOR VIEW

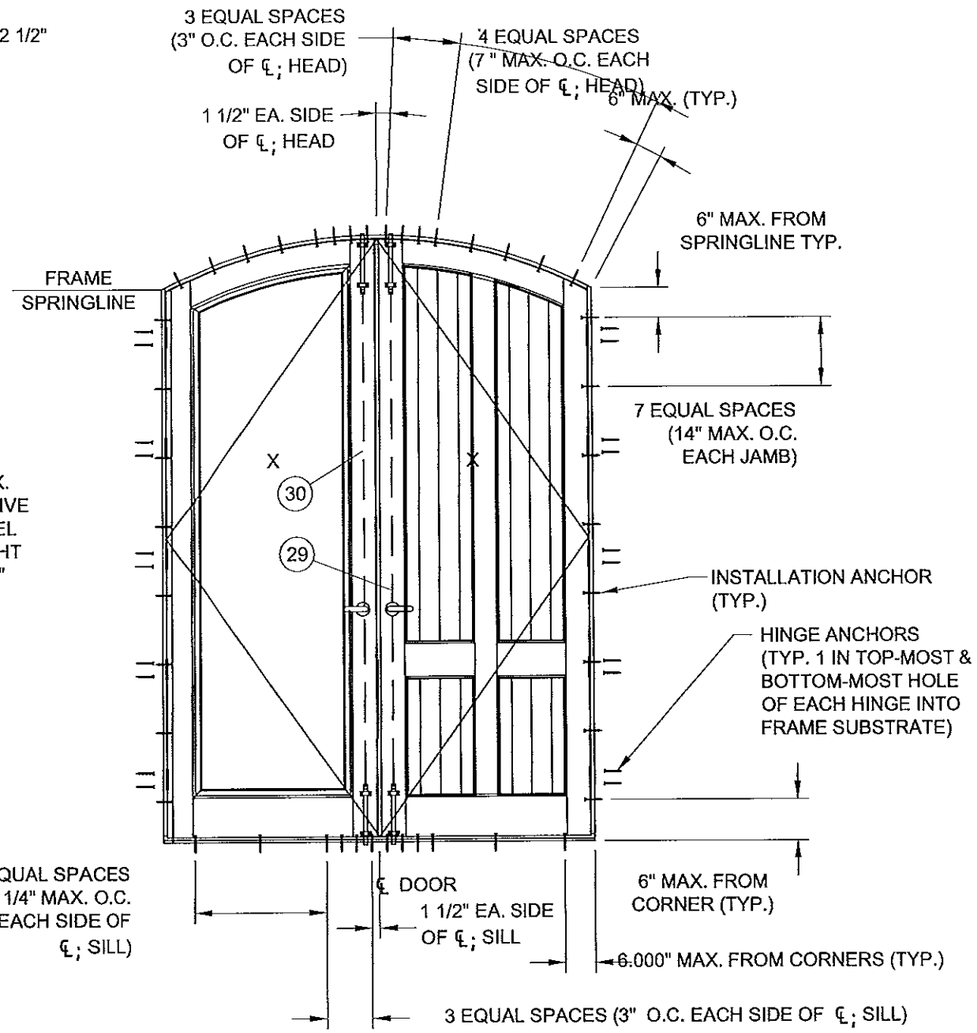

ANCHOR LAYOUT 3

(NOTE: NO INSTALLATION ANCHORS
TO BE LOCATED CLOSER THAN 3" O.C.)

TRUE ARCH - DOUBLE OUTSWING DOOR

REV	DESCRIPTION	DATE	BY
D	UPDATE TO 2010 FBC RENEW NOA	03/18/13	RJA
C	Per Miami Dade Comments	12/28/10	RJA
B	MANUF. NAME CHANGE	10/18/10	RJA

PROJECT #413-0105

BUFFLEN WOODWORKING CO., INC.
1901 TAYLOR WAY
TACOMA, WA 98421

TITLE: 10 FT. OPAQUE WOOD OUTSWING ENTRY DOOR ELEVATION AND ANCHOR LAYOUT

DRAWN BY: RJA | DATE: 12/28/10
SCALE: N.T.S. | DRAWING NO: BUF0022
REV: D | SHEET: 4 OF 16

PREPARED BY:
PTC PRODUCT DESIGN GROUP, LLC
P.O. Box 530775
Longwood, FL 32752-0775
FBPE Cert. of Auth. No. 29935
Phone: 321.690.1788
Fax: 321.690.1789
Email: info@ptc-corp.com

Robert J. Amoruso, P.E.
Florida P.E. No. 49752

ROBERT JAMES AMORUSO
LICENSE
No 49752
5/10/13
STATE OF
FLORIDA
PROFESSIONAL ENGINEER

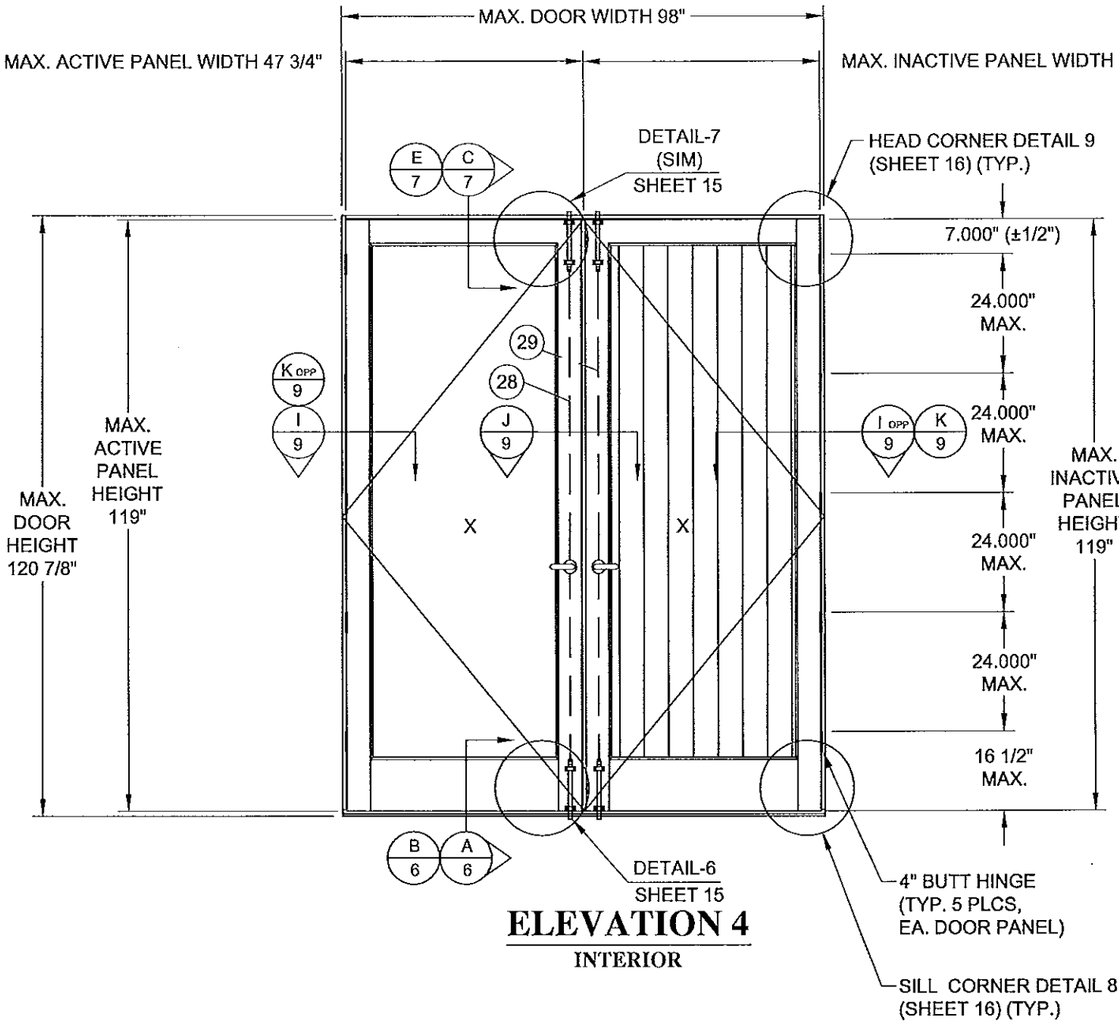

ELEVATION 4

INTERIOR

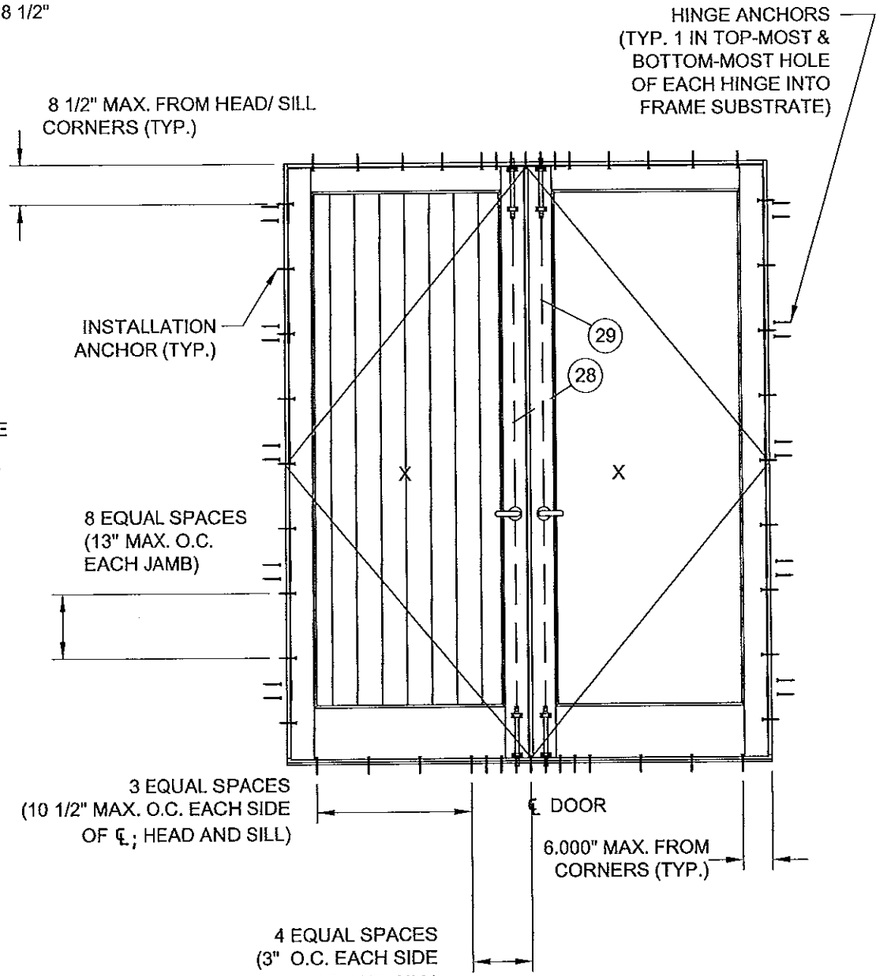

ANCHOR LAYOUT 4

(NOTE: NO INSTALLATION ANCHORS
TO BE LOCATED CLOSER THAN 3" O.C.)

SQUARE TOP - DOUBLE OUTSWING DOOR

3 EQUAL SPACES

PROJECT #413-0105

REV	DESCRIPTION	DATE	BY
D	UPDATE TO 2010 FBC RENEW NOA	03/18/13	RJA
C	Per Miami Dade Comments	12/28/10	RJA
B	MANUF. NAME CHANGE	10/18/10	RJA

BUFFLEN WOODWORKING CO., INC.
1901 TAYLOR WAY
TACOMA, WA 98421

TITLE: 10 FT. OPAQUE WOOD OUTSWING ENTRY DOOR
ELEVATION AND ANCHOR LAYOUT

DRAWN BY: RJA
DATE: 12/28/10
SCALE: N.T.S.
DRAWING NO: BUF0022
REV: D
SHEET: 5 OF 16

PREPARED BY:
PTC PRODUCT DESIGN GROUP, LLC
P.O. Box 520775
Longwood, FL 37252-0775
FBPE Cert. of Auth. No. 25935
Phone: 321.890.1788
Fax: 321.890.1789
Email: info@ptc-corp.com

Robert J. Amoruso, P.E.
Florida P.E. No. 49752

ROBERT JAMES AMORUSO
LICENSE
No 49752
3/18/13
STATE OF FLORIDA
PROFESSIONAL ENGINEER

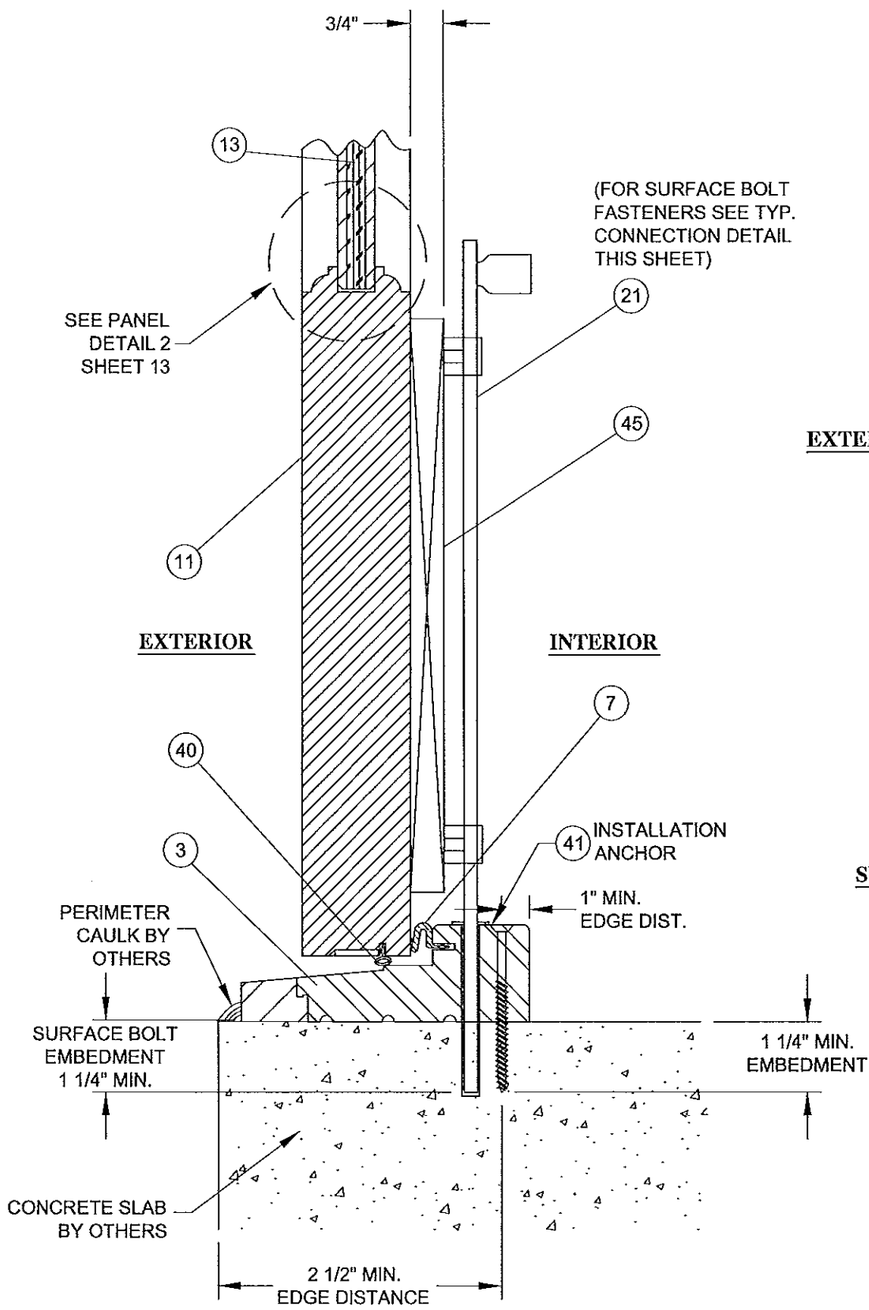

A/6 VERTICAL SECTION
CONCRETE SUBSTRATE
EURO DESIGN

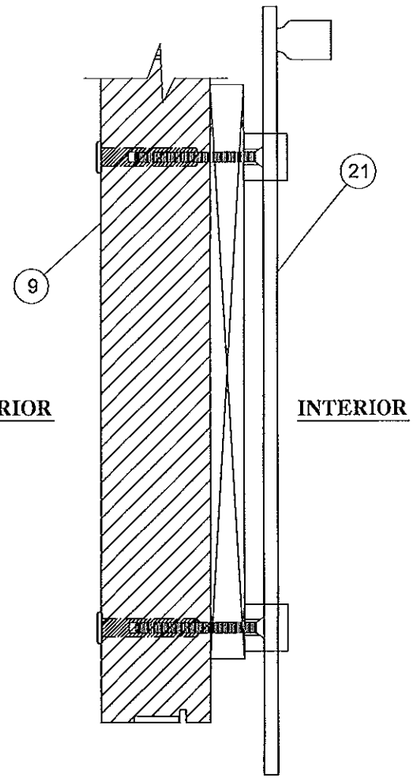

TYP. DETAIL
SURFACE BOLT CONNECTION @ STILE
(SILL CONNECTION SHOWN;
HEAD CONNECTION SIMILAR)
(REFERENCE SHEET-15 FOR
CONNECTION LOCATIONS IN STILE)

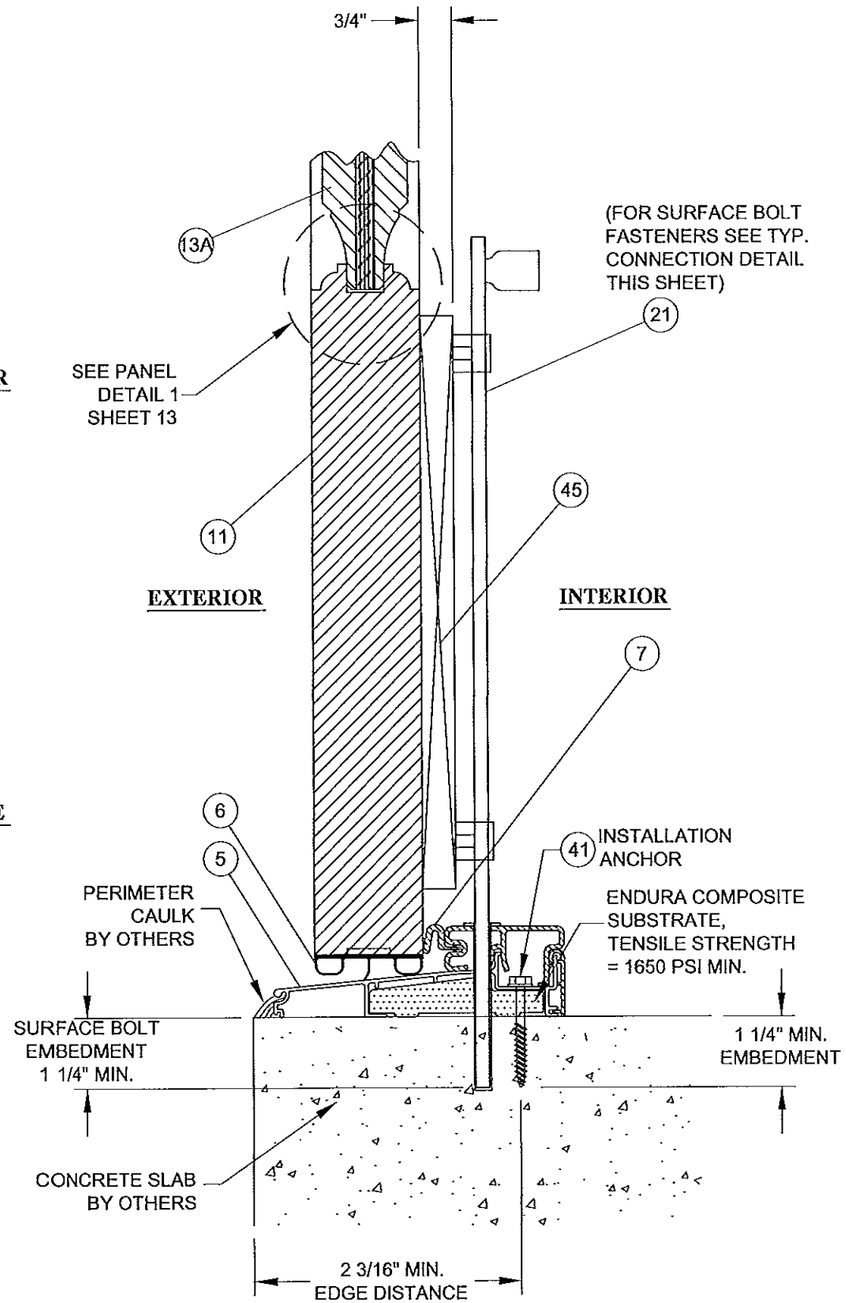

B/6 VERTICAL SECTION
CONCRETE SUBSTRATE
STANDARD DESIGN

PROJECT #413-0105			
D	UPDATE TO 2010 FBC RENEW NOA	03/18/13	RJA
C	Per Miami Dade Comments	12/28/10	RJA
B	MANUF. NAME CHANGE	10/18/10	RJA
REV	DESCRIPTION	DATE	BY

BUFFLEN WOODWORKING CO., INC.
1901 TAYLOR WAY
TACOMA, WA 98421

TITLE: 10 FT. OPAQUE WOOD OUTSWING ENTRY DOOR
VERTICAL SECTIONS

DRAWN BY: RJA | DATE: 12/28/10
SCALE: N.T.S. | DRAWING NO: BUF0022
REV: D | SHEET: 6 OF 16

PREPARED BY:
PTC PRODUCT DESIGN GROUP, LLC
P.O. Box 520775
Longwood, FL 32752-0775
FBPE Cert. of Auth. No. 25935
Phone: 321.690.1788
Fax: 321.690.1789
Email: info@ptc-corp.com

Robert J. Amoruso, P.E.
Florida P.E. No. 49752

ROBERT JAMES AMORUSO
LICENSE
No 49752
3/18/13
STATE OF
FLORIDA
PROFESSIONAL ENGINEER

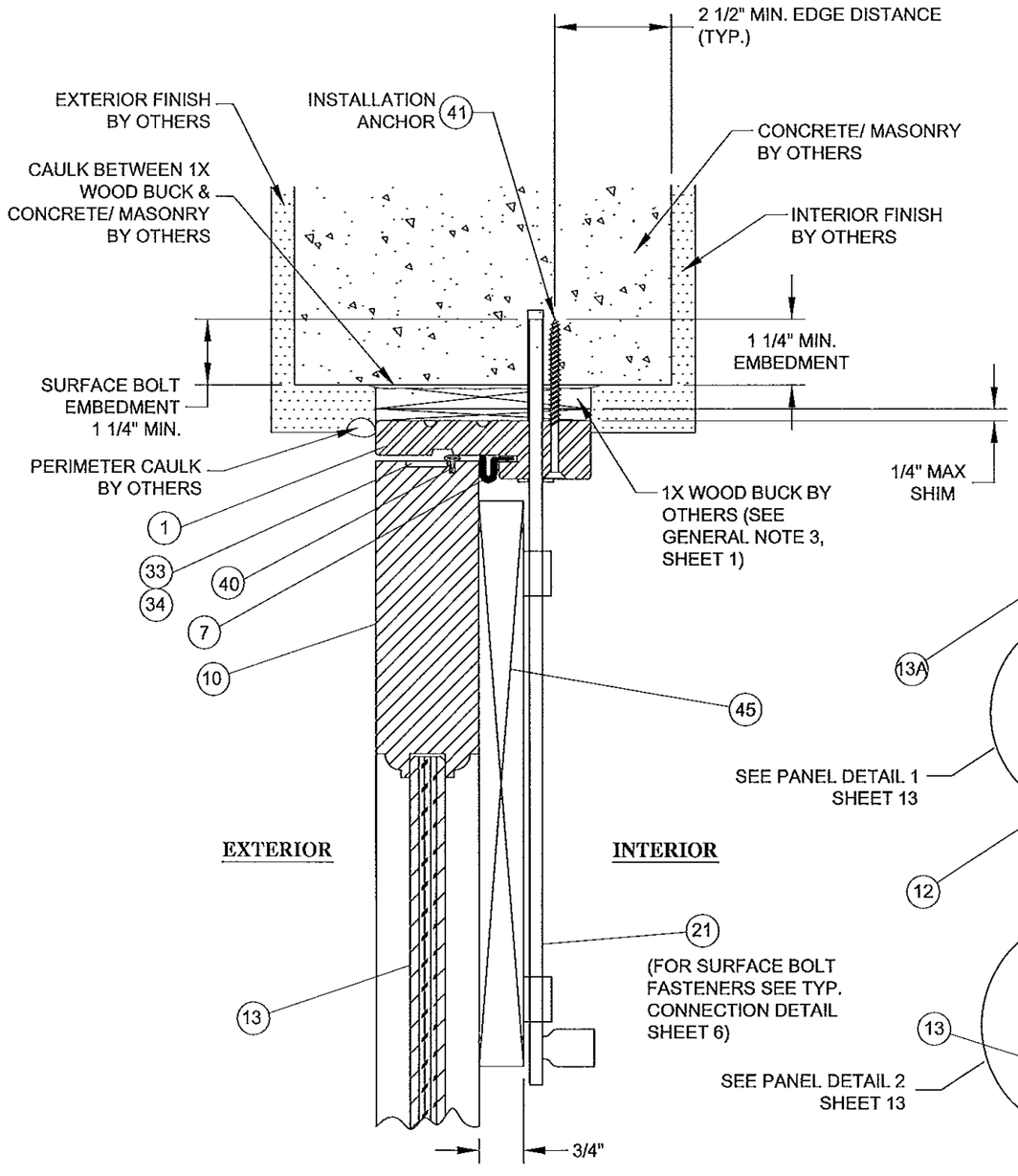

C/7 VERTICAL SECTION
CONCRETE/MASONRY SUBSTRATE
EURO DESIGN

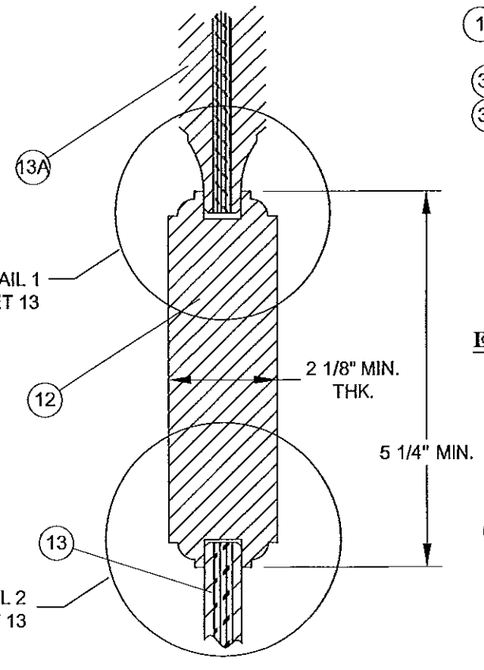

D/7 VERTICAL SECTION
INTERMEDIATE RAIL
AND PANEL INSERTS

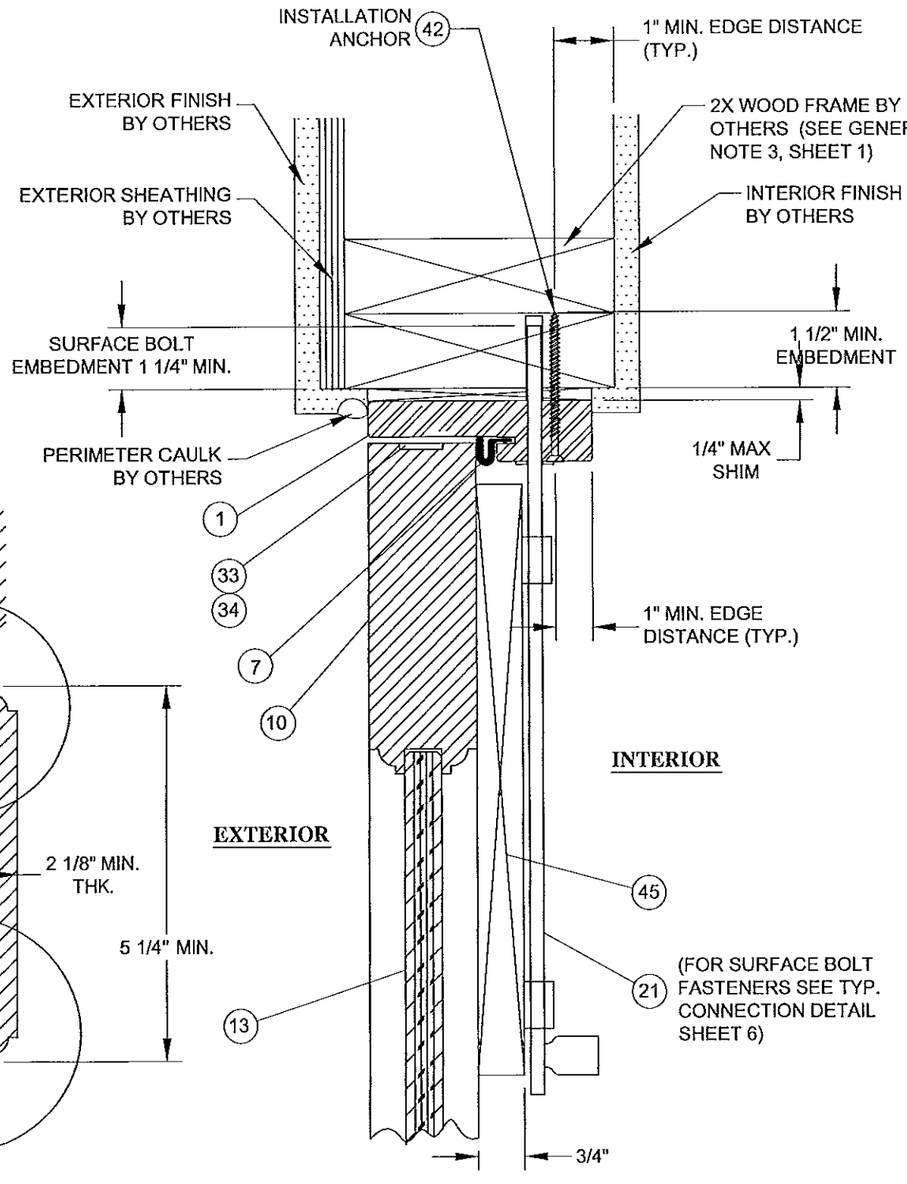

E/7 VERTICAL SECTION
WOOD FRAME SUBSTRATE
STANDARD DESIGN

PROJECT #413-0105			
D	UPDATE TO 2010 FBC RENEW NOA	03/18/13	RJA
C	Per Miami Dade Comments	12/28/10	RJA
B	MANUF. NAME CHANGE	10/18/10	RJA
REV	DESCRIPTION	DATE	BY

BUFFLEN WOODWORKING CO., INC.
1901 TAYLOR WAY
TACOMA, WA 98421

TITLE: 10 FT. OPAQUE WOOD OUTSWING ENTRY DOOR VERTICAL SECTIONS

DRAWN BY: RJA
DATE: 12/28/10
SCALE: N.T.S.
DRAWING NO: BUF0022
REV: D
SHEET: 7 OF 16

PREPARED BY:
PTC PRODUCT DESIGN GROUP, LLC
P.O. Box 520775
Longwood, FL 32752-0775
FBPE Cert. of Auth. No. 29525
Phone: 321.890.1788
Fax: 321.890.1789
Email: info@ptc-corp.com

Robert J. Amoruso, P.E.
Florida P.E. No. 49752

ROBERT JAMES AMORUSO
LICENSE
No 49752
3/18/13
STATE OF
FLORIDA
PROFESSIONAL ENGINEER

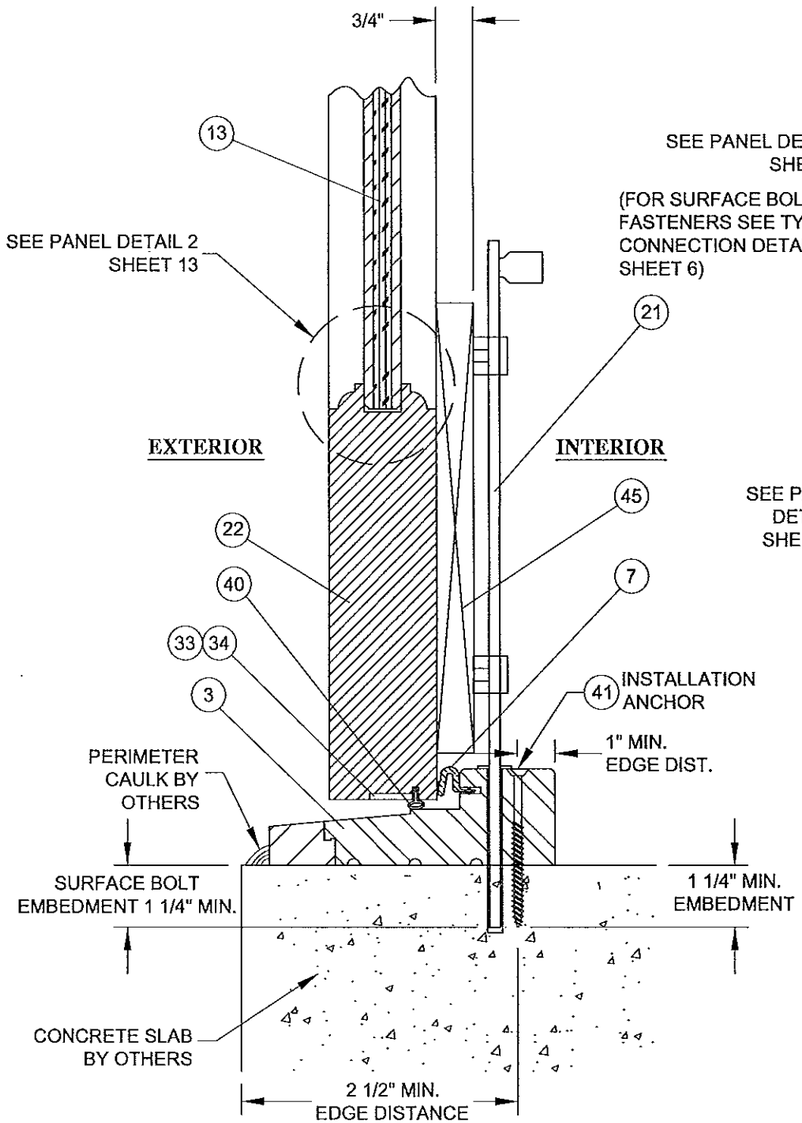

F/8 VERTICAL SECTION

CONCRETE SUBSTRATE
FLAT PANEL OR RAISED PANEL
EURO DESIGN

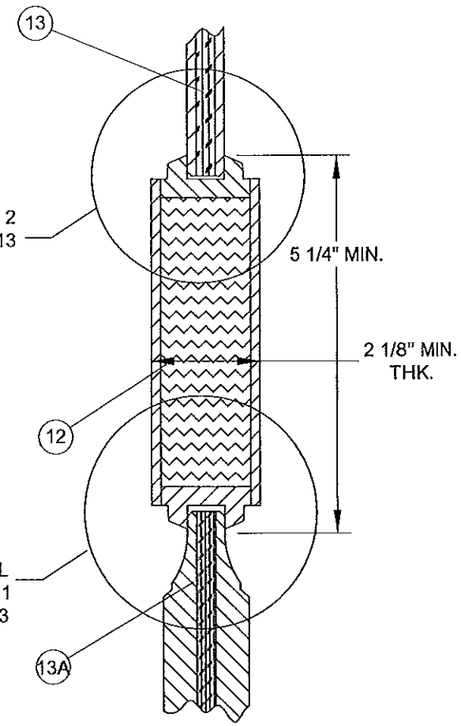

G/8 VERTICAL SECTION

INTERMEDIATE MEETING RAIL
AND PANEL INSERTS

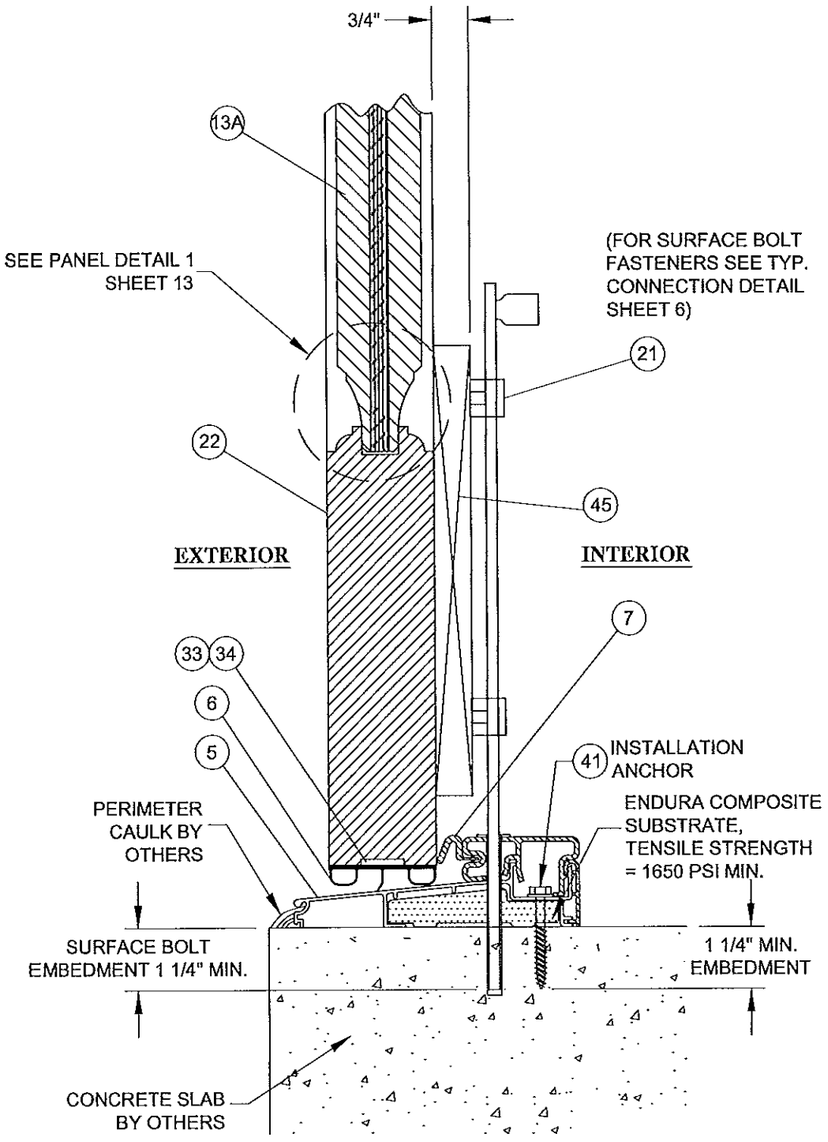

H/8 VERTICAL SECTION

CONCRETE SUBSTRATE
FLAT PANEL OR RAISED PANEL
STANDARD DESIGN

PROJECT #413-0105			
D	UPDATE TO 2010 FBC RENEW NOA	03/18/13	RJA
C	Per Miami Dade Comments	12/28/10	RJA
B	MANUF. NAME CHANGE	10/18/10	RJA
REV	DESCRIPTION	DATE	BY

BUFFLEN WOODWORKING CO., INC.
1901 TAYLOR WAY
TACOMA, WA 98421

10 FT. OPAQUE WOOD OUTSWING ENTRY DOOR
VERTICAL SECTIONS

TITLE:

PREPARED BY:

PTC PRODUCT DESIGN GROUP, LLC
Phone: 321.880.1788
Fax: 321.880.1788
Email: info@ptc-corp.com
Longwood, FL 32752-0775
FBPE Cert. of Auth. No. 29935

DRAWN BY:	DATE:
RJA	12/28/10
SCALE:	DRAWING NO:
N.T.S.	BUF0022
REV:	SHEET:
D	8 OF 16

Robert J. Amoruso, P.E.
Florida P.E. No. 49752

ROBERT JAMES AMORUSO
LICENSE
No 49752
5/18/13
STATE OF
FLORIDA
PROFESSIONAL ENGINEER

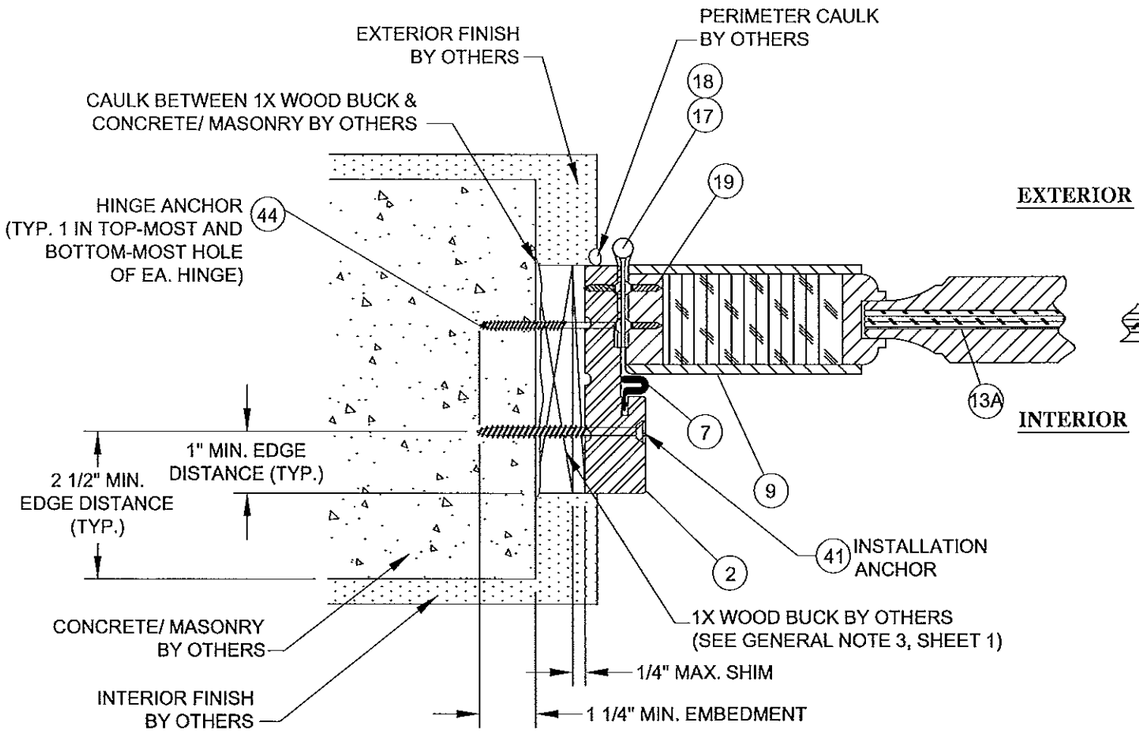

I/9 HORIZONTAL SECTION

CONCRETE / MASONRY SUBSTRATE
EURO DESIGN JAMB FRAME

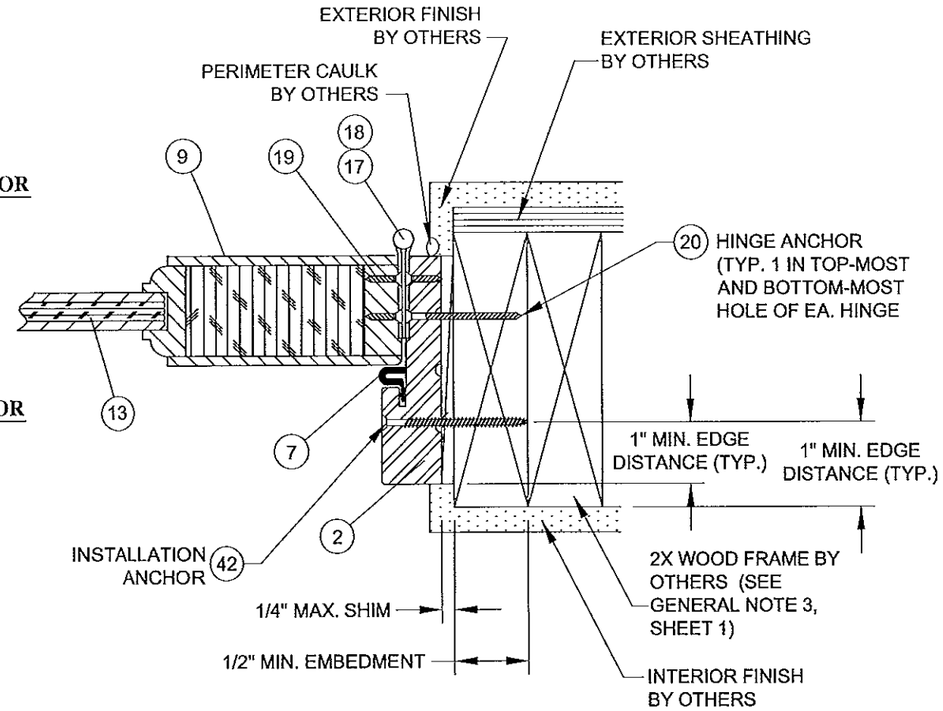

K/9 HORIZONTAL SECTION

WOOD FRAME SUBSTRATE
STANDARD DESIGN JAMB FRAME

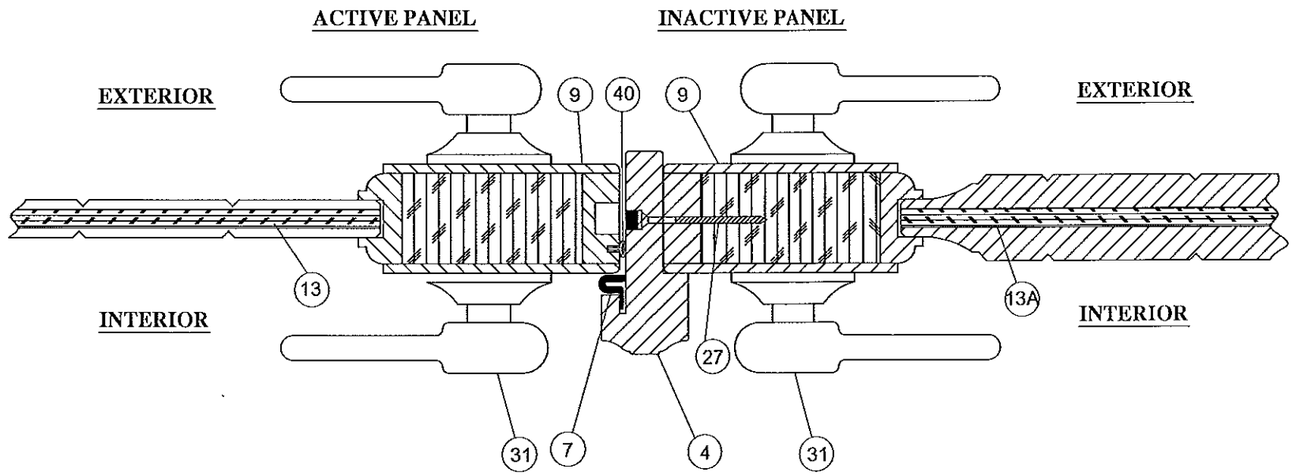

J/9 HORIZONTAL SECTION

ASTRAGAL

PROJECT #413-0105

REV	DESCRIPTION	DATE	BY
D	UPDATE TO 2010 FBC RENEW NOA	03/18/13	RJA
C	Per Miami Dade Comments	12/28/10	RJA
B	MANUF. NAME CHANGE	10/18/10	RJA

BUFFLEN WOODWORKING CO., INC.
1901 TAYLOR WAY
TACOMA, WA 98421

TITLE: 10 FT. OPAQUE WOOD OUTSWING ENTRY DOOR
HORIZONTAL SECTIONS

DRAWN BY: RJA
DATE: 12/28/10
SCALE: N.T.S.
DRAWING NO: BUF0022
REV: D
SHEET: 9 OF 16

PREPARED BY:
PTC PRODUCT DESIGN GROUP, LLC
P.O. Box 520775
Longwood, FL 37252-0775
FBPE Cert. of Auth. No. 25935
Phone: 321.890.1788
Fax: 321.890.1789
Email: info@ptc-corp.com

Robert J. Amoruso, P.E.
Florida P.E. No. 49752

ROBERT JAMES AMORUSO
LICENSE
No 49752
3/18/13
STATE OF FLORIDA
PROFESSIONAL ENGINEER

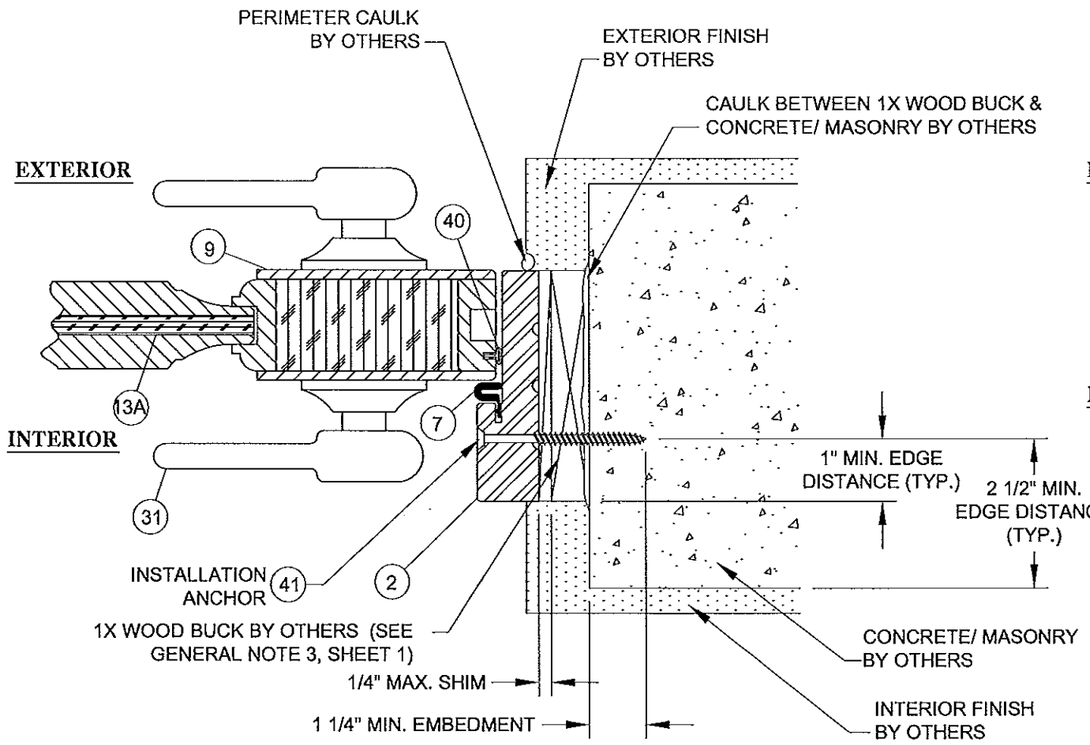

L/10 HORIZONTAL SECTION

CONCRETE/ MASONRY SUBSTRATE
STANDARD DESIGN JAMB FRAME

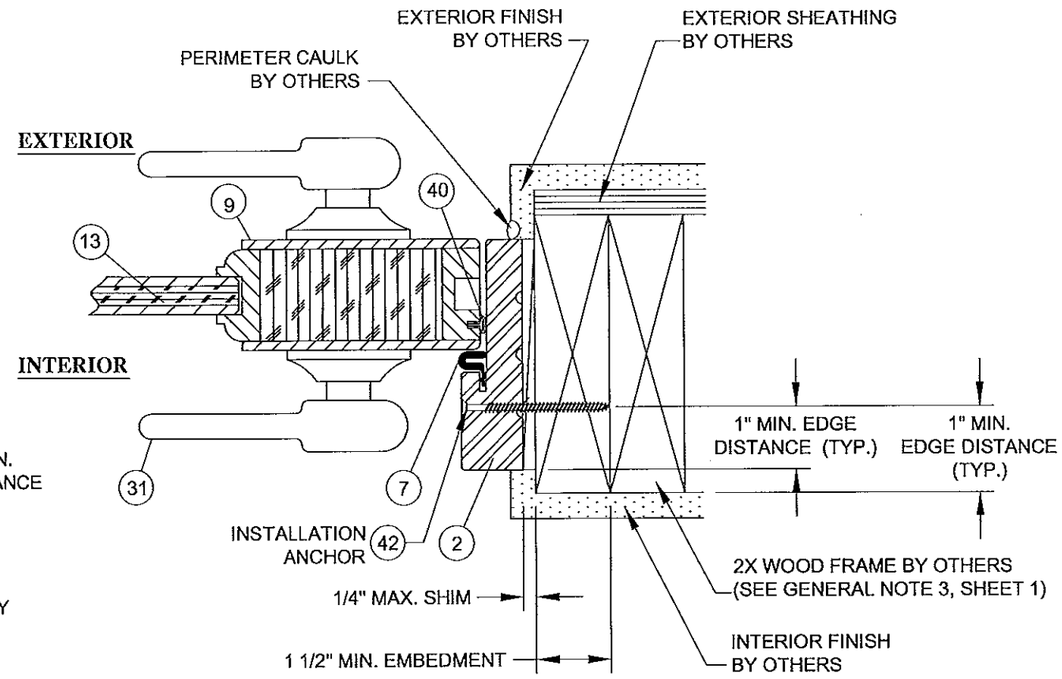

M/10 HORIZONTAL SECTION

WOOD FRAME SUBSTRATE
STANDARD DESIGN JAMB FRAME

REV	DESCRIPTION	DATE	BY
D	UPDATE TO 2010 FBC RENEW NOA	03/18/13	RJA
C	Per Miami Dade Comments	12/28/10	RJA
B	MANUF. NAME CHANGE	10/18/10	RJA

PROJECT #413-0105

BUFFLEN WOODWORKING CO., INC.
1901 TAYLOR WAY
TACOMA, WA 98421

TITLE: 10 FT. OPAQUE WOOD OUTSWING ENTRY DOOR
HORIZONTAL SECTIONS

DRAWN BY: RJA | DATE: 12/28/10
SCALE: N.T.S. | DRAWING NO: BUF0022
REV: D | SHEET: 10 OF 16

PREPARED BY:
PTC PRODUCT DESIGN GROUP, LLC
P.O. Box 523775
Longwood, FL 32752-0775
FBPE Cert. of Auth. No. 29935
Phone: 321.880.1788
Fax: 321.880.1789
Email: info@ptc-corp.com

Robert J. Amoruso, P.E.
Florida P.E. No. 49752

ROBERT JAMES AMORUSO
LICENSE
No 49752
STATE OF
FLORIDA
PROFESSIONAL ENGINEER
3/18/13

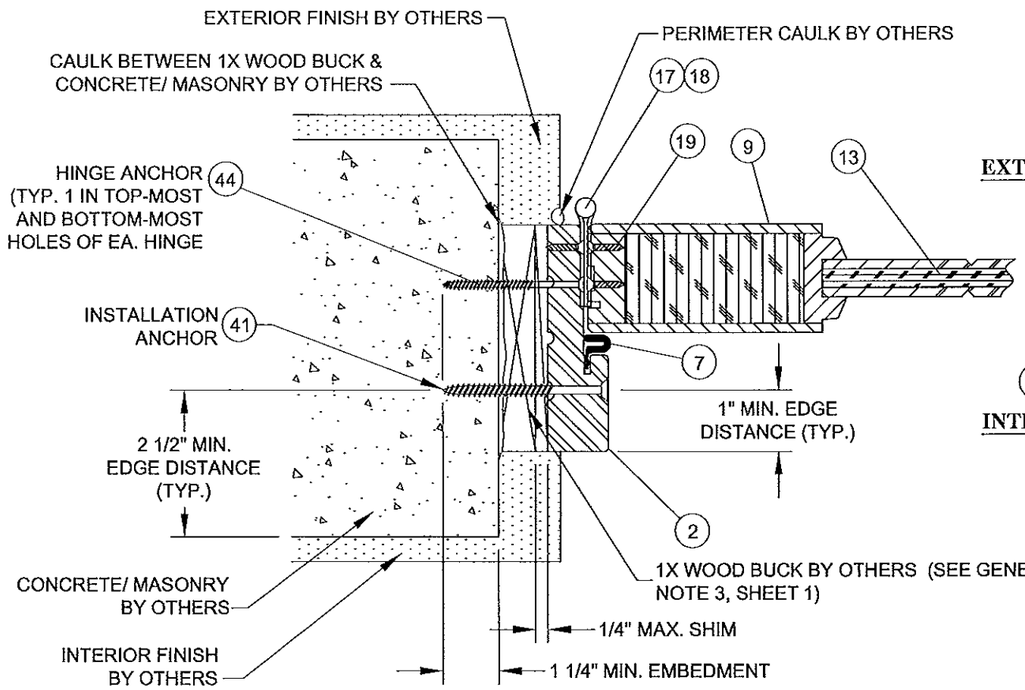

N/11 HORIZONTAL SECTION

CONCRETE/ MASONRY SUBSTRATE
STANDARD DESIGN JAMB FRAME

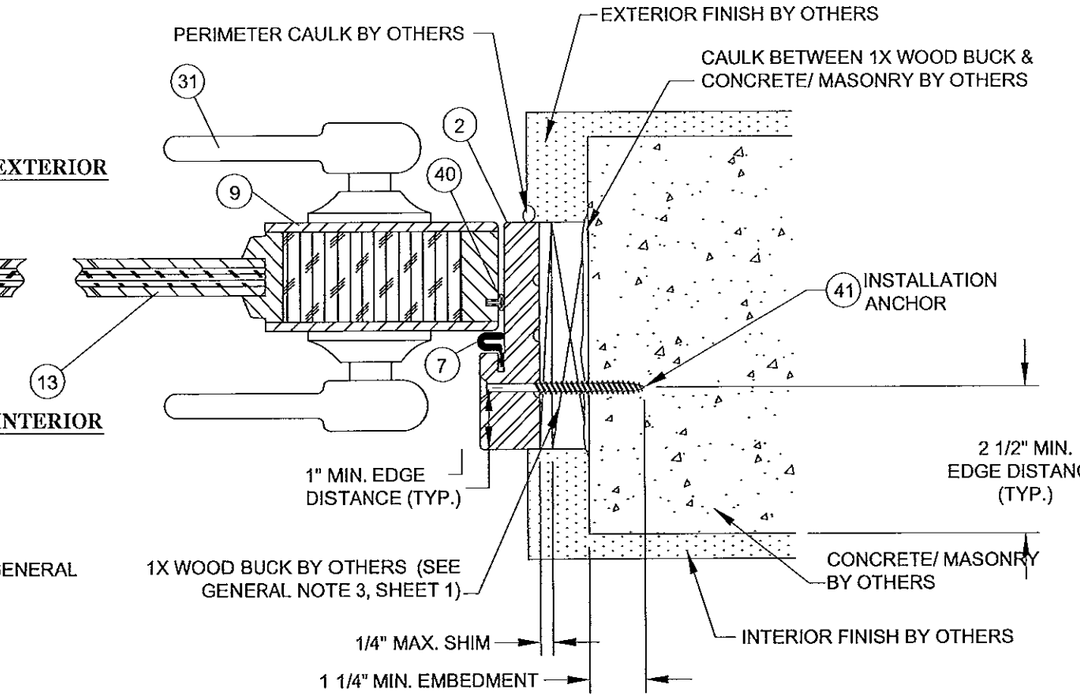

O/11 HORIZONTAL SECTION

CONCRETE/ MASONRY SUBSTRATE
STANDARD DESIGN JAMB FRAME

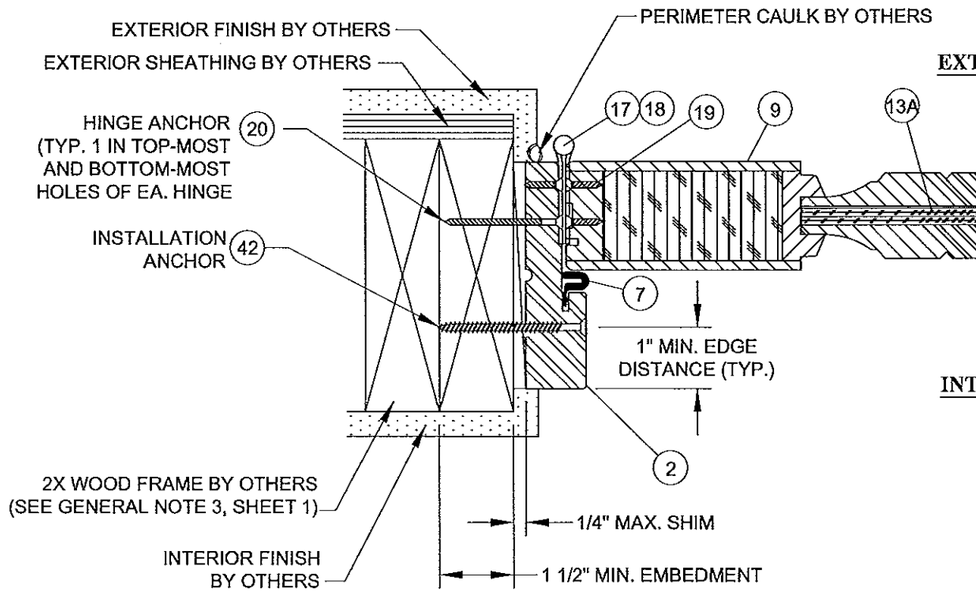

P/11 HORIZONTAL SECTION

WOOD FRAME SUBSTRATE
STANDARD DESIGN JAMB FRAME

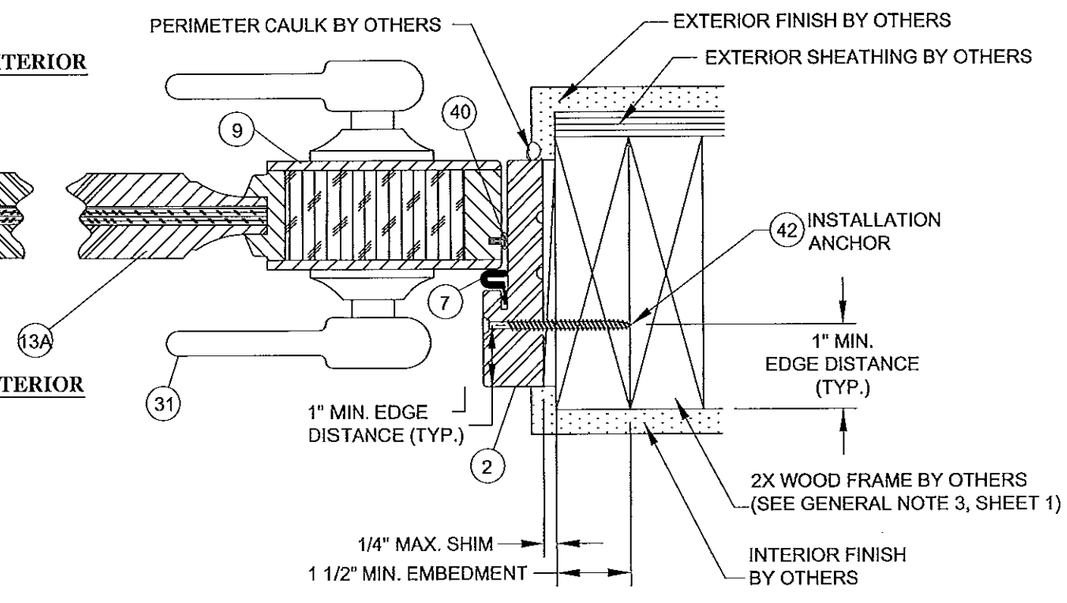

Q/11 HORIZONTAL SECTION

WOOD FRAME SUBSTRATE
STANDARD DESIGN JAMB FRAME

PROJECT #413-0105

REV	DESCRIPTION	DATE	BY
D	UPDATE TO 2010 FBC RENEW NOA	03/18/13	RJA
C	Per Miami Dade Comments	12/28/10	RJA
B	MANUF. NAME CHANGE	10/18/10	RJA

BUFFLEN WOODWORKING CO., INC.
1901 TAYLOR WAY
TACOMA, WA 98421

TITLE: 10 FT. OPAQUE WOOD OUTSWING ENTRY DOOR HORIZONTAL SECTIONS

DRAWN BY: RJA
DATE: 12/28/10
SCALE: N.T.S.
DRAWING NO: BUF0022
REV: D
SHEET: 11 OF 16

PREPARED BY:
PTC PRODUCT DESIGN GROUP, LLC
P.O. Box 520775
Longwood, FL 37252-0775
FBPE Cert. of Auth. No. 25935
Phone: 321.690.1788
Fax: 321.690.1789
Email: info@ptc-corp.com

Robert J. Amoruso, P.E.
Florida P.E. No. 49752

ROBERT JAMES AMORUSO
LICENSE
No 49752
3/18/13
STATE OF FLORIDA
PROFESSIONAL ENGINEER

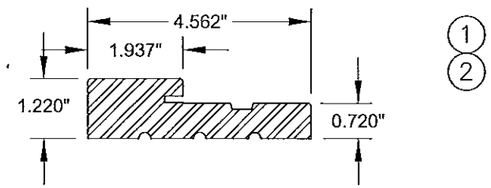

1 2

KERFED EURO HEAD & SIDE JAMB DETAIL

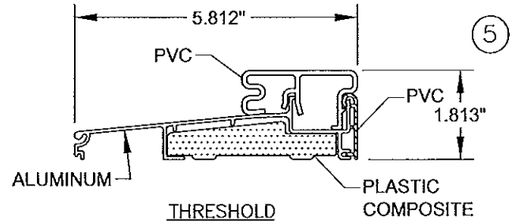

5

THRESHOLD
TYP. WALL THICKNESS 0.062"

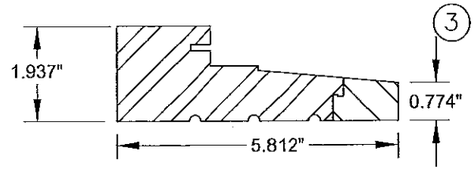

3

MAHOGANY EURO SILL W/EXTENDER

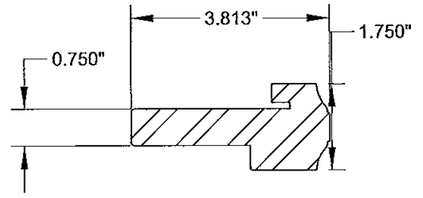

4

10/4 ONE (1) PIECE SLD T-ASTRAGAL

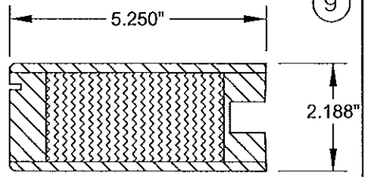

9

OPAQUE DOOR STILE DETAIL
WOOD OR LVL CORE

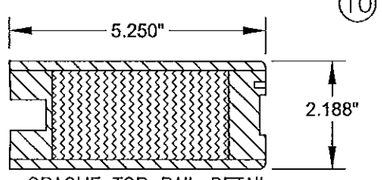

10

OPAQUE TOP RAIL DETAIL
WOOD OR LVL CORE

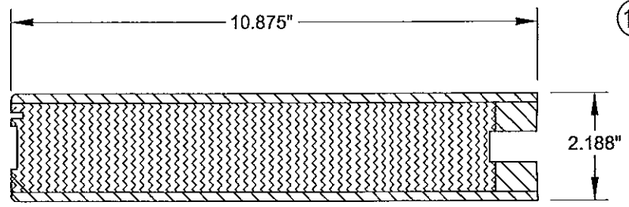

11

OPAQUE BOTTOM RAIL

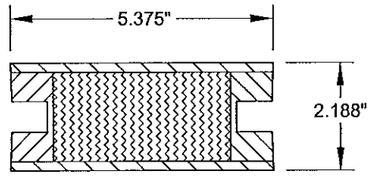

23

OPAQUE DOOR MULL DETAIL
WOOD OR LVL CORE

APPROVED PROFILES
FOR ALL DOOR RAILS
AND STILES

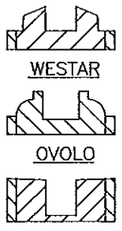

WESTAR

OVOLO

SHAKER

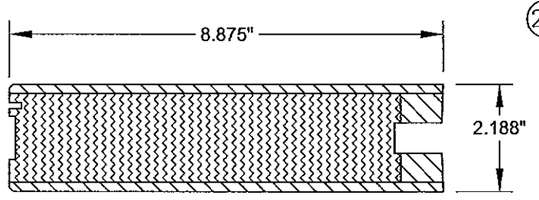

22

OPAQUE BOTTOM RAIL DETAIL
WOOD OR LVL CORE

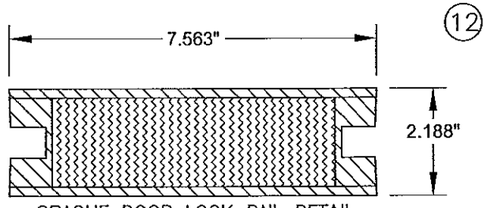

12

OPAQUE DOOR LOCK RAIL DETAIL
WOOD OR LVL CORE

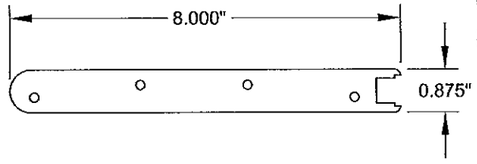

33
34

ACTIVE/INACTIVE REINFORCEMENT PLATE
THICKNESS = 1/8"

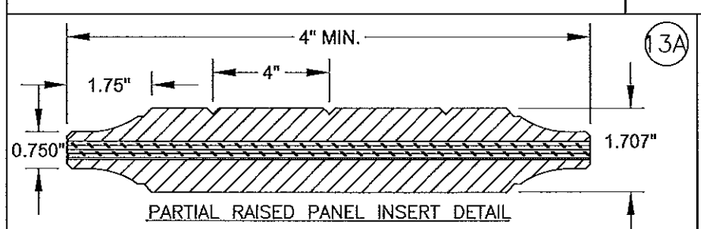

13A

PARTIAL RAISED PANEL INSERT DETAIL

NOTE: STANDARD OR CUSTOM PATTERNED V-GROOVES OPTIONAL

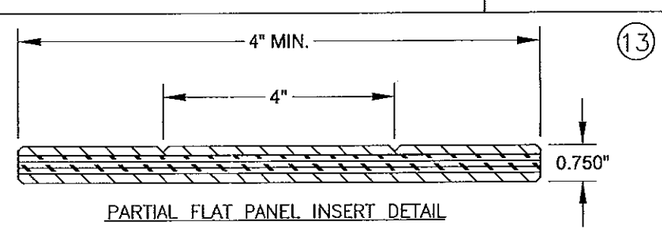

13

PARTIAL FLAT PANEL INSERT DETAIL

NOTE: STANDARD OR CUSTOM PATTERNED V-GROOVES OPTIONAL

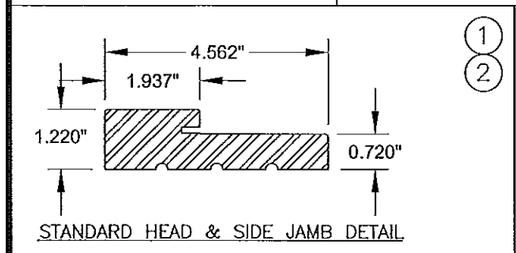

1 2

STANDARD HEAD & SIDE JAMB DETAIL

PROJECT #413-0105			
D	UPDATE TO 2010 FBC RENEW NOA	03/18/13	RJA
C	Per Miami Dade Comments	12/28/10	RJA
B	MANUF. NAME CHANGE	10/18/10	RJA
REV.	DESCRIPTION	DATE	BY

BUFFLEN WOODWORKING CO., INC.
1901 TAYLOR WAY
TACOMA, WA 98421

TITLE: 10 FT. OPAQUE WOOD OUTSWING ENTRY DOOR COMPONENTS

DRAWN BY: RJA | DATE: 12/28/10
SCALE: N.T.S. | DRAWING NO: BUF0022
REV: D | SHEET: 12 OF 16

PREPARED BY:
PTC PRODUCT DESIGN GROUP, LLC
P.O. Box 520775
Longwood, FL 32752-0775
FBPE Cert. of Auth. No. 23935
Phone: 321.690.1788
Fax: 321.690.1789
Email: info@ptc-corp.com

Robert J. Amoruso, P.E.
Florida P.E. No. 49752

ROBERT JAMES AMORUSO
LICENSE
No 49752
3/18/13
STATE OF
FLORIDA
PROFESSIONAL ENGINEER

BILL OF MATERIALS

ITEM #	PART #	DESCRIPTION	MATERIAL	VENDOR
1	HEAD FRAME (KERFED)	1-7/32" X 4-9/16"	SP CEDAR (SEE NOTE)	BUFFELEN WOODWORKING
2	JAMB FRAME (KERFED)	1-7/32" X 4-9/16"	SP CEDAR (SEE NOTE)	BUFFELEN WOODWORKING
3	EURO SILL	1-15/16" X 5-13/16" OUTSWING THRESHOLD	MAHOGANY	MCPHILLIPS MFG.
4	ONE PIECE T-ASTRAGAL	1-3/4" X 3-13/16"	SP CEDAR (SEE NOTE)	BUFFELEN WOODWORKING
5	ZOBLHP5815F	1-15/16" X 5-13/16" OUTSWING THRESHOLD	ALUMINUM WITH COMPOSITE SUBSTRATE	ENDURA
6	DBS214BR30	1/2" BOTTOM SWEEP		ENDURA
7	Q-LON QEBD 825	STANDARD WEATHERSTRIP	FOAM	SCHLEGEL
9	DOOR STILE	2-3/16" X 5-1/4"	SP CEDAR (SEE NOTE)	BUFFELEN WOODWORKING
10	DOOR TOP RAIL	2-3/16" X 5-1/4"	SP CEDAR (SEE NOTE)	BUFFELEN WOODWORKING
11	DOOR BOTTOM RAIL	2-3/16" X 10-7/8"	SP CEDAR (SEE NOTE)	BUFFELEN WOODWORKING
12	DOOR LOCK RAIL	2-3/16" X 7-9/16"	SP CEDAR (SEE NOTE)	BUFFELEN WOODWORKING
13	DOOR FLAT IMPACT PANEL	FACE GLUED W/ MARINE PLYWOOD	SP CEDAR (SEE NOTE)	BUFFELEN WOODWORKING
13A	DOOR RAISED IMPACT PANEL	FACE GLUED W/ MARINE PLYWOOD	SP CEDAR (SEE NOTE)	BUFFELEN WOODWORKING
17	S44R5HDB-10B	4" X 4" BALL BEARING HINGE	STEEL	DELTANA
18	S44R5HDB-10B	4" X 4" BALL BEARING HINGE (NRP)	STEEL	
19		#9 X 3/4" FHWS	STEEL	
20		#9 X 2-1/4" FHWS	STEEL	
21	580-12	12" SURFACE BOLT	STEEL	ROCKWOOD
22	DOOR BOTTOM RAIL	2-3/16" X 8-3/8"	SP CEDAR (SEE NOTE)	BUFFELEN WOODWORKING
23	DOOR MULL	2-3/16" X 5-3/8"	SP CEDAR (SEE NOTE)	BUFFELEN WOODWORKING
25		#7 X 2-1/4" FHWS	STEEL	
26		#9 X 2-1/2" FHWS	STEEL	
27		#10 X 2-1/4" FHWS	STEEL	
28	HLS9000	5 PT LOCKSET - ACTIVE/ INACTIVE PANEL		HOPPE
29	3500 SERIES	5 PT LOCKSET - ACTIVE/ INACTIVE PANEL		W&F MANUFACTURING
30	3000 SERIES	3 PT LOCKSET - ACTIVE PANEL		W&F MANUFACTURING
31	F51 & B360 N	PASS THRU DOOR LOCK AND DEAD BOLT		SCHLAGE
32	0600-030	FLUSH BOLT INCL 18" EXTENSION ROD		BALDWIN
33		ACTIVE REINFORCEMENT PLATE		BUFFELEN WOODWORKING
34		INACTIVE REINFORCEMENT PLATE		BUFFELEN WOODWORKING
35	1294A	1-1/4" ANCHOR PLATE		BUFFELEN WOODWORKING
36		#7 X 1/2" FHWS	STEEL	
37		#10 WOOD BISCUIT		
40	AP-415	APTUS BULB WEATHERSTRIP		SCHLEGEL
41		1/4" FH TAPCON (INSTALLATION ANCHOR)	STEEL	ITW
42		#12 FH WOOD SCREW (INSTALLATION ANCHOR)	STEEL	
44		3/16" FH TAPCON	STEEL	ITW
45		3/4" THICK WOOD SPACER FOR SURFACE BOLT	SP CEDAR (SEE NOTE)	BUFFELEN WOODWORKING

NOTE:

SPANISH CEDAR (SP CEDAR) USED IN TESTING. EQUIVALENT WOOD MEETING THE FOLLOWING ACCEPTABLE.
MIN S.G. = 0.40
E = 1,430,000 PSI

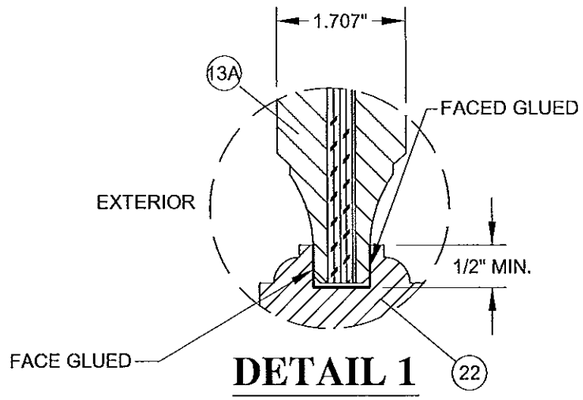

DETAIL 1
PARTIAL RAISED WOOD PANEL

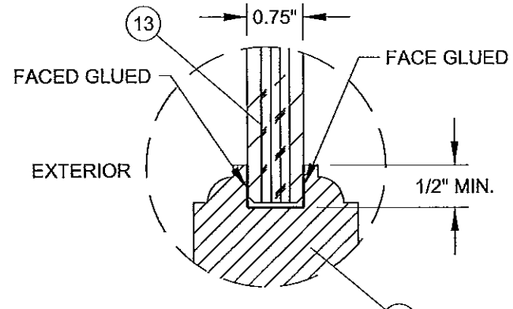

DETAIL 2
PARTIAL FLAT WOOD PANEL

D	UPDATE TO 2010 FBC RENEW NOA	03/18/13	RJA
C	Per Miami Dade Comments	12/28/10	RJA
B	MANUF. NAME CHANGE	10/18/10	RJA
REV.	DESCRIPTION	DATE	BY

PROJECT #413-0105

BUFFLEN WOODWORKING CO., INC.
1901 TAYLOR WAY
TACOMA, WA 98421

10 FT. OPAQUE WOOD OUTSWING ENTRY DOOR
BILL OR MATERIALS # GLAZING DETAILS

TITLE:

PREPARED BY:
PTC PRODUCT DESIGN GROUP, LLC
P.O. Box 522075
Longwood, FL 32752-0775
FBPE Cert. of Auth. No. 25935
Phone: 321.690.1788
Fax: 321.690.1789
Email: info@ptc-corp.com

DRAWN BY: RJA
DATE: 12/28/10
SCALE: N.T.S.
DRAWING NO: BUF0022
REV: D
SHEET: 13 OF 16

Robert J. Amoruso, P.E.
Florida P.E. No. 49752

ROBERT JAMES AMORUSO
LICENSE
No 49752
3/18/13
STATE OF
FLORIDA
PROFESSIONAL ENGINEER

* ALL ELEVATIONS SHOWN ALSO QUALIFY 96", 84", AND 80" HEIGHTS AND ANY OTHER CUSTOM SIZES SMALLER THAN TESTED.

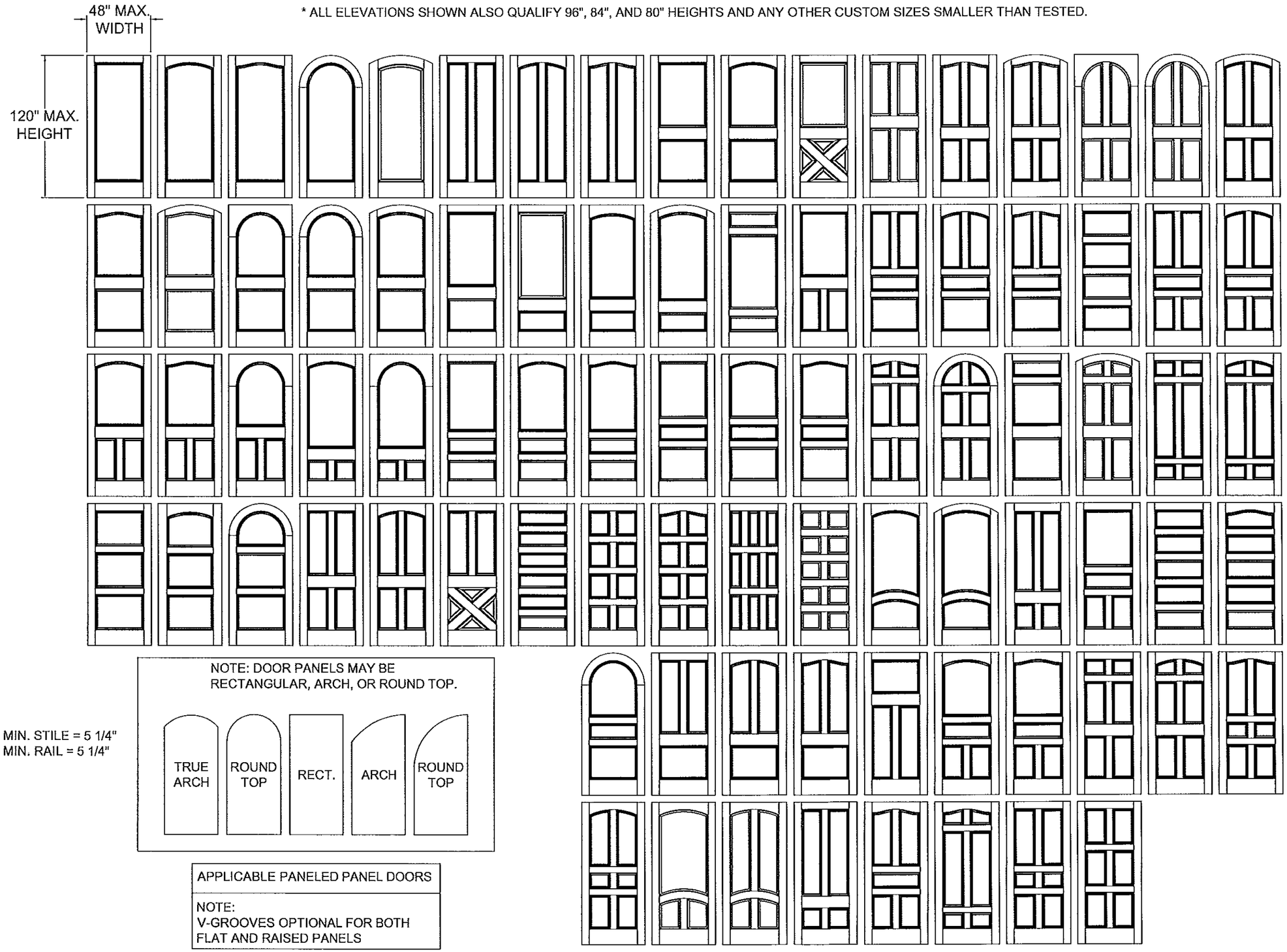

NOTE: DOOR PANELS MAY BE RECTANGULAR, ARCH, OR ROUND TOP.

MIN. STILE = 5 1/4"
MIN. RAIL = 5 1/4"

APPLICABLE PANELED PANEL DOORS
NOTE: V-GROOVES OPTIONAL FOR BOTH FLAT AND RAISED PANELS

PROJECT #413-0105

REV	DESCRIPTION	DATE	BY
D	UPDATE TO 2010 FBC RENEW NOA	03/18/13	RJA
C	Per Miami Dade Comments	12/28/10	RJA
B	MANUF. NAME CHANGE	10/18/10	RJA

BUFFLEN WOODWORKING CO., INC.
1901 TAYLOR WAY
TACOMA, WA 98421

TITLE: 10 FT. OPAQUE WOOD OUTSWING ENTRY DOOR DOOR PANEL CONFIGURATIONS

PREPARED BY:

PTC PRODUCT DESIGN GROUP, LLC
P.O. Box 520775
Longwood, FL 37252-0775
FBPE Cert. of Auth. No. 25935
Phone: 321.690.1788
Fax: 321.690.1789
Email: info@ptc-corp.com

DRAWN BY: RJA
DATE: 12/28/10
SCALE: N.T.S.
DRAWING NO: BUF0022
REV: D
SHEET: 14 OF 16

Robert J. Amoruso, P.E.
Florida P.E. No. 49752

ROBERT JAMES AMORUSO
LICENSE
No 49752
3/18/13
STATE OF FLORIDA
PROFESSIONAL ENGINEER

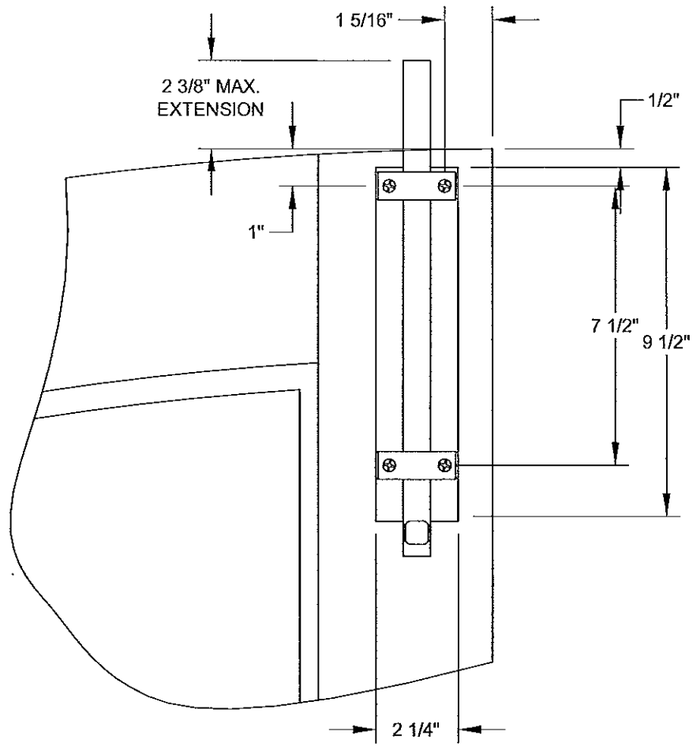

DETAIL 7
SURFACE BOLT

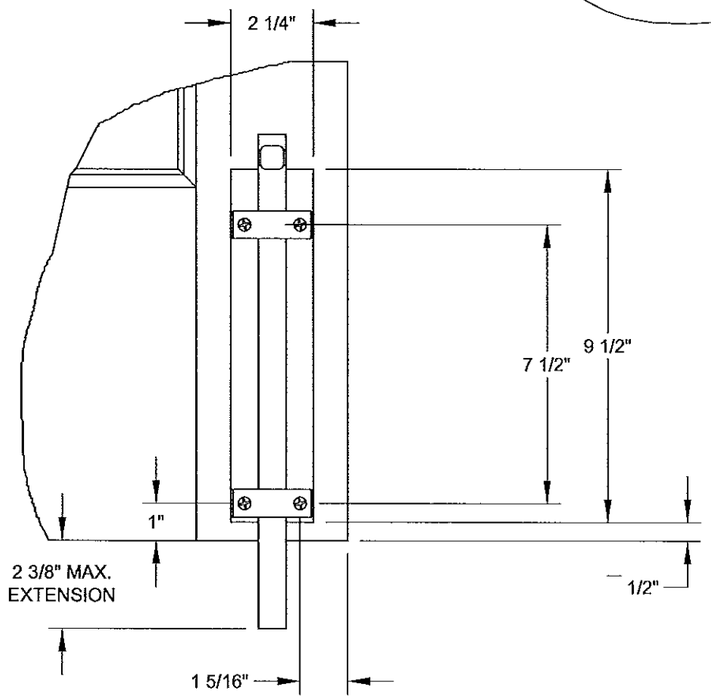

DETAIL 6
SURFACE BOLT

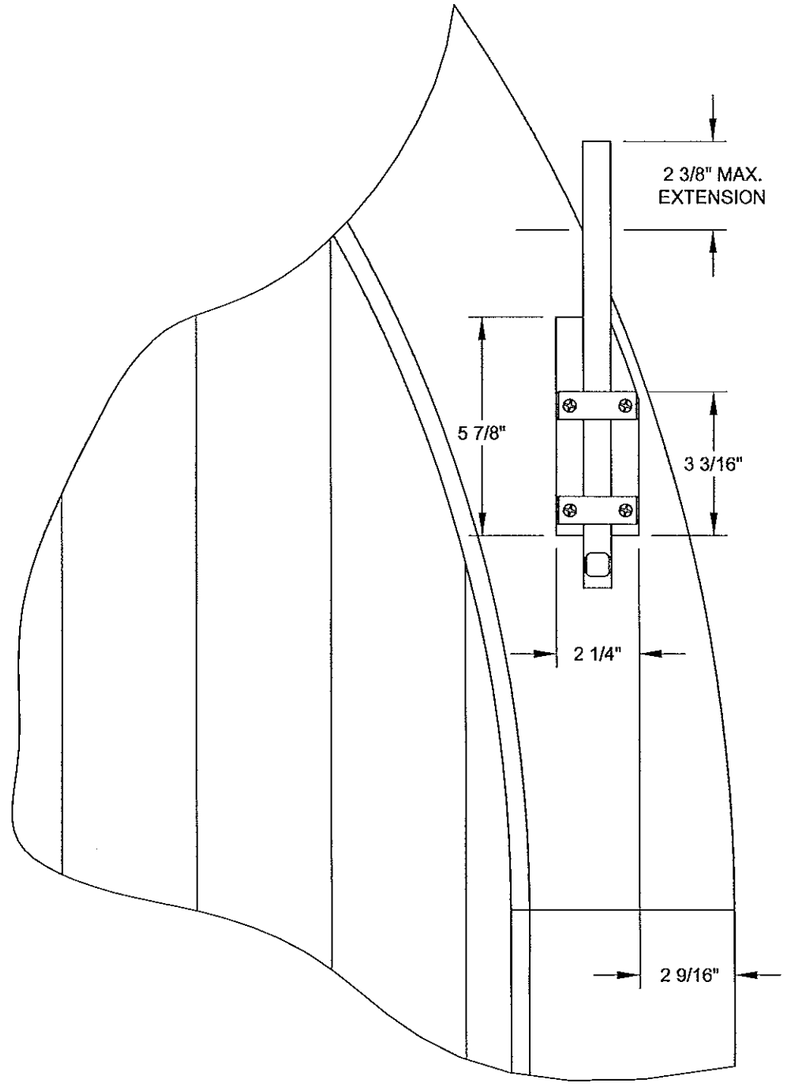

DETAIL 5
SURFACE BOLT

PROJECT #413-0105			
D	UPDATE TO 2010 FBC RENEW NOA	03/18/13	RJA
C	Per Miami Dade Comments	12/28/10	RJA
B	MANUF. NAME CHANGE	10/18/10	RJA
REV	DESCRIPTION	DATE	BY

BUFFLEN WOODWORKING CO., INC.
1901 TAYLOR WAY
TACOMA, WA 98421

TITLE: 10 FT. OPAQUE WOOD OUTSWING ENTRY DOOR
SURFACE BOLT DETAILS

DRAWN BY: RJA | DATE: 12/28/10
SCALE: N.T.S. | DRAWING NO: BUF0022
REV: D | SHEET: 15 OF 16

PREPARED BY:
PTC PRODUCT DESIGN GROUP, LLC
P.O. Box 520775
Longwood, FL 32750-0775
FBPE Cert. of Auth. No. 25935
Phone: 321.890.1788
Fax: 321.890.1789
Email: info@ptc-corp.com

Robert J. Amoruso, P.E.
Florida P.E. No. 49752

ROBERT JAMES AMORUSO
LICENSE
No 49752
3/18/13
STATE OF
FLORIDA
PROFESSIONAL ENGINEER

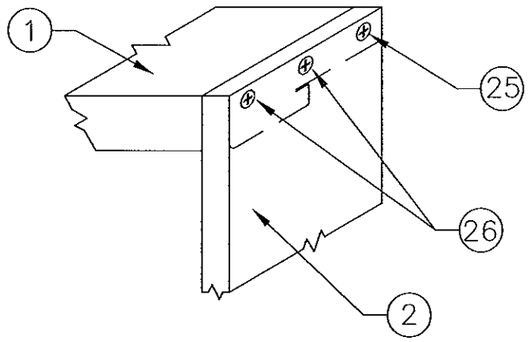

DETAIL "9"

SIDE JAMB ATTACHMENT

TO HEAD JAMB

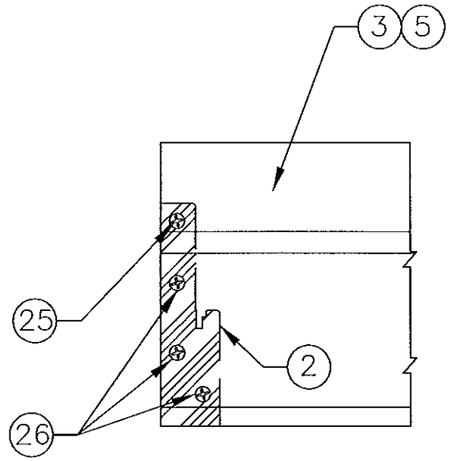

DETAIL "8"

SIDE JAMB ATTACHMENT

TO THRESHOLD

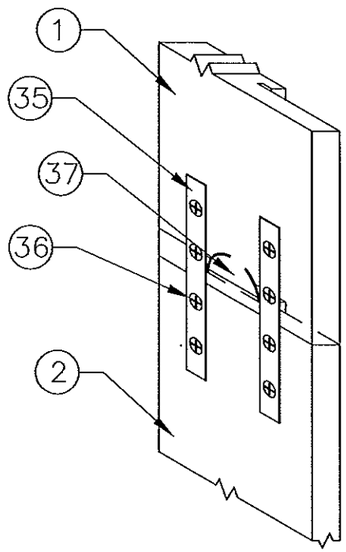

DETAIL "10"

SIDE JAMB ATTACHMENT

TO HEAD JAMB

REV	DESCRIPTION	DATE	BY
D	UPDATE TO 2010 FBC RENEW NOA	03/18/13	RJA
C	Per Miami Dade Comments	12/28/10	RJA
B	MANUF. NAME CHANGE	10/18/10	RJA

PROJECT #413-0105

BUFFLEN WOODWORKING CO., INC.
1901 TAYLOR WAY
TACOMA, WA 98421

TITLE: 10 FT. OPAQUE WOOD OUTSWING ENTRY DOOR FRAME CORNER DETAILS

PREPARED BY: PTC PRODUCT DESIGN GROUP, LLC
P.O. Box 520775
Longwood, FL. 32752-0775
FBPE Cert. of Auth. No. 25935
Phone: 321.880.1788
Fax: 321.880.1789
Email: info@ptc-corp.com

DRAWN BY: RJA
DATE: 12/28/10
SCALE: N.T.S.
DRAWING NO: BUF0022
REV: D
SHEET: 16 OF 16

Robert J. Amoruso, P.E.
Florida P.E. No. 49752

ROBERT JAMES AMORUSO
LICENSE
No 49752
3/18/13
STATE OF
FLORIDA
PROFESSIONAL ENGINEER