MIAMI-DADE COUNTY
DEPARTMENT OF REGULATORY AND ECONOMIC RESOURCES (RER)
BOARD AND CODE ADMINISTRATION DIVISION

MIAMI-DADE COUNTY
PRODUCT CONTROL SECTION
11805 SW 26 Street, Room 208
Miami, Florida 33175-2474
T (786) 315-2590 F (786) 315-2599
www.miamidade.gov/economy

NOTICE OF ACCEPTANCE (NOA)

Aluminum Technologies Corp.
2205 W. 80th Street, Bay #3
Hialeah, Florida 33016

SCOPE:

This NOA is being issued under the applicable rules and regulations governing the use of construction materials. The documentation submitted has been reviewed and accepted by Miami-Dade County RER- Product Control Section to be used in Miami Dade County and other areas where allowed by the Authority Having Jurisdiction (AHJ).

This NOA shall not be valid after the expiration date stated below. The Miami-Dade County Product Control Section (In Miami Dade County) and/or the AHJ (in areas other than Miami Dade County) reserve the right to have this product or material tested for quality assurance purposes. If this product or material fails to perform in the accepted manner, the manufacturer will incur the expense of such testing and the AHJ may immediately revoke, modify, or suspend the use of such product or material within their jurisdiction. RER reserves the right to revoke this acceptance, if it is determined by Miami-Dade County Product Control Section that this product or material fails to meet the requirements of the applicable building code.

This product is approved as described herein, and has been designed to comply with the High Velocity Hurricane Zone of the Florida Building Code.

DESCRIPTION: " HPMA / Performance System 2 " Aluminum Accordion Shutter

APPROVAL DOCUMENT: Drawing No. AD10-12, titled " System 2 Aluminum Accordion Shutter ", sheets 1 through 10 of 10, prepared by MCY Engineering, Inc., dated May 13, 2013, last revision #2 dated March 25, 2012, signed and sealed by Yiping Wang, P.E., bearing the Miami-Dade County Product Control Revision stamp with the Notice of Acceptance number and the expiration date by the Miami-Dade County Product Control Section.

MISSILE IMPACT RATING: Large and Small Missile Impact Resistant

LABELING: Each unit shall bear a permanent label with the manufacturer's name or logo, city, state, the following statement: "Miami-Dade County Product Control Approved", and NOA number, per TAS-201, TAS-202, and TAS-203, unless otherwise noted herein.

RENEWAL of this NOA shall be considered after a renewal application has been filed and there has been no change in the applicable building code negatively affecting the performance of this product.

TERMINATION of this NOA will occur after the expiration date or if there has been a revision or change in the materials, use, and/or manufacture of the product or process. Misuse of this NOA as an endorsement of any product, for sales, advertising or any other purposes shall automatically terminate this NOA. Failure to comply with any section of this NOA shall be cause for termination and removal of NOA.

ADVERTISEMENT: The NOA number preceded by the words Miami-Dade County, Florida, and followed by the expiration date may be displayed in advertising literature. If any portion of the NOA is displayed, then it shall be done in its entirety.

INSPECTION: A copy of this entire NOA shall be provided to the user by the manufacturer or its distributors and shall be available for inspection at the job site at the request of the Building Official.

This NOA **revises NOA # 10-0105.01** and consists of this page 1, evidence submitted pages E-1 & E-2 as well as approval document mentioned above.
The submitted documentation was reviewed by **Helmy A. Makar, P.E., M.S.**

MIAMI-DADE COUNTY APPROVED

06/20/2013

NOA No. 13-0326.15
Expiration Date: 02/17/2015
Approval Date: 06/20/2013

Aluminum Technologies Corp.

NOTICE OF ACCEPTANCE: EVIDENCE SUBMITTED

1. EVIDENCE SUBMITTED UNDER PREVIOUS APPROVAL # 10-0105.01

A. DRAWINGS

1. *Drawing No. 09-200, titled " Performance System 2 Accordion Shutter ", sheets 1 through 10 of 10, prepared by Tilteco, Inc., dated October 22, 2009, signed and sealed by Walter A. Tillit Jr., P.E., on October 23, 2009*

B. TESTS

1. *See Association's generic approval under 09-0645.*

C. CALCULATIONS

1. *See Association's generic approval under 09-0645.*

D. QUALITY ASSURANCE

1. *By Miami-Dade County Building Code Compliance Office.*

E. MATERIAL CERTIFICATIONS

1. *See Association's generic approval under 09-0645.*

F. STATEMENTS

1. *Release letter issued by the Hurricane Protection Manufacturers Association, dated October 20, 2009, certifying this product to meet the criteria of product tested and approved, and allowing Aluminum Technologies Corp. to use the test results approved under Miami Dade County Approval No. 09-0645, signed by Mr. Henry Revilla.*
2. *Acknowledgment letter by Aluminum Technologies Corp., dated October 20, 2009, signed by Nilvaldo Fiallo.*
3. *Letter by Tilteco Inc., dated October 23, 2009, signed and sealed by Mr. Walter A. Tillit, Jr., P.E., certifying that the drawing (No. 09-200) prepared for Aluminum Technologies Corp., is engineering wise identical to HPMA's generic drawing (No. 09-035).*

2. NEW EVIDENCE SUBMITTED

A. DRAWINGS

1. *Drawing No. AD10-12, titled " System 2 Aluminum Accordion Shutter ", sheets 1 through 10 of 10, prepared by MCY Engineering, Inc., dated May 13, 2013, last revision #2 dated March 25, 2012, signed and sealed by Yiping Wang, P.E.*

B. TESTS

1. *See Association's generic approval under 12-0736.*

Helmy A. Makar, P.E., M.S.
Product Control Unit Supervisor
NOA No. 13-0326.15
Expiration Date: 02/17/2015
Approval Date: 06/20/2013

C. CALCULATIONS

1. *See Association's generic approval under 12-0736.*

D. QUALITY ASSURANCE

1. *By Miami-Dade County Department of Regulatory and Economic Resources.*

E. MATERIAL CERTIFICATIONS

1. *See Association's generic approval under 12-0736.*

F. STATEMENTS

1. *Release letter issued by the Hurricane Protection Manufacturers Association, dated March 26, 2013, certifying this product to meet the criteria of product tested and approved, and allowing Aluminum Technologies Corp. to use the test results approved under Miami Dade County Approval No. 12-0736, signed by Mr. Henry Revilla.*
2. *Acknowledgment letter by Aluminum Technologies Corp., dated March 26, 2013, signed by Nilvaldo Fiallo.*

Helmy A. Makar, P.E., M.S.
Product Control Unit Supervisor
NOA No. 13-0326.15
Expiration Date: 02/17/2015
Approval Date: 06/20/2013

GENERAL NOTES:

1. THIS PRODUCT HAS BEEN DESIGNED AND TESTED TO COMPLY WITH THE REQUIREMENTS OF THE FLORIDA BUILDING CODE INCLUDING HIGH VELOCITY HURRICANE ZONE (HVHZ).

2. STAINLESS STEEL SHEET METAL SCREWS USED AT LOUVER PIN SHALL BE # 14 x 3", 410-HT MINIMUM SERIES W/ 135.0 ksi YIELD STRENGTH & 180 ksi TENSILE STRENGTH. SCREWS SHALL BE COATED WITH XYLAN 5000 SERIES FLUOROPOLYMER COATINGS AS MANUFACTURED BY WHITFORD Co, BOX 507. WEST CHESTER PA. 19381.

3. ALL ALUMINUM EXTRUSIONS SHALL BE 6063-T6 ALLOY WITH MINIMUM YIELD STRENGTH OF Fy=31.0 ksi.

4. ANCHORS SHALL BE AS LISTED, SPACED AS SHOWN ON DETAILS. ANCHORS EMBEDMENT TO BASE MATERIAL SHALL BE BEYOND WALL DRESSING OR STUCCO.

5. ANCHORING OR LOADING CONDITIONS NOT SHOWN IN THESE DETAILS ARE NOT PART OF THIS APPROVAL.

6. WOOD BUCKS BY OTHERS MUST BE SOUTHERN PINE, G = 0.55 AND MUST BE ANCHORED PROPERLY TO TRANSFER LOADS TO THE STRUCTURE.

7. ALL ALUMINUM POP RIVETS TO BE 5052 ALUMINUM ALLOY WITH ALUMINUM MANDREL.

8. BOLTS TO BE GALVANIZED OR STAINLESS STEEL WITH 36 ksi MINIMUM MINIMUM YIELD STRENGTH.

9. SHUTTER'S COMPONENTS ARE PATENT PENDING.

9. IT SHALL BE THE RESPONSIBILITY OF THE CONTRACTOR TO VERIFY THE SOUNDNESS OF THE STRUCTURE WHERE SHUTTER IS TO BE ATTACHED TO INSURE PROPER ANCHORAGE. THIS SHUTTER SHALL ONLY BE ATTACHED TO CONCRETE, BLOCK OR WOOD FRAME BUILDINGS.

11. A PERMANENT SHUTTER MANUFACTURER'S LABEL SHALL BE PLACED ON THE EXPOSED SURFACE OF THE FEMALE CENTER MATE BLADE (COMPONENT H). ONE LABEL SHALL BE PLACED FOR EVERY OPENING. LABEL SHALL READ AS FOLLOWS:
   "PERFORMANCE SYSTEM 2 ACCORDION SHUTTER"
   HURRICANE PROTECTION MANUFACTURERS ASSOCIATION
   HIALEAH, FLORIDA
   MIAMI-DADE COUNTY PRODUCT CONTROL APPROVED.

12. (a) THIS PRODUCT APPROVAL DOCUMENT (P.A.D.) PREPARED BY THIS ENGINEER IS GENERIC.

(b) CONTRACTOR TO BE RESPONSIBLE FOR THE SELECTION, PURCHASE AND INSTALLATION INCLUDING LIFE SAFETY OF THIS PRODUCT BASED ON THIS PRODUCT APPROVAL PROVIDED HE/SHE DOES NOT DEVIATE FROM THE CONDITIONS DETAILED ON THIS DOCUMENT. CONSTRUCTION SAFETY AT SITE IS THE CONTRACTOR'S RESPONSIBILITY.

(c) THIS PRODUCT APPROVAL DOCUMENT WILL BE CONSIDERED INVALID IF MODIFIED.

(d) SITE SPECIFIC PROJECTS SHALL BE PREPARED BY A FLORIDA REGISTERED ENGINEER OR ARCHITECT WHICH WILL BECOME THE ENGINEER OF RECORD (E.O.R.) FOR THE PROJECT AND WHO WILL BE RESPONSIBLE FOR THE PROPER USE OF THE P.A.D. ENGINEER OF RECORD, ACTING AS DELEGATED ENGINEER TO THE P.A.D. ENGINEER, SHALL SUBMIT TO THIS LATTER THE SITE SPECIFIC DRAWINGS FOR REVIEW.

(e) THIS P.A.D. SHALL BEAR THE DATE AND ORIGINAL SEAL AND SIGNATURE OF THE PROFESSIONAL ENGINEER THAT PREPARED IT.

TYPICAL ANCHORS: (SEE CHARTS FOR ANCHOR SPACING)

TYPE A. 1/4" DIA. ITW TAPCON BY ITW BUILDEX
Fu = 120 KSI, Fy = 92 KSI
INTO CONCRETE fc'=3000 PSI
1-3/4" MIN. EMBED
2-1/2" MIN. EDGE DISTANCE

TYPE A1. INTO CONCRETE BLOCK
1-1/4" MIN. EMBED
2-1/2" MIN. EDGE DISTANCE

TYPE B. 1/4"-20 CALK-IN BY 'POWERS' FASTENERS
INTO CONCRETE fc'=3000 PSI
7/8" MIN. EMBED
3" MIN. EDGE DISTANCE

TYPE B1. INTO CONCRETE BLOCK
7/8" MIN. EMBED
3" MIN. EDGE DISTANCE

TYPE C. 1/4" CRETE-FLEX SS4 MASONRY ANCHOR BY "ELCO" CONSTRUCTION PRODUCTS
Fu = 120 KSI, Fy = 92 KSI
INTO CONCRETE fc'=3000 PSI
1 3/4" MIN. EMBED
2 1/2" MIN. EDGE DISTANCE

TYPE C1. INTO CONCRETE BLOCK
1 1/4" MIN. EMBED
2 1/2" MIN. EDGE DISTANCE

NOTES:

WHEN EDGE DISTANCE EQUAL OR GREATER THAN 2" AND LESS THAN MIN. EDGE DISTANCE SPECIFIED ABOVE THE ANCHOR SPACE IN ANCHOR CHARTS ON THE DRAWINGS MUST MULTIPLY BY FOLLOWING REDUCTION FACTOR:

ANCHOR TYPE A, & A1: REDUCTION FACTOR = 0.77
ANCHOR TYPE B & B1: REDUCTION FACTOR = 0.50
ANCHOR TYPE C & C1: REDUCTION FACTOR = 0.77

PLEASE NOTE THIS INSTALLATION ARE ONLY VALID FOR THE RESULTING ANCHOR SPACE EQUAL OR GREATER THAN 3".

PRODUCT REVISED
as complying with the Florida Building Code
Acceptance No 13-0326.01
Expiration Date 02/11/2018
By
Miami Dade Product Control

MIAMI DADE COUNTY

YIPING WANG
LICENSED
YIPING WANG, P.E.
FLORIDA REGISTRATION No. PE #55983
C.A.N. 28677
STATE OF FLORIDA
PROFESSIONAL ENGINEER

MAR 24 2012

REVISIONS

NO	DATE	DESCRIPTION
1	09/05/10	AS PER BCCO COMMENTS
2	03/25/12	UPDATE TO 2010 FBC

MCY ENGINEERING, INC.
GLAZING CONSULTANTS
8501 SW 124 AVE. STE 205A P: 305.271.0117
MIAMI, FL. 33183 F: 786.573.5063
www.MCYEngineering.com MCY.Engineering@Att.net

SYSTEM 2 ALUMINUM ACCORDION SHUTTER

HURRICANE PROTECTION MANUFACTURING ASSOCIATION
600 W. 83RD ST.
HIALEAH, FL. 33014
Tel: (786) 245 - 6777 Fax: (305) 817 - 9818

DATE	5-13-10
SCALE	
DRAWN	E. D.
PROJECT	10-04

DRAWING NO.
AD10-12

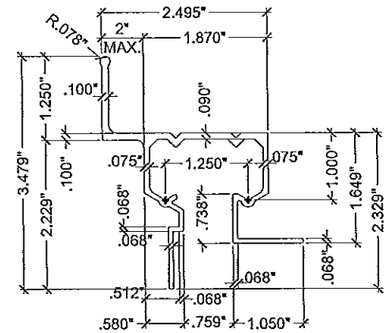

A WALL HEADER (& INVERTED)

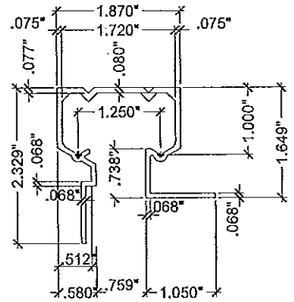

B CEILING HEADER

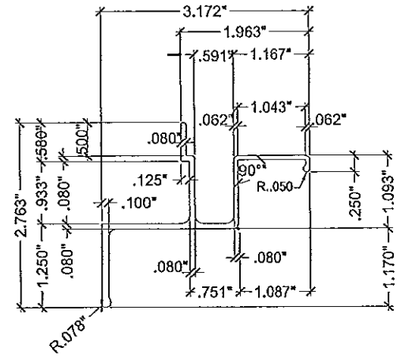

C WALL SILL

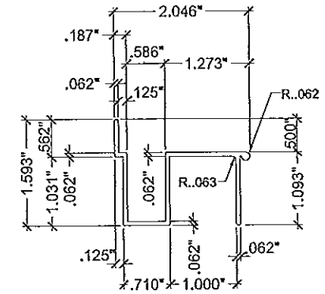

D FLOOR SILL
SCALE : 3/8" = 1"

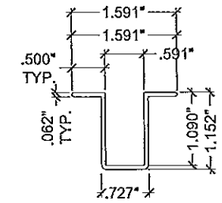

D1 FLOOR SILL
SCALE : 3/8" = 1"

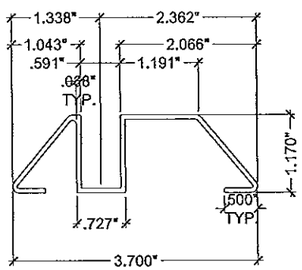

D2 THRESHOLD TRACK

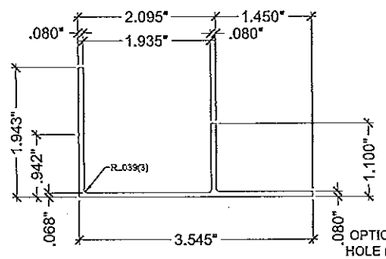

E ADJUSTABLE SILL ADAPTOR

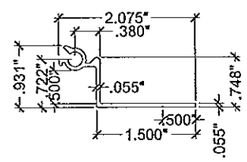

F 90° STARTER

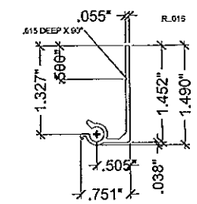

F1 180° MALE STARTER

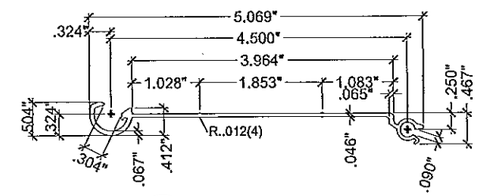

G MALE/FEMALE SOLID BLADE

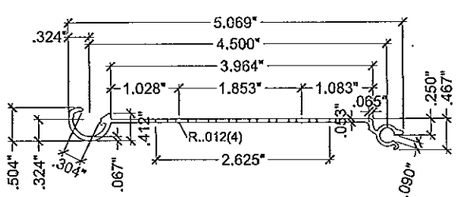

G' MALE/FEMALE PERFORATED BLADE

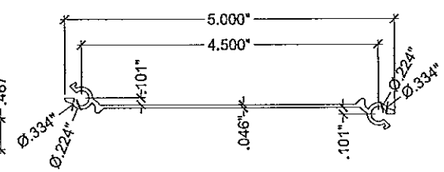

G1 MALE/MALE SOLID BLADE

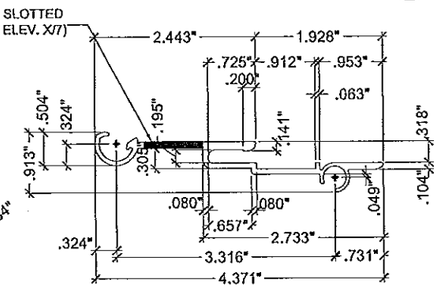

H FEMALE CENTERMATE BLADE
SCALE : 3/8" = 1"

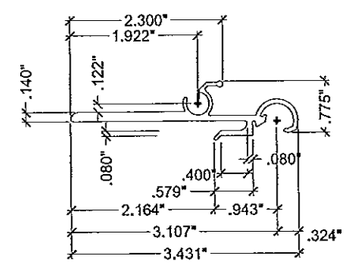

H1 MALE CENTERMATE BLADE
SCALE : 3/8" = 1"

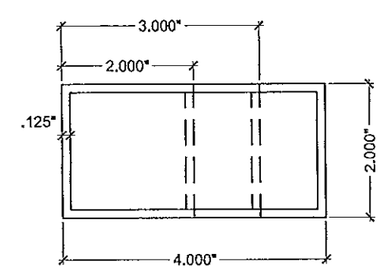

M ALUMINUM TUBES

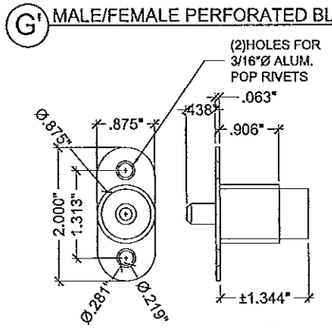

J BRASS NICKEL PLATED PUSH BUTTON LOCK

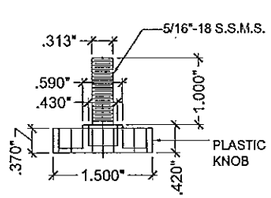

J1 5/16" Ø X 1" S.S.M.S W/ PLASTIC KNOB LOCK

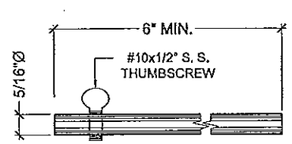

K LOCKING PIN (OPTIONAL)
SCALE : 3/8" = 1"

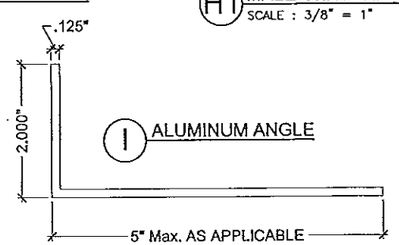

I ALUMINUM ANGLE

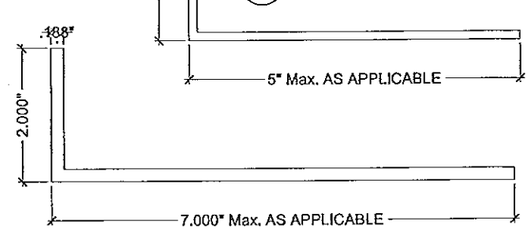

L1 ALUMINUM ANGLE

COMPONENTS

PRODUCT REVISED
as complying with the Florida Building Code
Acceptance No 13-0326.15
Expiration Date 02/17/2015
By
Miami Dade Product Control

MIAMI DADE COUNTY

YIPING WANG
LICENSE
YIPING WANG, P.E.
FLORIDA REGISTRATION No 55983
C.A.N. 28677
STATE OF FLORIDA
PROFESSIONAL ENGINEER

REVISIONS		
NO.	DATE	DESCRIPTION
1	09/05/10	AS PER BCCO COMMENTS
2	03/25/12	UPDATE TO 2010 FBC

MCY ENGINEERING, INC.
GLAZING CONSULTANTS
8501 SW 124 AVE. STE 205A
MIAMI, FL 33183
P: 305.271.0117
F: 786.573.5063
www.MCYEngineering.com
MCY.Engineering@Att.net

SYSTEM 2 ALUMINUM ACCORDION SHUTTER
HURRICANE PROTECTION MANUFACTURING ASSOCIATION
600 W. 83RD ST.
HIALEAH, FL. 33014
Tel: (786) 245 - 6777 Fax: (305) 817 - 9818

DATE	5-13-10
SCALE	
DRAWN	E. D.
PROJECT	10-04

DRAWING NO.
AD10-12

MAR 24 2012

MAXIMUM DESIGN PRESSURE RATING "Pd" (PSF) AND CORRESPONDING MAXIMUM SPAN "L" SCHEDULE.

MAXIMUM DESIGN LOAD "Pd" (PSF)	MAXIMUM SHUTTER SPAN FOR ALL SECTIONS		MINIMUM SEPARATION TO GLASS (in.) ALL SECTIONS
	Max. PANEL LENGTH L+ (ft.)	Max. PANEL LENGTH L- (ft.)	
40	13'-2"	14'-1"	3.0
45	12'-9"	14'-1"	3.0
50	12'-5"	14'-1"	3.0
55	12'-2"	13'-5"	3.0
60	11'-11"	12'-10"	3.0
65	11'-8"	12'-4"	3.0
70	11'-5"	11'-11"	3.0
75	11'-3"	11'-6"	3.0
80	11'-1"	11'-2"	3.0
85	10'-10"	10'-10"	3.0
90	10'-6"	10'-6"	3.0
95	10'-3"	10'-3"	2.875
100	10'	10'	2.875
105	9'-9"	9'-9"	2.625
110	9'-6"	9'-6"	2.5
115	9'-4"	9'-4"	2.5
120	9'-1"	9'-1"	2.5
125	8'-10"	8'-10"	2.5
130	8'-6"	8'-6"	2.375
135	-	8'-2"	2.375
140	-	7'-11"	2.375
145	-	7'-7"	2.375
150	-	7'-4"	2.375
155	-	7'-2"	2.375
160	-	6'-11"	2.375
165	-	6'-8"	2.375
170	-	6'-6"	2.375
175	-	6'-4"	2.375
180	-	6'-2"	2.375
185	-	6'	2.375
190	-	5'-10"	2.375
195	-	5'-8"	2.375

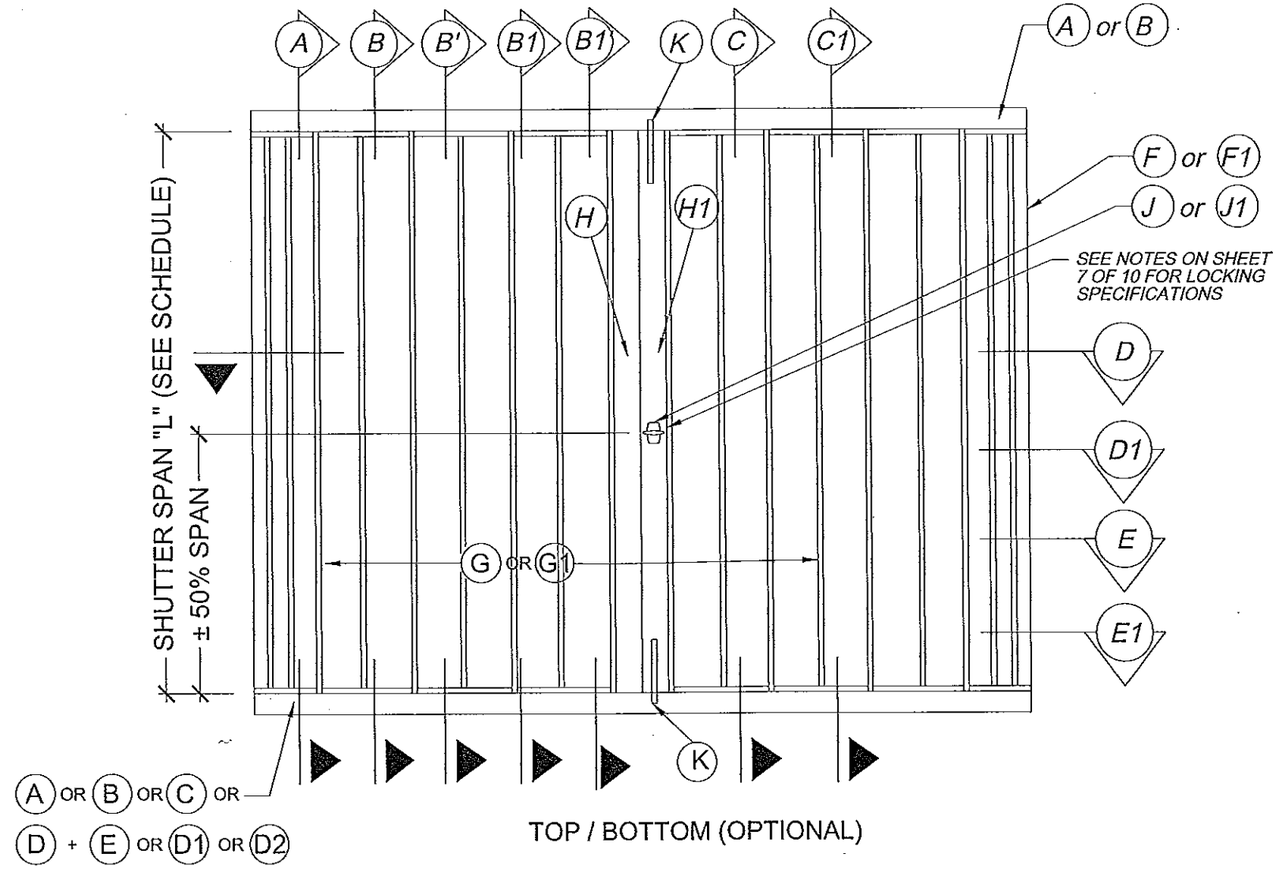

TYPICAL ELEVATION

N.T.S.

INSTRUCTION:

STEP 1 DETERMINE DESIGN WIND LOAD REQUIREMENT BASED ON VELOCITY, BUILDING HEIGHT, WIND ZONE USING APPLICABLY ASCE 7 STANDARD.

STEP 2 CHECK SHUTTER CAPACITY FOR A GIVEN SHUTTER SPAN USING CHARTS ON SHEET 3. MAX. DESIGN LOAD FROM CHART HAS TO BE GREATER THAN DESIGN WIND LOAD FROM STEP 1.

STEP 3 USING CHARTS ON SHEET 4 THRU SHEET 10 SELECT ANCHOR TYPE AND SPACING BASED ON DESIGN LOAD AND SHUTTER SPAN FOR THE ANCHOR DETAIL USED.

PRODUCT REVISED
as complying with the Florida Building Code
Acceptance No 13-0326.1
Expiration Date 02/17/2015
By
Miami Dade Product Control

MIAMI DADE COUNTY

YIPING WANG
LICENSE
YIPING WANG, P.E.
FLORIDA REGISTRATION
No. 53983
PE #53983
C.A.N. 28677
STATE OF FLORIDA
PROFESSIONAL ENGINEER

MAR 24 2012

REVISIONS		
NO	DATE	DESCRIPTION
1	09/26/10	AS PER BCCO COMMENTS
2	03/26/12	UPDATE TO 2010 FBC

MCY ENGINEERING, INC.
GLAZING CONSULTANTS
8501 SW 124 AVE. STE 205A
MIAMI, FL 33183
P: 305.271.0117
F: 786.573.5063
www.MCYEngineering.com
MCY.Engineering@Att.net

SYSTEM 2 ALUMINUM ACCORDION SHUTTER
HURRICANE PROTECTION MANUFACTURING ASSOCIATION
600 W. 83RD ST.
HIALEAH, FL. 33014
Tel: (786) 245 - 6777 Fax: (305) 817 - 9818

DATE	5-13-10
SCALE	
DRAWN	E. D.
PROJECT	10-04

DRAWING NO.
AD10-12

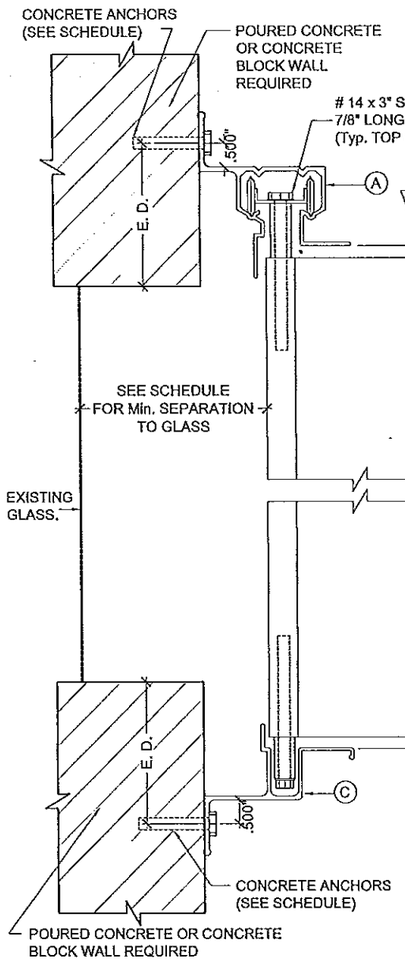

WALL MOUNTING INSTALLATION
SECTION A
SCALE : 3/8" = 1"

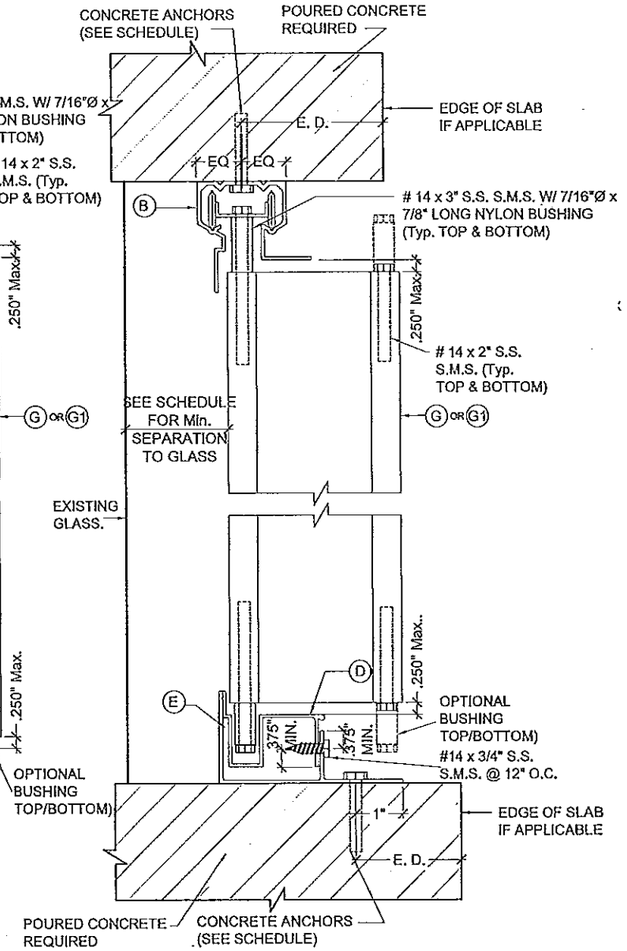

CEILING & FLOOR MOUNTING INSTALLATION
SECTION B
SCALE : 3/8" = 1"

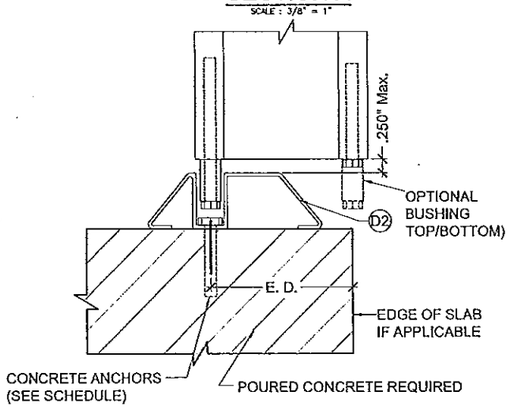

FLOOR MOUNTING INSTALLATION
SECTION B1
SCALE : 3/8" = 1"

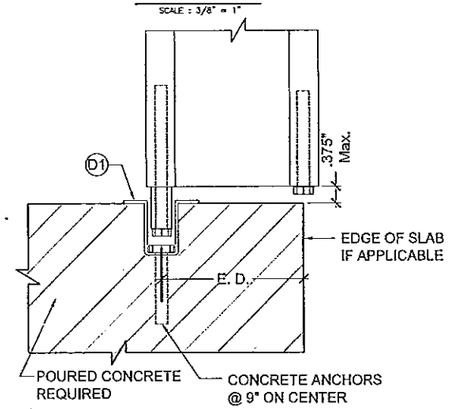

FLOOR MOUNTING INSTALLATION
SECTION B2
SCALE : 3/8" = 1"

MAXIMUM DESIGN PRESSURE RATING "Pd" (PSF) AND CORRESPONDING MAXIMUM ANCHOR SPACING (in.) SCHEDULE. +

MAXIMUM DESIGN LOAD "Pd" (PSF)	SHUTTER SPAN (INCH)	SECTION A (TOP/BOTTOM)						SECTION B (TOP/BOTTOM) B1 (BOTTOM)		
		SUBSTRATE CONCRETE			SUBSTRATE BLOCK			SUBSTRATE CONCRETE		
		ANCHOR TYPE A	ANCHOR TYPE B	ANCHOR TYPE C	ANCHOR TYPE A1	ANCHOR TYPE B1	ANCHOR TYPE C1	ANCHOR TYPE A	ANCHOR TYPE B	ANCHOR TYPE C
60	60"	9	9	9	4.5	4	7	6	6	6
	78	9	9	9	3.5	3	5.5	6	6	6
	96	8	7.5	8	-	-	4.5	6	6	6
	120"	6	6	6.5	-	-	3.5	6	6	6
	144"	5	5	5.5	-	-	3	6	6	6
	154"	5	4.5	5	-	-	-	6	6	6
65	60"	9	9	9	4	3.5	6.5	6	6	6
	78	9	8.5	9	3	-	5	6	6	6
	96	7	7	7.5	-	-	4	6	6	6
	120"	5.5	5.5	6	-	-	3	6	6	6
	148"	4.5	4.5	4.5	-	-	-	6	5.5	6
70	60"	9	9	9	4	3.5	6	6	6	6
	78	8	8	8.5	3	-	4.5	6	6	6
	96	6.5	6.5	7	-	-	3.5	6	6	6
	120"	5.5	5	5.5	-	-	3	6	6	6
	143"	4.5	4.5	4.5	-	-	-	5.5	5.5	6
80	60"	9	9	9	3.5	3	5	6	6	6
	78	7	7	7.5	-	-	4	6	6	6
	96	6	5.5	6	-	-	3	6	6	6
	120"	4.5	4.5	5	-	-	-	6	6	6
	134"	4	4	4.5	-	-	-	5.5	5	6
100	60"	7.5	7.5	8	-	-	4	6	6	6
	78	5.5	5.5	6	-	-	3	6	6	6
	96	4.5	4.5	5	-	-	-	6	6	6
	120"	3.5	3.5	4	-	-	-	5	4.5	6
195	60"	3.5	3.5	4	-	-	-	5	4.5	6
	66"	3.5	3	3.5	-	-	-	4.5	4	5.5

PRODUCT REVISED
as complying with the Florida Building Code
Acceptance No 13-0326.15
Expiration Date 2/17/2015
By
Miami Dade Product Control
MIAMI DADE COUNTY

YIPING WANG, P.E.
FLORIDA REGISTRATION
PE #55983
No CA 9677
STATE OF FLORIDA
PROFESSIONAL ENGINEER

MAR 24 2012

REVISIONS		
NO.	DATE	DESCRIPTION
1.	09/25/10	AS PER BCCO COMMENTS
2.	03/25/12	UPDATE TO 2010 FBC

MCY ENGINEERING, INC.
GLAZING CONSULTANTS
8501 SW 124 AVE. STE 205A
MIAMI, FL 33183
P: 305.271.0117
F: 786.573.5063
www.MCYEngineering.com
MCY.Engineering@Att.net

SYSTEM 2 ALUMINUM ACCORDION SHUTTER
HURRICANE PROTECTION MANUFACTURING ASSOCIATION
600 W. 83RD ST.
HIALEAH, FL. 33014
Tel: (786) 245 - 6777 Fax: (305) 817 - 9818

DATE	5-13-10
SCALE	
DRAWN	E. D.
PROJECT	10-04

DRAWING NO.
AD10-12

MAXIMUM DESIGN PRESSURE RATING "Pd" (PSF) AND CORRESPONDING MAXIMUM ANCHOR SPACING (in.) SCHEDULE. +

MAXIMUM DESIGN LOAD "Pd" (PSF)	SHUTTER SPAN (INCH)	SECTION C TOP/BOTTOM						SECTION C1 BOTTOM					
		SUBSTRATE CONCRETE			SUBSTRATE BLOCK			SUBSTRATE CONCRETE			SUBSTRATE BLOCK		
		ANCHOR TYPE A	ANCHOR TYPE B	ANCHOR TYPE C	ANCHOR TYPE A1	ANCHOR TYPE B1	ANCHOR TYPE C1	ANCHOR TYPE A	ANCHOR TYPE B	ANCHOR TYPE C	ANCHOR TYPE A1	ANCHOR TYPE B1	ANCHOR TYPE C1
60	60"	6	6	6	6	5.5	6	6	6	6	6	6	6
	78"	6	6	6	5	4.5	6	6	6	6	5.5	4.5	6
	96"	6	6	6	4	3.5	6	6	6	6	4.5	4	6
	120"	6	6	6	3	-	5	6	6	6	3.5	3	5.5
	144"	6	6	6	-	-	4	6	6	6	-	-	4.5
	154"	6	6	6	-	-	4	6	6	6	-	-	4
65	60"	6	6	6	6	5	6	6	6	6		5.5	6
	78	6	6	6	4.5	4		6	6	6	5	4.5	6
	96	6	6	6	3.5	3	5.5	6	6	6	4	3.5	6
	120"	6	6	6	3	-	4.5	6	6	6	3	-	5
	148"	6	6	6	-	-	3.5	6	6	6	-	-	4
70	60"	6	6	6	5.5	5	8.5	6	6	6	6	5.5	6
	78	6	6	6	4	3.5	6.5	6	6	6	4.5	4	6
	96	6	6	6	3.5	3	5.5	6	6	6	3.5	3	6
	120"	6	6	6	-	-	4	6	6	6	3	-	4.5
	143"	6	6	6	-	-	3.5	6	6	6	-	-	4
80	60"	6	6	6	4.5	4	7.5	6	6	6	5	4.5	6
	78	6	6	6	3.5	3	5.5	6	6	6	4	3.5	6
	96	6	6	6	3	-	4.5	6	6	6	3	3	5
	120"	6	6	6	-	-	3.5	6	6	6	-	-	4
	134"	6	5.5	6	-	-	3	6	6	6	-	-	3.5
100	60"	6	6		3.5	3.5	6	6	6	6	4	3.5	6
	78	6	6		3	-	4.5	6	6	6	3	-	5
	96	6	6		-	-	3.5	6	6	6	-	-	4
	120"	5	5	5.5	-	-	3	5	5.5	6	-	-	3
195	60"	5	5	5.5	-	-	3	5	5.5	6	-	-	3
	66"	4.5	4.5	5	-	-	-	5	5	5.5	-	-	3

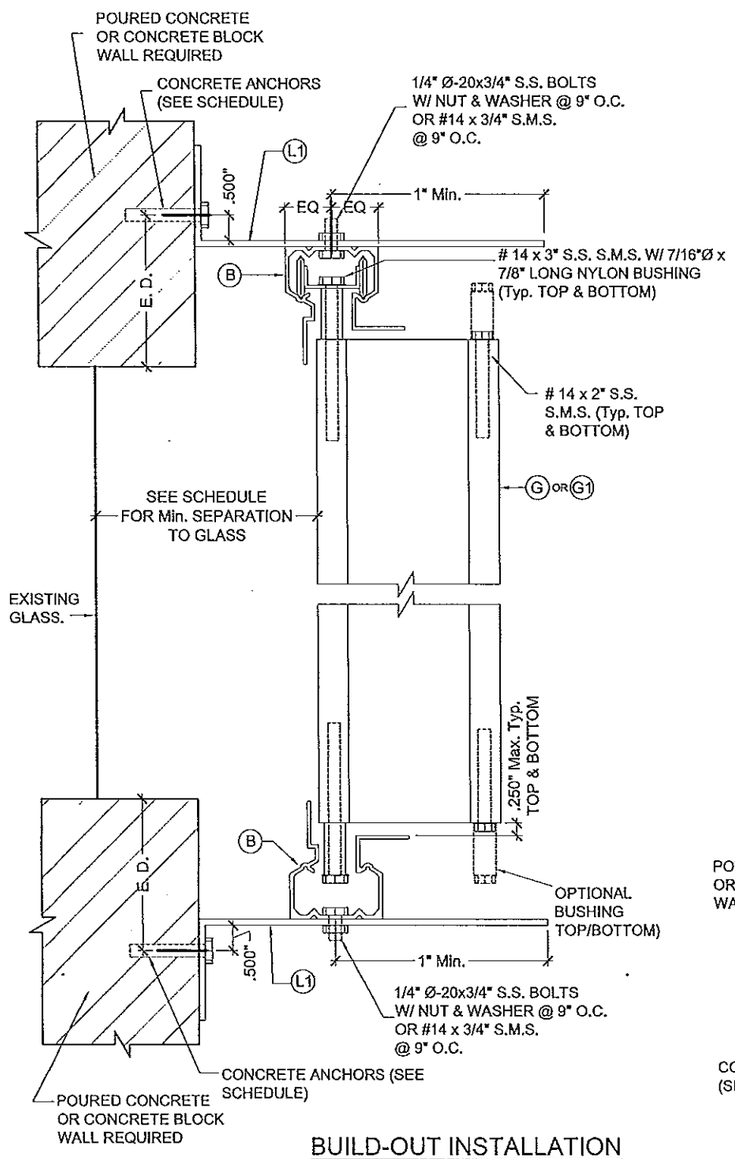

BUILD-OUT INSTALLATION
SECTION C

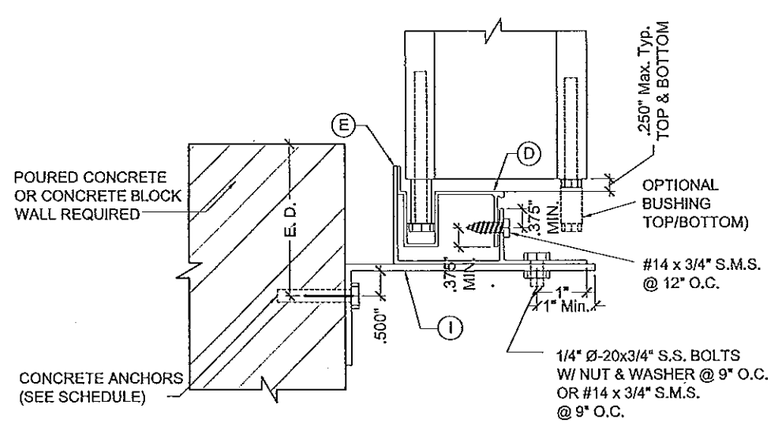

BUILD-OUT INSTALLATION
SECTION C1

PRODUCT REVISED
as complying with the Florida Building Code
Acceptance No 13-0326.01
Expiration Date 2/17/12
By
Miami Dade Product Control
MIAMI DADE COUNTY

YIPING WANG
YIPING WANG, P.E.
FLORIDA REGISTRATION
PE #55983
C.A.N. 28677
STATE OF FLORIDA
PROFESSIONAL ENGINEER

MAR 24 2012

REVISIONS		
NO	DATE	DESCRIPTION
1	08/06/10	AS PER BCCO COMMENTS
2	02/25/12	UPDATE TO 2010 FBC

MCY ENGINEERING, INC.
GLAZING CONSULTANTS
8501 SW 124 AVE. STE 205A
MIAMI, FL 33183
P: 305.271.0117
F: 786.573.5063
www.MCYEngineering.com
MCY.Engineering@Att.net

SYSTEM 2 ALUMINUM ACCORDION SHUTTER
HURRICANE PROTECTION MANUFACTURING ASSOCIATION
600 W. 83RD ST.
HIALEAH, FL. 33014
Tel: (786) 245 - 6777 Fax: (305) 817 - 9818

DATE	5-13-10
SCALE	
DRAWN	E. D.
PROJECT	10-04

DRAWING NO.
AD10-12

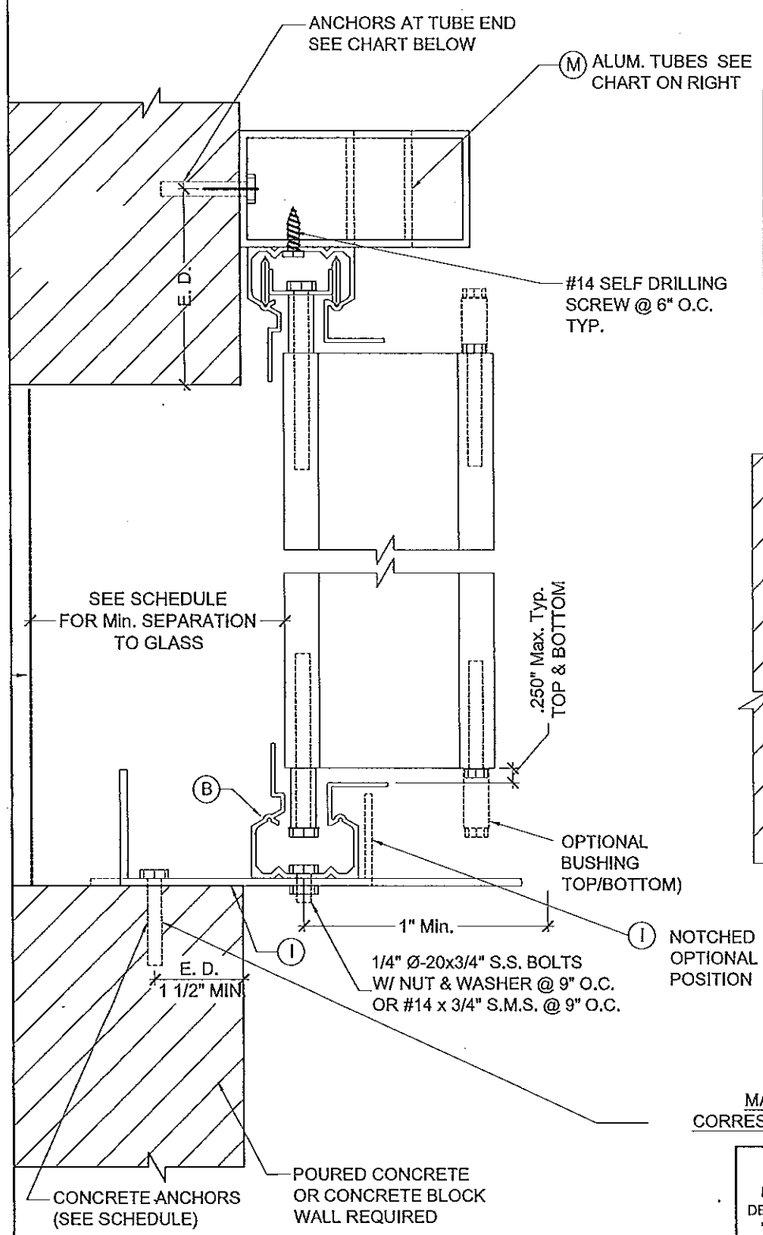

BUILD-OUT INSTALLATION
SECTION M

ALUM. TUBE SIZE	OPEN'G WIDTH	MAX. HEIGHT	DESIGN LOAD (PSF)	
			ANCHOR TYPE "A"	ANCHOR TYPE "C"
2"x2"x1/8"	42"	88"	65	65
2"x3"x1/8"	60"	88"	65	65
2"x4"x1/8"	78"	88"	57.3	62
	78"	84"	60	65
	78"	77"	65	65

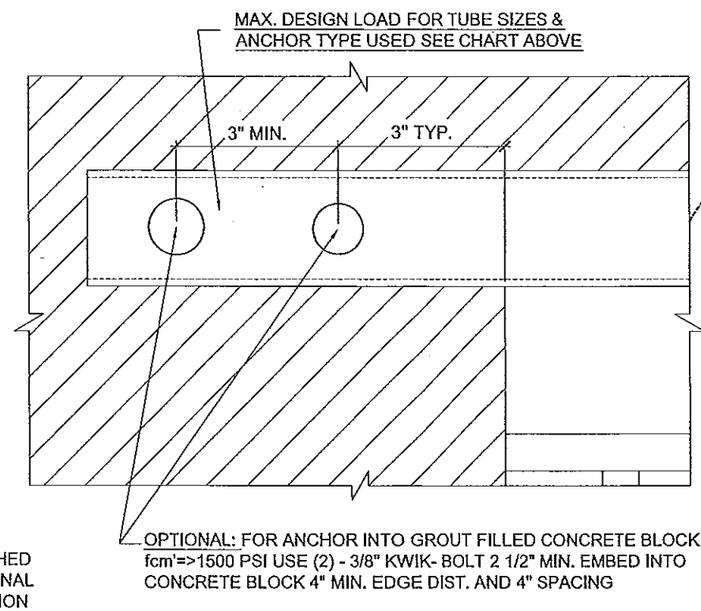

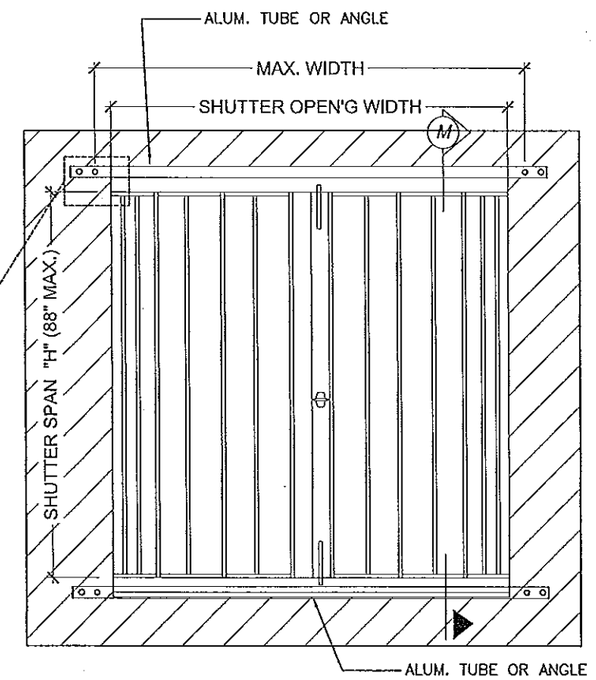

TOP / BOTTOM (OPTIONAL)

MAXIMUM DESIGN PRESSURE RATING "Pd" (PSF) AND CORRESPONDING MAXIMUM ANCHOR SPACING (in.) SCHEDULE. +

MAXIMUM DESIGN LOAD "Pd" (PSF)	SHUTTER SPAN (INCH)	SECTION M BOTTOM	
		SUBSTRATE CONCRETE	
		ANCHOR SPACING (in.)	
		ANCHOR TYPE A	ANCHOR TYPE C
65	60"	8.5	9
	72"	7	7.5
	84"	6	6.5
	88"	5.5	6

PRODUCT REVISED
as complying with the Florida Building Code
Acceptance No 13-0326.15
Expiration Date 02/17/2015
By
Miami Dade Product Control

MIAMI DADE COUNTY

YIPING WANG, P.E.
LICENSE
YIPING WANG, P.E.
FLORIDA REGISTRATION
PE #55983
NCARB 28677
STATE OF FLORIDA
PROFESSIONAL ENGINEER

MAR 24 2012

REVISIONS

NO.	DATE	DESCRIPTION
1	06/02/10	AS PER BCCO COMMENTS
2	03/22/12	UPDATE TO 2010 FBC

MCY ENGINEERING, INC.
GLAZING CONSULTANTS
8501 SW 124 AVE. STE 205A
MIAMI, FL 33183
P: 305.271.0117
F: 786.573.5063
www.MCYEngineering.com
MCY.Engineering@Att.net

SYSTEM 2 ALUMINUM ACCORDION SHUTTER
HURRICANE PROTECTION MANUFACTURING ASSOCIATION
600 W. 83RD ST.
HIALEAH, FL. 33014
Tel: (786) 245 - 6777 Fax: (305) 817 - 9818

DATE	5-13-10
SCALE	
DRAWN	E. D.
PROJECT	10-04

DRAWING NO.
AD10-12

6 OF 10

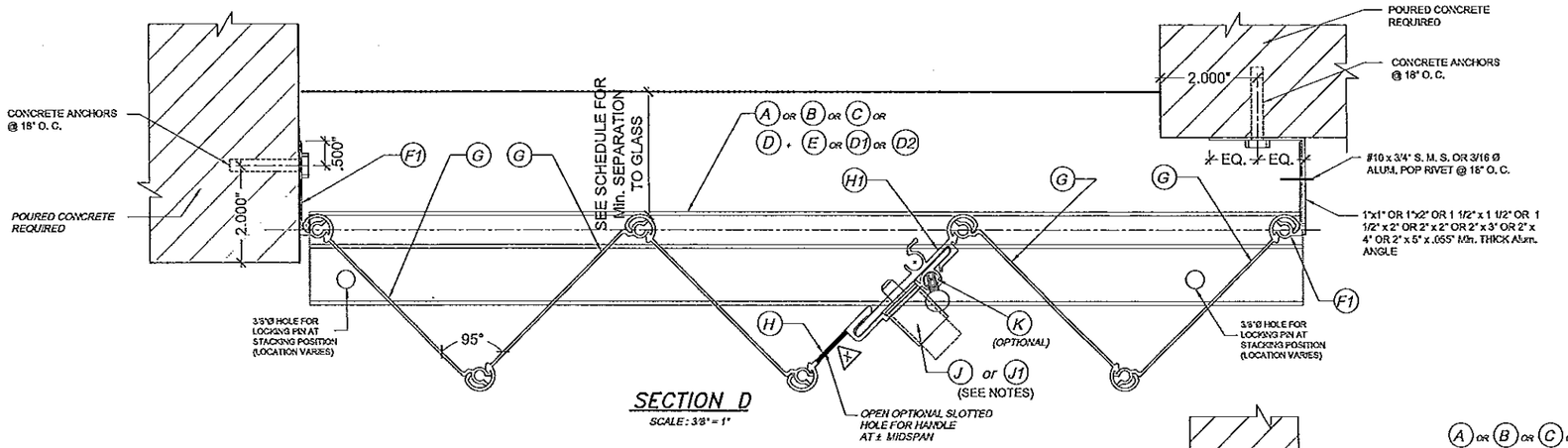

SECTION D

SCALE : 3/8" = 1"

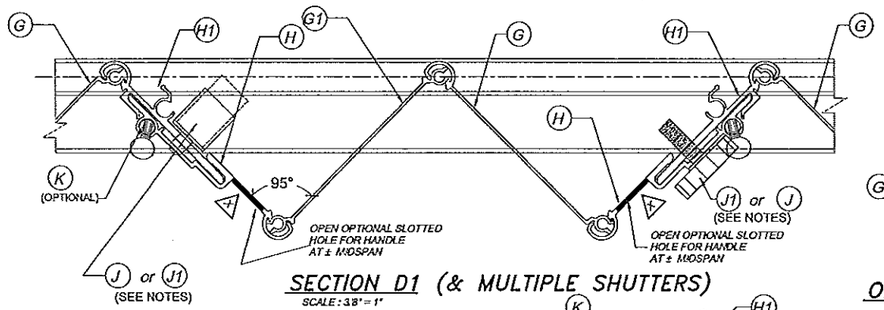

SECTION D1 (& MULTIPLE SHUTTERS)

SCALE : 3/8" = 1"

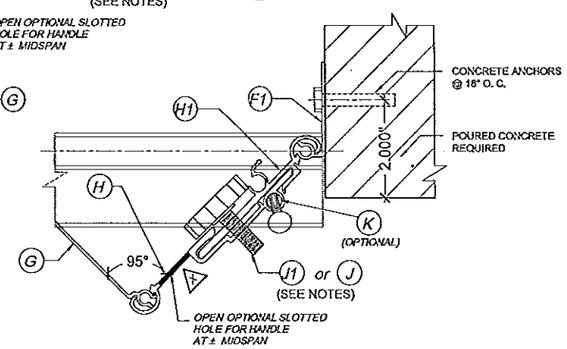

ONE SIDED SECTION : END CONNECTION DETAIL

SCALE : 3/8" = 1"

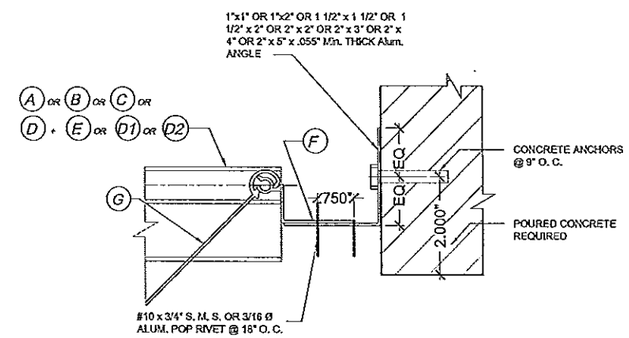

ALTERNATE CLOSURE DETAIL W / (F)

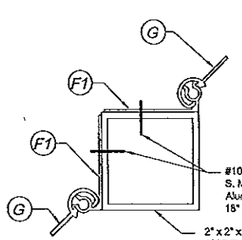

SECTION E

SCALE : 3/8" = 1"

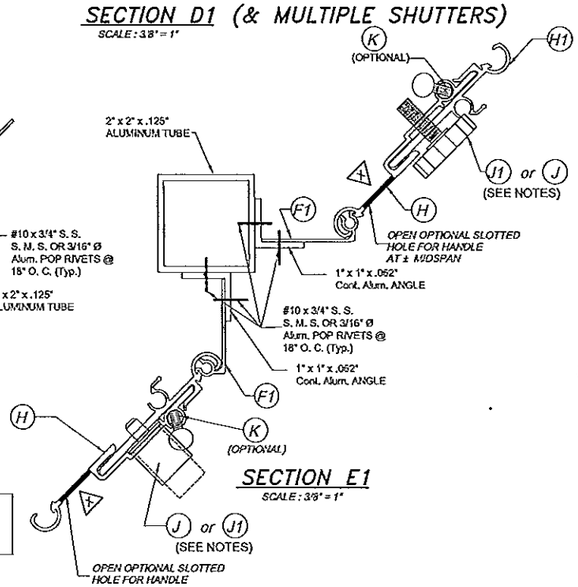

SECTION E1

SCALE : 3/8" = 1"

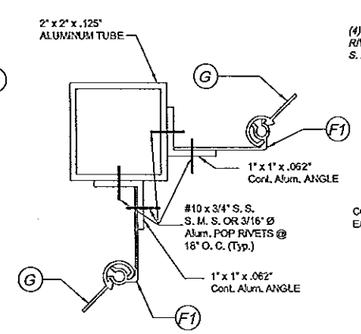

SECTION E2

SCALE : 3/8" = 1"

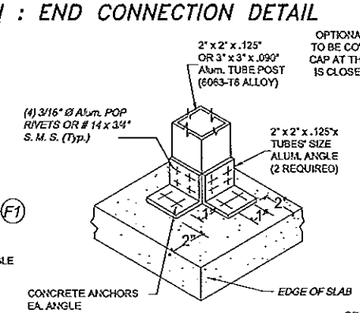

ISOMETRIC (CORNER POST)

(Typ. AT TOP & BOTTOM SLABS)

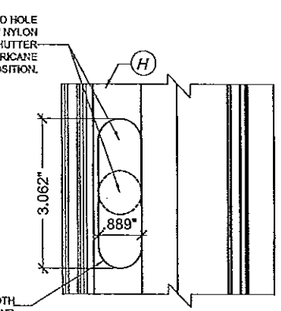

ELEVATION X

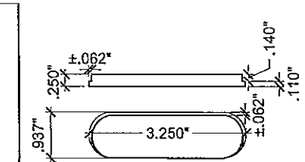

NYLON CAP DETAIL

NOTE:
SECTIONS SHOWN CAN BE COMBINED TO SUIT ANY INSTALLATION.

NOTES FOR LOCKING OF (H) & (H1)

1-PUSH BOTTOM LOCK (J) MAY BE USED FOR INSTALLATIONS SECURED FROM THE OUTSIDE OR INSIDE OF SHUTTER. WHEN INSTALLING (J) FROM THE OUTSIDE, A 7/8"Ø HOLE SHALL BE DRILLED AT (H) AND (J) MUST BE RIVETED FROM THE BACK OF (H) TO THE FRONT W/ (2)3/16"Ø ALUM. POP RIVETS. A 3/8"Ø HOLE MUST THEN BE DRILLED AT (H1) TO ALLOW FOR (J)'S PIN TO PASS THRU.
WHEN INSTALLING (J) FROM THE INSIDE, (J) MUST BE RIVETED TO (H) W/(2)3/16"Ø ALUM. POP RIVETS. A 3/8"Ø HOLE MUST THEN BE DRILLED THRU (H) AND (H1) TO ALLOW FOR (J)'S PIN TO PASS THRU.

2-5/16"x1" LOCK (H1) MAY BE USED ALTERNATIVELY TO (J) LOCK FOR INSTALLATIONS SECURED FROM THE OUTSIDE OR INSIDE OF SHUTTER. IN THIS CASE, A 5/16"Ø HOLE SHALL BE DRILLED THRU (H) AND (H1). HOLE DRILLED TO (H1) SHALL BE TAPPED TO ACCEPT 18 THREADS PER INCH MACHINE SCREW.

PRODUCT REVISED
as complying with the Florida Building Code
Acceptance No. 13-0326.15
Expiration Date 02/17/2015
By
Miami Dade Product Control
MIAMI DADE COUNTY

YIPING WANG
YIPING WANG, P.E.
FLORIDA REGISTRATION
PE #56983
C.A.N. 28677
STATE OF FLORIDA
PROFESSIONAL ENGINEER

REVISIONS		
NO.	DATE	DESCRIPTION
1	06/26/10	AS PER BCCO COMMENTS
2	03/26/12	UPDATE TO 2010 FBC

MCY ENGINEERING, INC.
GLAZING CONSULTANTS
8501 SW 124 AVE. STE 205A
MIAMI, FL 33183
P: 305.271.0117
F: 786.573.5063
www.MCYEngineering.com
MCY.Engineering@Att.net

SYSTEM 2 ALUMINUM ACCORDION SHUTTER
HURRICANE PROTECTION MANUFACTURING ASSOCIATION
600 W. 83RD ST.
HIALEAH, FL. 33014
Tel: (786) 245 - 6777 Fax: (305) 817 - 9818

DATE	5-13-10
SCALE	
DRAWN	E. D.
PROJECT	10-04

DRAWING NO.
AD10-12

MAR 24 2012

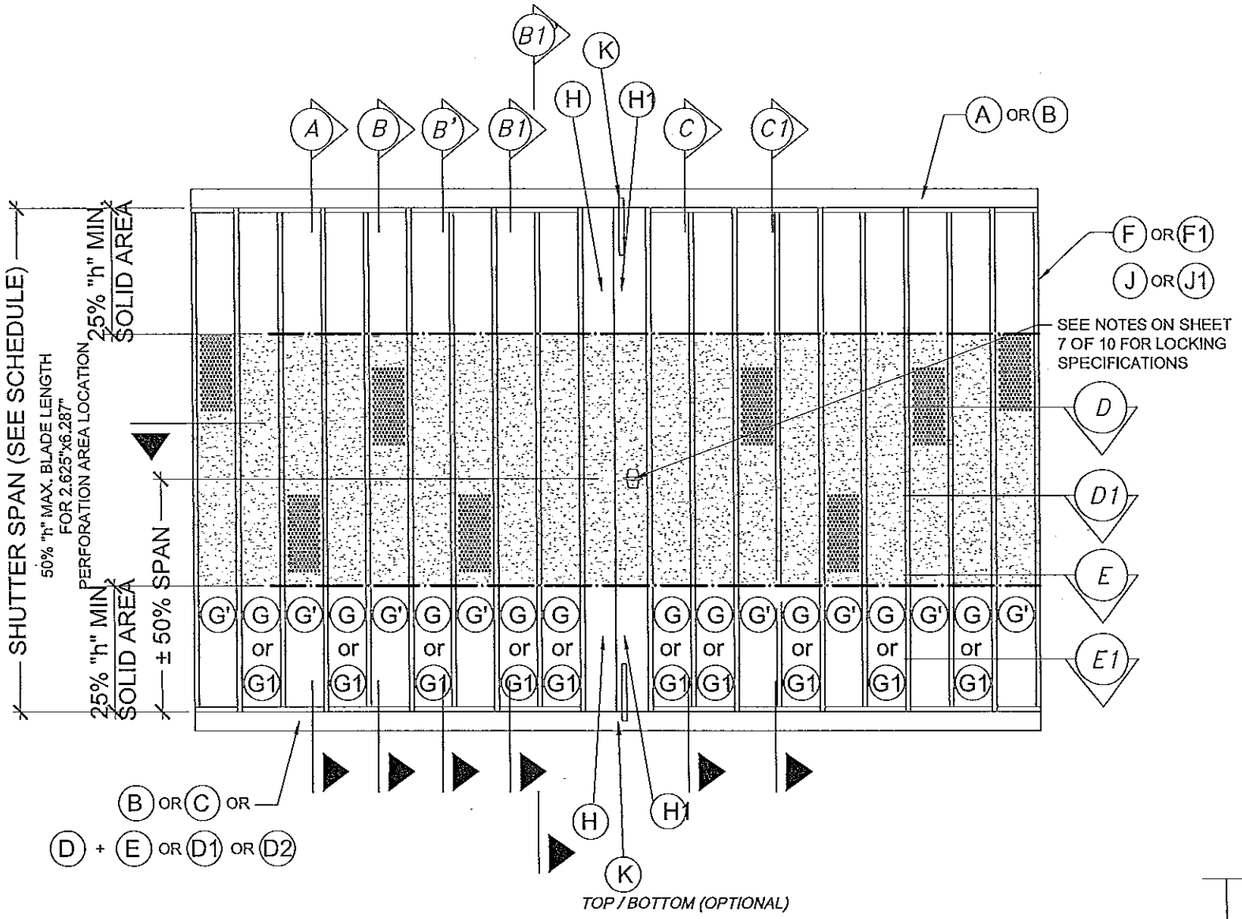

TYPICAL ELEVATION

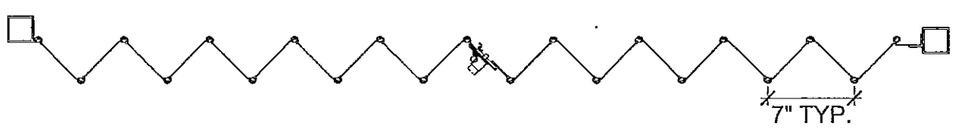

TYPICAL SHUTTER PLAN

GENERAL LIMITATIONS AND CONDISTIONS OF USE FOR G OR G1 BLADE ACCORDIAN SHUTTER SYSTEM WORKING IN UNISON WITH G' BLADES.

1. MAXIMUM SHUTTER SPAN AND PRESSURE RATING, MAXIMUM ANCHOR SPACING AND MINIMUM SEPARATION TO GLASS FOR G' AND G1' WORKING IN UNISON WITH G AND G1 ARE AS PER SCHEDULES ON SHEET 3, 4, 5 & 9.

2. MAXIMUM PERFORATION AREA AT G', G1' IS ± 2.625" x 6.28" AND MUST BE LOCATED WITHIN THE CENTRAL 50% OF THE BLADE SPAN.

   PERFORATED BLADES G, G1 MUST BE SOLID AT THE TOP AND BOTTOM 25% OF BLADES SPAN.

3. PERFORATED BLADES G', G1' SHALL BE INSTALLED AT EVERY OTHER BLADE (FREQUENCY).

4. CENTERMATES H, H1 MUST ALWAYS BE ACCOMPANIED BY TWO SOLID BLADES G, G1 AT EITHER SIDE OF EACH CENTERMATE.

5. STARTERS AND CENTERMATES MUST BE ALWAYS SOLID.

6. STARTERS CONNECTION TO EXISTING BUILDING OR TO END/CORNER TUBES MUST BE AS PER DETAILS INDICATED ON SHEET 7.

SECTION S-S THRU G MALE/FEMALE BLADE

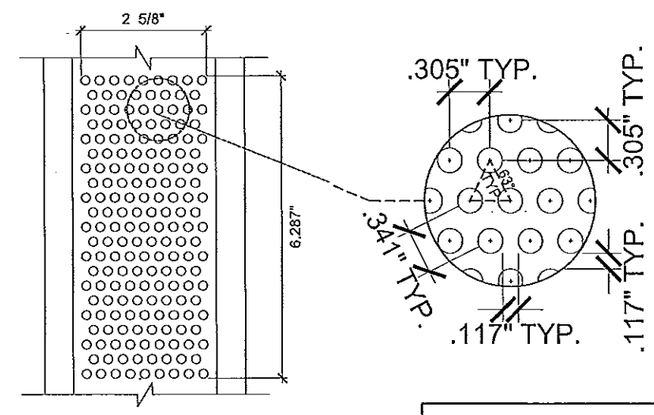

TYPICAL G' PERFORATED BLADE ELEVATION

PRODUCT REVISED
as complying with the Florida Building Code
Acceptance No 13-0326.15
Expiration Date 02/17/2015
By
Miami Dade Product Control

MIAMI DADE COUNTY

YIPING WANG
YIPING WANG, P.E.
FLORIDA REGISTRATION
PE #65983
NOA.N. 28677
STATE OF FLORIDA
PROFESSIONAL ENGINEER

MAR 24 2012

REVISIONS

NO	DATE	DESCRIPTION
1	08/06/10	AS PER BCCO COMMENTS
2	03/26/12	UPDATE TO 2010 FBC

MCY ENGINEERING, INC.
GLAZING CONSULTANTS
8501 SW 124 AVE. STE 205A
MIAMI, FL. 33183
P: 305.271.0117
F: 786.573.5063
www.MCYEngineering.com
MCY.Engineering@Att.net

SYSTEM 2 ALUMINUM ACCORDION SHUTTER
HURRICANE PROTECTION MANUFACTURING ASSOCIATION
600 W. 83RD ST.
HIALEAH, FL. 33014
Tel: (786) 245 - 6777 Fax: (305) 817 - 9818

DATE	5-13-10
SCALE	
DRAWN	E. D.
PROJECT	10-04

DRAWING NO.
AD10-12

SPECIAL HI-PRESSURE RATING FOR FLOOR TO CEILING INSTALLATIONS W/ B', C', D' TRACKS & BLADES G2, G2A

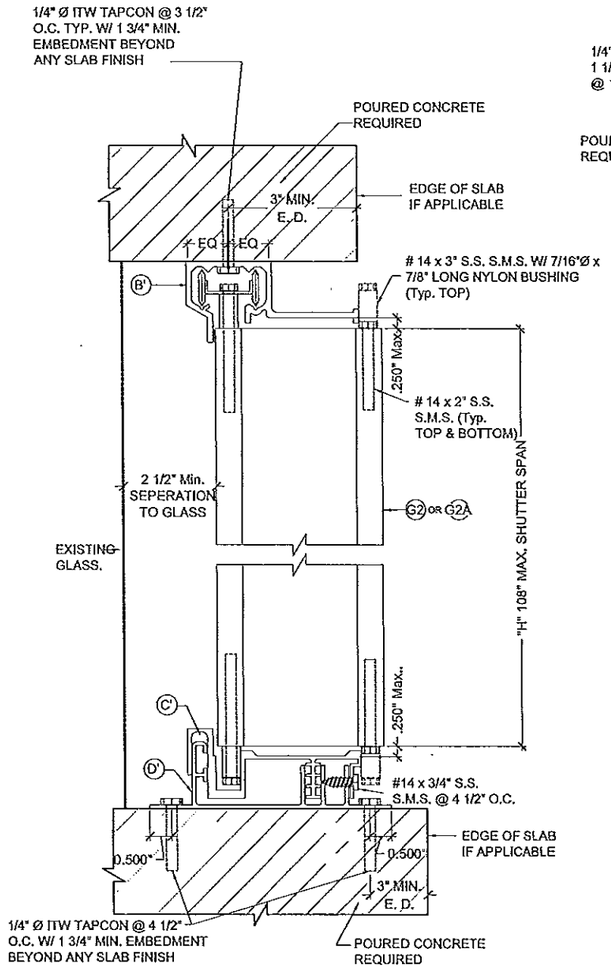

CEILING & FLOOR MOUNTING INSTALLATION SECTION F

SCALE : 3/8" = 1"

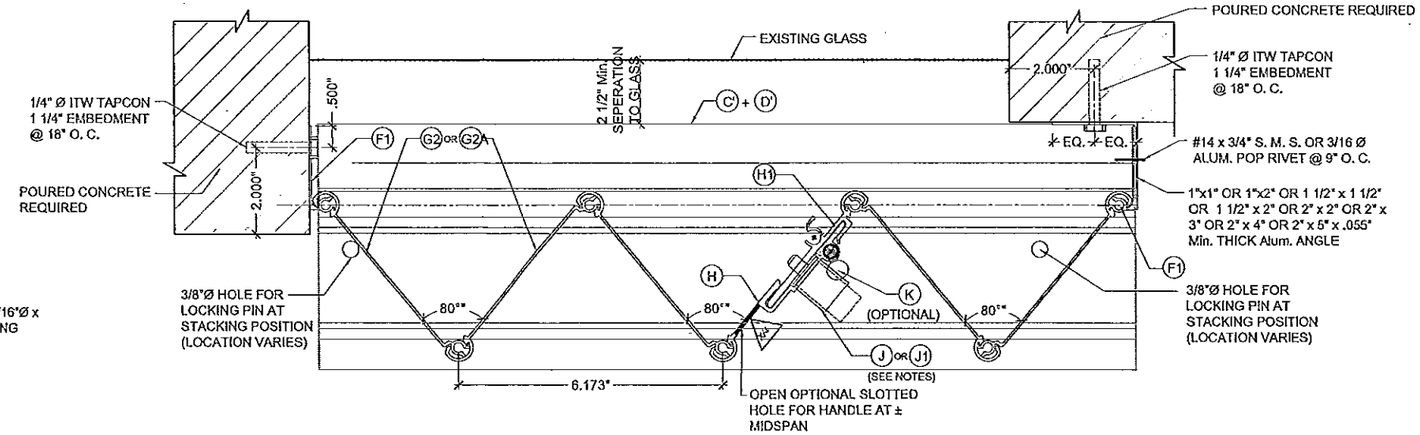

SECTION G-G

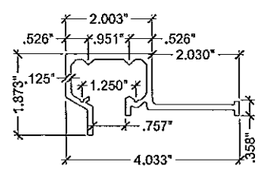

B' HEAVY DUTY CEILING HEADER

6063-T6 ALLOY

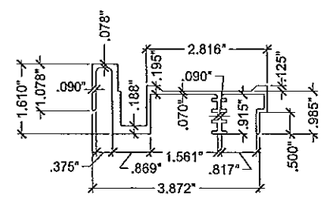

C' HEAVY DUTY SILL

6063-T6 ALLOY

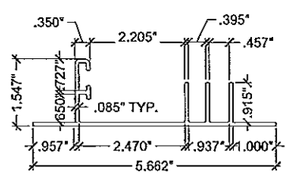

D' HEAVY DUTY ADJUSTABLE SILL ADAPTOR

SCALE : 3/8" = 1"

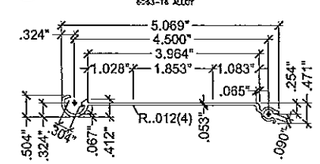

G2 MALE/FEMALE SOLID BLADE

6063-T6 ALLOY

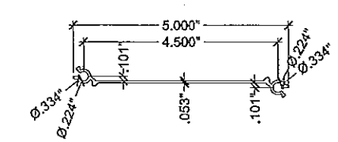

G2A MALE/MALE SOLID BLADE

6063-T6 ALLOY

COMPONENTS

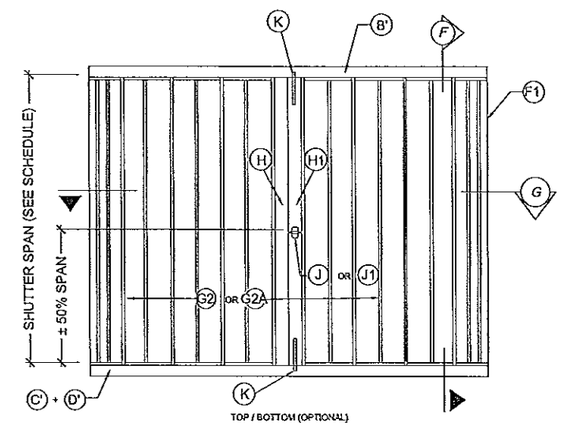

TYPICAL ELEVATION WITH G2 AND G2A SOLID BLADE HEAVY DUTY SYSTEM

DESIGN LOAD:

MAX Pd = + 120.0 psf
- 138.7 psf

PRODUCT REVISED
as complying with the Florida Building Code
Acceptance No 13-0326.01
Expiration Date 02/17/2016
By
Miami Dade Product Control

MIAMI DADE COUNTY

YIPING WANG
YIPING WANG, P.E.
FLORIDA REGISTRATION
PE #55983
N.C.A.R. 28677
STATE OF FLORIDA
PROFESSIONAL ENGINEER

MAR 24 2012

REVISIONS			
NO	DATE	DESCRIPTION	
1	09/05/10	AS PER BCCO COMMENTS	
2	03/28/12	UPDATE TO 2010 FBC	

MCY ENGINEERING, INC.
GLAZING CONSULTANTS
8501 SW 124 AVE. STE 205A
MIAMI, FL 33183
P: 305.271.0117
F: 786.573.5063
www.MCYEngineering.com
MCY.Engineering@Att.net

SYSTEM 2 ALUMINUM ACCORDION SHUTTER
HURRICANE PROTECTION MANUFACTURING ASSOCIATION
600 W. 83RD ST.
HIALEAH, FL. 33014
Tel: (786) 245-6777 Fax: (305) 817-9818

DATE	5-13-10
SCALE	
DRAWN	E. D.
PROJECT	10-04

DRAWING NO.
AD10-12

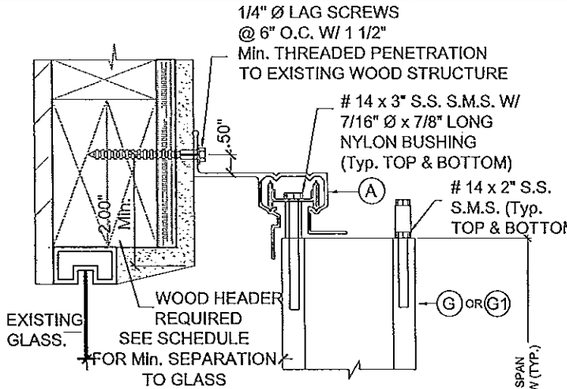

ALTERNATIVE 1

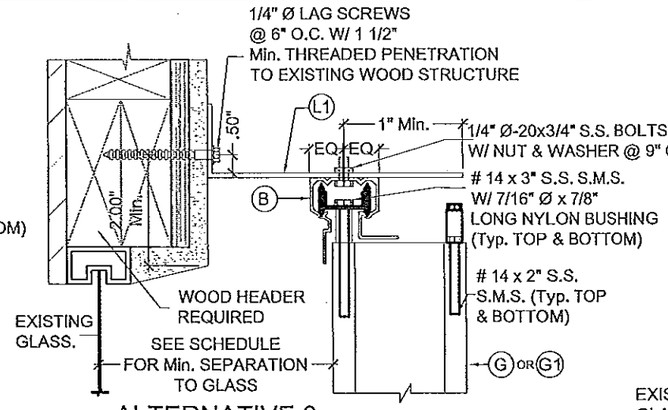

ALTERNATIVE 3

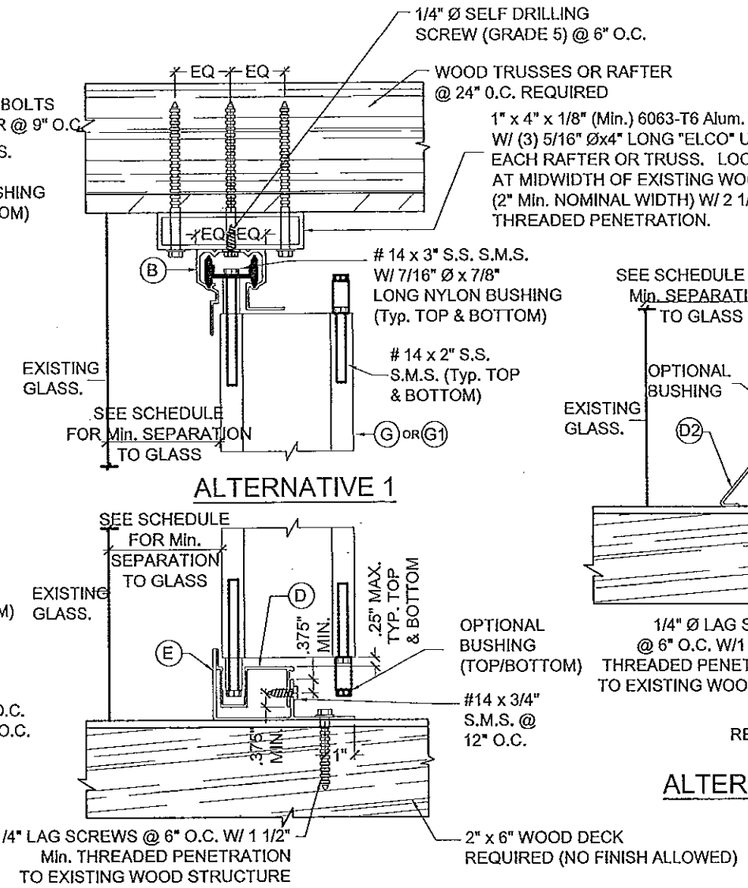

ALTERNATIVE 1

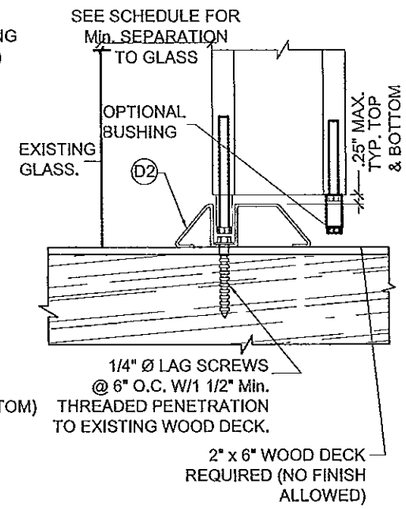

ALTERNATIVE 3

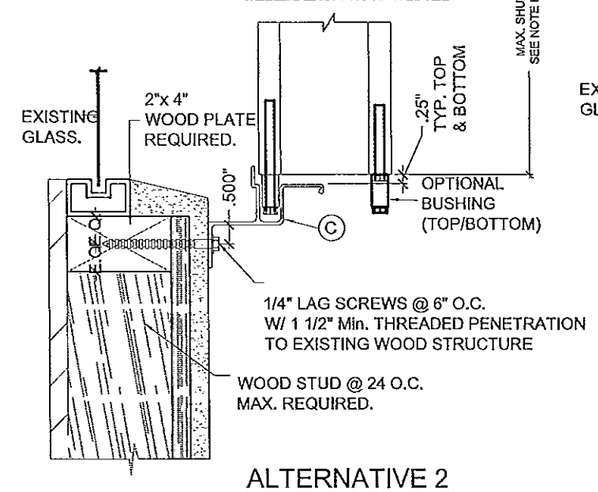

ALTERNATIVE 2

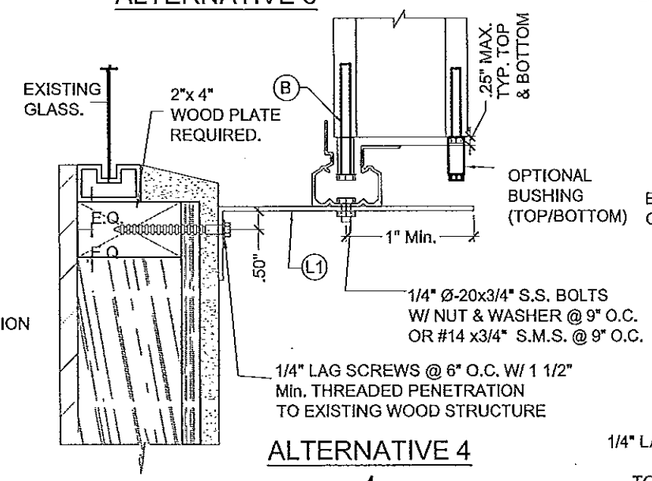

ALTERNATIVE 4

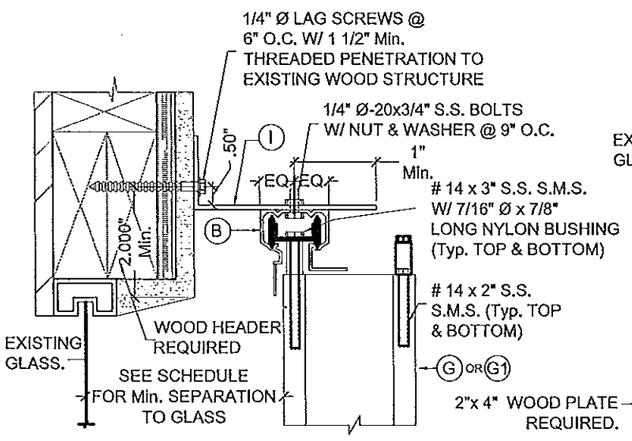

ALTERNATIVE 5

WALL MOUNTING INSTALLATION (OFFSET)

SECTIONS A

SCALE: 1/4"=1"

INSTALLATION DETAILS ON EXISTING WOOD BUILDINGS

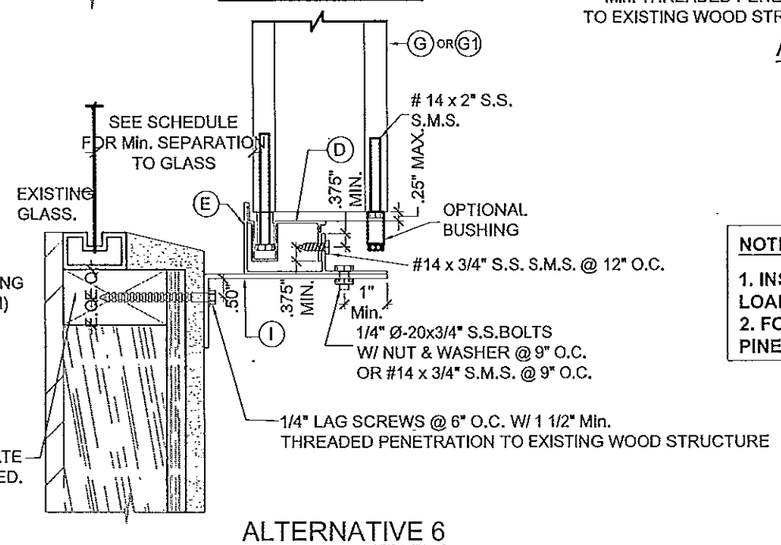

ALTERNATIVE 6

WALL MOUNTING INSTALLATION (OFFSET)

SECTIONS B

SCALE: 1/4"=1"

NOTE:
WALL/FLOOR/CEILING MOUNTING SECTIONS CAN BE COMBINED IN ANY WAY TO SUIT ANY INSTALLATION.

NOTES:

1. INSTALLATIONS ARE ONLY VALID FOR INSTALLATIONS WITH DESIGN WIND LOADS LESS THAN OR EQUAL TO 75 p.s.f. AND 9'-0" Max. SHUTTER SPAN.
2. FOR NEW WOOD FRAME CONSTRUCTION: WOOD MEMBERS TO BE SOUTHERN PINE No. 2, W/ SPECIFIC DENSITY OF 0.55 OR EQUAL.

PRODUCT REVISED
as complying with the Florida
Building Code
Acceptance No 13-0326.15
Expiration Date 02/10/2015
By
Miami Dade Product Control

MIAMI DADE COUNTY

YIPING WANG
YIPING WANG, P.E.
FLORIDA REGISTRATION
PE #56983
N.C.A.R. 28677
STATE OF FLORIDA
PROFESSIONAL ENGINEER

MAR 24 2012

REVISIONS		
NO.	DATE	DESCRIPTION
1	09/25/10	AS PER BCCO COMMENTS
2	03/25/12	UPDATE TO 2010 FBC

MCY ENGINEERING, INC.
GLAZING CONSULTANTS
8501 SW 124 AVE. STE 205A MIAMI, FL 33183
P: 305.271.0117
F: 786.573.5063
www.MCYEngineering.com
MCY.Engineering@Att.net

SYSTEM 2 ALUMINUM ACCORDION SHUTTER
HURRICANE PROTECTION MANUFACTURING ASSOCIATION
600 W. 83RD ST.
HIALEAH, FL. 33014
Tel: (786) 245 - 6777 Fax: (305) 817 - 9818

DATE	5-13-10
SCALE	
DRAWN	E. D.
PROJECT	10-04

DRAWING NO.
AD10-12

10 OF 10