MIAMI-DADE COUNTY
DEPARTMENT OF REGULATORY AND ECONOMIC RESOURCES (RER)
BOARD AND CODE ADMINISTRATION DIVISION

MIAMI-DADE COUNTY
PRODUCT CONTROL SECTION
11805 SW 26 Street, Room 208
T (786) 315-2590 F (786) 315-2599
www.miamidade.gov/economy

NOTICE OF ACCEPTANCE (NOA)

R. C. Aluminum Industries, Inc.
2805 NW 75 Avenue
Miami, FL 33122

SCOPE:

This NOA is being issued under the applicable rules and regulations governing the use of construction materials. The documentation submitted has been reviewed and accepted by Miami-Dade County RER - Product Control Section to be used in Miami Dade County and other areas where allowed by the Authority Having Jurisdiction (AHJ).

This NOA shall not be valid after the expiration date stated below. The Miami-Dade County Product Control Section (In Miami Dade County) and/or the AHJ (in areas other than Miami Dade County) reserve the right to have this product or material tested for quality assurance purposes. If this product or material fails to perform in the accepted manner, the manufacturer will incur the expense of such testing and the AHJ may immediately revoke, modify, or suspend the use of such product or material within their jurisdiction. RER reserves the right to revoke this acceptance, if it is determined by Miami-Dade County Product Control Section that this product or material fails to meet the requirements of the applicable building code.

This product is approved as described herein, and has been designed to comply with the Florida Building Code, including the High Velocity Hurricane Zone.

DESCRIPTION: Series "PH 3050" Aluminum Project–Out/In Window – L.M.I.

APPROVAL DOCUMENT: Drawing No. **W09–22**, titled "PH3050 Alum. Project Out/In Wdw. (L.M.I.)", sheets 1 through 10 of 10, dated 04/04/09, with revision A dated 03/20/13, prepared by Al–Farooq Corporation, signed and sealed by Javad Ahmad, P.E., bearing the Miami–Dade County Product Control Revision stamp with the Notice of Acceptance number and expiration date by the Miami–Dade County Product Control Section.

MISSILE IMPACT RATING: Large and Small Missile Impact Resistant

LABELING: Each unit shall bear a permanent label with the manufacturer's name or logo, city, state, model/series, and following statement: "Miami-Dade County Product Control Approved", unless otherwise noted herein.

RENEWAL of this NOA shall be considered after a renewal application has been filed and there has been no change in the applicable building code negatively affecting the performance of this product.

TERMINATION of this NOA will occur after the expiration date or if there has been a revision or change in the materials, use, and/or manufacture of the product or process. Misuse of this NOA as an endorsement of any product, for sales, advertising or any other purposes shall automatically terminate this NOA. Failure to comply with any section of this NOA shall be cause for termination and removal of NOA.

ADVERTISEMENT: The NOA number preceded by the words Miami-Dade County, Florida, and followed by the expiration date may be displayed in advertising literature. If any portion of the NOA is displayed, then it shall be done in its entirety.

INSPECTION: A copy of this entire NOA shall be provided to the user by the manufacturer or its distributors and shall be available for inspection at the job site at the request of the Building Official.

This NOA **revises NOA# 09-1203.01** and consists of this page 1 and evidence pages E-1 and E-2, as well as approval document mentioned above.

The submitted documentation was reviewed by **Manuel Perez, P.E.**

MIAMI-DADE COUNTY APPROVED

5/8/13

R. C. Aluminum Industries, Inc.

NOTICE OF ACCEPTANCE: EVIDENCE SUBMITTED

A. DRAWINGS

1. Manufacturer's die drawings and sections.
2. Drawing No **W09–22**, titled "PH3050 Alum. Project Out/In Wdw. (L.M.I.)", sheets 1 through 10 of 10, dated 04/04/09, with revision A dated 03/20/13, prepared by Al–Farooq Corporation, signed and sealed by Javad Ahmad, P.E.

B. TESTS

1. Test reports on: 1) Air Infiltration Test, per FBC, TAS 202–94
   2) Uniform Static Air Pressure Test, Loading per FBC TAS 202–94
   3) Water Resistance Test, per FBC, TAS 202–94
   4) Large Missile Impact Test per FBC, TAS 201–94
   5) Cyclic Wind Pressure Loading per FBC, TAS 203–94
   6) Forced Entry Test, per FBC 2411 3.2.1, TAS 202–94
   7) Impact Test per FBC, ANSI Z97.1–04/ 16 CFR 1201,
   8) Drop Test per FBC, ANSI Z97.1–04,

   along with marked–up drawings and installation diagram of a series PH 3050 aluminum projected window, prepared by Fenestration Testing Laboratory, Inc., Test Report No. **FTL 5587**, dated 06/06/09, signed and sealed by Michael R. Wenzel, P.E. ***(Submitted under previous NOA#09-1203.01)***

C. CALCULATIONS

1. Anchor calculations and structural analysis, complying with FBC–2007, prepared by Al–Farooq Corporation, dated 07/23/09, signed and sealed by Arshad Viqar, P. E. ***(Submitted under previous NOA#09-1203.01)***
2. Glazing complies with ASTM E1300-04

D. QUALITY ASSURANCE

1. Miami-Dade Department of Regulatory and Economic Resources (RER)

E. MATERIAL CERTIFICATIONS

1. Notice of Acceptance No. **11–0624.02** issued to **E.I. DuPont DeNemours & Co.**, Inc. for their "**DuPont SentryGlas® Interlayer**" dated 08/25/11, expiring on 01/14/17.

Manuel Perez, P.E.
Product Control Examiner
NOA No. 13-0328.12
Expiration Date: March 24, 2015
Approval Date: May 16, 2013

NOTICE OF ACCEPTANCE: EVIDENCE SUBMITTED

F. STATEMENTS

1. Statement letter of conformance, complying with FBC-2010, and of no financial interest, dated March 20, 2013, signed and sealed by Javad Ahmad, P.E.
2. Laboratory compliance letter for Test Report No. **FTL 5587**, issued by Fenestration Testing Laboratory, Inc., dated June 06, 2009, signed and sealed by Michael R. Wenzel, P. E.
   (Submitted under previous NOA#09-1203.01)

G. OTHER

1. Notice of Acceptance No. **09-1203.01**, issued to R. C. Aluminum Industries, Inc. for their Series "PH 3050" Aluminum Project-Out/In Window System – L.M.I.", approved on 03/24/10 and expiring on 03/24/15.

Manuel Perez, P.E.
Product Control Examiner
NOA No. 13-0328.12
Expiration Date: March 24, 2015
Approval Date: May 16, 2013

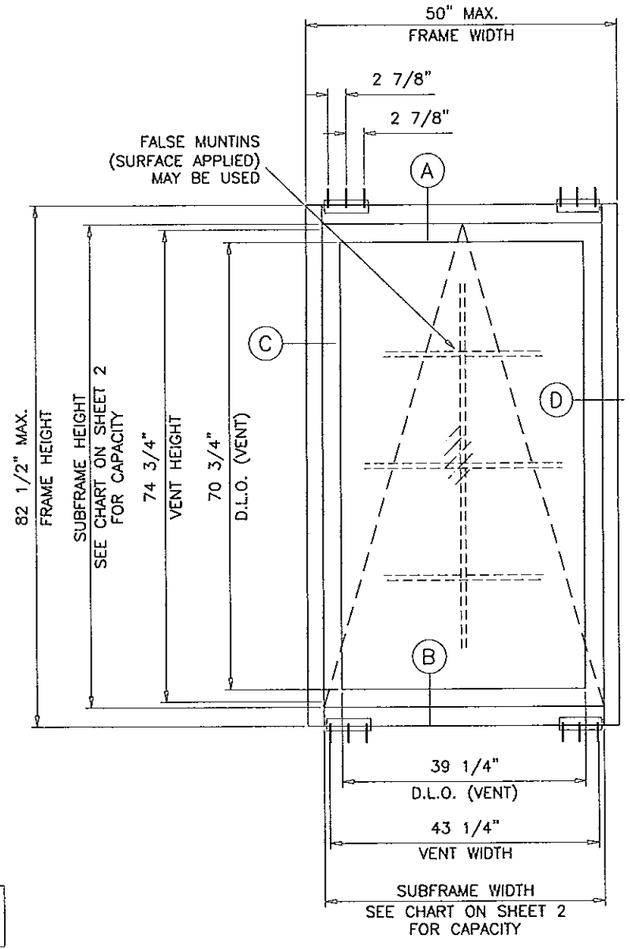

TYPICAL ELEVATION

PROJECT OUT

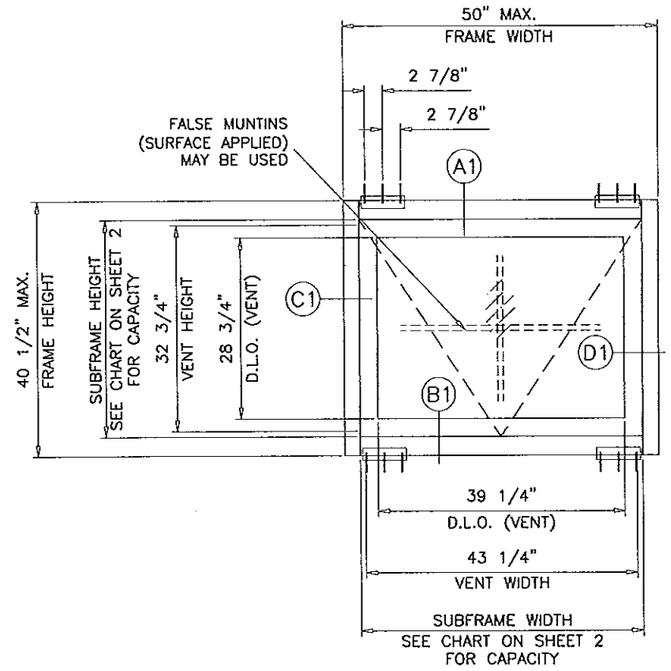

TYPICAL ELEVATION

PROJECT IN

THESE WINDOWS ARE RATED FOR LARGE & SMALL MISSILE IMPACT.
SHUTTERS ARE NOT REQUIRED.

SERIES PH3050
ALUMINUM PROJECT OUT/IN WINDOW

APPROVAL APPLIES TO SINGLE UNITS OR SIDE BY SIDE COMBINATIONS OF PROJECTED WINDOWS IN MODULES OF TWO OR MORE WINDOWS FOR WINDOWS CAPACITY SEE CHARTS ON SHEET 2.
ALSO PROJECTED WINDOWS WITHIN PH3050 WINDOW WALL SYSTEM SEE SEPARATE NOA FOR PH3050 WINDOW WALL MULLION, GLASS AND ANCHOR CAPACITIES.
LOWER DESIGN PRESSURES FROM WINDOW CAPACITY CHARTS OR WINDOW WALL NOA WILL APPLY TO ENTIRE SYSTEM.

THIS PRODUCT HAS BEEN DESIGNED AND TESTED TO COMPLY WITH THE REQUIREMENTS OF THE FLORIDA BUILDING CODE INCLUDING HIGH VELOCITY HURRICANE ZONE (HVHZ).

ANCHORS SHALL BE AS LISTED, SPACED AS SHOWN ON DETAILS, ANCHORS EMBEDMENT TO BASE MATERIAL SHALL BE BEYOND WALL DRESSING OR STUCCO.

ANCHORING OR LOADING CONDITIONS NOT SHOWN IN THESE DETAILS ARE NOT PART OF THIS APPROVAL.

MATERIALS INCLUDING BUT NOT LIMITED TO STEEL/METAL SCREWS, THAT COME INTO CONTACT WITH OTHER DISSIMILAR MATERIALS SHALL MEET THE REQUIREMENTS OF THE FLORIDA BLDG. CODE SECTION 2003.8.4.

PRODUCT COMPLIES WITH REQUIREMENTS OF ANSI Z97.1.
SAFEGUARD REQUIREMENTS TO BE VERIFIED.

INSUL. LAM. GLASS
LARGE MISSILE IMPACT

Engr: JAVAD AHMAD
CIVIL
FLA. PE # 70592
C.A.N. 3538

MAR 21 2013

PRODUCT REVISED
as complying with the Florida
Building Code
Acceptance No 13-0328.12
Expiration Date March 24, 2015
By Manuel Saez
Miami-Dade Product Control

AL-FAROOQ CORPORATION
ENGINEERS & PRODUCT DEVELOPMENT
1235 S.W. 87 AVE
MIAMI, FLORIDA 33174
TEL. (305) 264-8100 FAX. (305) 262-6978
COMP-ANL\W09-22RC

PH3050 ALUM PROJECT OUT/IN WDW. (L.M.I.)

R.C. ALUMINUM INDUSTRIES INC.
2805 N.W. 75 TH AVE.
MIAMI, FL. 33122
TEL. (305) 592-1515 FAX. (305) 592-2184

revisions:

no	date	by	description
A	03.20.13		UPDATED TO 2010 FBC

date: 04-04-09
scale: 1/2"=1'-0"
dr. by: HAMID
chk. by:

drawing no.
W09-22

PROJECT OUT WINDOW			
WINDOW DIMS.		DESIGN LOAD CAPACITY - PSF	
SUBFRAME WIDTH	SUBFRAME HEIGHT	EXT.(+)	INT.(-)
24"	24"	120.0	120.0
30"		120.0	120.0
36"		120.0	120.0
42"		120.0	120.0
45"		120.0	120.0
48"		120.0	120.0
54"		90.1	90.1
60"		64.7	64.7
66"		48.0	48.0
72"		36.7	36.7
24"	30"	120.0	120.0
30"		120.0	120.0
36"		120.0	120.0
42"		120.0	120.0
45"		120.0	120.0
48"		111.7	111.7
54"		75.7	75.7
60"		53.8	53.8
66"		39.6	39.6
72"		30.1	30.1
24"	36"	120.0	120.0
30"		120.0	120.0
36"		120.0	120.0
42"		120.0	120.0
45"		120.0	120.0
48"		100.6	100.6
54"		67.0	67.0
60"		47.0	47.0
66"		34.4	34.4
72"		25.9	25.9
24"	42"	120.0	120.0
30"		120.0	120.0
36"		120.0	120.0
42"		120.0	120.0
45"		120.0	120.0
48"		94.7	94.7
54"		61.7	61.7
60"		42.7	42.7
66"		30.9	30.9
72"		23.1	23.1
24"	48"	120.0	120.0
30"		120.0	120.0
36"		120.0	120.0
42"		120.0	120.0
45"		120.0	120.0
48"		92.7	92.7
54"		58.9	58.9
60"		40.0	40.0
66"		28.6	28.6
72"		21.2	21.2

PROJECT OUT WINDOW			
WINDOW DIMS.		DESIGN LOAD CAPACITY - PSF	
SUBFRAME WIDTH	SUBFRAME HEIGHT	EXT.(+)	INT.(-)
24"	54"	120.0	120.0
30"		120.0	120.0
36"		120.0	120.0
42"		120.0	120.0
45"		120.0	120.0
48"		92.7	92.7
54"		57.9	57.9
60"		38.5	38.5
24"	60"	120.0	120.0
30"		120.0	120.0
36"		120.0	120.0
42"		120.0	120.0
45"		120.0	120.0
48"		92.7	92.7
54"		57.9	57.9
24"	66"	120.0	120.0
30"		120.0	120.0
36"		120.0	120.0
42"		120.0	120.0
45"		120.0	120.0
48"		92.7	92.7
24"	72"	120.0	120.0
30"		120.0	120.0
36"		120.0	120.0
42"		120.0	120.0
45"		120.0	120.0
48"		92.7	92.7
24"	76-1/2"	120.0	120.0
30"		120.0	120.0
36"		120.0	120.0
42"		120.0	120.0
45"		116.5	116.5

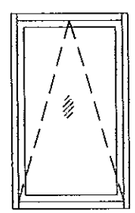

FRAME WIDTH = SUBFRAME WIDTH + 6"
FRAME HEIGHT = SUBFRAME HEIGHT + 6"

PROJECT IN WINDOW			
WINDOW DIMS.		DESIGN LOAD CAPACITY - PSF	
SUBFRAME WIDTH	SUBFRAME HEIGHT	EXT.(+)	INT.(-)
24"	34-1/2"	120.0	120.0
30"		120.0	120.0
36"		120.0	120.0
42"		120.0	120.0
45"		120.0	120.0

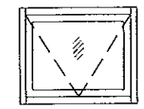

NOTE:
GLASS CAPACITIES ON THIS SHEET ARE BASED ON ASTM E1300-04 (3 SEC. GUSTS) AND FLORIDA BUILDING COMMISSION DECLARATORY STATEMENT DCA05-DEC-219

Engr: JAVAD AHMAD
CIVIL
FLA. PE # 70592
C.A.N. 3538

MAR 21 2013

PRODUCT REVISED
as complying with the Florida Building Code
Acceptance No 13-0328.12
Expiration Date March 24, 2015
By Maurel Perez
Miami Dade Product Control

AL-FAROOQ CORPORATION
ENGINEERS & PRODUCT DEVELOPMENT
1235 S.W. 87 AVE
MIAMI, FLORIDA 33174
TEL (305) 264-8100 FAX. (305) 262-6978

COMP-ANL\W09-22RC

PH3050 ALUM PROJECT OUT/IN WDW. (L.M.I.)

R.C. ALUMINUM INDUSTRIES INC.
2805 N.W. 75 TH AVE.
MIAMI, FL. 33122
TEL. (305) 592-1515 FAX. (305) 592-2184

revisions:

no	date	by	description
A	03.20.13		NO CHANGE THIS SHEET

date: 04-04-09
scale: -
dr. by: HAMID
chk. by:

drowing no.
W09-22

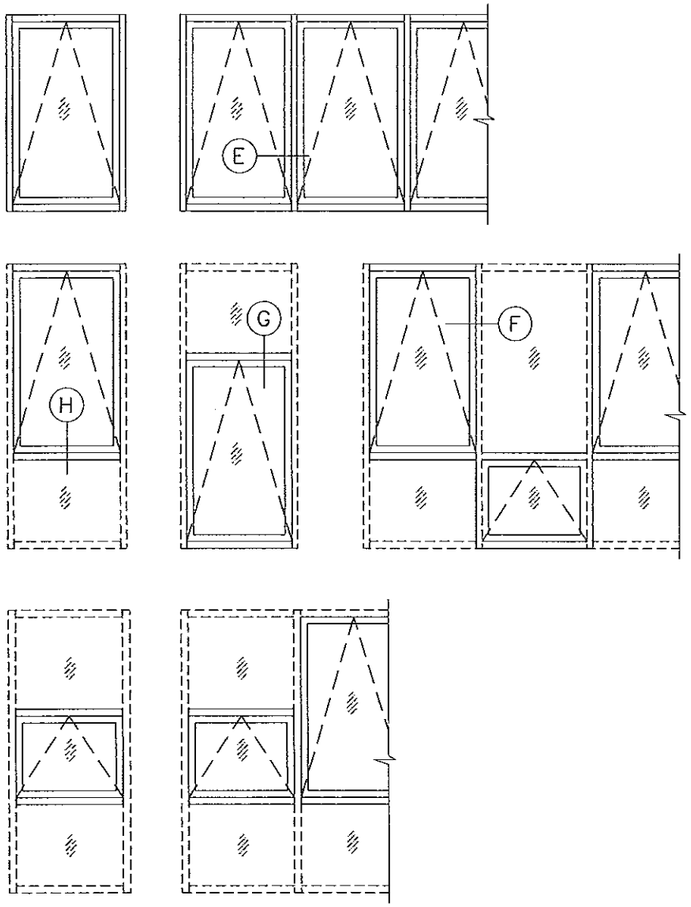

APPROVED CONFIGURATIONS
PROJECT OUT

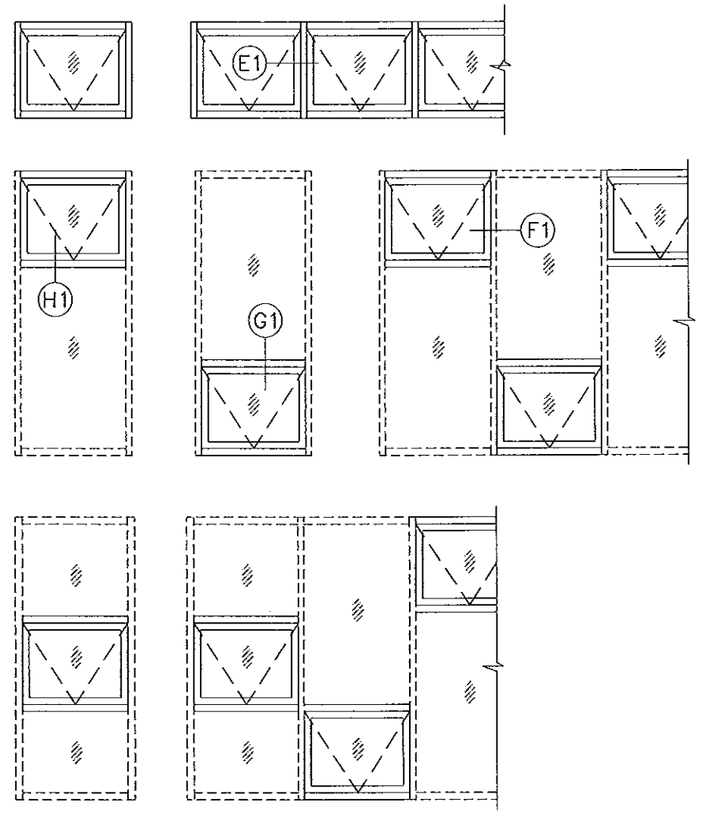

APPROVED CONFIGURATIONS
PROJECT IN

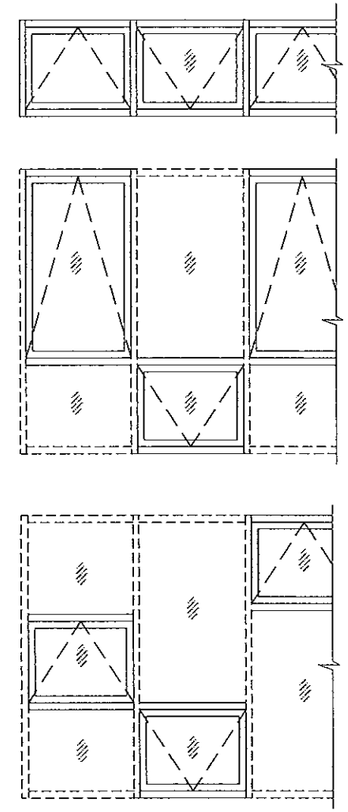

APPROVED CONFIGURATIONS
ANY COMBINATIONS OF PROJECT OUT AND PROJECT IN

SEE SEPARATE NOA FOR PH3050 WINDOW WALL SYSTEM DESIGN LOADS AND ANCHORS.

LOWER VALUES FROM PROJECTED WINDOW CAPACITY CHART OR WINDOW WALL SYSTEM NOA WILL APPLY TO ENTIRE SYSTEM.

Engr: JAVAD AHMAD
CIVIL
FLA. PE # 70592
C.A.N. 3538

MAR 21 2013

PRODUCT REVISED
as complying with the Florida Building Code
Acceptance No 13-0328.12
Expiration Date March 24, 2015
By Manuel Diaz
Miami Dade Product Control

AL-FAROOQ CORPORATION
ENGINEERS & PRODUCT DEVELOPMENT
1235 S.W. 87 AVE
MIAMI, FLORIDA 33174
TEL. (305) 264-8100 FAX. (305) 262-6978
COMP-ANL\W09-22RC

PH3050 ALUM PROJECT OUT/IN WDW. (L.M.I.)

R.C. ALUMINUM INDUSTRIES INC.
2805 N.W. 75 TH AVE.
MIAMI, FL. 33122
TEL. (305) 592-1515 FAX. (305) 592-2184

revisions:

no	date	by	description
A	03.20.13		NO CHANGE THIS SHEET

date: 04-04-09
scale: –
dr. by: HAMID
chk. by:

drawing no.
W09-22

ITEM NO.	PART NUMBER	DESCRIPTION	MATERIAL	MANF./SUPPLIER/REMARKS
E1	PH3050-017	CLOSED JAMB	6063-T6	-
E2	PH3050-004	HEAD, SILL & INTERMIDIATE HORIZONTAL	6063-T6	-
E3	PH3050-005	HORIZONTAL GLAZING COVER HEAD & SILL	6063-T6	-
E4	PH3050-006	HORIZONTAL GLAZING COVER INTERMIDIATE	6063-T6	-
E5	PH3050-007	INTERIOR HORIZONTAL COVER	6063-T6	-
E6	PH3050-008	ANCHOR HEAD & SILL	6005-T5	-
E7	PH3050-009	HORIZONTAL GLAZING COVER HEAD & SILL (VENT)	6063-T6	-
E8	PH3050-010	HORIZONTAL COVER INTERMIDIATE, HEAD & SILL (VENT)	6063-T6	-
E9	PH3050-011	VENT FRAME SILL	6063-T6	-
E10	PH3050-012	VENT FRAME HEAD & JAMBS	6063-T6	-
E11	PH3050-013	VENT	6063-T6	-
E12	PH3050-014	HORIZONTAL GLAZING COVER INTERMIDIATE (VENT)	6063-T6	-
E13	PH3050-015	MALE MULLION	6005-T5	-
E14	PH3050-016	FEMALE MULLION	6005-T5	-
E15	FX345-007	INTERIOR COVER	-	-
E16	500Y-007	GLAZIND BEAD	-	-
			-	-
V1	V-003	MARINE GLAZING	VINYL	DUROMETER 60 SHORE 'A'
V3	V-013	VENT WSTP.	SPONGE NEOPRENE	-
V4	V-032	BULB GASKET	VINYL	DUROMETER 65 SHORE 'A'
V5	V-033A	MOLDED COMPRESSION GASKET	SPONGE NEOPRENE	-
V6	V-047	BULB GASKET	VINYL	DUROMETER 60 ±5
V8		ø 0.187 SPLINE	-	-
V11	V-038	OFFSET GASKET	VINYL	DUROMETER 70 ±5 SHORE 'A'
			-	-
S1		#14 X 1 1/4" LG.PH.PHL.SMS.POINT"B".ST/ST (ASSEMBLY)	-	-
S2		1/4-20 X 1 1/2" LG. HEXHEAD FULL THREAD(LEVELING SCREW)	-	-
-		-	-	-
S4		#12-24 X 1/2" LG. FH MS	-	-
S5		#12 X 1/2" LG. ROUNDHEAD SMS. POINT "B" ST/ST (VENT)	-	-
S6		#10 X 3/8" LG. FH. SMS. ST/ST(HANDLE & KEEPER)	-	-
S7		#10 X 1/2" PH. SMS. POINT"B" ST/ST(HINGE SCREW)	-	-
S8		#6 X 1/2" LG. PH. SMS. ST/ST(ALUM. SNUBBER)	-	-
S9		#14 X 3/4" FH. SMS. ST/ST	-	-
			-	-
H1	851-116-8046	26" PROJECTED HINGE	-	-
H2	851-112-8046	16" PROJECTED HINGE	-	-
H3	162-201	RIGHT HAND HANDLE	-	AT 8" FROM END
H4	162-202	LEFT HAND HANDLE	-	AT 8" FROM END
H5	208-043	KEEPER	-	AT LOCK LOCATIONS
H6		3" X 3" X 1/4"-1.720" LG. ALUM ANGLE	6063-T6	-
H7		3" X 3" X 1/4"-1.125" LG. ALUM ANGLE	6063-T6	-
H8	316	30" GH VENT. P.I & P.O	-	-
H9	328SG	72" GH VENT. P.O	-	-
H10	716-10-8	KEYED LIMITED DEVICE	-	-
			-	-
M1		1/8" X 1" X 4" LG. SETTING BLOCK	NEOPRENE	-
M2		1/4" X 1" X 4" LG. SETTING BLOCK	NEOPRENE	-
M3		3/4" X 3/4" X 4" LG. SETTING BLOCK	NEOPRENE	-
M4		1/8" X 1/2" SINGLE FACE TAPE V2100	-	-
M5		7/8" X 7/8" X 4" LG. SETTING BLOCK	NEOPRENE	-
M7	HC200-M07	SNUBBER	ALUMINUM	-
M8	P#12206	SNUBBER	NYLON	-
M9		1/2" X 3/4" WEEP ROD	-	-
M10		STRUCTURAL SILICONE BLACK	-	-
M11		3/8" X 3/16" DOUBLE FACE TAPE V2100	-	-
M12		1" X 1" X 1" LG. SETTING BLOCK	-	-
M13		5/16" X 5/16" SINGLE FACE TAPE	-	-
M14		1/4" X 1/4" SHIM	-	-
M15		1/4" X 2 3/4" ALUM. PLATE	6063-T6	-

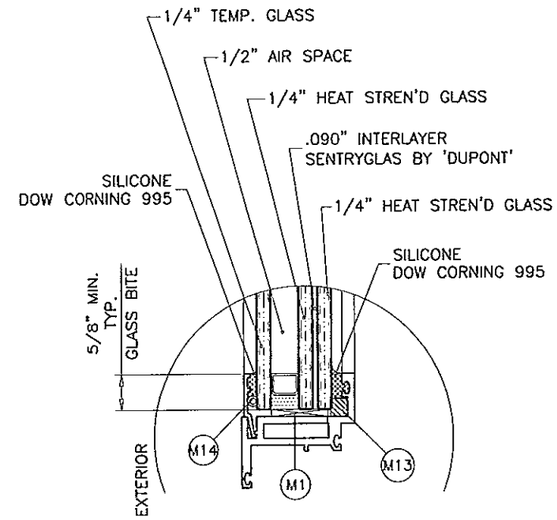

PROJECT OUT

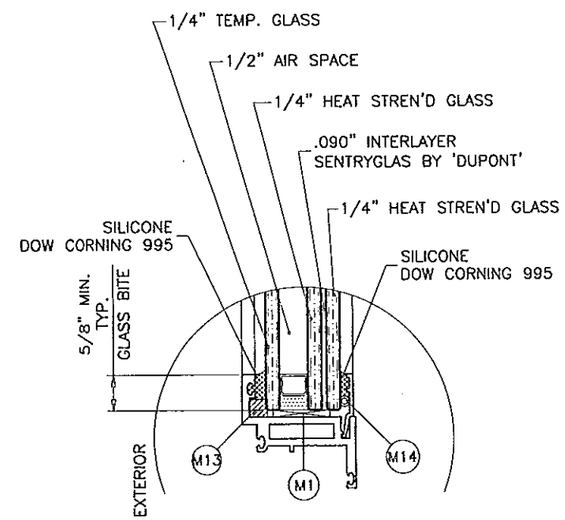

PROJECT IN

GLAZING DETAILS

1-5/16" OVERALL INSUL. LAM. GLASS

Engr: JAVAD AHMADI
CIVIL
FLA. PE # 70592
C.A.N. 3538

MAR 2 1 2013

PRODUCT REVISED
as complying with the Florida
Building Code
Acceptance No 13-0328.12
Expiration Date March 21, 2015
By Manuel Inez
Miami Dade Product Control

AL-FAROOQ CORPORATION
ENGINEERS & PRODUCT DEVELOPMENT
1235 S.W. 87 AVE
MIAMI, FLORIDA 33174
TEL. (305) 264-8100 FAX. (305) 262-6978
COMP-ANL\W09-22RC

PH3050 ALUM PROJECT OUT/IN WDW. (L.M.I.)

R.C. ALUMINUM INDUSTRIES INC.
2805 N.W. 75 TH AVE.
MIAMI, FL. 33122
TEL. (305) 592-1515 FAX. (305) 592-2184

revisions:

no	date	by	description
A	03.20.13		UPDATED TO 2010 FBC

date: 04-04-09
scale: 3/8" = 1"
dr. by: HAMID
chk. by:

drawing no.
W09-22

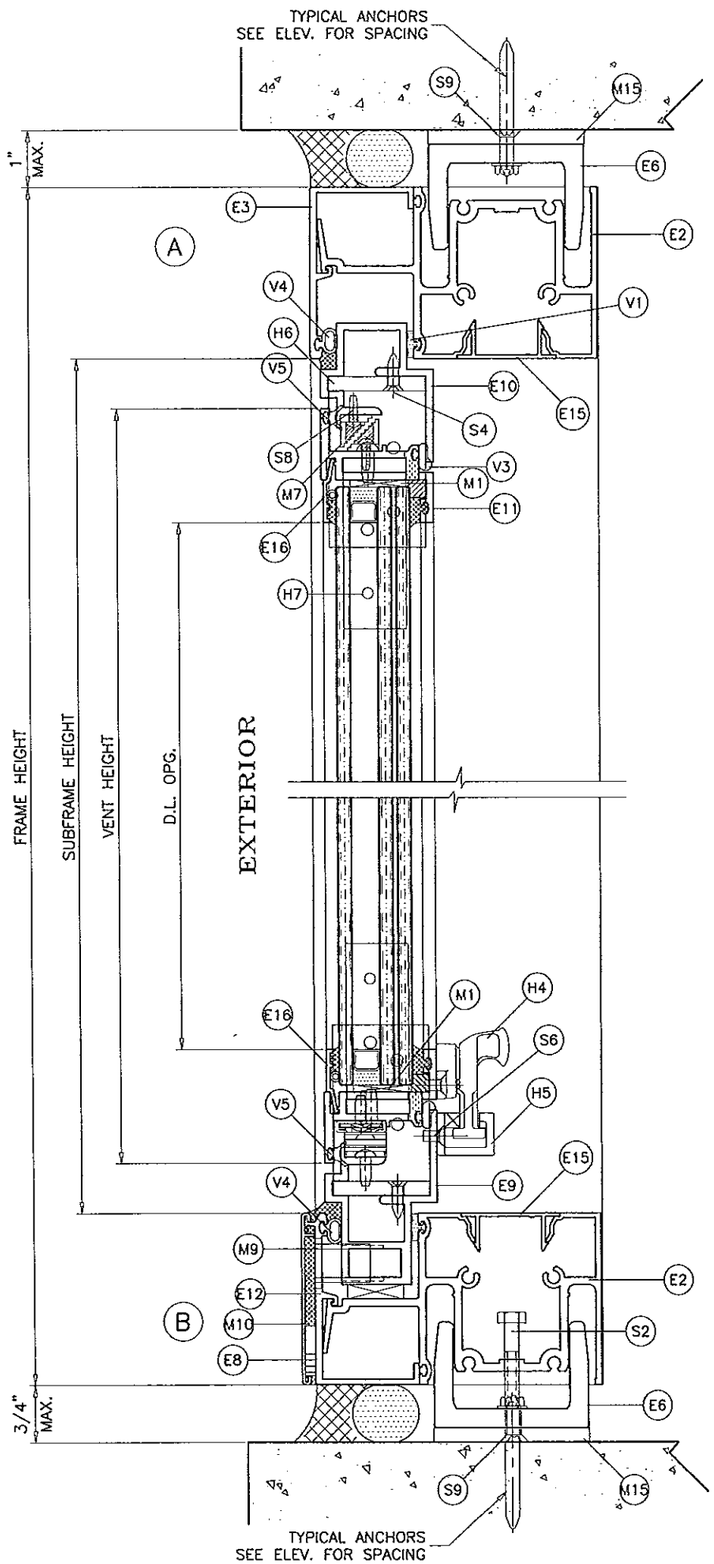

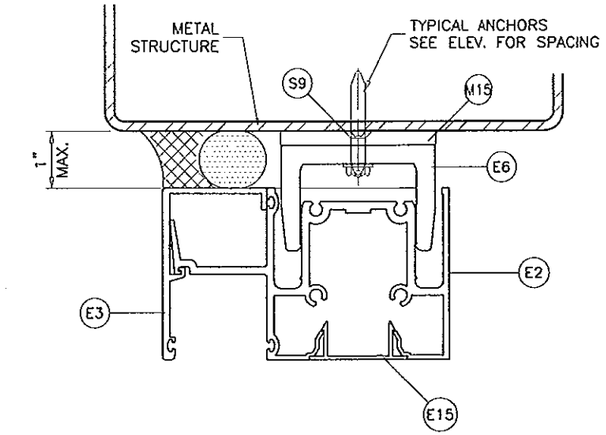

METAL STRUCTURES NOT BY RC ALUMINUM
MUST SUPPORT LOADS IMPOSED BY GLAZING SYSTEM AND TRANSFER THEM TO THE BUILDING STRUCTURE.

TYPICAL ANCHORS: SEE ELEV. FOR SPACING

1/4" HILTI KWIK-CON II (Fu=163 KSI, Fy=157 KSI)

DIRECTLY INTO CONCRETE
1-1/4" MIN. EMBED INTO CONCRETE

1/4" HILTI KWIK-FLEX SELF DRILLING SCREWS (Fu=92 KSI, Fy=120 KSI)
INTO METAL STRUCTURES
STEEL : 1/8" THK. MIN. (Fy = 36 KSI MIN.)
ALUMINUM : 1/8" THK. MIN. (6063-T6 MIN.)
(STEEL IN CONTACT WITH ALUMINUM TO BE PLATED OR PAINTED)

ANCHOR EDGE DISTANCES
INTO CONCRETE = 2-1/2" MIN.
INTO METAL STRUCTURE = 3/4" MIN.

CONCRETE f'c = 3000 PSI MIN.
MASONRY f'm = 1500 PSI MIN.

SEALANTS:
ALL FRAME CORNERS AND MULLION SEAMS SEALED WITH SILICONE.

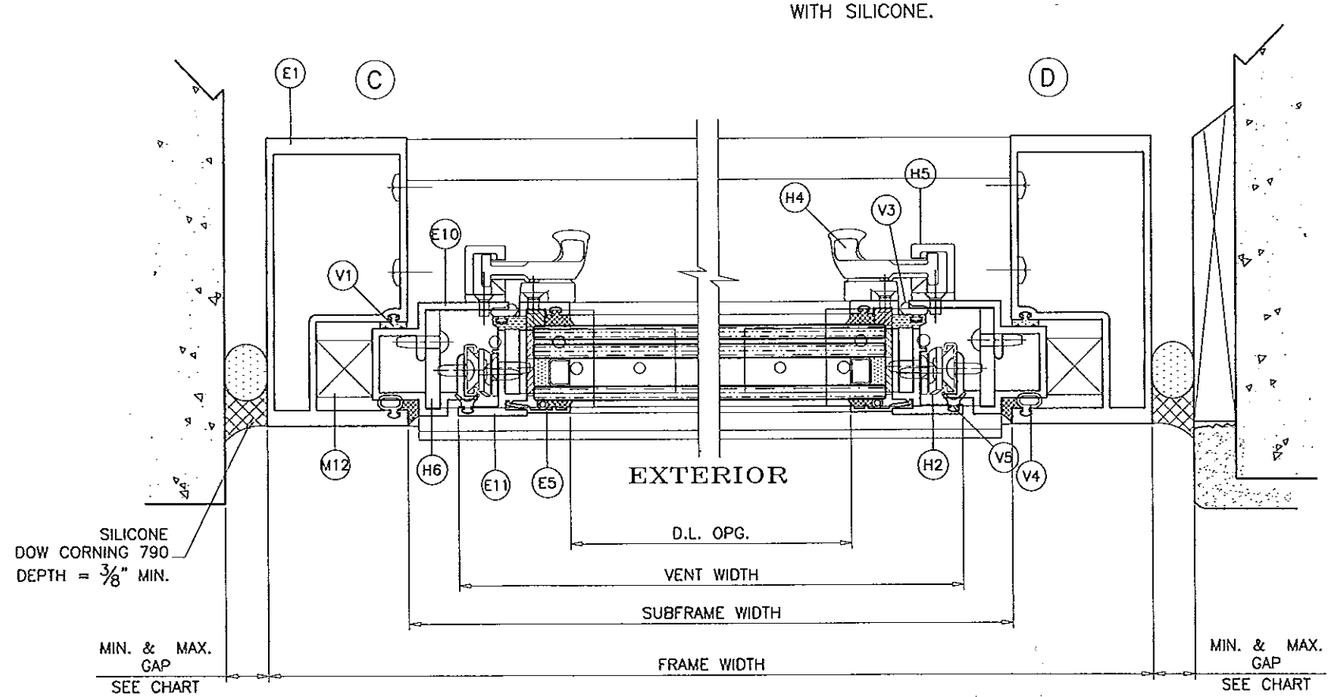

MAX. FRAME HEIGHT	GAP	
	MIN.	MAX.
UPTO 120"	3/8"	3/4"
156"	1/2"	3/4"
174"	5/8"	3/4"

PROJECT OUT WDW.

Engr: JAVAD AHMAD
CIVIL
FLA. PE # 70592
C.A.N. 3538

MAR 2 1 2013

PRODUCT REVISED
as complying with the Florida Building Code
Acceptance No 13-0328.12
Expiration Date March 24, 2015
By Manuel Sira
Miami Dade Product Control

AL-FAROOQ CORPORATION
ENGINEERS & PRODUCT DEVELOPMENT
1235 S.W. 87 AVE
MIAMI, FLORIDA 33174
TEL. (305) 264-8100 FAX. (305) 262-6978
COMP-ANL\W09-22RC

PH3050 ALUM. PROJECT OUT/IN WDW. (L.M.I.)

R.C. ALUMINUM INDUSTRIES INC.
2805 N.W. 75 TH AVE.
MIAMI, FL. 33122
TEL. (305) 592-1515 FAX. (305) 592-2184

revisions:

no	date	by	description
A	03.20.13		NO CHANGE THIS SHEET

date: 04-04-09
scale: 3/8" = 1"
dr. by: HAMID
chk. by:

drowing no. W09-22

sheet 5 of 10

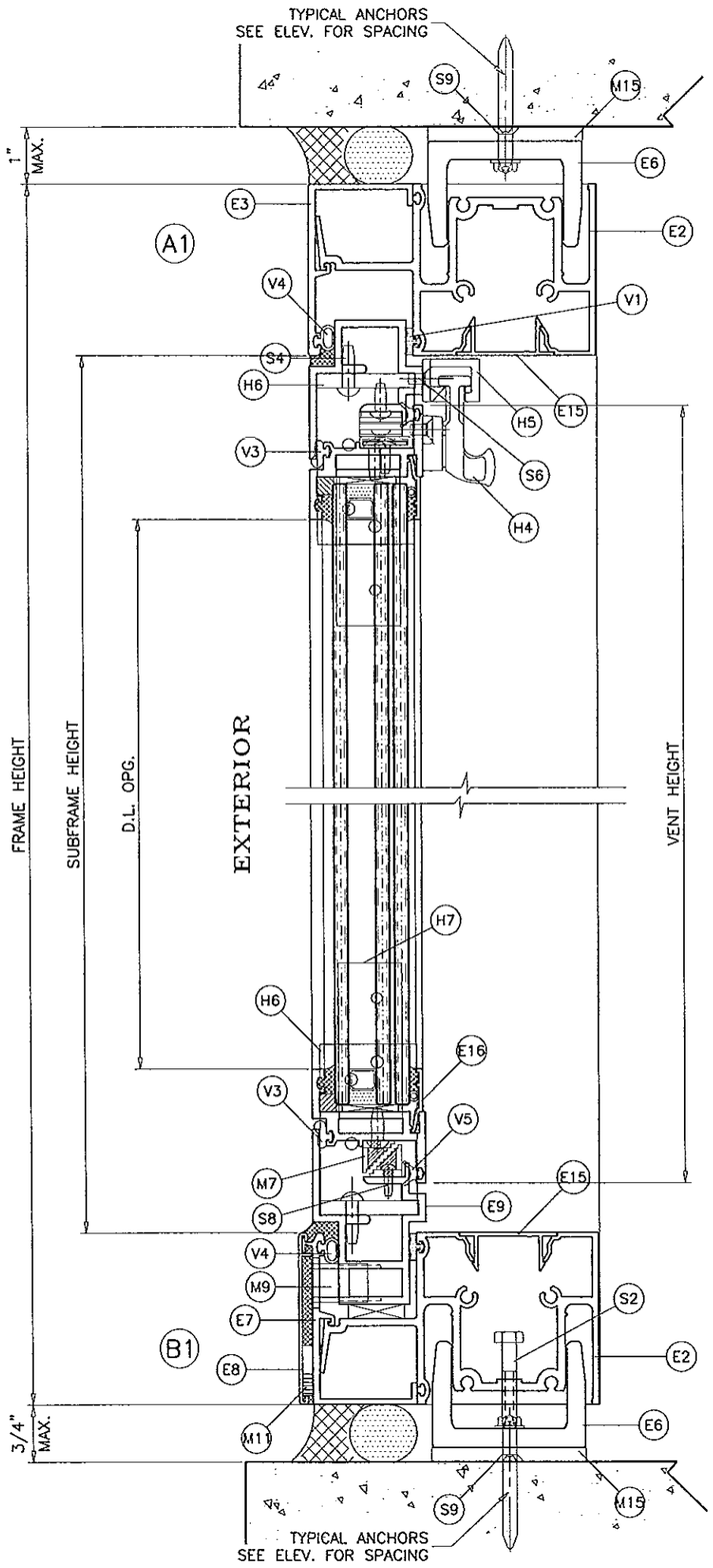

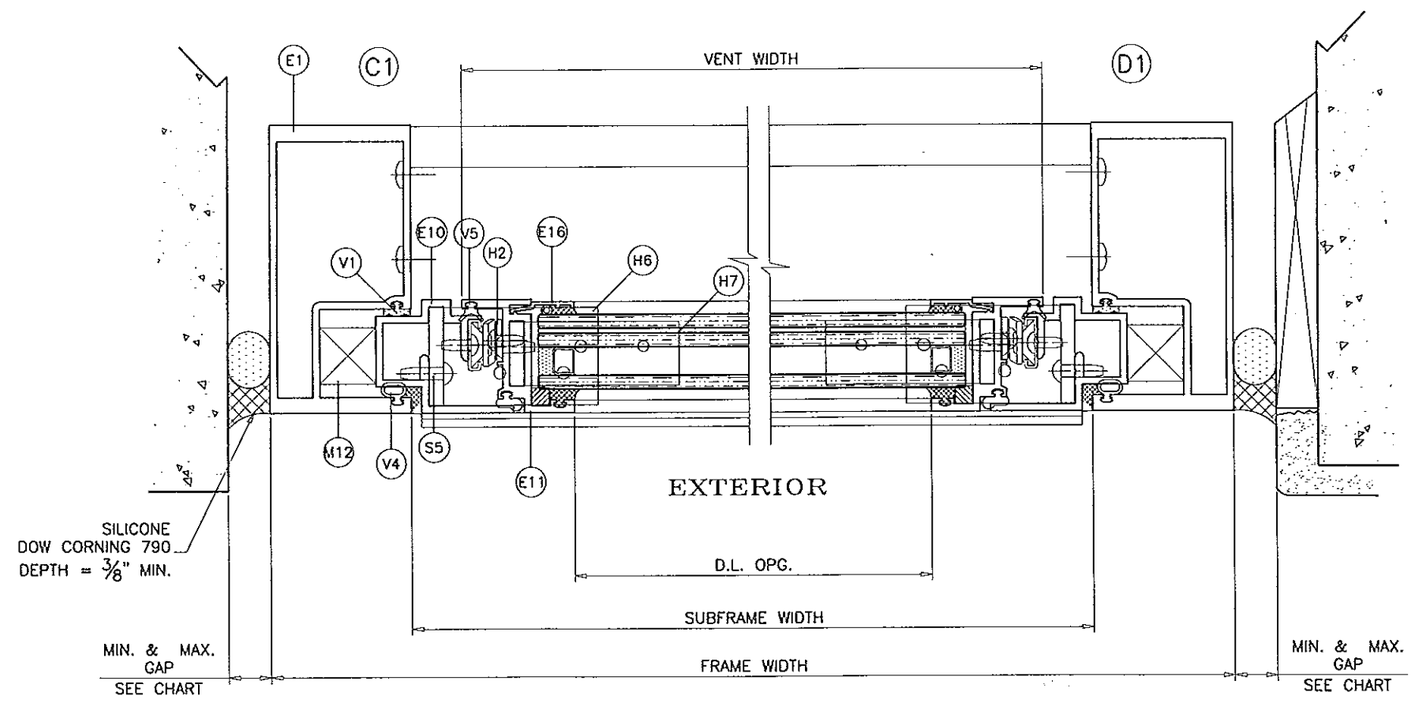

MAX. FRAME HEIGHT	GAP	
	MIN.	MAX.
UPTO 120"	3/8"	3/4"
156"	1/2"	3/4"
174"	5/8"	3/4"

PROJECT IN WDW.

Engr: JAVAD AHMAD
CIVIL
FLA. PE # 70592
C.A.N. 3538

MAR 21 2013

PRODUCT REVISED
as complying with the Florida
Building Code
Acceptance No 13-0328.12
Expiration Date March 24, 2015
By Manuel Cruz
Miami/Dade Product Control

AL-FAROOQ CORPORATION
ENGINEERS & PRODUCT DEVELOPMENT
1235 S.W. 87 AVE
MIAMI, FLORIDA 33174
TEL. (305) 264-3100 FAX. (305) 262-6978

COMP-ANL\W09-22RC

PH3050 ALUM PROJECT OUT/IN WDW. (L.M.I.)

R.C. ALUMINUM INDUSTRIES INC.
2805 N.W. 75 TH AVE.
MIAMI, FL. 33122
TEL. (305) 592-1515 FAX. (305) 592-2184

revisions:

no	date	by	description
A	03.20.13		NO CHANGE THIS SHEET

date: 04-04-09
scale: 3/8" = 1"
dr. by: HAMID
chk. by:

drawing no.
W09-22

sheet 6 of 10

(E) PROJECT OUT

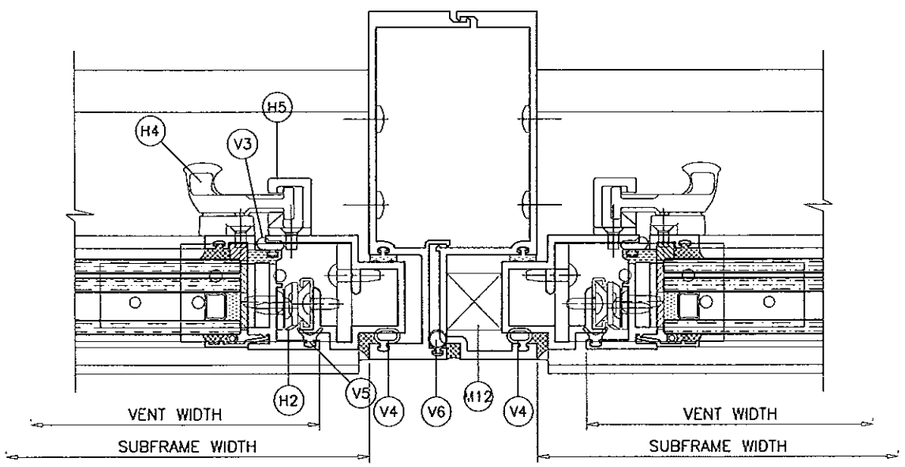

EXTERIOR

(F) PROJECT OUT

PH3050 WINDOW WALL SYSTEM
SEE SEPARATE NOA FOR
DESIGN LOAD RATING AND
MULLION CAPACITIES

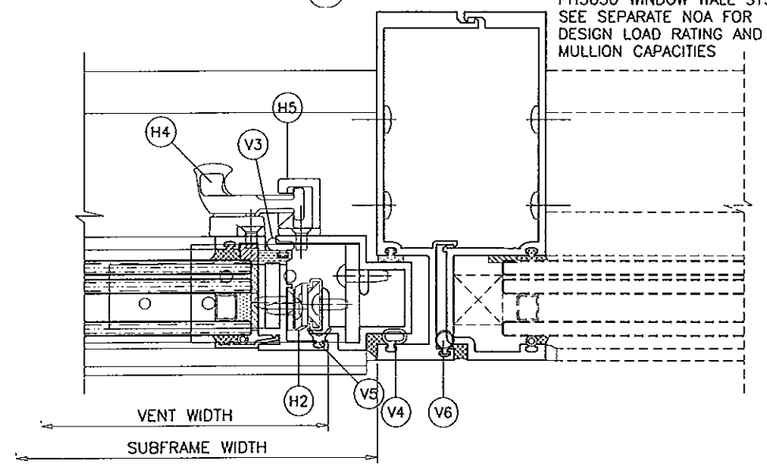

EXTERIOR

(E1) PROJECT IN

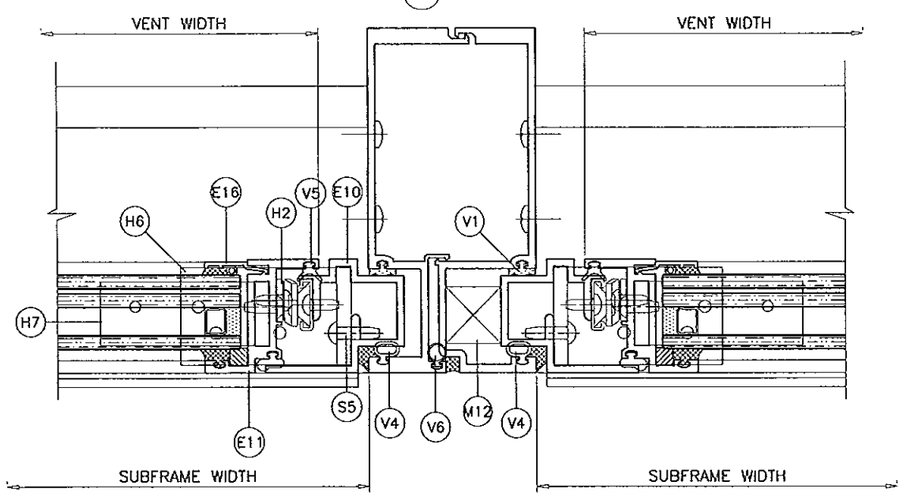

EXTERIOR

(F1) PROJECT IN

PH3050 WINDOW WALL SYSTEM
SEE SEPARATE NOA FOR
DESIGN LOAD RATING AND
MULLION CAPACITIES

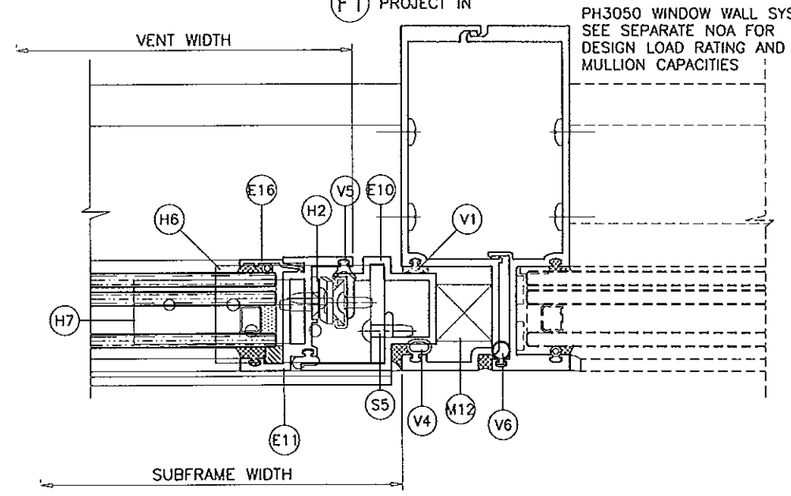

EXTERIOR

Engr: JAVAD AHMAD
CIVIL
FLA. PE # 70592
C.A.N. 3538

MAR 2 1 2013

PRODUCT REVISED
as complying with the Florida
Building Code
Acceptance No 13-0328.12
Expiration Date March 21, 2015
By Manuel Sera
Miami Dade Product Control

AL-FAROOQ CORPORATION
ENGINEERS & PRODUCT DEVELOPMENT
1235 S.W. 87 AVE
MIAMI, FLORIDA 33174
TEL. (305) 264-8100 FAX. (305) 262-6978

COMP-ANL\W09-22RC

PH3050 ALUM PROJECT OUT/IN WDW. (L.M.I.)

R.C. ALUMINUM INDUSTRIES INC.
2805 N.W. 75 TH AVE.
MIAMI, FL. 33122
TEL. (305) 592-1515 FAX. (305) 592-2184

revisions:

no	date	by	description
A	03.20.13		NO CHANGE THIS SHEET

date: 04-04-09
scale: 3/8" = 1"
dr. by: HAMID
chk. by:

drawing no.
W09-22

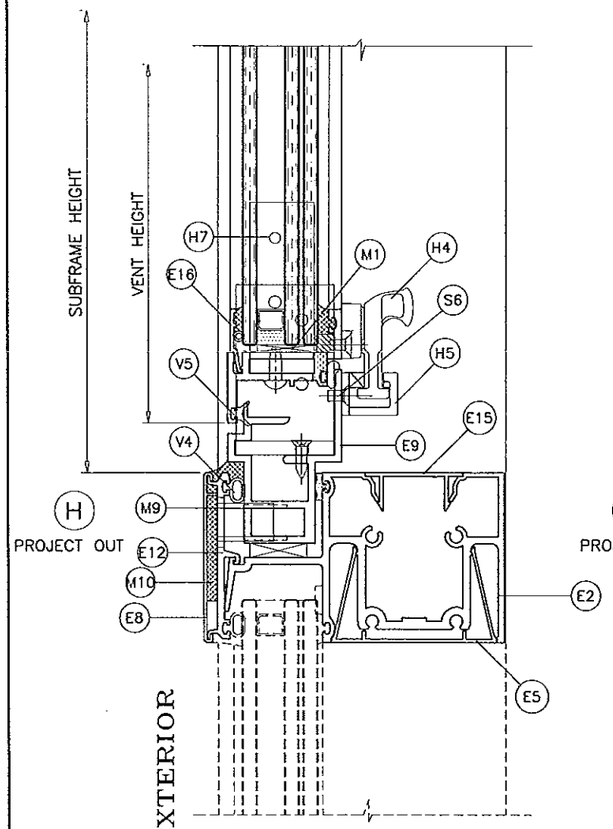

PH3050 WINDOW WALL SYSTEM
SEE SEPARATE NOA FOR
DESIGN LOAD RATING

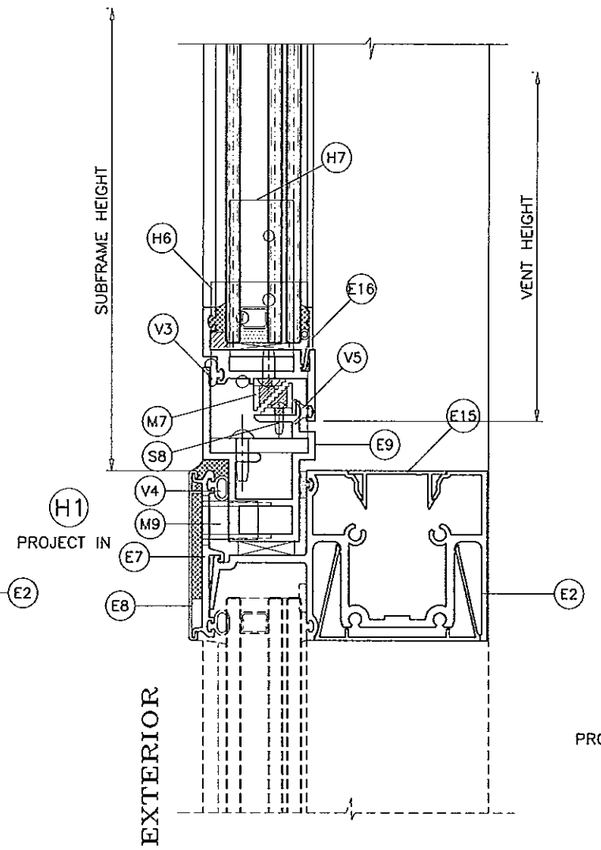

PH3050 WINDOW WALL SYSTEM
SEE SEPARATE NOA FOR
DESIGN LOAD RATING

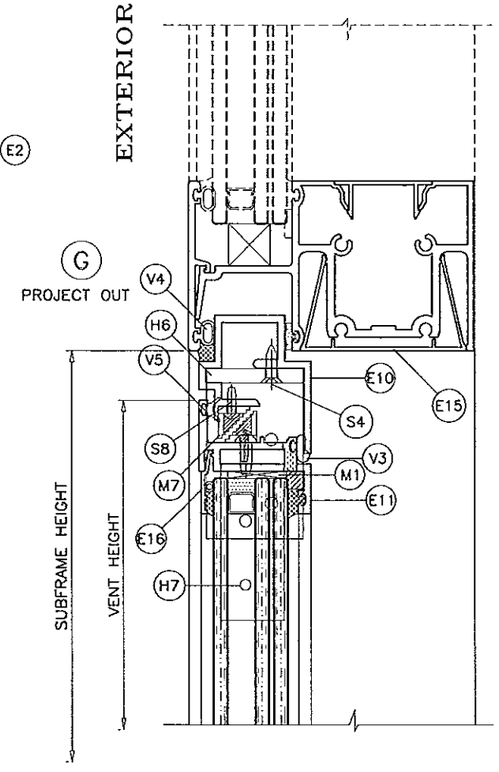

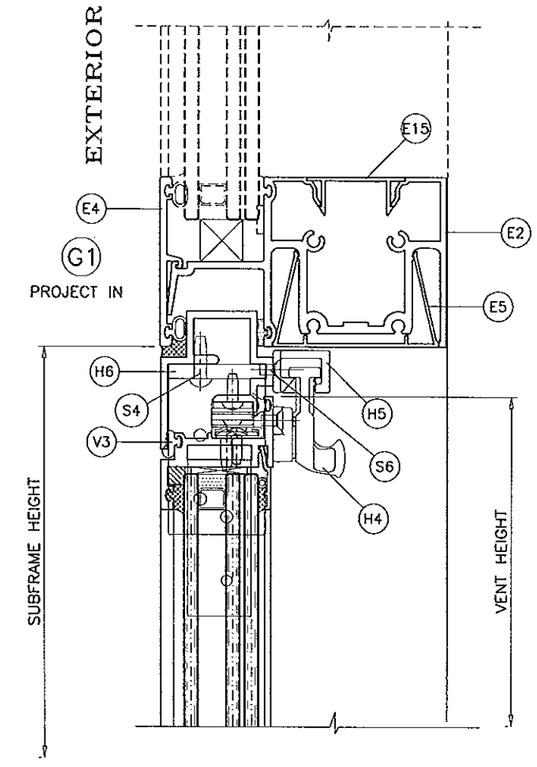

Engr: JAVAD AHMAD
CIVIL
FLA. PE # 70592
C.A.N. 3538

MAR 21 2013

PRODUCT REVISED
as complying with the Florida
Building Code
Acceptance No 13-0328.12
Expiration Date March 24, 2015
By Manuel Perez
Miami Dade Product Control

AL-FAROOQ CORPORATION
ENGINEERS & PRODUCT DEVELOPMENT
1235 S.W. 87 AVE
MIAMI, FLORIDA 33174
TEL (305) 264-8100 FAX. (305) 262-6978

COMP-ANL\W09-22RC

PH3050 ALUM PROJECT OUT/IN WDW. (L.M.I.)

R.C. ALUMINUM INDUSTRIES INC.
2805 N.W. 75 TH AVE.
MIAMI, FL. 33122
TEL (305) 592-1515 FAX. (305) 592-2184

revisions:

no	date	by	description
A	03.20.13		NO CHANGE THIS SHEET

date: 04-04-09
scale: 3/8" = 1"
dr. by: HAMID
chk. by:

drawing no.
W09-22

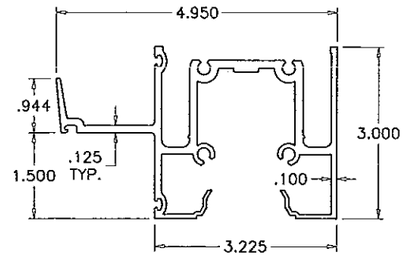

E2 FRAME HEAD/SILL/HORIZONTAL

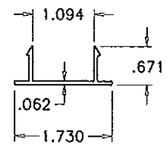

E15 COVER HEAD/SILL/HORIZONTAL

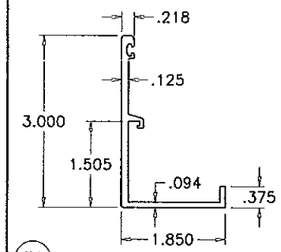

E3 GLAZING RETAINER HEAD/SILL

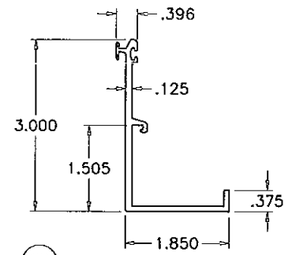

E7 GLAZING RETAINER HEAD/SILL VENT

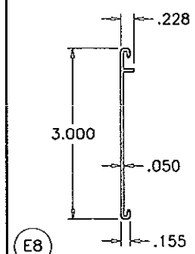

E8 RETAINER COVER

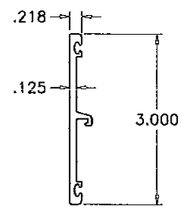

E4 GLAZING RETAINER HORIZONTAL

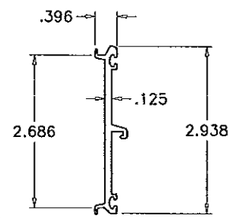

E12 GLAZING RETAINER HORIZONTAL

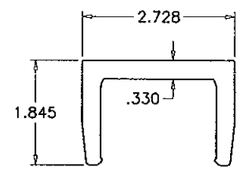

E6 ANCHOR

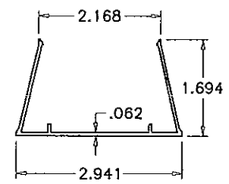

E5 INTERIOR COVER HORIZONTAL

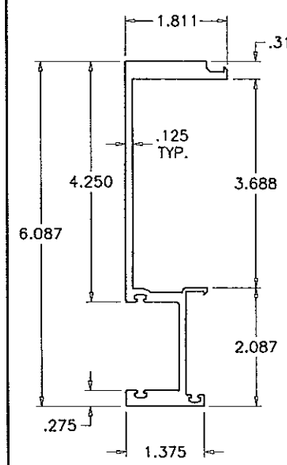

E14 FEMALE MULLION

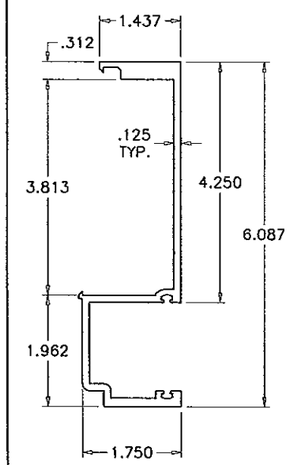

E13 MALE MULLION

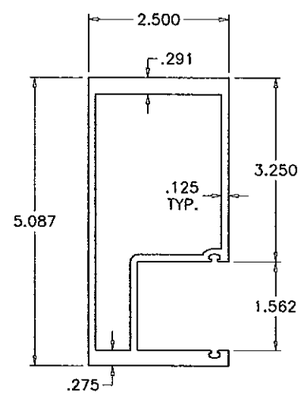

E1 CLOSED FRAME JAMB

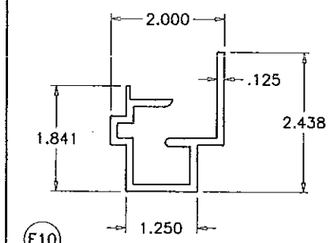

E10 VENT FRAME HEAD/JAMB

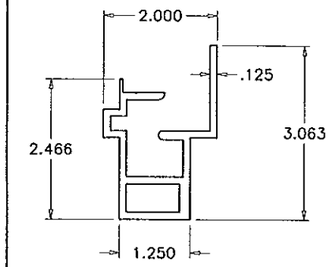

E9 VENT FRAME SILL

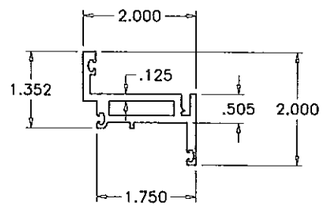

E11 VENT

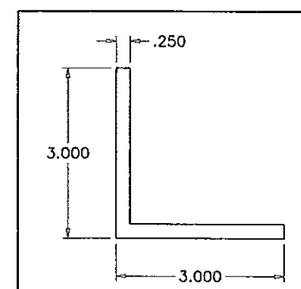

H6 H7 CORNER KEY

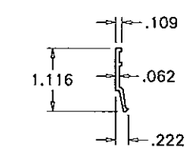

E5 GLAZING BEAD

Engr: JAVAD AHMAD
CIVIL
FLA. PE # 70592
C.A.N. 3538

MAR 2 1 2013

PRODUCT REVISED
as complying with the Florida
Building Code
Acceptance No 13-0328.12
Expiration Date March 24, 2015
By Manuel Paez
Miami Dade Product Control

AL-FAROOQ CORPORATION
ENGINEERS & PRODUCT DEVELOPMENT
1235 S.W. 87 AVE
MIAMI, FLORIDA 33174
TEL. (305) 264-8100 FAX. (305) 262-6978
COMP-ANL\W09-22RC

PH3050 ALUM. PROJECT OUT/IN WDW. (L.M.I.)

R.C. ALUMINUM INDUSTRIES INC.
2805 N.W. 75 TH AVE.
MIAMI, FL. 33122
TEL. (305) 592-1515 FAX. (305) 592-2184

revisions:			
no	date	by	description
A	03.20.13		NO CHANGE THIS SHEET

date: 04-04-09
scale: 3/8" = 1"
dr. by: HAMID
chk. by:

drawing no.
W09-22

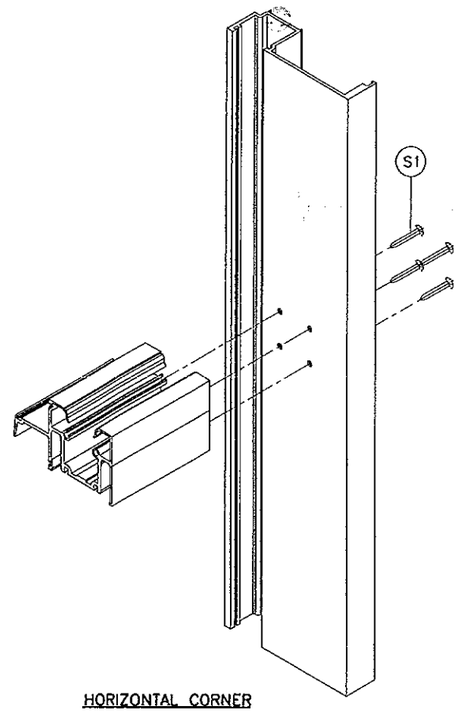

HORIZONTAL CORNER

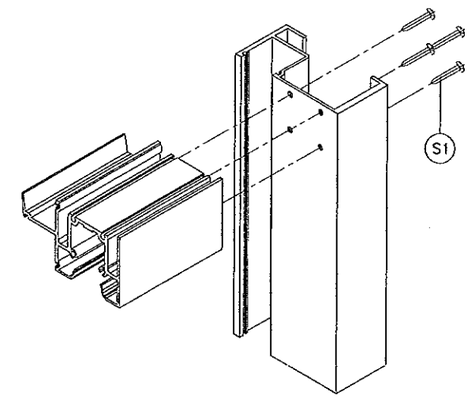

FRAME HEAD/SILL CORNER

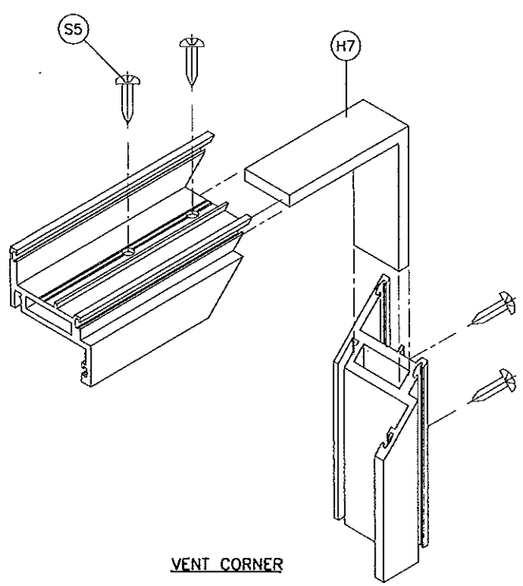

VENT CORNER

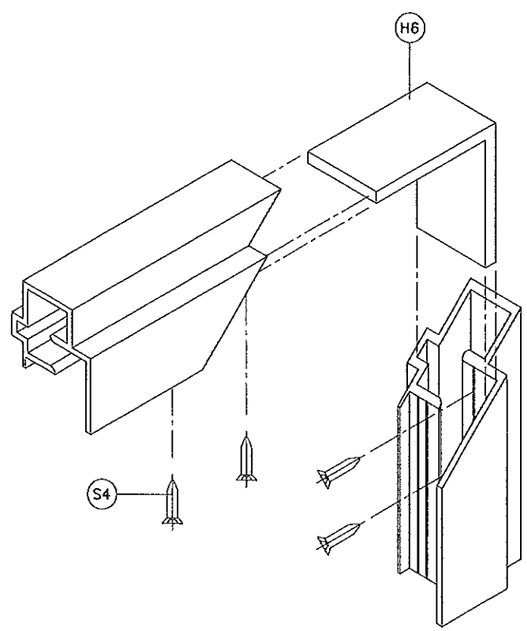

VENT FRAME CORNER

Engr: JAVAD AHMAD
CIVIL
FLA. PE # 70592
C.A.N. 3538

MAR 2 1 2013

PRODUCT REVISED
as complying with the Florida
Building Code
Acceptance No 13-0328.13
Expiration Date March 24, 2015
By Manuel Diaz
Miami-Dade Product Control

AL-FAROOQ CORPORATION
ENGINEERS & PRODUCT DEVELOPMENT
1235 S.W. 87 AVE
MIAMI, FLORIDA 33174
TEL. (305) 264-8100 FAX. (305) 262-6978
COMP-ANL\W09-22RC

PH3050 ALUM PROJECT OUT/IN WDW. (L.M.I.)

R.C. ALUMINUM INDUSTRIES INC.
2805 N.W. 75 TH AVE.
MIAMI, FL. 33122
TEL. (305) 592-1515 FAX. (305) 592-2184

revisions:

no	date	by	description
A	03.20.13		NO CHANGE THIS SHEET

date: 04-04-09
scale: 3/8" = 1"
dr. by: HAMID
chk. by:

drawing no.
W09-22

sheet 10 of 10