MIAMI-DADE COUNTY
PRODUCT CONTROL SECTION
11805 SW 26 Street, Room 208
Miami, Florida 33175-2474
T (786) 315-2590 F (786) 315-2599
www.miamidade.gov/economy

DEPARTMENT OF REGULATORY AND ECONOMIC RESOURCES (RER)
BOARD AND CODE ADMINISTRATION DIVISION

NOTICE OF ACCEPTANCE (NOA)

Ruskin Company
3900 Dr. Greaves Road
Grandview, MO 64030

SCOPE:

This NOA is being issued under the applicable rules and regulations governing the use of construction materials. The documentation submitted has been reviewed and accepted by Miami-Dade County RER-Product Control Section to be used in Miami Dade County and other areas where allowed by the Authority Having Jurisdiction (AHJ).

This NOA shall not be valid after the expiration date stated below. The Miami-Dade County Product Control Section (In Miami Dade County) and/or the AHJ (in areas other than Miami Dade County) reserve the right to have this product or material tested for quality assurance purposes. If this product or material fails to perform in the accepted manner, the manufacturer will incur the expense of such testing and the AHJ may immediately revoke, modify, or suspend the use of such product or material within their jurisdiction. RER reserves the right to revoke this acceptance, if it is determined by Miami-Dade County Product Control Section that this product or material fails to meet the requirements of the applicable building code.

This product is approved as described herein, and has been designed to comply with the Florida Building Code, including the High Velocity Hurricane Zone.

DESCRIPTION: Model ACL1245D Aluminum Louver

APPROVAL DOCUMENT: Drawing No. **60-022207**, titled "ACL1245D Louver", Sheets 1 through 6 of 6, dated 05/20/2011, with revision B dated 07/09/2013, prepared by Ruskin Company, signed and sealed by Daniel J. Rau, P.E., bearing the Miami-Dade County Product Control revision stamp with the Notice of Acceptance number and expiration date by the Miami-Dade County Product Control Section.

MISSILE IMPACT RATING: Large and Small Missile Impact Resistant

LABELING: Each unit shall bear a permanent label with the manufacturer's name or logo, Geneva, AL, model/series, and following statement: "Miami-Dade County Product Control Approved", unless otherwise noted herein.

RENEWAL of this NOA shall be considered after a renewal application has been filed and there has been no change in the applicable building code negatively affecting the performance of this product.

TERMINATION of this NOA will occur after the expiration date or if there has been a revision or change in the materials, use, and/or manufacture of the product or process. Misuse of this NOA as an endorsement of any product, for sales, advertising or any other purposes shall automatically terminate this NOA. Failure to comply with any section of this NOA shall be cause for termination and removal of NOA.

ADVERTISEMENT: The NOA number preceded by the words Miami-Dade County, Florida, and followed by the expiration date may be displayed in advertising literature. If any portion of the NOA is displayed, then it shall be done in its entirety.

INSPECTION: A copy of this entire NOA shall be provided to the user by the manufacturer or its distributors and shall be available for inspection at the job site at the request of the Building Official.

This NOA **revises NOA # 11-0207.21** and consists of this page 1 and evidence page E-1, as well as approval document mentioned above.

The submitted documentation was reviewed by **Carlos M. Utrera, P.E.**

MIAMI-DADE COUNTY APPROVED

09/19/2013

NOA No. 13-0502.05
Expiration Date: August 04, 2016
Approval Date: September 19, 2013

NOTICE OF ACCEPTANCE: EVIDENCE SUBMITTED

A. DRAWINGS

1. Drawing No. **60-022207**, titled "ACL1245D Louver", Sheets 1 through 6 of 6, dated 05/20/2011, with revision B dated 07/09/2013, prepared by Ruskin Company, signed and sealed by Daniel J. Rau, P.E.

B. TESTS *"Submitted under NOA # 11-0207.21"*

1. Test reports on 1) Uniform Static Air Pressure Test, Loading per FBC TAS 202-94
   2) Large Missile Impact Test per FBC, TAS 201-94
   3) Cyclic Wind Pressure Loading per FBC, TAS 203-94

   along with marked-up drawings and installation diagram of Series ACL1245D Aluminum Louvers", prepared by National Certified Testing Laboratories, Report No. **210-3711-2**, dated 11/05/2010, signed and sealed by Gerald J. Ferrara, P.E.

C. CALCULATIONS *"Submitted under NOA # 11-0207.21"*

1. Anchor verification calculations and structural analysis, complying with FBC-2007, prepared by Ruskin Company, dated 01/11/2011, signed and sealed by William J. Mossie, P.E.

D. QUALITY ASSURANCE

1. Miami-Dade Department of Regulatory and Economic Resources (RER)

E. MATERIAL CERTIFICATIONS

1. Test report on impact test per AMCA 540 of an ACL1245D Acoustical louver, prepared by Ruskin Company, Test Report No. **082412C**, dated 08/24/2012, signed and sealed by Daniel J. Rau, P.E.

F. STATEMENTS

1. Statement letter of code conformance to 2010 FBC, issued by Ruskin Company, dated 03/19/2013, signed and sealed by Daniel J. Rau, P.E.
2. Statement letter of no financial interest, issued by Ruskin Company, dated 07/12/2013, signed and sealed by Daniel J. Rau, P.E.

09/19/2013

Carlos M. Utrera, P.E.
Product Control Examiner
NOA No. 13-0502.05
Expiration Date: August 04, 2016
Approval Date: September 19, 2013

FRAME	
Formed .125" aluminum channel.	X
BLADES	
Formed .081" aluminum exterior w/ .050" perforated aluminum interior surface.	X
4" Thick Mineral Wool Blanket. 4 # Density	X
SCREEN	
1/2" mesh x 19 ga galv bird screen.	
5/8" x .040" expanded flattened aluminum bird screen.	
1/2" mesh x .063" aluminum bird screen.	
18-16 mesh al. insect screen.	
No screen.	X
FINISH	
Mill.	X
Kynar (opt).	
Baked enamel (modified fluoropolymer, 50% Kynar, opt).	
Color anodize (opt).	
Clear anodize (opt).	
ACCESSORIES (opt)	
Flange frame.	
Extended sill.	
Clip angles.	X
Blankoff panel.	

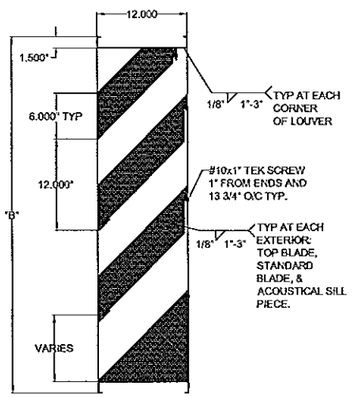

ACL1245D

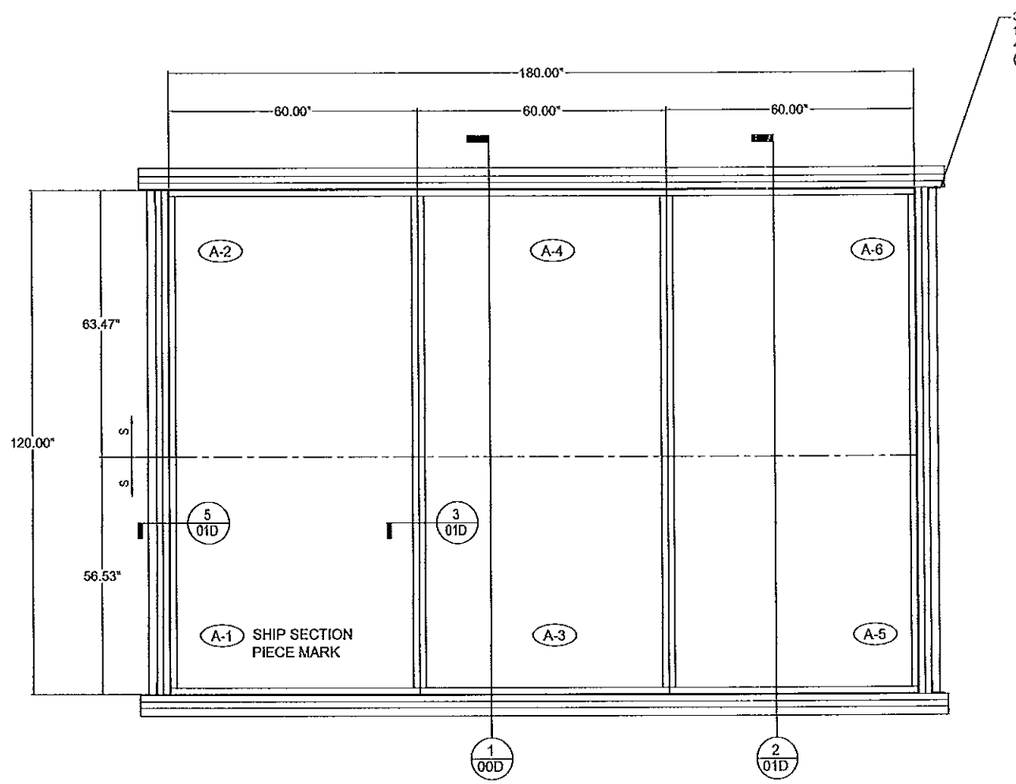

ASSEMBLY 'A'
N.T.S.
3-ASSEMBLIES REQUIRED WITH 6-SHIP SECTIONS

FRONT VIEW

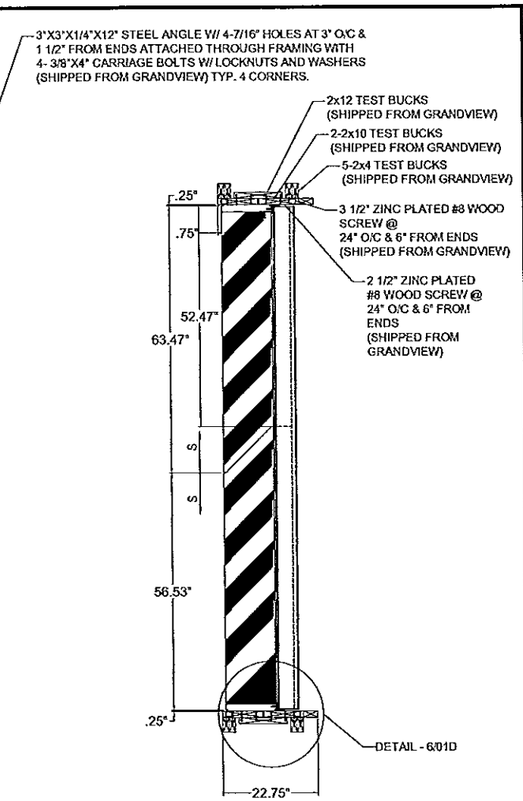

1 SECTION
N.T.S.

NOTES:

1) THE ACL1245D HAS BEEN TESTED IN ACCORDANCE WITH MIAMI-DADE COUNTY PROTOCOLS TAS-201, 202 & 203 FOR LARGE MISSLE IMPACT, UNIFORM PRESSURE AND CYCLIC WIND PRESSURE.

2) THIS LOUVER SYSTEM IS APPROVED FOR APPLICATIONS WITH DESIGN PRESSURES OF +/- 150 PSF OR LESS.

3) THIS LOUVER SYSTEM IS NON-BEARING AND IS NOT DESIGNED TO WITHSTAND BUILDING DEAD LOADS.

4) LOUVER ANCHORS ARE REVIEWED FOR ATTACHMENT INTO STEEL, CONCRETE, MASONRY OR TIMBER SUBSTRUCTURE. MINIMUM EDGE DISTANCE AND EMBEDMENT REQUIREMENTS ARE SHOWN. RUSKIN DOES NOT DETERMINE THE STRUCTURAL INTEGRITY OF THE SUB-STRUCTURE.

5) MAXIMUM SINGLE SECTION SIZE: 60" WIDE X 120" HIGH.

7) MAXIMUM ASSEMBLED LOUVER SIZE: UNLIMITED WIDE X 120" HIGH. MAX. MULLION SPACING IS 60".

8) SECTIONS OR ASSEMBLIES MAY BE STACKED VERTICALLY PROVIDING A SUITABLE STRUCTURAL SUPPORT IS DESIGNED AND INSTALLED BY OTHERS TO SUPPORT ALL LOADS TRANSFERRED FROM THE LOUVER.

9) THIS LOUVER IS TO BE INSTALLED IN A LOCATION WHERE THE ROOM BEHIND THE LOUVER IS DESIGNED TO DRAIN WATER PENETRATING INTO THE ROOM, AND THE ROOM WILL HOUSE WATER RESISTANT/WATER PROOF EQUIPMENT, COMPONENTS OR SUPPLIES.

DRAWING INDEX:

60-022207-00D ACL1245D TEST LOUVER - SPEC, ASS'Y AND NOTES
Drawing 1 of 6.
60-022207-01D ACL1245D TEST LOUVER - SECTION AND DETAILS
Drawing 2 of 6.
60-022207-02D ACL1245D TEST LOUVER - SECTION AND DETAILS
Drawing 3 of 6.
60-022207-03D ACL1245D TEST LOUVER - SECTION AND DETAILS
Drawing 4 of 6.
60-022207-04D ACL1245D TEST LOUVER - PART DETAILS
Drawing 5 of 6.
60-022207-05D ACL1245D TEST LOUVER - PART DETAILS
Drawing 6 of 6.

TESTS PERFORMED:
TAS-201 LARGE MISSLE IMPACT
TAS-202 UNIFORM STATIC AIR PRESSURE TEST
TAS-203 CYCLIC WIND PRESSURE TEST
DESIGN PRESSURE RATING 150 PSF

FOR OFFICE USE ONLY

PRODUCT REVISED
as complying with the Florida Building Code
Acceptance No 13-0507.05
Expiration Date 08/04/2016
By
Miami Dade Product Control

DANIEL J. RAU
LICENSE
NO. 63636
STATE OF FLORIDA
PROFESSIONAL ENGINEER

7/14/2013

ENGINEER OF RECORD
DANIEL J. RAU
ENGINEERING DISCIPLINE:
CIVIL ENGINEER
STATE OF FLORIDA #63636

REV.	DESCRIPTION	DATE	REV'D BY	CHK'D BY	APP'D BY
B	REVISED NOTES, DRAWING INDEX & ENGINEER OF RECORD	07/09/13	RKP	DJR	DJR
A	REVISED BLADE WELDING INFORMATION	10/14/10	VMA		

NOTE:
1) ALL DIMENSIONS ARE GIVEN IN INCHES.
2) ALL EXPOSED SURFACES MUST BE FREE OF DIE LINES.
3) ALUMINUM ASSOCIATION TOLERANCES APPLY UNLESS OTHERWISE SPECIFIED.
4) ** EXTRUDER SPECIFIC ID MARK: .008R x .008DP

TOLERANCES UNLESS SPECIFIED OTHERWISE
3 PLACE .XXX ±.010
2 PLACE .XX ±.020
ANGLE DIMENSIONS ± 2°
USE W/CA-007 & 008

THIS INFORMATION DISCLOSED HEREIN WAS ORIGINATED BY AND IS THE PROPERTY OF RUSKIN INDUSTRIES, AND EXCEPT FOR USES EXPRESSLY GRANTED TO THE UNITED STATES GOVERNMENT, RUSKIN INDUSTRIES RESERVES ALL PATENT, PROPRIETARY, DESIGN, USE, SALE, MANUFACTURING AND REPRODUCTION RIGHTS THERETO. THIS DOES NOT APPLY TO ANY VENDOR PARTS.

CTR	CENTER	OC	ON CENTER
CL	CENTER LINE	OD	OUTSIDE DIAMETER
C-C	CENTER TO CENTER	OR	OUTSIDE RADIUS
CHAM	CHAMFER	PI	POINT OF INTERSECTION
DAT	DATUM	R	FULL RADIUS
DET	DETAIL	REF	REFERENCE
E-E	END TO END	SYM	SYMMETRICAL
EXP	EXPOSED	TAN	TANGENT
ID	INSIDE DIAMETER	TYP	TYPICAL
IR	INSIDE RADIUS		

RUSKIN
SWARTWOUT

3900 DR. GREAVES RD
GRANDVIEW, MO 64030
PH: (816) 761-7476 FAX: (816) 763-8102

AREA	EST. PER.	EST. WT/FT.
-	-	-
ALLOY & TEMPER	**UNSPEC. RADII**	**UNSPEC. WALL**
-	-	-

DWN:	WJM	CHK:		APPV:	
DATE:	05/20/2011	DATE:		DATE:	

PART DESC.
ACL1245D LOUVER
SPECS, ASSY'S
AND NOTES

SCALE: NTS | ECN: - | DATE:

DWG No. Drawing 1 of 6
60 - 022207 -00D

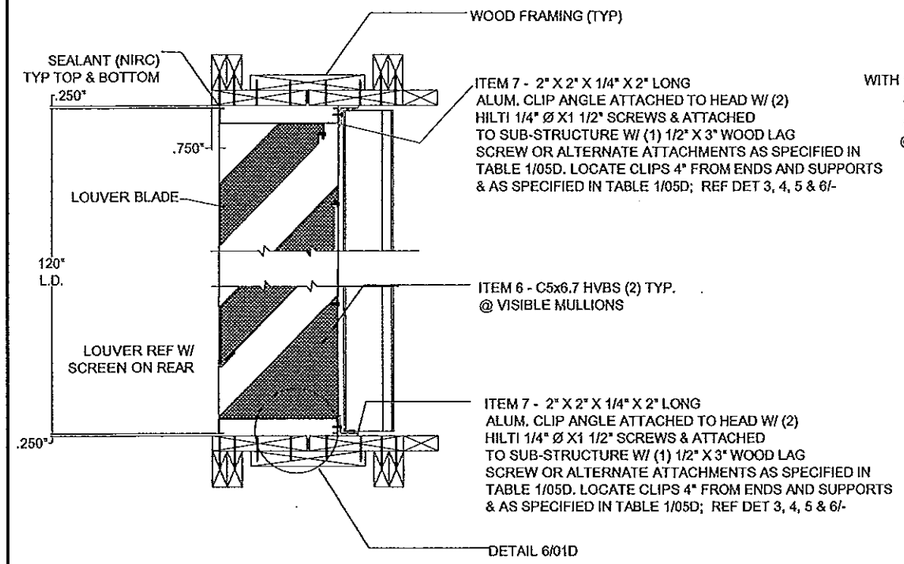

2 / 00D LOUVER DETAIL @ HEAD & SILL
N.T.S.

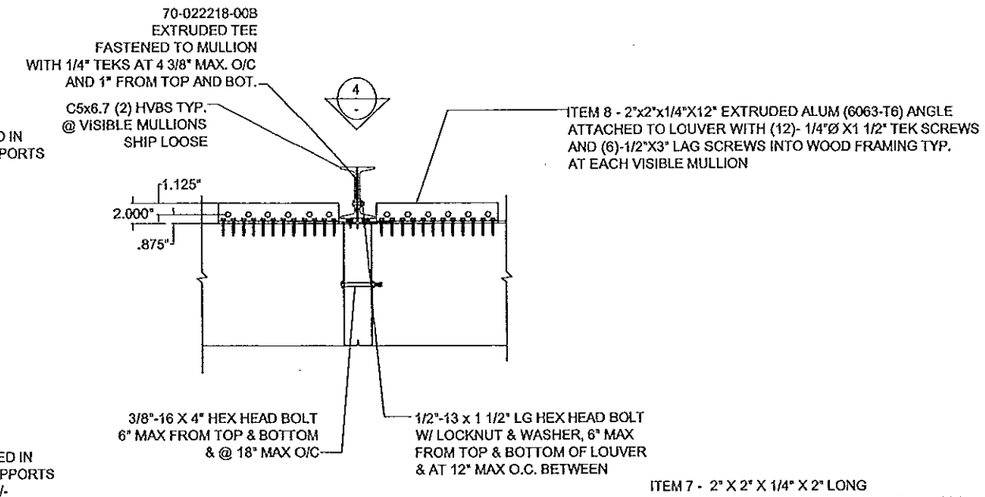

3 / - MULLION DETAIL
N.T.S.

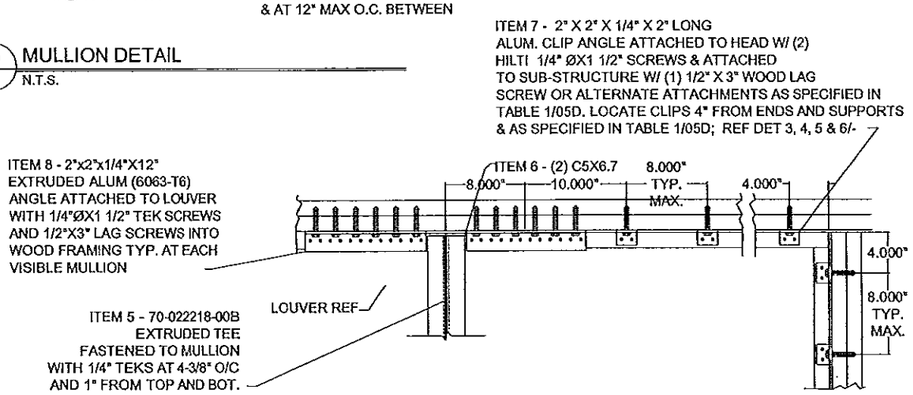

4 / 00D MULLION REAR ELEVATION & CORNER CONDITION
N.T.S.

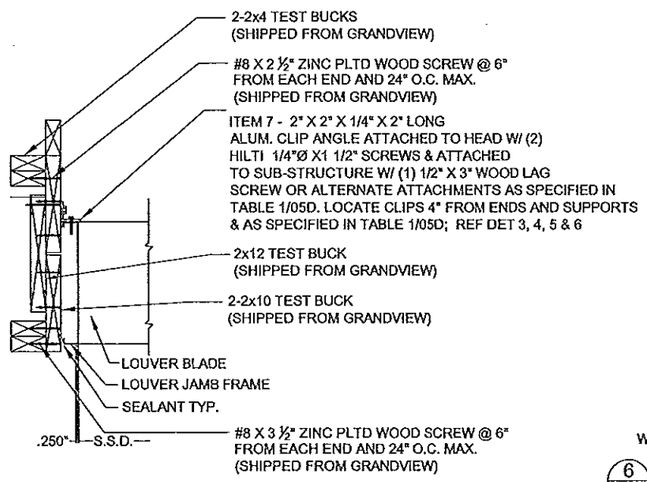

5 / 00D LOUVER @ JAMB DETAIL
N.T.S.

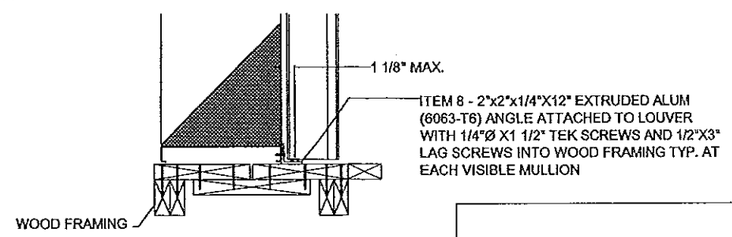

6 / 01D SILL DETAIL @ WOOD FRAME (HEAD SIM)
N.T.S.

FOR OFFICE USE ONLY

PRODUCT REVISED
as complying with the Florida Building Code
Acceptance No 13-0502.05
Expiration Date 08/04/2016
By
Miami Dade Product Control

DANIEL J. RAU
LICENSE
NO. 63636
STATE OF FLORIDA
PROFESSIONAL ENGINEER
7/14/2013

ENGINEER OF RECORD:
DANIEL J. RAU
ENGINEERING DISCIPLINE:
CIVIL ENGINEER
STATE OF FLORIDA #63636

REV.	REVISED ENGINEER OF RECORD	DATE	REV'D BY	CHK'D BY	APP'D BY
B		07/09/13	RKP	DJR	DJR

TOLERANCES UNLESS SPECIFIED OTHERWISE
3 PLACE XXX ±.010
2 PLACE XX ±.020
ANGLE DIMENSIONS ±2°
USE WQ-007 & 008

NOTE:
1) ALL DIMENSIONS ARE GIVEN IN INCHES.
2) ALL EXPOSED SURFACES MUST BE FREE OF DIE LINES.
3) ALUMINUM ASSOCIATION TOLERANCES APPLY UNLESS OTHERWISE SPECIFIED.
4) ™ EXTRUDER SPECIFIC ID MARK: .008R x .008DP

THIS INFORMATION DISCLOSED HEREIN WAS ORIGINATED BY AND IS THE PROPERTY OF RUSKIN INDUSTRIES, AND EXCEPT FOR USES EXPRESSLY GRANTED TO THE UNITED STATES GOVERNMENT, RUSKIN INDUSTRIES RESERVES ALL PATENT, PROPRIETARY, DESIGN, USE, SALE, MANUFACTURING AND REPRODUCTION RIGHTS THERETO. THIS DOES NOT APPLY TO ANY VENDOR PARTS.

CTR	CENTER	OC	ON CENTER
CL	CENTER LINE	OD	OUTSIDE DIAMETER
C-C	CENTER TO CENTER	OR	OUTSIDE RADIUS
CHAM	CHAMFER	PI	POINT OF INTERSECTION
DAT	DATUM	R	FULL RADIUS
DET	DETAIL	REF	REFERENCE
E-E	END TO END	SYM	SYMMETRICAL
EXP	EXPOSED	TAN	TANGENT
ID	INSIDE DIAMETER	TYP	TYPICAL
IR	INSIDE RADIUS		

RUSKIN
SWARTWOUT
3900 DR. GREAVES RD
GRANDVIEW, MO.64030
PH: (816) 761-7476 FAX: (816) 763-8102

AREA	EST. PER.	EST. WT/FT.
-	-	-
ALLOY & TEMPER	UNSPEC. RADII	UNSPEC. WALL
-	-	

DWN:	WJM	CHK:		APPV:	
DATE:	05/20/2011	DATE:		DATE:	

PART DESC.
ACL1245D LOUVER
SECTION AND DETAILS

SCALE: NTS | ECN: - | DATE:

DWG No. Drawing 2 of 6
60 – 022207 –01D

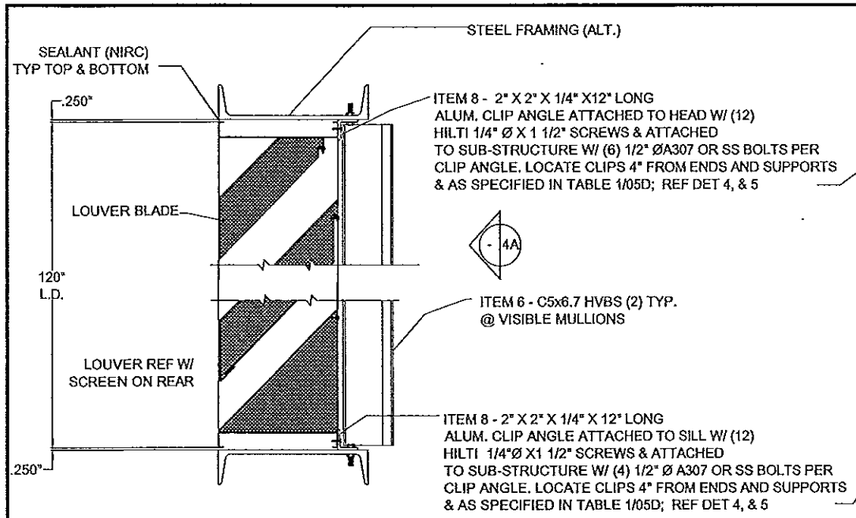

2 / 00D LOUVER DETAIL @ HEAD & SILL
N.T.S.
ALT. STRUCTURE - STEEL FRAME
12 GAUGE MIN. THICKNESS

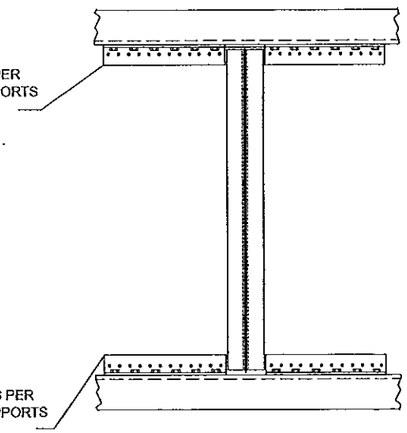

4A / 00D MULLION REAR ELEVATION
N.T.S.
ALT. STRUCTURE - STEEL FRAME
12 GAUGE MIN. THICKNESS

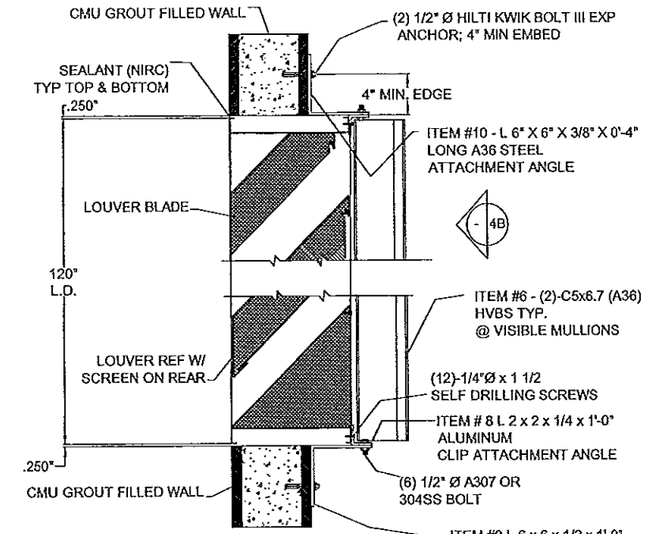

2B / 00D LOUVER DETAIL @ HEAD & SILL
N.T.S.
ALT. STRUCTURE - CMU BLOCK

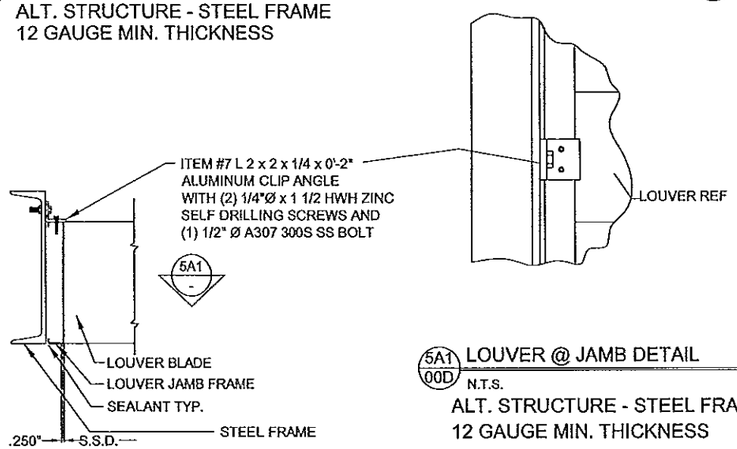

5 / 00D LOUVER @ JAMB DETAIL
N.T.S.
ALT. STRUCTURE - STEEL FRAME
12 GAUGE MIN. THICKNESS

5A1 / 00D LOUVER @ JAMB DETAIL
N.T.S.
ALT. STRUCTURE - STEEL FRAME
12 GAUGE MIN. THICKNESS

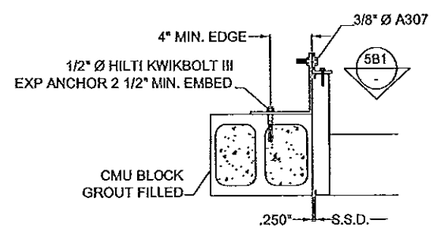

5B / 00D LOUVER @ JAMB DETAIL
N.T.S.
ALT. STRUCTURE - CMU BLOCK

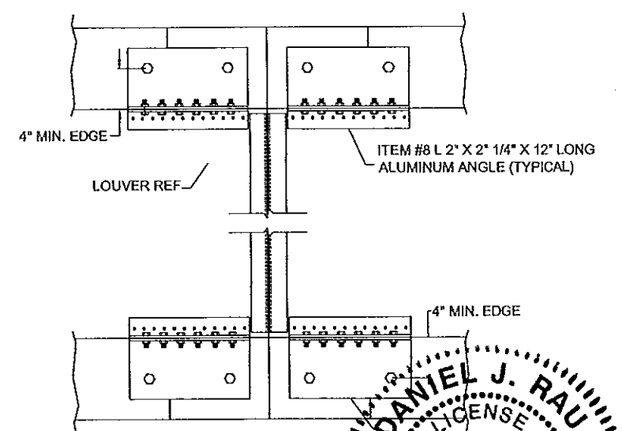

4B / 00D MULLION REAR ELEVATION
N.T.S.
ALT. STRUCTURE - CMU BLOCK

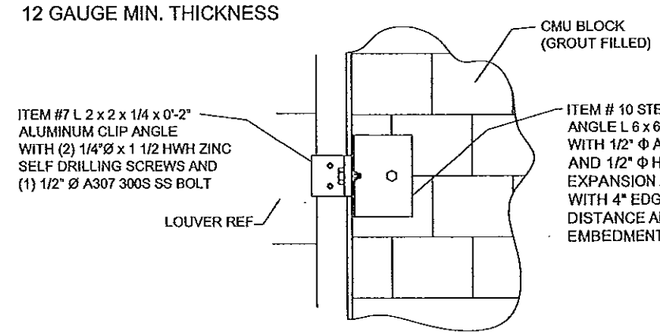

5B1 / 00D LOUVER @ JAMB DETAIL
N.T.S.
ALT. STRUCTURE - CMU BLOCK

FOR OFFICE USE ONLY

PRODUCT REVISED
as complying with the Florida
Building Code
Acceptance No 13-0502.05
Expiration Date 08/04/2016
By
Miami Dade Product Control

DANIEL J. RAU
LICENSE
NO. 63636
STATE OF
FLORIDA
PROFESSIONAL ENGINEER
7/14/2013

ENGINEER OF RECORD:
DANIEL J. RAU
ENGINEERING DISCIPLINE:
CIVIL ENGINEER
STATE OF FLORIDA #63636

REV.	DESCRIPTION	DATE	REV'D BY	CHK'D BY	APP'D BY
B	REVISED ENGINEER OF RECORD	07/09/13	RKP	DJR	DJR

TOLERANCES UNLESS SPECIFIED OTHERWISE
3 PLACE .XXX ±.010
2 PLACE .XX ±.020
ANGLE DIMENSIONS ± 2°
USE WIQ-007 & 008

NOTE:
1) ALL DIMENSIONS ARE GIVEN IN INCHES.
2) ALL EXPOSED SURFACES MUST BE FREE OF DIE LINES.
3) ALUMINUM ASSOCIATION TOLERANCES APPLY UNLESS OTHERWISE SPECIFIED.
4) ** EXTRUDER SPECIFIC ID MARK: .008R x .008DP

THIS INFORMATION DISCLOSED HEREIN WAS ORIGINATED BY AND IS THE PROPERTY OF RUSKIN INDUSTRIES, AND EXCEPT FOR USES EXPRESSLY GRANTED TO THE UNITED STATES GOVERNMENT, RUSKIN INDUSTRIES RESERVES ALL PATENT, PROPRIETARY, DESIGN, USE, SALE, MANUFACTURING AND REPRODUCTION RIGHTS THERETO. THIS DOES NOT APPLY TO ANY VENDOR PARTS.

CTR	CENTER	OC	ON CENTER
CL	CENTER LINE	OD	OUTSIDE DIAMETER
C-C	CENTER TO CENTER	OR	OUTSIDE RADIUS
CHAM	CHAMFER	PI	POINT OF INTERSECTION
DAT	DATUM	R	FULL RADIUS
DET	DETAIL	REF	REFERENCE
E-E	END TO END	SYM	SYMMETRICAL
EXP	EXPOSED	TAN	TANGENT
ID	INSIDE DIAMETER	TYP	TYPICAL
IR	INSIDE RADIUS		

RUSKIN
SWARTWOUT
3900 DR. GREAVES RD
GRANDVIEW, MO.64030
PH: (816) 761-7476 FAX: (816) 763-8102

AREA	EST. PER.	EST. WT/FT.
-	-	-
ALLOY & TEMPER	**UNSPEC. RADII**	**UNSPEC. WALL**
-	-	-

DWN:	WJM	CHK:		APPV:	
DATE:	04/18/2011	DATE:		DATE:	

PART DESC.
ACL1245D LOUVER
SECTION AND DETAILS

SCALE: NTS | ECN: - | DATE:

DWG No. 60 – 022207 – 02D
Drawing 3 of 6

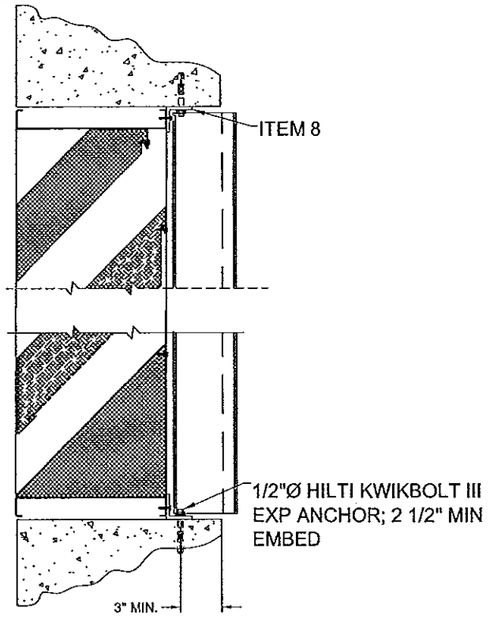

2C 00D LOUVER DETAIL @ HEAD & SILL
N.T.S.
ALT. STRUCTURE - CONCRETE SUPPORT

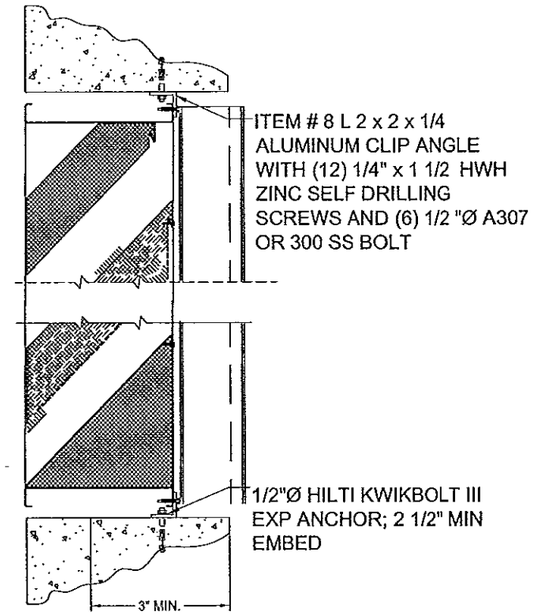

2C-ALT 00D LOUVER DETAIL @ HEAD & SILL
N.T.S.
ALT. STRUCTURE - CONCRETE SUPPORT

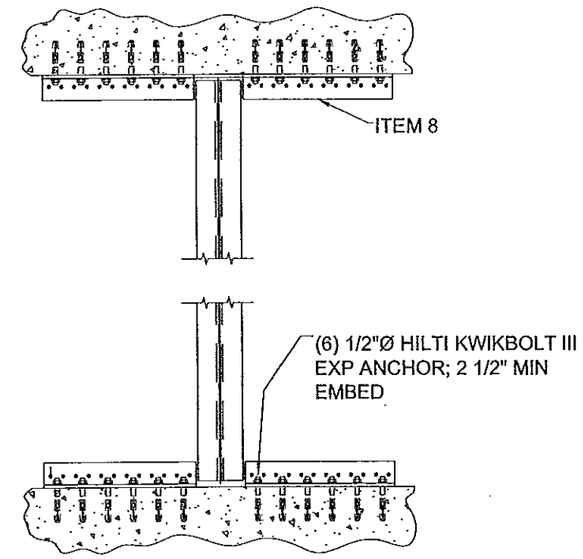

4C 00D MULLION REAR ELEVATION
N.T.S.
ALT. STRUCTURE - CONCRETE SUPPORT

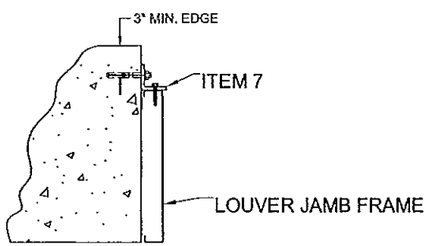

5C 00D LOUVER @ JAMB DETAIL
N.T.S.
ALT. STRUCTURE -CONCRETE SUPPORT

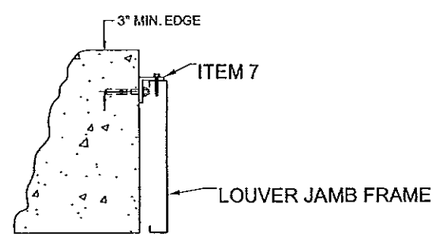

5C-ALT 00D LOUVER @ JAMB DETAIL
N.T.S.
ALT. STRUCTURE - CONCRETE SUPPORT

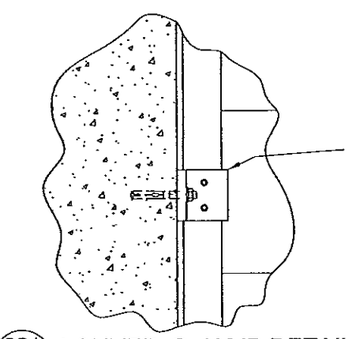

5C1 00D LOUVER @ JAMB DETAIL
N.T.S.
ALT. STRUCTURE - CONCRETE SUPPORT

PRODUCT REVISED
as complying with the Florida
Building Code
Acceptance No 13-0502.05
Expiration Date 08/04/2016
By
Miami Dade Product Control

FOR OFFICE USE ONLY

DANIEL J. RAU
LICENSE
NO. 63636
STATE OF
FLORIDA
PROFESSIONAL ENGINEER

7/14/2013

ENGINEER OF RECORD:
DANIEL J. RAU
ENGINEERING DISCIPLINE:
CIVIL ENGINEER
STATE OF FLORIDA #63636

REV.	DESCRIPTION	DATE	REV'D BY	CHK'D BY	APP'D BY
B	REVISED ENGINEER OF RECORD	07/09/13	RKP	DJR	DJR

TOLERANCES
UNLESS SPECIFIED OTHERWISE
3 PLACE .XXX ±.010
2 PLACE .XX ±.005
ANGLE DIMENSIONS ±2°
USE WIQ-007 & 008

NOTE:
1) ALL DIMENSIONS ARE GIVEN IN INCHES.
2) ALL EXPOSED SURFACES MUST BE FREE OF DIE LINES.
3) ALUMINUM ASSOCIATION TOLERANCES APPLY UNLESS OTHERWISE SPECIFIED.
4) ~ EXTRUDER SPECIFIC ID MARK: .008R x .008DP

THIS INFORMATION DISCLOSED HEREIN WAS ORIGINATED BY AND IS THE PROPERTY OF RUSKIN INDUSTRIES, AND EXCEPT FOR USES EXPRESSLY GRANTED TO THE UNITED STATES GOVERNMENT, RUSKIN INDUSTRIES RESERVES ALL PATENT, PROPRIETARY, DESIGN, USE, SALE, MANUFACTURING AND REPRODUCTION RIGHTS THERETO. THIS DOES NOT APPLY TO ANY VENDOR PARTS.

CTR	CENTER	OC	ON CENTER
CL	CENTER LINE	OD	OUTSIDE DIAMETER
C-C	CENTER TO CENTER	OR	OUTSIDE RADIUS
CHAM	CHAMFER	PI	POINT OF INTERSECTION
DAT	DATUM	R	FULL RADIUS
DET	DETAIL	REF	REFERENCE
E-E	END TO END	SYM	SYMMETRICAL
EXP	EXPOSED	TAN	TANGENT
ID	INSIDE DIAMETER	TYP	TYPICAL
IR	INSIDE RADIUS		

RUSKIN
SWARTWOUT
3900 DR. GREAVES RD
GRANDVIEW, MO 64030
PH: (816) 761-7476 FAX: (816) 763-8102

AREA	EST. PER.	EST. WT/FT.
-	-	-
ALLOY & TEMPER	UNSPEC. RADII	UNSPEC. WALL
-	-	

DWN:	WJM	CHK:		APPV:	
DATE:	05/05/2011	DATE:		DATE:	

PART DESC.
ACL1245D LOUVER
SECTION AND DETAILS

SCALE: NTS | ECN: - | DATE:

DWG No. Drawing 4 of 6
60 - 022207 -03D

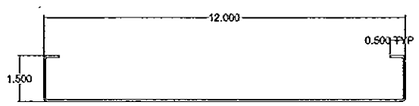

ITEM 1 - HEAD, JAMB AND SILL FRAME

RUSKIN# 70-020440-008-4
ALUMINUM FLAT CUT= 15 1/2"

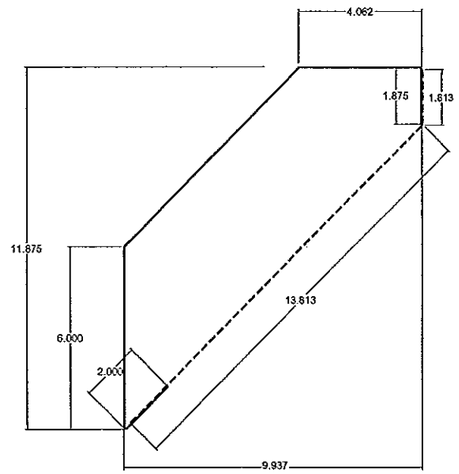

ITEM 2 - TOP BLADE

RUSKIN# 70-020441-008
ALUMINUM FLAT CUT(EXT. BLD.)= 22"
ALUMINUM FLAT CUT(INT. BLD.= 15 5/8"

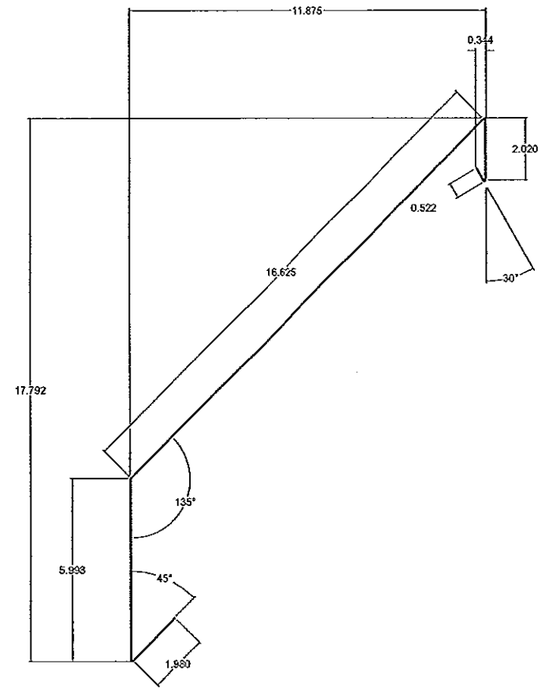

EXTERIOR BLADE

ALUMINUM FLAT CUT= 27 1/16"

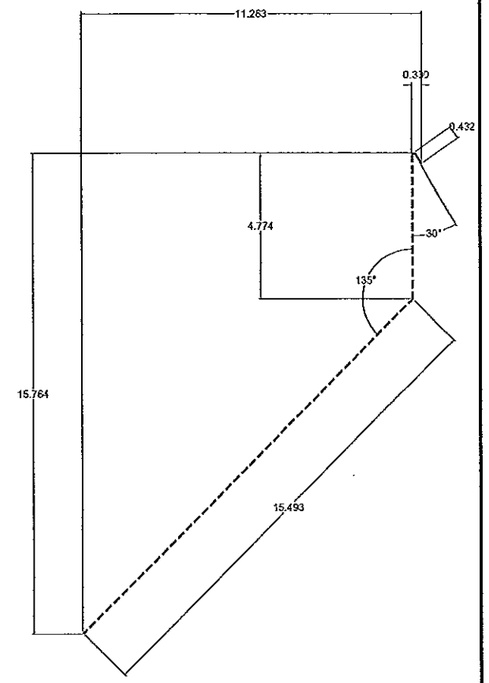

INTERIOR BLADE

ALUMINUM FLAT CUT= 20 5/8"

ITEM 3 - TYPICAL BLADE

RUSKIN# 70-020445-008

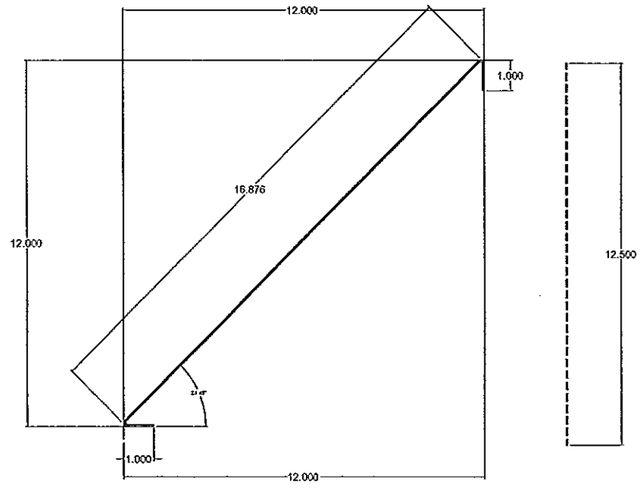

EXTERIOR BLADE

ALUMINUM FLAT CUT(EXT. BLD.)= 16 7/8"

INTERIOR CLOSURE

ALUMINUM FLAT CUT= 12 1/2"

ITEM 4 - SILL PIECE

RUSKIN# 70-020446-008

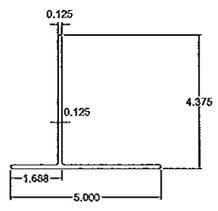

ITEM 5 - HVBS TEE

RUSKIN# 70-022218-008

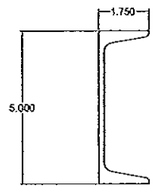

ITEM 6 - C5x6.7 STEEL CHANNEL

HOT DIPPED GALVANIZED ASTM A123

FOR OFFICE USE ONLY

PRODUCT REVISED
as complying with the Florida
Building Code
Acceptance No 13-0502.05
Expiration Date 08/04/2016
By
Miami Dade Product Control

DANIEL J. RAU
LICENSE
NO. 63636
STATE OF
FLORIDA
PROFESSIONAL ENGINEER

7/14/2013

ENGINEER OF RECORD:
DANIEL J. RAU

ENGINEERING DISCIPLINE:
CIVIL ENGINEER

STATE OF FLORIDA #63636

REV.	DESCRIPTION	DATE	REV'D BY	CHK'D BY	APP'D BY
B	REVISED ENGINEER OF RECORD	07/09/13	RKP	DJR	DJR

TOLERANCES UNLESS SPECIFIED OTHERWISE
3 PLACE .XXX ±.010
2 PLACE .XX ±.020
ANGLE DIMENSIONS ±2°
USE WIC-007 & 008

NOTE:
1) ALL DIMENSIONS ARE GIVEN IN INCHES.
2) ALL EXPOSED SURFACES MUST BE FREE OF DIE LINES.
3) ALUMINUM ASSOCIATION TOLERANCES APPLY UNLESS OTHERWISE SPECIFIED.
4) ** EXTRUDER SPECIFIC ID MARK: .008R x .008DP

THIS INFORMATION DISCLOSED HEREIN WAS ORIGINATED BY AND IS THE PROPERTY OF RUSKIN INDUSTRIES, AND EXCEPT FOR USES EXPRESSLY GRANTED TO THE UNITED STATES GOVERNMENT, RUSKIN INDUSTRIES RESERVES ALL PATENT, PROPRIETARY, DESIGN, USE, SALE, MANUFACTURING AND REPRODUCTION RIGHTS THERETO. THIS DOES NOT APPLY TO ANY VENDOR PARTS.

CTR	CENTER	OC	ON CENTER
CL	CENTER LINE	OD	OUTSIDE DIAMETER
C-C	CENTER TO CENTER	OR	OUTSIDE RADIUS
CHAM	CHAMFER	PI	POINT OF INTERSECTION
DAT	DATUM	R	FULL RADIUS
DET	DETAIL	REF	REFERENCE
E-E	END TO END	SYM	SYMMETRICAL
EXP	EXPOSED	TAN	TANGENT
ID	INSIDE DIAMETER	TYP	TYPICAL
IR	INSIDE RADIUS		

RUSKIN
SWARTWOUT

3900 DR. GREAVES RD
GRANDVIEW, MO 64030
PH: (816) 761-7476 FAX: (816) 763-8102

AREA	EST. PER.	EST. WT/FT.
-	-	-
ALLOY & TEMPER	UNSPEC. RADII	UNSPEC. WALL
-	-	

DWN:	WJM	CHK:		APPV:	
DATE:	05/05/2011	DATE:		DATE:	

PART DESC.
ACL1245D LOUVER
PART DETAILS

SCALE: NTS | ECN: - | DATE:

DWG No. Drawing 5 of 6
60 - 022207 -04D

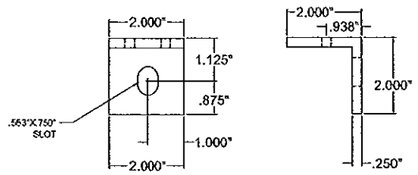

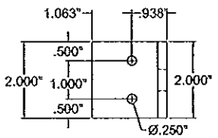

ITEM 7 - CLIP ANGLE

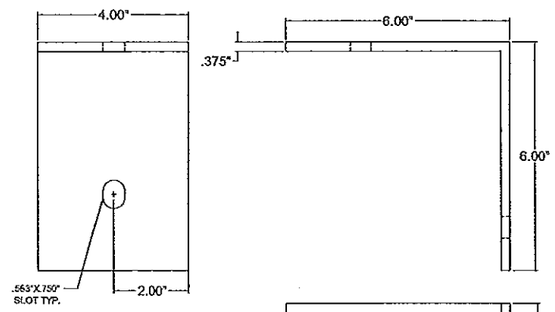

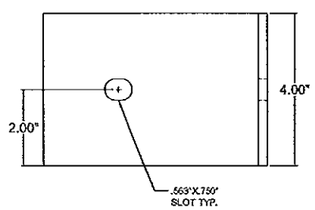

ITEM 10 - 4" CLIP @ HVBS

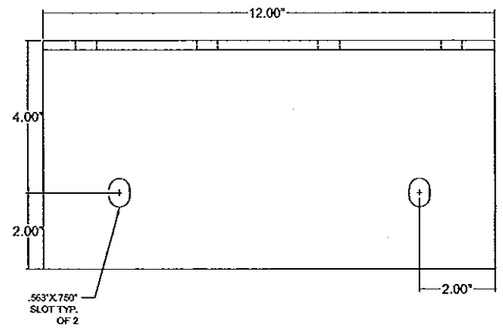

ITEM 9 - 12" CLIP @ HVBS

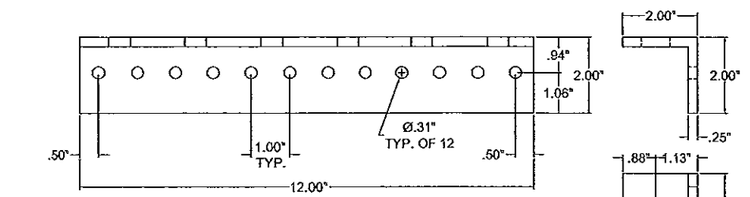

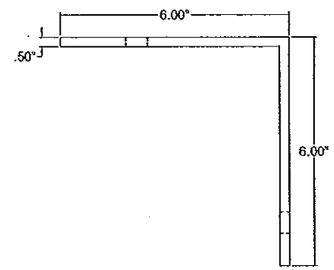

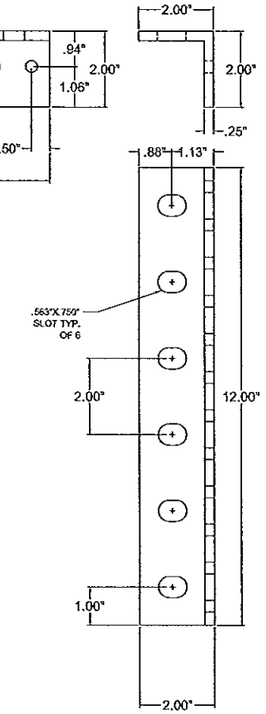

ITEM 8 - 12" CLIP @ HVBS

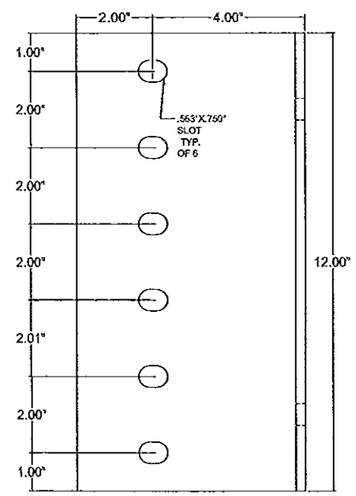

TABLE #2: DRAWING CROSS REFERENCE

ITEM	DRAWING	MATERIAL	DESCRIPTION	RUSKIN #
1	60-022207-02D	3003-H14 AL	HEAD, JAMB AND SILL FRAMES	70-020442-00B-2
2	60-022207-02D	3003-H14 AL	TOP BLADE	70-020441-00B
3	60-022207-02D	3003-H14 AL	TYPICAL BLADE	70-020443-00B
4	60-022207-02D	3003-H14 AL	SILL PIECE	70-021584-00B
5	60-022207-02D	6063-T6 AL	HVBS TEE	70-022218-00B
6	60-022207-02D	A36 STEEL	C5X6.7	-
7	60-022207-05D	6063-T6 AL	CLIP ANGLE	85-021637-00B
8	60-022207-05D	6063-T6 AL	12" CLIP @ HVBS	-
9	60-022207-05D	A36 STEEL	6" x 6" x 1/2" CLIP ANGLE	-
10	60-022207-05D	A36 STEEL	6" X 6" X 3/8" CLIP ANGLE	-

TABLE #1: APPROVED ATTACHMENTS

MIN. SUPPORT MAT'L.	TYPE CONNECTION	ANGLE SLOT WIDTH	MAX SPACING	MIN EMBEDMENT	MIN EDGE
(12 GA MIN) STEEL	1/2"Ø A307 OR 300 SS Bolts	9/16"	8" C-C MAX.	N/A	2½"
(4" MIN) CONCRETE	1/2" Ø KB -TZ	9/16"	8" C-C MAX.	2"	3"
(8" CMU) GROUT FILLED MASONRY	1/2" Ø KB - III	9/16"	8" C-C MAX.	2½"	4"
(2 - 2 X) WOOD	1/2"Ø X 3 LAG SCREW	9/16"	8" C-C MAX.	3"	2½"

NOTE: ALL FASTENERS MUST BE INSTALLED PER THE MANUFACTURER'S FLORIDA/DADE COUNTY APPROVED INSTALLATION INSTRUCTIONS

FOR OFFICE USE ONLY

PRODUCT REVISED
as complying with the Florida Building Code
Acceptance No 13-0502.05
Expiration Date 03/04/2016
By
Miami Dade Product Control

DANIEL J. RAU
LICENSE
NO. 63636
STATE OF FLORIDA
PROFESSIONAL ENGINEER

7/14/2013

ENGINEER OF RECORD:
DANIEL J. RAU
ENGINEERING DISCIPLINE:
CIVIL ENGINEER
STATE OF FLORIDA #63636

REV.	DESCRIPTION	DATE	REV'D BY	CHK'D BY	APP'D BY
B	REVISED ENGINEER OF RECORD	07/09/13	RKP	DJR	DJR

TOLERANCES UNLESS SPECIFIED OTHERWISE
3 PLACE XXX ±.010
2 PLACE XX ±.030
ANGLE DIMENSIONS ± 2°
USE WIQ-007 & 008

NOTE:
1) ALL DIMENSIONS ARE GIVEN IN INCHES.
2) ALL EXPOSED SURFACES MUST BE FREE OF DIE LINES.
3) ALUMINUM ASSOCIATION TOLERANCES APPLY UNLESS OTHERWISE SPECIFIED.
4) " EXTRUDER SPECIFIC ID MARK: .008R x .008DP

THIS INFORMATION DISCLOSED HEREIN WAS ORIGINATED BY AND IS THE PROPERTY OF RUSKIN INDUSTRIES, AND EXCEPT FOR USES EXPRESSLY GRANTED TO THE UNITED STATES GOVERNMENT, RUSKIN INDUSTRIES RESERVES ALL PATENT, PROPRIETARY, DESIGN, USE, SALE, MANUFACTURING AND REPRODUCTION RIGHTS THERETO. THIS DOES NOT APPLY TO ANY VENDOR PARTS.

CTR	CENTER	OC	ON CENTER
CL	CENTER LINE	OD	OUTSIDE DIAMETER
C-C	CENTER TO CENTER	OR	OUTSIDE RADIUS
CHAM	CHAMFER	PI	POINT OF INTERSECTION
DAT	DATUM	R	FULL RADIUS
DET	DETAIL	REF	REFERENCE
E-E	END TO END	SYM	SYMMETRICAL
EXP	EXPOSED	TAN	TANGENT
ID	INSIDE DIAMETER	TYP	TYPICAL
IR	INSIDE RADIUS		

RUSKIN
SWARTWOUT
3900 DR. GREAVES RD
GRANDVIEW, MO 64030
PH: (816) 761-7476 FAX: (816) 763-6102

AREA	EST. PER.	EST. WT/FT.
-	-	-
ALLOY & TEMPER	UNSPEC. RADII	UNSPEC. WALL
-	-	

DWN:	WJM	CHK:		APPV:	
DATE:	05/05/2011	DATE:		DATE:	

PART DESC.
ACL1245D LOUVER
PART DETAILS

SCALE: NTS | ECN: - | DATE:

DWG No. Drawing 6 of 6
60 - 022207 -05D