MIAMI-DADE COUNTY
DEPARTMENT OF REGULATORY AND ECONOMIC RESOURCES (RER)
BOARD AND CODE ADMINISTRATION DIVISION

MIAMI-DADE COUNTY
PRODUCT CONTROL SECTION
11805 SW 26 Street, Room 208
Miami, Florida 33175-2474
T (786) 315-2590 F (786) 315-2599
www.miamidade.gov/building

# NOTICE OF ACCEPTANCE (NOA)

**JC Impact Shutters & Glass, Inc.**
**9465 NW 109th Street, Suite #107**
**Medley, Florida 33029**

**SCOPE:**
This NOA is being issued under the applicable rules and regulations governing the use of construction materials. The documentation submitted has been reviewed and accepted by Miami-Dade County RER- Product Control Section to be used in Miami Dade County and other areas where allowed by the Authority Having Jurisdiction (AHJ).

This NOA shall not be valid after the expiration date stated below. The Miami-Dade County Product Control Section (In Miami Dade County) and/or the AHJ (in areas other than Miami Dade County) reserve the right to have this product or material tested for quality assurance purposes. If this product or material fails to perform in the accepted manner, the manufacturer will incur the expense of such testing and the AHJ may immediately revoke, modify, or suspend the use of such product or material within their jurisdiction. RER reserves the right to revoke this acceptance, if it is determined by Miami-Dade County Product Control Section that this product or material fails to meet the requirements of the applicable building code.

This product is approved as described herein, and has been designed to comply with the High Velocity Hurricane Zone of the Florida Building Code.

**DESCRIPTION: " Bertha HV " Aluminum Accordion Shutter System**

**APPROVAL DOCUMENT:** Drawing No.13-025, titled "Bertha HV Accordion Shutter System H.V. Blade #3 W/ or W/O H.V. Window Blade #3 ", sheets 1 through 18 of 18, and 10A of 18, prepared by Tilteco, Inc., dated 03/18/2013, signed & sealed by Walter A. Tillit Jr., P.E., bearing the Miami-Dade County Product Control Revision stamp with the Notice of Acceptance number and expiration date by Miami-Dade County Product Control Section.

**MISSILE IMPACT RATING: Large and Small Missile Impact Resistant**

**LABELING:** Each unit shall bear a permanent label with the manufacturer's name or logo, city, state, the following statement: "Miami-Dade County Product Control Approved", and NOA number, per TAS-201, TAS-202, and TAS-203, unless otherwise noted herein.

**RENEWAL** of this NOA shall be considered after a renewal application has been filed and there has been no change in the applicable building code negatively affecting the performance of this product.

**TERMINATION** of this NOA will occur after the expiration date or if there has been a revision or change in the materials, use, and/or manufacture of the product or process. Misuse of this NOA as an endorsement of any product, for sales, advertising or any other purposes shall automatically terminate this NOA. Failure to comply with any section of this NOA shall be cause for termination and removal of NOA.

**ADVERTISEMENT:** The NOA number preceded by the words Miami-Dade County, Florida, and followed by the expiration date may be displayed in advertising literature. If any portion of the NOA is displayed, then it shall be done in its entirety.

**INSPECTION:** A copy of this entire NOA shall be provided to the user by the manufacturer or its distributors and shall be available for inspection at the job site at the request of the Building Official.

This NOA **revises NOA # 12-0320.23** and consists of this page 1, evidence submitted pages E-1, E-2, & E-3 as well as approval document mentioned above.
The submitted documentation was reviewed by **Helmy A. Makar, M.S., P.E.**

MIAMI-DADE COUNTY APPROVED

05/23/2013

**NOA No. 13-0514.03**
**Expiration Date: 09/22/2016**
**Approval Date: 05/23/2013**

**JC Impact Shutters & Glass, Inc.**

## NOTICE OF ACCEPTANCE: EVIDENCE SUBMITTED

**1. EVIDENCE SUBMITTED UNDER PREVIOUS APPROVAL # 11-0823.05**

**A. DRAWINGS:**

1. *Drawing No. 11-074, titled " Bertha HV Accordion Shutter System H.V. Blade #3 W/ or W/O H.V. Window Blade #3 ", sheets 1 through 18 of 18, and 10A of 18, prepared by Tilteco, Inc., dated August 02, 2011, signed and sealed by Walter A. Tillit Jr., P.E.*

**B. TESTS**

1. *See Association's generic approval under 10-1210.*

**C. CALCULATIONS**

1. *See Association's generic approval under 10-1210.*

**D. QUALITY ASSURANCE**

1. *By Miami-Dade County Building and Neighborhood Compliance Department (BNC).*

**E. MATERIAL CERTIFICATIONS**

1. *See Association's generic approval under 10-1210.*

**F. STATEMENTS**

1. *Release letter issued by the American Shutter System Association, Inc., dated May 20, 2011, certifying this product to meet the criteria of product tested and approved, and allowing JC Impact Shutters & Glass, Inc. to use the test results approved under Miami-Dade County Approval No. 10-1210, signed by Legny Rodriguez.*
2. *Acknowledgment letter by JC Impact Shutters & Glass, Inc., dated May 23, 2011, signed by Joseph Canals Sr.*
3. *Letter by Tilteco, Inc., dated May 31, 2011, certifying that the drawing (No. 11-074) prepared for JC Impact Shutters & Glass, Inc., signed and sealed by Walter A. Tillit Jr., P.E., is engineering wise identical to American Shutter System Association generic drawing (No. 10-71).*

**2. EVIDENCE SUBMITTED UNDER PREVIOUS APPROVAL # 12-0320.23**

**A. DRAWINGS:**

1. *Drawing No.12-053, titled "Bertha HV Accordion Shutter System H.V. Blade #3 W/ or W/O H.V. Window Blade #3 ", sheets 1 through 18 of 18, and 10A of 18, prepared by Tilteco, Inc., dated 02/24/2012, signed & sealed by Walter A. Tillit Jr., P.E.,*

**Helmy A. Makar, M.S., P.E.**
**Product Control Unit Supervisor**
**NOA No. 13-0514.03**
**Expiration Date: 09/22/2016**
**Approval Date: 05/23/2013**

## NOTICE OF ACCEPTANCE: EVIDENCE SUBMITTED

**B. TESTS**

1. *See Association's generic approval under 11-1675.*

**C. CALCULATIONS**

1. *See Association's generic approval under 11-1675.*

**D. QUALITY ASSURANCE**

1. *By Miami-Dade County Department of Regulatory and Economic Resources (RER).*

**E. MATERIAL CERTIFICATIONS**

1. *See Association's generic approval under 11-1675.*

**F. STATEMENTS**

1. *Release letter issued by the American Shutter System Association, Inc., dated February 27, 2012, certifying this product to meet the criteria of product tested and approved, and allowing JC Impact Shutters & Glass, Inc. to use the test results approved under Miami-Dade County Approval No. 11-1675, signed by Legny Rodriguez.*
2. *Letter by Tilteco, Inc., dated February 27, 2012, certifying that the drawing (No. 12-053) prepared for JC Impact Shutters & Glass, Inc., signed and sealed by Walter A. Tillit Jr., P.E., is engineering wise identical to American Shutter System Association generic drawing (No. 11-112).*

**3. NEW EVIDENCE SUBMITTED**

**A. DRAWINGS:**

1. *Drawing No.13-025, titled "Bertha HV Accordion Shutter System H.V. Blade #3 W/ or W/O H.V. Window Blade #3 ", sheets 1 through 18 of 18, and 10A of 18, prepared by Tilteco, Inc., dated 03/18/2013, signed & sealed by Walter A. Tillit Jr., P.E.*

**B. TESTS**

1. *See Association's generic approval under 13-0413.*

**C. CALCULATIONS**

1. *See Association's generic approval under 13-0413.*

**Helmy A. Makar, M.S., P.E.**
**Product Control Unit Supervisor**
**NOA No. 13-0514.03**
**Expiration Date: 09/22/2016**
**Approval Date: 05/23/2013**

## NOTICE OF ACCEPTANCE: EVIDENCE SUBMITTED

**D. QUALITY ASSURANCE**

1. *By Miami-Dade County Department of Regulatory and Economic Resources (RER).*

**E. MATERIAL CERTIFICATIONS**

1. *See Association's generic approval under 13-0413.*

**F. STATEMENTS**

1. *Release letter issued by the American Shutter System Association, Inc., dated May 22, 2013, certifying this product to meet the criteria of product tested and approved, and allowing JC Impact Shutters & Glass, Inc. to use the test results approved under Miami-Dade County Approval No. 13-0413, signed by Legny Rodriguez.*
2. *Acknowledgment letter by JC Impact Shutters & Glass, Inc., dated May 22, 2013, signed by Joseph Canals Sr.*
3. *Letter by Tilteco, Inc., dated April 24, 2013, certifying that the drawing (No. 13-025) prepared for JC Impact Shutters & Glass, Inc., signed and sealed by Walter A. Tillit Jr., P.E., is engineering wise identical to American Shutter System Association generic drawing (No. 13-022).*

**Helmy A. Makar, M.S., P.E.**
**Product Control Unit Supervisor**
**NOA No. 13-0514.03**
**Expiration Date: 09/22/2016**
**Approval Date: 05/23/2013**

# GENERAL NOTES:

1. BERTHA H.V. ACCORDION SHUTTER SYSTEM SHOWN ON THIS PRODUCT APPROVAL DOCUMENT (P.A.D.) HAS BEEN VERIFIED FOR COMPLIANCE IN ACCORDANCE WITH THE 2010 EDITION OF THE FLORIDA BUILDING CODE. THIS ACCORDION SHUTTER SYSTEM MAY BE INSTALLED AT HIGH VELOCITY HURRICANE ZONES (MIAMI DADE/BROWARD COUNTIES).
   DESIGN WIND LOADS SHALL BE DETERMINED AS PER SECTION 1620 OF THE ABOVE MENTIONED CODE, USING ASCE 7-10 AND SHALL NOT EXCEED THE MAXIMUM (A.S.D.) DESIGN PRESSURE RATINGS INDICATED ON SHEET 5.
   **IN ORDER TO VERIFY THE ABOVE CONDITION, ULTIMATE DESIGN WIND LOADS DETERMINED PER ASCE 7-10 SHALL BE FIRST REDUCED TO A.S.D. DESIGN WIND LOADS BY MULTIPLYING THEM BY 0.6 IN ORDER TO COMPARE THESE W/ MAX. (A.S.D) DESIGN PRESSURE RATINGS INDICATED ON SHEET 5.**
   IN ORDER TO VERIFY THAT ANCHORS ON THIS P.A.D., AS TESTED, WERE NOT OVER STRESSED, A 33% INCREASE IN ALLOWABLE STRESS FOR WIND LOADS WAS **NOT** USED IN THEIR ANALYSIS.
   BERTHA H.V. ACCORDION SHUTTER SYSTEM'S ADEQUACY FOR WIND AND LARGE MISSILE IMPACT LOAD HAS BEEN VERIFIED IN ACCORDANCE WITH SECTION **1626** OF THE ABOVE MENTIONED CODE AS PER ATL REPORTS:

   – ①H.V. BLADE #3 #0403.01-08, 0825.01-10 (ADDENDUM TO 0403.01-08), 1220.01-10 AND 1209.01-10, AS PER PROTOCOLS TAS 201, 202 & 203.

   – ①H.V. BLADE #3 WORKING IN UNISON WITH Ⓐ H.V. WINDOW BLADE #3 #0829.01-08 AS PER PROTOCOLS TAS-201, TAS 202 & TAS-203.

   ①H.V. BLADE #3 AND Ⓐ H.V. WINDOW BLADE #3 ARE ENGINEERED TO WORK IN UNISON WITH EACH OTHER UNDER THE GENERAL LIMITATIONS AND CONDITIONS OF USE INDICATED ON SHEET 18.

2. BERTHA H.V. ACCORDION PINS (HV SCREWS), USED AT BLADES KNUCKLE SHALL BE #10 X 2 3/4". BERTHA H.V. ACCORDION PINS USED AT HV CENTERMATE SHALL BE #14 X 2 3/4". BERTHA H.V. ACCORDION PINS USED AT HV DIRECT MOUNT SHALL BE #14 X 1 3/4", 410-HT MINIMUM SERIES STAINLESS STEEL SCREWS WITH 135.0 KSI YIELD STRENGTH AND 180 KSI TENSILE STRENGTH. PINS SHALL BE COATED WITH BERTHA HV DACROSHIELDÒ COATING SYSTEM AS MANUFACTURED BY APPROVED COATING APPLICATORS, REGISTERED WITH AMERICAN SHUTTER SYSTEMS ASSOCIATION. PINS MUST BEAR THE HV MARKING ON THEIR HEAD.

3. ALL ALUMINUM EXTRUSIONS SHALL BE ALUMINUM ASSOCIATION 6063-T6 ALLOY AND TEMPER, WITH Fy = 27.1 ksi MINIMUM (UNLESS OTHERWISE NOTED).

4. ALL SCREWS TO BE STAINLESS STEEL 304 OR 316 AISI SERIES OR CORROSION RESISTANT COATED CARBON STEEL AS PER DIN 50018 AND SECTION 2411.3.3.4 OF THE FLORIDA BUILDING CODE WITH 50 ksi YIELD STRENGTH AND 90 ksi TENSILE STRENGTH.

5. BOLTS TO BE ASTM A-307 GALVANIZED STEEL, OR AISI 304 SERIES STAINLESS STEEL WITH 35 ksi MINIMUM YIELD STRENGTH.

6. SEE SHEETS 6 & 8 FOR ANCHORS SPECIFICATIONS ON DIFFERENT SUBSTRATES.

7. THIS BERTHA H.V. ACCORDION SHUTTER SYSTEM BEARS A U.S. PATENT #6779582. COMPONENTS OF THIS APPROVAL ARE COVERED, IN WHOLE OR IN PART BY U.S. PATENT #5458179 ISSUED TO EASTERN METAL SUPPLY, INC.

8. IT SHALL BE THE RESPONSIBILITY OF THE CONTRACTOR TO VERIFY THE SOUNDNESS OF THE STRUCTURE WHERE SHUTTER IS TO BE ATTACHED TO INSURE PROPER ANCHORAGE. CONTRACTOR TO SEAL/CAULK ALL SHUTTER COMPONENT EDGES WHICH REMAIN, THRU FASTENING IN CONTINUOUS CONTACT WITH THE BUILDING TO PREVENT WIND/RAIN INTRUSION.

9. EACH UNIT MUST BEAR PERMANENT LABEL IN A VISIBLE PLACE WITH WARNING NOTE: DURING PERIODS OF HURRICANE WARNINGS HOME OWNER, TENANT, OR OTHERS, MUST PROPERLY CLOSE ALL CENTERMATES AND ENGAGE OR LOCK ALL LOCKS.

10. BERTHA H.V. ACCORDION SHUTTER SYSTEM'S INSTALLATION SHALL COMPLY WITH SPECS INDICATED IN THIS DRAWING PLUS ANY BUILDING AND ZONING REGULATIONS PROVIDED BY THE JURISDICTION WHERE PERMIT IS APPLIED TO.

11. (a) THIS P.A.D. PREPARED BY THIS ENGINEER IS GENERIC AND DOES NOT PROVIDE INFORMATION FOR A SITE SPECIFIC PROJECT; i.e. WHERE THE SITE CONDITIONS DEVIATE FROM THE P.A.D.

    (b) CONTRACTOR TO BE RESPONSIBLE FOR THE SELECTION, PURCHASE AND INSTALLATION INCLUDING LIFE SAFETY OF THIS PRODUCT, BASED ON THIS P.A.D., PROVIDED HE/SHE DOES NOT DEVIATE FROM THE CONDITIONS DETAILED ON THIS DOCUMENT. CONSTRUCTION SAFETY AT SITE IS THE CONTRACTOR'S RESPONSIBILITY.

    (c) THIS P.A.D. WILL BE CONSIDERED INVALID IF ALTERED BY ANY MEANS.

    (d) SITE SPECIFIC PROJECTS SHALL BE PREPARED BY A FLORIDA REGISTERED ENGINEER OR ARCHITECT WHICH WILL BECOME THE ENGINEER OF RECORD (E.O.R.) FOR THE PROJECT AND WHO WILL BE RESPONSIBLE FOR THE PROPER USE OF THE P.A.D. ENGINEER OF RECORD, ACTING AS A DELEGATED ENGINEER TO THE P.A.D. ENGINEER SHALL SUBMIT TO THIS LATTER THE SITE SPECIFIC DRAWINGS FOR REVIEW.

    (e) THIS P.A.D. SHALL BEAR THE DATE AND ORIGINAL SEAL AND SIGNATURE OF THE PROFESSIONAL ENGINEER OF RECORD THAT PREPARED IT.

12. A PERMANENT SHUTTER MANUFACTURER'S LABEL SHALL BE PLACED ON THE EXPOSED SURFACE OF THE SIDE RAIL APPROXIMATELY 4" BELOW THE TOP OF SUCH RAIL LABEL SHALL READ AS FOLLOWS:
    **JC IMPACT SHUTTERS & GLASS, INC.**
    MEDLEY, FL.
    MIAMI – DADE COUNTY PRODUCT CONTROL APPROVED.

# TABLE OF CONTENTS


## AREA 1: HV BLADES ① & ⑩A

| | | |
|---|---|---|
| GENERAL NOTES. | | SHEET 1 |
| SYSTEM COMPONENTS. | 1-21 | SHEET 2 |
| SYSTEM COMPONENTS & TYPICAL SHUTTER ASSEMBLY. | 21-33A | SHEET 3 |

## AREA 2: HV BLADE ① AND HV WINDOW BLADE ⑩A (WHERE APPLICABLE)

| | |
|---|---|
| TYPICAL SHUTTER ELEVATION & NOTES ON LOCKS. | SHEET 4 |
| MAXIMUM SPAN TABLES. | SHEET 5 |
| ANCHOR SCHEDULE- CONCRETE | SHEET 6 |
| ANCHOR SCHEDULE- CONCRETE & BLOCK. | SHEET 7 |
| ANCHOR SCHEDULE- WOOD | SHEET 8 |
| INSTALLATION DETAILS 1-6 -CONCRETE & BLOCK | SHEET 9 |
| INSTALLATION DETAILS 7-9 -CONCRETE & BLOCK | SHEET 10 |
| INSTALLATION DETAIL 10 -METAL STUD | SHEET 10A |
| INST. DETAILS W/ HV CENTERMATES ⑬ & ⑭ | SHEET 11 |
| INST. DETAILS W/ HV "T" LOCK CENTERMATES ⑱ & ⑲ | SHEET 12 |
| INST. DETAILS W/ HD CENTERMATES ㉒, ㉓ & ㉔ | SHEET 12 |
| END CONNECTION DETAILS 1-6-CONCRETE & BLOCK | SHEET 13 |
| INSTALLATION DETAILS 1W-6W -WOOD | SHEET 14 |
| INSTALLATION DETAILS 7W-10W -WOOD | SHEET 15 |
| END CONNECTION DETAILS 1-6-WOOD | SHEET 16 |

## AREA 3: HV WINDOW BLADE ⑩A ONLY

| | |
|---|---|
| TYPICAL WINDOW BLADE & WINDOW DETAIL | SHEET 17 |
| TYPICAL SHUTTER ELEVATION | SHEET 18 |


FLORIDA BUILDING CODE (**H**igh **V**elocity **H**urricane **Z**one)

PRODUCT REVISED
as complying with the Florida Building Code
Acceptance No 13-0514.03
Expiration Date 09/22/2016
By
Miami Dade Product Control

MIAMI-DADE COUNTY

WALTER A. TILLIT JR. LICENSE No. 44167 STATE OF FLORIDA PROFESSIONAL ENGINEER
4/12/13

P.E. SEAL/SIGNATURE/DATE


TILTECO INC.
TILLIT TESTING & ENGINEERING COMPANY
6355 N.W. 36th. St., Ste. 305, VIRGINIA GARDENS, FLORIDA 33166
Phone : (305)871-1530 . Fax : (305)871-1531
e-mail: tilteco@aol.com
EB-0006719
WALTER A. TILLIT Jr. P.E.
FLORIDA Lic. # 44167

**JC IMPACT SHUTTERS & GLASS, INC.**
(ASSA # 43)
9465 N.W. 109 STREET, # 107
MEDLEY, FL 33178
PH: (305) 863-2727, FAX: (305) 889-1983


© 2013 EASTERN METAL SUPPLY, INC.

**BERTHA HV™**
Accordion Shutter System
H.V. BLADE #3 W/ OR W/O H.V. WINDOW BLADE #3

| REV. No | DESCRIPTION | DATE | DRAWN BY: A.G. |
|---|---|---|---|
| 1 | OLD 12-053 | 03/18/13 | DATE: 03/18/13 |
| 2 | NOTE 3 | 03/18/13 | DRAWING No 13-025 |
| 3 | | | |
| 4 | | | |
| 5 | | | SHEET 1 OF 18 |
| 6 | | | |

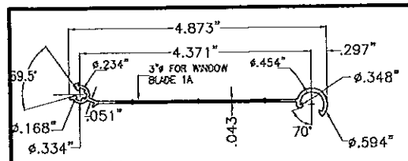


1 **HV BLADE #3**

1A **HV WINDOW BLADE #3 ***

* SEE LIMITATIONS OF USE FOR BLADE 1A ON SHEET 18

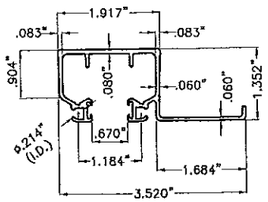


2 **HV HEADER**
QUALIFIED FOR USE W/ HV BLADES 1, 1A

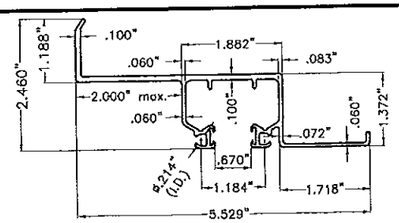


3 **HV B.O. TRACK**
QUALIFIED FOR USE W/ HV BLADES 1, 1A

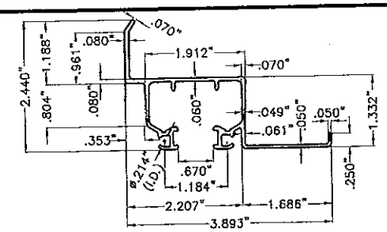


4 **HV HEADER/SILL**
QUALIFIED FOR USE W/ HV BLADES 1, 1A

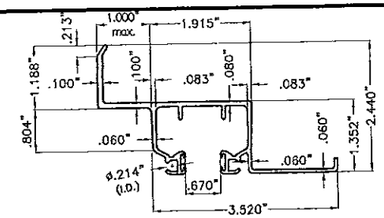


4A **HV 1" B.O. HEADER/SILL**
QUALIFIED FOR USE W/ HV BLADE 1

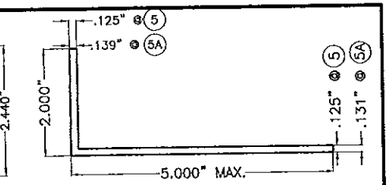


5, 5A **ALUMINUM ANGLES**
QUALIFIED FOR USE W/ HV BLADE 1

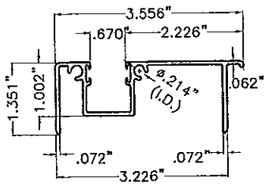


6 **HV ADJ. FLOOR TRACK**
QUALIFIED FOR USE W/ HV BLADES 1, 1A

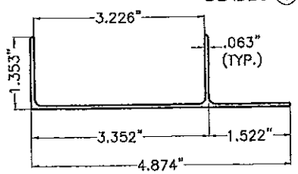


7 **HV ADJ. ADAPTER W/ LIP**
QUALIFIED FOR USE W/ HV BLADES 1, 1A

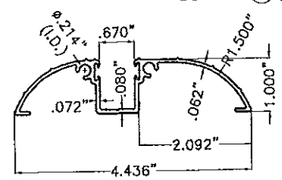


8 **HV WALK-OVER TRACK**
QUALIFIED FOR USE W/ HV BLADE 1

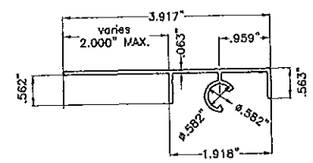


9 **HV DIRECT MOUNT**
QUALIFIED FOR USE W/ HV BLADES 1, 1A

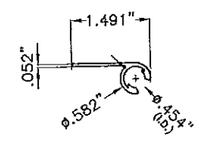


10 **HV 90°/180° STARTER**
QUALIFIED FOR USE W/ HV BLADES 1, 1A

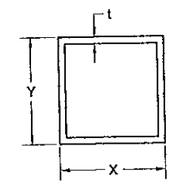


| X | Y | t |
|---|---|---|
| 2" | 2" | 0.125" |
| 3" | 3" | 0.090" |

11 **CORNER POSTS**
QUALIFIED FOR USE W/ HV BLADES 1, 1A

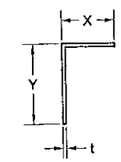


| MIN. X | MIN. Y | MIN. t |
|---|---|---|
| 1" | 1" | 0.062" |

12 **SIDE ANGLES**
QUALIFIED FOR USE W/ HV BLADES 1, 1A

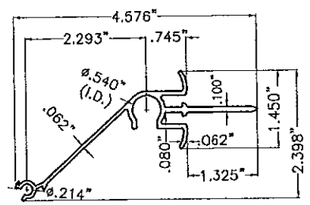


13 **HV CENTERMATE**
QUALIFIED FOR USE W/ HV BLADES 1, 1A

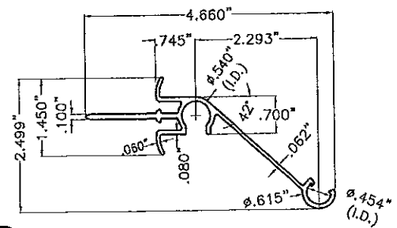


14 **HV FLOATING CENTERMATE**
QUALIFIED FOR USE W/ HV BLADES 1, 1A

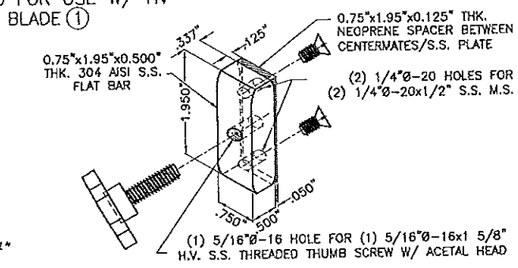


15 **S.S. SALT WATER LOCK**
QUALIFIED FOR USE W/ HV BLADE 1

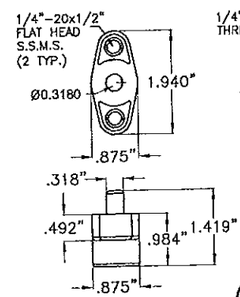


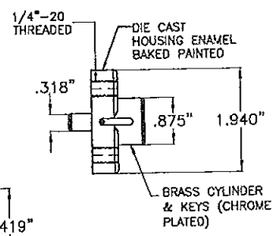


16 **H.V. LOCK**
QUALIFIED FOR USE W/ HV BLADES 1, 1A

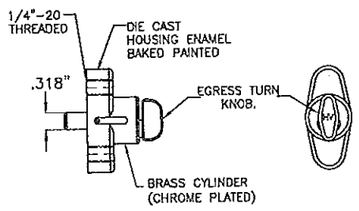


17 **H.V. EGRESS LOCK**
QUALIFIED FOR USE W/ HV BLADES 1, 1A

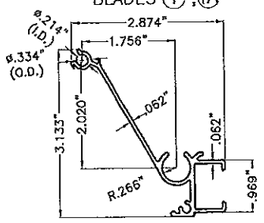


18 **HV MALE "T" LOCK CENTERMATE**
QUALIFIED FOR USE W/ HV BLADE 1

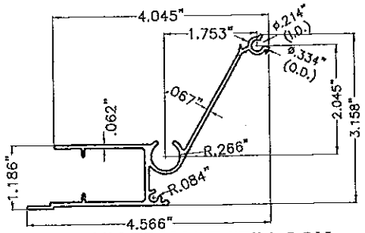


19 **HV FEMALE "T" LOCK CENTERMATE**
QUALIFIED FOR USE W/ HV BLADE 1

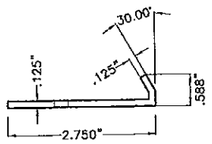


PLAN

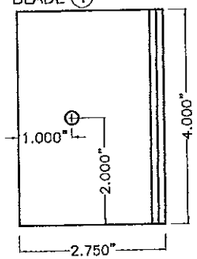


FRONT ELEVATION

20 **"J" CLIP FOR "T" LOCK CENTERMATE**
QUALIFIED FOR USE W/ HV BLADE 1

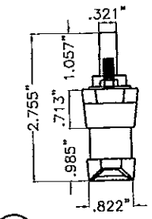


21 **HV "T" LOCK**
QUALIFIED FOR USE W/ HV BLADE 1

## COMPONENTS

6063-T6 ALLOY AND TEMPER
SCALE 3/8"=1"

FLORIDA BUILDING CODE (**H**igh **V**elocity **H**urricane **Z**one)

PRODUCT REVISED
as complying with the Florida Building Code
Acceptance No 13-0514.03
Expiration Date 09/22/2016
By
Miami Dade Product Control

MIAMI-DADE COUNTY

WALTER A. TILLIT JR. LICENSE No. 44167 STATE OF FLORIDA PROFESSIONAL ENGINEER

P.E. SEAL/SIGNATURE/DATE


TILTECO INC.
TILLIT TESTING & ENGINEERING COMPANY
6355 N.W. 36th. St., Ste. 305, VIRGINIA GARDENS, FLORIDA 33166
Phone : (305)871-1530 . Fax : (305)871-1531
e-mail: tilteco@aol.com
EB-0006719
WALTER A. TILLIT Jr. P.E.
FLORIDA Lic. # 44167


**JC IMPACT SHUTTERS & GLASS, INC.**
(ASSA # 43)
9465 N.W. 109 STREET, # 107
MEDLEY, FL 33178
PH: (305) 863-2727, FAX: (305) 889-1983

© 2013 EASTERN METAL SUPPLY, INC.

**BERTHA HV** TM
Accordion Shutter System
H.V. BLADE #3 W/ OR W/O H.V. WINDOW BLADE #3

| REV. No | DESCRIPTION | DATE | DRAWN BY: A.G. |
|---|---|---|---|
| 1 | OLD 12-053 | 03/18/13 | DATE: 03/18/13 |
| 2 | | | DRAWING No |
| 3 | | | 13-025 |
| 4 | | | |
| 5 | | | SHEET |
| 6 | | | 2 OF 18 |

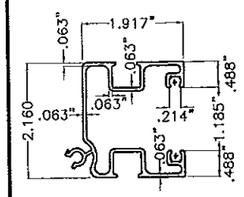


**(22) HD CENTERMATE W/ LOCKING ROD**

QUALIFIED FOR USE W/ HV BLADE (1)

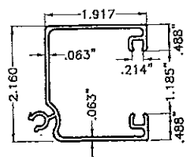


**(23) HD CENTERMATE W/ NO LOCKING ROD**

QUALIFIED FOR USE W/ HV BLADE (1)

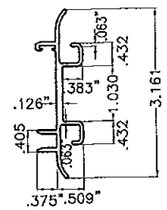


**(24) HD CENTERMATE'S INSERT**

QUALIFIED FOR USE W/ HV BLADE (1)

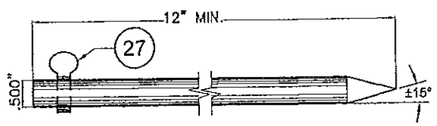


**(26) 12" LOCKING ROD**

QUALIFIED FOR USE W/ HV BLADE (1) △

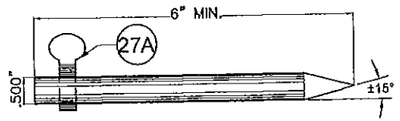


**(26A) 6" LOCKING ROD**

QUALIFIED FOR USE W/ HV BLADE (1) △

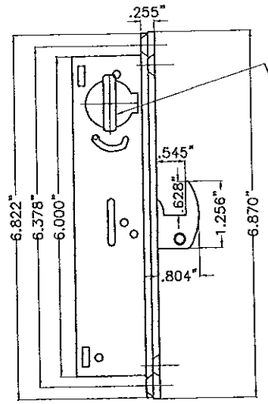


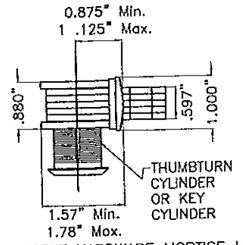


**(25) HD LOCK** BY REGENT HARDWARE MORTISE LOCKS SERIES 2333 HOOK BOLT LOCK.

QUALIFIED FOR USE W/ HV BLADE (1)

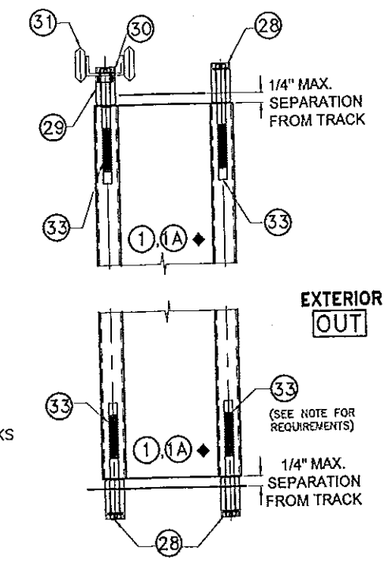


## TYPICAL SHUTTER ASSEMBLY

SCALE: 1/4" = 1"

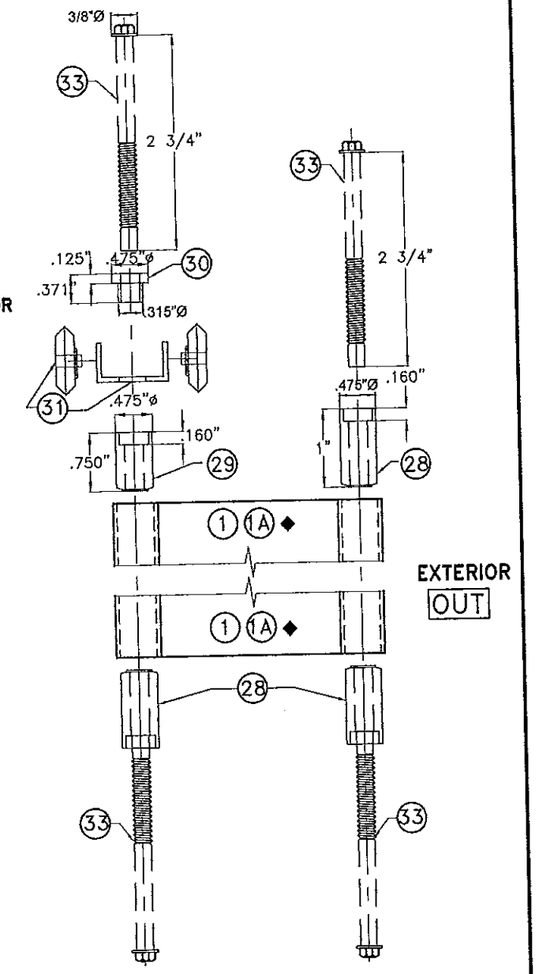


**ASSEMBLY LAYOUT**

N.T.S.

◆ SEE LIMITATIONS OF USE FOR BLADE (1A) ON SHEET 18.

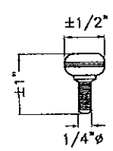


**(27) HV 1/4" Ø-20 AISI 304 SERIES S.S. THUMBSCREWS**

QUALIFIED FOR USE W/ HV BLADE (1)

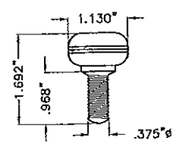


**(27A) HV 3/8" Ø-16 ACETAL THUMBSCREWS**

QUALIFIED FOR USE W/ HV BLADE (1)

△ (26), (26A) INSTALLATION WILL REQUIRE A 7/16" HOLE DRILLED AT TRACKS FOR PROPER EMBEDMENT

## COMPONENTS (CONTINUED)

6063-T6 ALLOY AND TEMPER

SCALE 3/8"=1"

| SHUTTER ASSEMBLY SCHEDULE FOR HV BLADE #3 AND HV WINDOW BLADE #3 | |
|---|---|
| (1) | HV BLADE #3 |
| (1A) | HV WINDOW BLADE #3 |
| (28) | HV LONG RECESSED NYLON BUSHING |
| (29) | HV SHORT RECESSED NYLON BUSHING |
| (30) | HV NYLON HAT WASHER |
| (31) | HV WHEEL CARRIAGE AISI 302-303 SERIES ø.870"x3/16" THICK NYLON WHEEL. 0.188"ø AISI 302 SERIES S.S. RIVETS |
| (32) | H.V. # 14 x 1 3/4" ACCORDION H.V. DIRECT MOUNT PIN W/ #8 HEAD * |
| (33) | H.V. # 10 x 2 3/4" ACCORDION H.V. BLADE PIN W/ #8 HEAD * |
| (33A) | H.V. # 14 x 2 3/4" ACCORDION H.V. CENTERMATE PIN W/ #8 HEAD * |

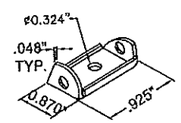


**WHEEL CARRIAGE DETAIL**

N.T.S.

*** HV PIN REQUIREMENTS FOR (1) HV BLADE #3 & (1A) HV WINDOW BLADE #3.**

(1) HV PIN (33) SHALL ALWAYS BE USED AT ALL EXTERIOR AND INTERIOR TOP AND BOTTOM KNUCKLES OF HV ACCORDION SYSTEM W/ (1) HV BLADE #3 & (1A) HV WINDOW BLADE #3.

(2) HV PIN (32) W/ 1/2" O.D. 1/16" THICK S.S. WASHER SHALL BE USED FOR DIRECT MOUNT INSTALLATION PER DETAIL X, SHEETS 13 & 16.

(3) HV PIN (33A) SHALL ALWAYS BE USED AT H.V., H.V. "T" LOCK AND H.D. CENTERMATES.

FLORIDA BUILDING CODE (**H**igh **V**elocity **H**urricane **Z**one)

© 2013 EASTERN METAL SUPPLY, INC.

PRODUCT REVISED
as complying with the Florida Building Code
Acceptance No 13-0514.03
Expiration Date 09/22/2016
By
Miami Dade Product Control

MIAMI-DADE COUNTY

WALTER A. TILLIT JR. LICENSE No. 44167 STATE OF FLORIDA PROFESSIONAL ENGINEER

P.E. SEAL/SIGNATURE/DATE

TILTECO INC.
TILLIT TESTING & ENGINEERING COMPANY
6355 N.W. 36th. St., Ste. 305, VIRGINIA GARDENS, FLORIDA 33166
Phone : (305)871-1530 . Fax : (305)871-1531
e-mail: tilteco@aol.com
EB-0006719
WALTER A. TILLIT Jr. P.E.
FLORIDA Lic. # 44167

**JC IMPACT SHUTTERS & GLASS, INC.**
(ASSA # 43)
9465 N.W. 109 STREET, # 107
MEDLEY, FL 33178
PH: (305) 863-2727, FAX: (305) 889-1983

**BERTHA HV** TM

Accordion Shutter System

H.V. BLADE #3 W/ OR W/O H.V. WINDOW BLADE #3

| REV. No | DESCRIPTION | DATE | DRAWN BY: A.G. |
|---|---|---|---|
| 1 | OLD 12-053 | 03/18/13 | DATE: 03/18/13 |
| 2 | | | DRAWING No 13-025 |
| 3 | | | |
| 4 | | | |
| 5 | | | SHEET 3 OF 18 |
| 6 | | | |

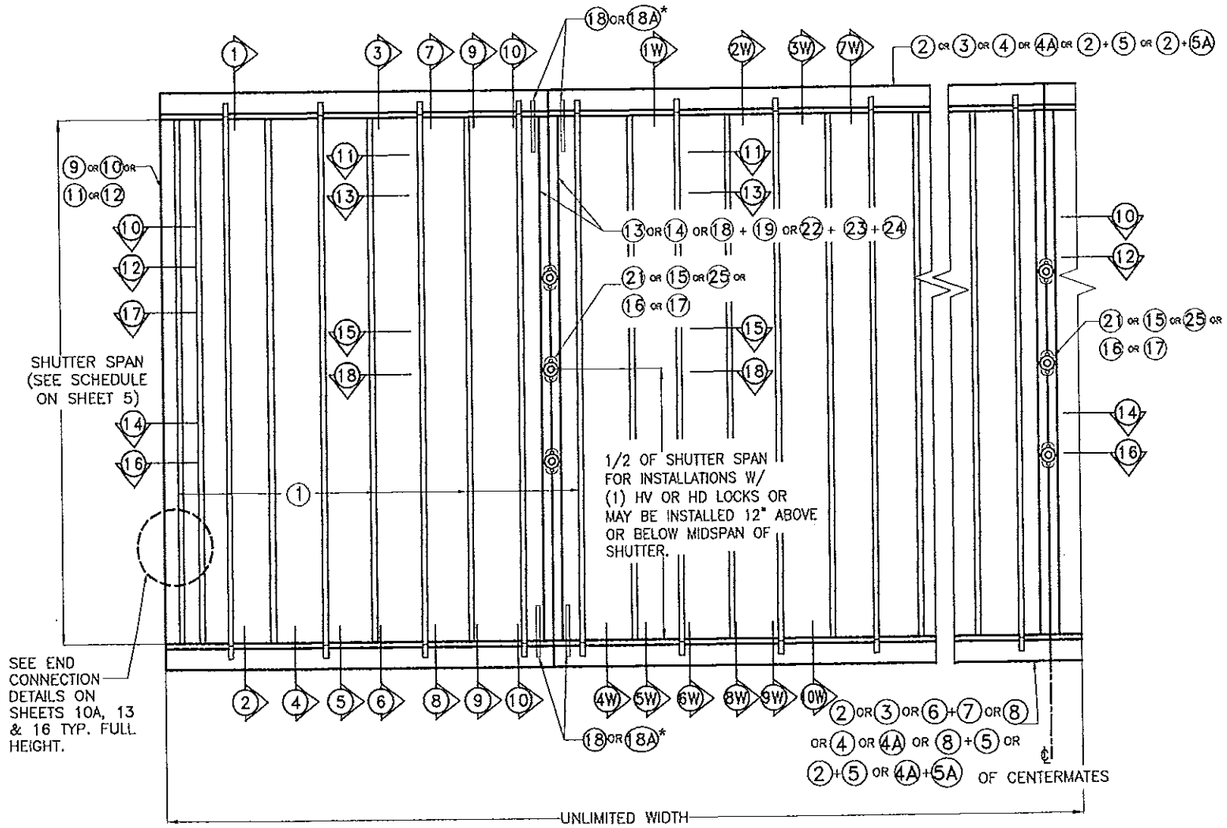


## TYPICAL (1) H.V. BLADE #3 SHUTTER ELEVATION

N.T.S.

SEE LIMITATIONS OF USE FOR BLADE (1A) ON SHEET 18.

# NOTES ON HV, HV "T" AND HD LOCKS AND CENTERMATES: VALID ONLY FOR INSTALLATIONS W/ HV (1) BLADE

## * APPLICATION W/ HV LOCKS AND CENTERMATES:

1. **MANDATORY CONDITION #1:** ONE HV LOCK (15) or (16) or (17) SHALL BE USED AT 1/2 OF SHUTTER SPAN FOR ANY SPAN OR 12" ABOVE OR BELOW 1/2 OF SHUTTER SPAN FOR SPANS UP TO 156", AND FOR INSTALLATIONS AT ANY ELEVATION EXCEPT FOR INSTALLATIONS INTO METAL STUDS. HV LOCK (15) or (16) or (17) MAY BE USED AS AN INSIDE OR OUTSIDE LOCK, ATTACHED TO (13) or (14) CENTERMATES W/ (2) 1/4"-20 x 1/2" LONG FLAT HEAD S.S. M.S. LOCATION OF LOCK SHALL BE AS INDICATED ON TYPICAL SHUTTER ELEVATION. USE OF LOCKING RODS (26) W/ (27) AND (27A) IS COMPLETELY OPTIONAL.

2. **MANDATORY CONDITION #2 FOR INSTALLATIONS INTO METAL STUDS:** ONE HV LOCK (15) or (16) or (17) SHALL BE USED AT 1/2 OF SHUTTER SPAN FOR ANY SPAN OR 12" ABOVE OR BELOW 1/2 OF SHUTTER SPAN FOR SPANS UP TO 84", AND FOR INSTALLATIONS AT ANY ELEVATION. HV LOCK (15) or (16) or (17) MAY BE USED AS AN INSIDE OR OUTSIDE LOCK, ATTACHED TO (13) or (14) CENTERMATES W/ (2) 1/4"-20 x 1/2" LONG FLAT HEAD S.S. M.S. LOCATION OF LOCK SHALL BE AS INDICATED ON TYPICAL SHUTTER ELEVATION. USE OF LOCKING RODS (26A) W/ (27) OR (27A) BOTTOM IS COMPLETELY MANDATORY.

3. **MANDATORY CONDITION #3 FOR KEYSTONE MOUNTING INSTALLATIONS:** ONE HV LOCK (15) or (16) or (17) SHALL BE USED AT 1/2 OF SHUTTER SPAN FOR ANY SPAN OR 12" ABOVE OR BELOW 1/2 OF SHUTTER SPAN FOR SPANS UP TO 96", AND FOR INSTALLATIONS AT ANY ELEVATION. HV LOCK (15) or (16) or (17) MAY BE USED AS AN INSIDE OR OUTSIDE LOCK, ATTACHED TO (13) or (14) SYMMETRICAL CENTERMATES W/ (2) 1/4"-20 x 1/2" LONG FLAT HEAD S.S. M.S. LOCATION OF LOCK SHALL BE AS INDICATED ON TYPICAL SHUTTER ELEVATION. USE OF LOCKING RODS (26A) W/ (27) OR (27A) TOP AND BOTTOM IS COMPLETELY MANDATORY.

4. **OPTIONAL CONDITION #1:** IF DESIRED, FOR BETTER PERFORMANCE OR FOR SECURITY PURPOSES, UP TO TWO HV LOCKS (16), (17) OR (15) MAY BE USED AS AN INSIDE OR OUTSIDE LOCK. CONNECTION OF LOCKS TO CENTERMATES (13) OR (14) SHALL BE AS INDICATED ON NOTE (1) ABOVE.
LOCATION OF LOCKS SHALL BE AS INDICATED ON TYPICAL SHUTTER ELEVATION.

## * APPLICATION W/ HV "T" LOCKS AND CENTERMATES:

1. **SECOND ALTERNATE TO MANDATORY CONDITION #1 VALID ONLY FOR HV "T" LOCK (21), AND CENTERMATES (18) AND (19):**
ONE ALTERNATE HV "T" LOCK (21) MAY BE INSTALLED IN LIEU OF OTHER LOCKS FOR ANY SPAN AND INSTALLATION AT ANY ELEVATION. ALTERNATE LOCK (21) MAY BE USED AS AN INSIDE OR OUTSIDE LOCK. ATTACHMENT OF LOCK (21) INCLUDES USING "J" CLIP (20), AS SHOWN ON SECTION 15, SHEET 12, WHICH MUST BE CONNECTED TO CENTERMATES (18) AND (19) W/ 1/4" ø-20x1" S.S.M.S. INTO A 1/4"ø x 5/8" RIVNUT. LOCK MAY BE INSTALLED AT MIDSPAN OR 12" MAXIMUM ABOVE AND BELOW MIDSPAN. USE OF TWO LOCKING RODS (26) or (26A) TOP AND BOTTOM IS MANDATORY.

## * APPLICATION W/ HD LOCKS & CENTERMATES:

1. **THIRD ALTERNATE TO MANDATORY CONDITION # 1 VALID FOR HD LOCK (25) W/ (2) HD CENTERMATES (22) OR (23) OR (22) + (23) W/ (24):**
ONE ALTERNATE HD LOCK (25) MAYBE USED IN LIEU OF OTHER LOCKS FOR ANY SPAN AND INSTALLATIONS AT ANY ELEVATION. ALTERNATE HD LOCK (25) MAY BE USED AS AN INSIDE OR OUTSIDE LOCK. ATTACHMENT OF HD LOCK (25) TO (24) IS W/ (3) #8 x 3/8" F.H. S.S.M.S., AND INCLUDES REINFORCEMENT INSERT (24) AS SHOWN ON SECTION 18, SHEET 12. LOCK MAY BE INSTALLED AT MIDSPAN OR 12" MAXIMUM BELOW OR ABOVE MIDSPAN. USE OF LOCKING RODS (26) or (26A) IS COMPLETELY OPTIONAL.

FLORIDA BUILDING CODE (**H**igh **V**elocity **H**urricane **Z**one)

PRODUCT REVISED
as complying with the Florida Building Code
Acceptance No 13-0514.03
Expiration Date 09/22/2016
By
Miami Dade Product Control

MIAMI-DADE COUNTY

WALTER A. TILLIT JR. LICENSE No. 44167 STATE OF FLORIDA PROFESSIONAL ENGINEER

P.E. SEAL/SIGNATURE/DATE

TILTECO INC.
TILLIT TESTING & ENGINEERING COMPANY
8355 N.W. 36th. St., Ste. 305, VIRGINIA GARDENS, FLORIDA 33166
Phone : (305)871-1530 . Fax : (305)871-1531
e-mail: tilteco@aol.com
EB-0006719
WALTER A. TILLIT Jr. P.E.
FLORIDA Lic. # 44167

**JC IMPACT SHUTTERS & GLASS, INC.**
(ASSA # 43)
9465 N.W. 109 STREET, # 107
MEDLEY, FL 33178
PH: (305) 863-2727, FAX: (305) 889-1983

© 2013 EASTERN METAL SUPPLY, INC.

**BERTHA HV™**
Accordion Shutter System
H.V. BLADE #3 W/ OR W/O H.V. WINDOW BLADE #3

| REV. No | DESCRIPTION | DATE | DRAWN BY: A.G. |
|---|---|---|---|
| 1 | OLD 12-053 | 03/18/13 | DATE: 03/18/13 |
| 2 | | | DRAWING No 13-025 |
| 3 | | | |
| 4 | | | |
| 5 | | | SHEET 4 OF 18 |
| 6 | | | |

## MAXIMUM SHUTTER SPAN "L+" OR "L−"* (ft.) FOR INSTALLATIONS W/ ① HV BLADE. Δ

| MAXIMUM A.S.D. PRESSURE RATING (psf) (+ or -) | POURED CONCRETE, CONCRETE BLOCK AND WOOD INSTALLATIONS ♣ † | | | | | |
|---|---|---|---|---|---|---|
| | WALL MOUNTING | | FLOOR/CEILING MOUNTING | | MIN. SEPARATION TO GLASS | |
| | L+ (FT) | L- (FT) | L+ (FT) | L- (FT) | KNUCKLE | LOCK / CENTERMATE |
| 35 | 12 '- 7 " | 13 '- 0 " | 12 '- 7 " | 13 '- 0 " | 3 3/4 " | 4 3/8 " |
| 40 | 11 '- 10 " | 12 '- 3 " | 11 '- 10 " | 12 '- 3 " | 3 3/4 " | 4 3/8 " |
| 45 | 11 '- 9 " | 11 '- 11 " | 11 '- 9 " | 11 '- 11 " | 3 3/4 " | 4 3/8 " |
| 50 | 11 '- 5 " | 11 '- 6 " | 11 '- 5 " | 11 '- 6 " | 3 3/4 " | 4 3/8 " |
| 55 | 11 '- 4 " | 11 '- 4 " | 11 '- 4 " | 11 '- 4 " | 3 3/4 " | 4 3/8 " |
| 60 | 10 '- 6 " | 10 '- 6 " | 10 '- 6 " | 10 '- 6 " | 3 3/4 " | 4 3/8 " |
| 65 | 8 '- 8 " | 8 '- 8 " | 8 '- 8 " | 8 '- 8 " | 3 3/4 " | 4 3/8 " |
| 70 | 8 '- 3 " | 8 '- 3 " | 8 '- 3 " | 8 '- 3 " | 2 7/8 " | 4 1/8 " |
| 75 | 7 '- 9 " | 7 '- 9 " | 7 '- 9 " | 7 '- 9 " | 2 7/8 " | 4 1/8 " |
| 80 | 7 '- 3 " | 7 '- 3 " | 7 '- 3 " | 7 '- 3 " | 2 7/8 " | 4 1/8 " |
| 85 | 6 '- 10 " | 6 '- 10 " | 6 '- 10 " | 6 '- 10 " | 2 7/8 " | 4 1/8 " |
| 90 | 5 '- 7 " | 5 '- 7 " | 5 '- 7 " | 5 '- 7 " | 2 7/8 " | 4 1/8 " |
| 95 | 5 '- 6 " | 5 '- 6 " | 5 '- 6 " | 5 '- 6 " | 2 7/8 " | 4 1/8 " |
| 100 | 5 '- 5 " | 5 '- 5 " | 5 '- 5 " | 5 '- 5 " | 2 7/8 " | 4 1/8 " |
| 105 | 5 '- 3 " | 5 '- 3 " | 5 '- 3 " | 5 '- 3 " | 2 7/8 " | 4 1/8 " |
| 110 | 5 '- 2 " | 5 '- 2 " | 5 '- 2 " | 5 '- 2 " | 3 " | 2 3/4 " |

♣ EXCEPT THAT MAXIMUM SHUTTER SPAN "L+" OR "L−" AND MAXIMUM PRESSURE RATING FOR INSTALLATIONS INTO WOOD SHALL BE LIMITED AS FOLLOWS:
1− CONNECTIONS TO PLYWOOD LIMITED TO ±62 p.s.f. A.S.D. PRESSURE RATING AND 8'−11" SPAN, SEE SECTION 5W ON SHEET 14.
2− CONNECTIONS TO HOLLOW CEILING LIMITED TO ±62 p.s.f. A.S.D. PRESSURE RATING AND 8'−0" SPAN, SEE SECTION 2W ON SHEET 14.

† EXCEPT THAT MAXIMUM SHUTTER SPAN "L+" OR "L−" AND MAXIMUM PRESSURE RATING FOR INSTALLATIONS INTO CONCRETE OR CONCRETE BLOCK SHALL BE LIMITED AS FOLLOWS:
1− CONNECTIONS TO KEYSTONE MOUNTING LIMITED TO +64,−72 p.s.f. A.S.D. PRESSURE RATING AND 7'−6" SPAN, SEE SECTION 9 ON SHEET 10.

## MAXIMUM SHUTTER SPAN "L+" OR "L−"* (ft.) FOR INSTALLATIONS W/ ① HV BLADE. Δ

| MAXIMUM A.S.D. PRESSURE RATING (psf) (+ or -) | FOR METAL STUD INSTALLATIONS | | | | | |
|---|---|---|---|---|---|---|
| | WALL MOUNTING | | FLOOR/CEILING MOUNTING | | MIN. SEPARATION TO GLASS | |
| | L+ (FT) | L- (FT) | L+ (FT) | L- (FT) | KNUCKLE | LOCK / CENTERMATE |
| 64 | 7 '- 0 " | 7 '- 0 " | - | - | 2 3/4 " | 4 1/8 " |
| 72 | 6 '- 7 " | 6 '- 7 " | - | - | 2 3/4 " | 4 1/8 " |

■ SEE SECTION ⑩ ON SHEET 10A.

- INSTALLATION IS NOT ALLOWED

## MAXIMUM SHUTTER SPAN "L+" OR "L−"* (ft.) FOR INSTALLATIONS W/ ① & ⑴Ⓐ◆ HV BLADES. Δ

| MAXIMUM A.S.D. PRESSURE RATING (psf) (+ or -) | POURED CONCRETE, CONCRETE BLOCK AND WOOD INSTALLATIONS | | | | | |
|---|---|---|---|---|---|---|
| | WALL MOUNTING | | FLOOR/CEILING MOUNTING | | MIN. SEPARATION TO GLASS | |
| | L+ (FT) | L- (FT) | L+ (FT) | L- (FT) | KNUCKLE | LOCK / CENTERMATE |
| 55 | 9 '- 6 " | 9 '- 6 " | 9 '- 6 " | 9 '- 6 " | 3 1/2 " | 3 3/8 " |
| 62 | 8 '- 11 " | 8 '- 11 " | 8 '- 11 " | 8 '- 11 " | 3 1/2 " | 3 3/8 " |

◆ SEE LIMITATIONS OF USE FOR BLADE ⑴Ⓐ ON SHEET 18.

* NOTES:

(1) L+: MAXIMUM ALLOWABLE SPAN FOR A GIVEN POSITIVE A.S.D. DESIGN LOAD.
L−: MAX. ALLOWABLE SPAN FOR A GIVEN NEGATIVE A.S.D. DESIGN LOAD.

(2) PROCEDURE TO DETERMINE MAXIMUM SPAN FOR WALL MOUNTINGS (TOP/BOTTOM) OR FLOOR/CEILING:

GIVEN A POSITIVE A.S.D. DESIGN LOAD, DETERMINE MAXIMUM SPAN "L+" FROM SCHEDULES.
GIVEN A NEGATIVE A.S.D. DESIGN LOAD, DETERMINE MAXIMUM SPAN "L−" FROM SCHEDULES.

FINAL MAXIMUM ALLOWABLE SPAN IS EQUAL TO THE MINIMUM DETERMINED SPAN BETWEEN "L+" AND "L−".

(3) PROCEDURE TO DETERMINE MAXIMUM SPAN FOR COMBINATIONS IN BETWEEN WALL MOUNTINGS W/ FLOOR/CEILING MOUNTINGS:

FOR A GIVEN POSITIVE A.S.D. DESIGN LOAD:
DETERMINE:
$L_{1+}$= MAX. SPAN FOR WALL MOUNTING INSTALLATIONS.
$L_{2+}$= MAX. SPAN FOR FLOOR/CEILING MOUNTING INSTALLATIONS.

FOR A GIVEN NEGATIVE A.S.D. DESIGN LOAD:
DETERMINE:
$L_{1-}$= MAX. SPAN FOR WALL MOUNTING INSTALLATIONS.
$L_{2-}$= MAX. SPAN FOR FLOOR/CEILING MOUNTING INSTALLATIONS.

FINAL MAXIMUM ALLOWABLE SPAN IS EQUAL TO THE MINIMUM BETWEEN "$L_{1+}$", "$L_{2+}$", "$L_{1-}$" AND "$L_{2-}$"

(4) GO TO ANCHOR SCHEDULE ON SHEETS 6, 7 & 8 FOR CONCRETE, BLOCK AND WOOD INSTALLATIONS AND TO SECTIONS ON SHEET 10 FOR KEYSTONE MOUNTINGS AND SHEET 10A FOR METAL STUDS WITH FINAL MAXIMUM ALLOWABLE SPAN AND NEGATIVE A.S.D. DESIGN LOAD TO DETERMINE MAXIMUM ANCHOR SPACING.

(5) MINIMUM SEPARATION TO GLASS SHALL BE THE GREATEST MEASURED FROM EITHER REAR OF KNUCKLES OR REAR OF LOCKS/CENTERMATES (AS APPLICABLE) TO GLASS.

Δ INSTALLATION LEGEND APPLICABLE FOR ① HV AND ⑴Ⓐ◆ HV BLADES

| MOUNTINGS \ SUBSTRATES | CONCRETE & MASONRY | METAL STUD | WOOD |
|---|---|---|---|
| WALL | 1, 2, 3, 4, 5 & 9 | 10 | 1W, 3W, 4W 7W, 9W & 10W |
| FLOOR/CEILING | 6, 7 & 8 | --- | 2W, 3W, 6W & 8W |

FLORIDA BUILDING CODE (**H**igh **V**elocity **H**urricane **Z**one)

PRODUCT REVISED
as complying with the Florida Building Code
Acceptance No 12-0514.03
Expiration Date 09/27/16
By
Miami Dade Product Control

MIAMI−DADE COUNTY

WALTER A. TILLIT JR. LICENSE No. 44167 STATE OF FLORIDA PROFESSIONAL ENGINEER

P.E. SEAL/SIGNATURE/DATE


TILTECO INC.
TILLIT TESTING & ENGINEERING COMPANY
6355 N.W. 36th. St., Ste. 305, VIRGINIA GARDENS, FLORIDA 33166
Phone : (305)871−1530 . Fax : (305)871−1531
e−mail: tilteco@aol.com
EB−0006719
WALTER A. TILLIT Jr. P.E.
FLORIDA Lic. # 44167

**JC IMPACT SHUTTERS & GLASS, INC.**
(ASSA # 43)
9465 N.W. 109 STREET, # 107
MEDLEY, FL 33178
PH: (305) 863−2727, FAX: (305) 889−1983


© 2013 EASTERN METAL SUPPLY, INC.

**BERTHA HV™**
Accordion Shutter System
H.V. BLADE #3 W/ OR W/O H.V. WINDOW BLADE #3

| REV. No | DESCRIPTION | DATE | DRAWN BY: A.G. |
|---|---|---|---|
| 1 | OLD 12−053 | 03/18/13 | DATE: 03/18/13 |
| 2 | SPANS/LOADS | 04/18/13 | DRAWING No 13−025 |
| 3 | | | |
| 4 | | | |
| 5 | | | SHEET 5 OF 18 |
| 6 | | | |

## MAXIMUM ANCHOR * SPACING (in.) SCHEDULE FOR A GIVEN MAX. SHUTTER SPAN, NEGATIVE A.S.D. DESIGN LOAD AND A CORRESPONDING MOUNTING TYPE FOR CONCRETE INSTALLATIONS

(SEE MOUNTINGS 1, 2, 3, 4 & 5 ON SHEET 9)

**POURED CONCRETE**

| MAXIMUM SPAN (ft) | ① & ② WALL MOUNTINGS W/ ③, ④ OR ④A — NEGATIVE A.S.D. DESIGN LOAD (psf) | | | | | | | | | ③ & ④ WALL MOUNTING W/ ② + ⑤ — NEGATIVE A.S.D. DESIGN LOAD (psf) | | | | | | | | | ⑤ WALL SILL MOUNTING W/ ⑧ + ⑤ — NEGATIVE A.S.D. DESIGN LOAD (psf) | | | | | | | | |
|---|---|---|---|---|---|---|---|---|---|---|---|---|---|---|---|---|---|---|---|---|---|---|---|---|---|---|---|
| | 30 | 40 | 50 | 60 | 70 | 80 | 90 | 100 | 110 | 30 | 40 | 50 | 60 | 70 | 80 | 90 | 100 | 110 | 30 | 40 | 50 | 60 | 70 | 80 | 90 | 100 | 110 |
| 3'-0" OR LESS | 9 | 9 | 9 | 9 | 9 | 9 | 9 | 9 | 9 | 9 | 9 | 9 | 9 | 9 | 9 | 9 | 9 | 9 | 9 | 9 | 9 | 9 | 9 | 9 | 9 | 9 | 9 |
| | – | – | – | – | – | – | – | – | – | – | – | – | – | – | – | – | – | – | – | – | – | – | – | – | – | – | – |
| | 9 | 9 | 9 | 9 | 9 | 9 | 9 | 9 | 9 | 9 | 9 | 9 | 9 | 9 | 9 | 9 | 9 | 9 | 9 | 9 | 9 | 9 | 9 | 9 | 9 | 9 | 9 |
| | 9 | 9 | 9 | 9 | 9 | 9 | 9 | 9 | 9 | 9 | 9 | 9 | 9 | 9 | 9 | 9 | 9 | 9 | 9 | 9 | 9 | 9 | 9 | 9 | 9 | 9 | 9 |
| 4'-0" | 9 | 9 | 9 | 9 | 9 | 9 | 9 | 9 | 9 | 9 | 9 | 9 | 9 | 9 | 9 | 9 | 9 | 9 | 9 | 9 | 9 | 9 | 9 | 9 | 9 | 9 | 9 |
| | – | – | – | – | – | – | – | – | – | – | – | – | – | – | – | – | – | – | – | – | – | – | – | – | – | – | – |
| | 9 | 9 | 9 | 9 | 9 | 9 | 9 | 8 | 6 | 9 | 9 | 9 | 9 | 9 | 9 | 9 | 9 | 9 | 9 | 9 | 9 | 9 | 9 | 9 | 9 | 9 | 9 |
| | 9 | 9 | 9 | 9 | 9 | 9 | 9 | 9 | 9 | 9 | 9 | 9 | 9 | 9 | 9 | 9 | 9 | 9 | 9 | 9 | 9 | 9 | 9 | 9 | 9 | 9 | 9 |
| 5'-0" | 9 | 9 | 9 | 9 | 9 | 9 | 9 | 7.5 | 6 | 9 | 9 | 9 | 9 | 9 | 9 | 9 | 9 | 9 | 9 | 9 | 9 | 9 | 9 | 9 | 9 | 9 | 9 |
| | – | – | – | – | – | – | – | – | – | – | – | – | – | – | – | – | – | – | – | – | – | – | – | – | – | – | – |
| | 9 | 9 | 9 | 9 | 9 | 8 | 5.5 | 4.5 | 3.5 | 9 | 9 | 9 | 9 | 9 | 9 | 9 | 9 | 9 | 9 | 9 | 9 | 9 | 9 | 9 | 9 | 9 | 9 |
| | 9 | 9 | 9 | 9 | 9 | 9 | 8.5 | 7 | 5.5 | 9 | 9 | 9 | 9 | 9 | 9 | 9 | 9 | 9 | 9 | 9 | 9 | 9 | 9 | 9 | 9 | 9 | 9 |
| 6'-0" | 9 | 9 | 9 | 9 | 9 | 8.5 | 6.5 | 5 | – | 9 | 9 | 9 | 9 | 9 | 9 | 9 | 9 | – | 9 | 9 | 9 | 9 | 9 | 9 | 9 | 9 | – |
| | – | – | – | – | – | – | – | – | – | – | – | – | – | – | – | – | – | – | – | – | – | – | – | – | – | – | – |
| | 9 | 9 | 9 | 9 | 6.5 | 4.5 | 4 | 3 | – | 9 | 9 | 9 | 9 | 9 | 9 | 9 | 9 | – | 9 | 9 | 9 | 9 | 9 | 9 | 9 | 9 | – |
| | 9 | 9 | 9 | 9 | 9 | 7.5 | 5.5 | 4.5 | – | 9 | 9 | 9 | 9 | 9 | 9 | 9 | 9 | – | 9 | 9 | 9 | 9 | 9 | 9 | 9 | 9 | – |
| 7'-0" | 9 | 9 | 9 | 9 | 8 | 6 | 4.5 | – | – | 9 | 9 | 9 | 9 | 9 | 9 | 9 | – | – | 9 | 9 | 9 | 9 | 9 | 9 | 9 | – | – |
| | – | – | – | – | – | – | – | – | – | – | – | – | – | – | – | – | – | – | – | – | – | – | – | – | – | – | – |
| | 9 | 9 | 9 | 6.5 | 4.5 | 3.5 | 3.5 | – | – | 9 | 9 | 9 | 9 | 9 | 9 | 9 | – | – | 9 | 9 | 9 | 9 | 9 | 9 | 9 | – | – |
| | 9 | 9 | 9 | 9 | 7 | 5.5 | 4 | – | – | 9 | 9 | 9 | 9 | 9 | 9 | 9 | – | – | 9 | 9 | 9 | 9 | 9 | 9 | 9 | – | – |
| 8'-0" | 9 | 9 | 9 | 8.5 | 6 | 4.5 | – | – | – | 9 | 9 | 9 | 9 | 9 | 9 | – | – | – | 9 | 9 | 9 | 9 | 9 | 9 | – | – | – |
| | – | – | – | – | – | – | – | – | – | – | – | – | – | – | – | – | – | – | – | – | – | – | – | – | – | – | – |
| | 9 | 9 | 8 | 4.5 | 3.5 | – | – | – | – | 9 | 9 | 9 | 9 | 9 | 9 | – | – | – | 9 | 9 | 9 | 9 | 9 | 9 | – | – | – |
| | 9 | 9 | 9 | 7.5 | 5.5 | 4 | – | – | – | 9 | 9 | 9 | 9 | 9 | 9 | – | – | – | 9 | 9 | 9 | 9 | 9 | 9 | – | – | – |
| 9'-0" | 9 | 9 | 9 | 6.5 | 4.5 | – | – | – | – | 9 | 9 | 9 | 9 | 9 | – | – | – | – | 9 | 9 | 9 | 9 | 9 | – | – | – | – |
| | – | – | – | – | – | – | – | – | – | – | – | – | – | – | – | – | – | – | – | – | – | – | – | – | – | – | – |
| | 9 | 9 | 5.5 | 3.5 | – | – | – | – | – | 9 | 9 | 9 | 9 | 9 | – | – | – | – | 9 | 9 | 9 | 9 | 9 | – | – | – | – |
| | 9 | 9 | 8.5 | 5.5 | 4 | – | – | – | – | 9 | 9 | 9 | 9 | 9 | – | – | – | – | 9 | 9 | 9 | 9 | 9 | – | – | – | – |
| 10'-0" | 9 | 9 | 7.5 | 5 | 4 | – | – | – | – | 9 | 9 | 9 | 9 | 9 | – | – | – | – | 9 | 9 | 9 | 9 | 9 | – | – | – | – |
| | – | – | – | – | – | – | – | – | – | – | – | – | – | – | – | – | – | – | – | – | – | – | – | – | – | – | – |
| | 9 | 8 | 4.5 | 3 | – | – | – | – | – | 9 | 9 | 9 | 9 | 9 | – | – | – | – | 9 | 9 | 9 | 9 | 9 | – | – | – | – |
| | 9 | 9 | 7 | 4.5 | – | – | – | – | – | 9 | 9 | 9 | 9 | 9 | – | – | – | – | 9 | 9 | 9 | 9 | 9 | – | – | – | – |
| 11'-0" | 9 | 9 | 6 | 4.5 | 3.5 | – | – | – | – | 9 | 9 | 9 | 9 | 9 | – | – | – | – | 9 | 9 | 9 | 9 | 9 | – | – | – | – |
| | – | – | – | – | – | – | – | – | – | – | – | – | – | – | – | – | – | – | – | – | – | – | – | – | – | – | – |
| | 9 | 6 | 3.5 | – | – | – | – | – | – | 9 | 9 | 9 | 9 | 9 | – | – | – | – | 9 | 9 | 9 | 9 | 9 | – | – | – | – |
| | 9 | 9 | 5.5 | 4 | – | – | – | – | – | 9 | 9 | 9 | 9 | 9 | – | – | – | – | 9 | 9 | 9 | 9 | 9 | – | – | – | – |
| 12'-0" | 9 | 8.5 | 5 | 3.5 | – | – | – | – | – | 9 | 9 | 9 | 9 | – | – | – | – | – | 9 | 9 | 9 | 9 | – | – | – | – | – |
| | – | – | – | – | – | – | – | – | – | – | – | – | – | – | – | – | – | – | – | – | – | – | – | – | – | – | – |
| | 9 | 4.5 | 3 | – | – | – | – | – | – | 9 | 9 | 9 | 9 | – | – | – | – | – | 9 | 9 | 9 | 9 | – | – | – | – | – |
| | 9 | 7.5 | 4.5 | – | – | – | – | – | – | 9 | 9 | 9 | 9 | – | – | – | – | – | 9 | 9 | 9 | 9 | – | – | – | – | – |
| 13'-0" | 9 | 7 | – | – | – | – | – | – | – | 9 | 9 | – | – | – | – | – | – | – | 9 | 9 | – | – | – | – | – | – | – |
| | – | – | – | – | – | – | – | – | – | – | – | – | – | – | – | – | – | – | – | – | – | – | – | – | – | – | – |
| | 8.5 | 4 | – | – | – | – | – | – | – | 9 | 9 | – | – | – | – | – | – | – | 9 | 9 | – | – | – | – | – | – | – |
| | 9 | 6 | – | – | – | – | – | – | – | 9 | 9 | – | – | – | – | – | – | – | 9 | 9 | – | – | – | – | – | – | – |

**ANCHORS SPACING LEGEND**

| |
|---|
| TAPCON OR TAPCON W/ ADVANCED THREADFORM TECHNOLOGY |
| ALL POINTS SOLID-SET |
| BLUE TAP WITH CAP |
| TAPPER + |

### *SPECIFICATIONS ON ANCHOR REQUIREMENTS: POURED CONCRETE OR CONCRETE BLOCK SUBSTRATES

1. ANCHORS TO WALL SHALL BE AS FOLLOWS:

(A) TO EXISTING POURED CONCRETE:
- 1/4"ø TAPCON OR TAPCON W/ ADVANCED THREADFORM TECHNOLOGY, AS MANUFACTURED BY I.T.W. BUILDEX. (Min. f'c = 3 ksi).
- 1/4"ø x 3/4" ALL POINTS SOLID-SET ANCHORS AS DISTRIBUTED BY ALL POINTS SCREW, BOLT & SPECIALTY COMPANY. (Min. f'c = 3 ksi).
- 1/4"ø BLUE TAP CONCRETE ANCHORS WITH CAP, AS MANUFACTURED BY FLORIDA FASTENERS DIRECT, INC. (Min. f'c = 2 ksi).
- 1/4"ø TAPPER+ ANCHORS AS MANUFACTURED BY POWERS FASTENERS, INC. (Min. f'c = 3 ksi), AND DISTRIBUTED BY ALL POINTS SCREW, BOLT & SPECIALTY COMPANY OR ANY OTHER APPROVED LICENSED OR AUTHORIZED VENDOR REGISTERED W/ THE AMERICAN SHUTTER SYSTEMS ASSOCIATION, INC.

NOTES:

A.1) MINIMUM EMBEDMENT INTO POURED CONCRETE OF TAPCON OR TAPCON W/ ADVANCED THREADFORM TECHNOLOGY AND TAPPER+ ANCHORS IS 1 3/4", AND 1 1/2" FOR BLUE TAP WITH CAP ANCHORS.

A.2) MINIMUM EMBEDMENT OF 1/4"ø x 3/4" ALL POINTS SOLID-SET ANCHORS SHALL BE 7/8" INTO THE POURED CONCRETE. NO EMBEDMENT INTO STUCCO SHALL BE PERMITTED. 1/4" ø-20 S.S. MACHINE SCREW USED SHALL BE 1 1/2" LONG MINIMUM SHOULD STUCCO EXIST, AND 1" MINIMUM FOR WALLS WITH NO STUCCO.

A.3) IN CASE THAT PRECAST STONE, PRECAST CONCRETE PANELS, PAVERS OR ANY VENEER BE FOUND ON THE EXISTING WALL OR FLOOR, ANCHORS SHALL BE LONG ENOUGH TO REACH THE MAIN STRUCTURE BEHIND SAID WALL FINISHES. ANCHORAGE SHALL BE AS INDICATED ON NOTES A.1) & A.2) ABOVE. FOR INSTALLATIONS ON VINYL SIDING WITH OR WITHOUT METAL STUDS OR EIFS WITH WOOD STUDS CONSULT THIS ENGINEER. FOR INSTALLATIONS INTO EIFS WITH METAL STUDS SEE SHEET 10.

(B) TO EXISTING ASTM C-90 CONCRETE BLOCK WALL:
- 1/4"ø TAPCON OR TAPCON W/ ADVANCED THREADFORM TECHNOLOGY ANCHORS, AS MANUFACTURED BY I.T.W. BUILDEX.
- 1/4"ø x 3/4" ALL POINTS SOLID-SET ANCHORS AS DISTRIBUTED BY ALL POINTS SCREW, BOLT & SPECIALTY COMPANY.
- 1/4"ø BLUE TAP CONCRETE ANCHORS WITH CAP, AS MANUFACTURED BY FLORIDA FASTENERS DIRECT, INC.
- 1/4"ø TAPPER+ ANCHORS AS MANUFACTURED BY POWERS FASTENERS, INC., AND DISTRIBUTED BY ALL POINTS SCREW, BOLT & SPECIALTY COMPANY OR ANY OTHER APPROVED LICENSED OR AUTHORIZED VENDOR REGISTERED W/ THE AMERICAN SHUTTER SYSTEMS ASSOCIATION, INC.

NOTES:

B.1) MINIMUM EMBEDMENT INTO CONCRETE BLOCK OF TAPCON ANCHOR IS 1 1/4" AND 1" FOR TAPCON W/ ADVANCED THREADFORM TECHNOLOGY ANCHOR, AND 1 1/4" FOR TAPPER+ AND BLUE TAP WITH CAP ANCHORS.

B.2) MINIMUM EMBEDMENT OF 1/4"ø x 3/4" ALL POINTS SOLID-SET ANCHORS SHALL BE ENTIRELY EMBEDDED INTO THE CONCRETE BLOCK. NO EMBEDMENT INTO STUCCO SHALL BE PERMITTED. 1/4" ø-20 S.S. MACHINE SCREW USED SHALL BE 1 1/2" LONG MINIMUM SHOULD STUCCO EXIST, AND 1" MINIMUM FOR WALLS WITH NO STUCCO.

B.3) IN CASE THAT PRECAST STONE, PRECAST CONCRETE PANELS, PAVERS OR ANY VENEER BE FOUND ON THE EXISTING WALL OR FLOOR, ANCHORS SHALL BE LONG ENOUGH TO REACH THE MAIN STRUCTURE BEHIND SAID WALL FINISHES. ANCHORAGE SHALL BE AS INDICATED ON NOTES B.1) & B.2) ABOVE. FOR INSTALLATIONS ON VINYL SIDING WITH OR WITHOUT METAL STUDS OR EIFS WITH WOOD STUDS CONSULT THIS ENGINEER. FOR INSTALLATIONS INTO EIFS WITH METAL STUDS SEE SHEET 10.

(C) ANCHORS SHALL BE INSTALLED FOLLOWING ALL OF THE RECOMMENDATIONS AND SPECIFICATIONS OF THE ANCHOR'S MANUFACTURER.

(D) SEE SCHEDULE BELOW FOR EDGE DISTANCE (E.D.) VERSUS SPACING RELATIONSHIP FOR ANCHORS.

**EDGE DISTANCE VERSUS SPACING SCHEDULE FOR ANCHORS:**

MAXIMUM ANCHOR SPACINGS ARE VALID FOR EDGE DISTANCES INDICATED BELOW. FOR E. D. LESS THAN THE INDICATED, REDUCE ANCHOR SPACING BY MULTIPLYING SPACING SHOWN ON SCHEDULE BY THE FOLLOWING FACTORS. REDUCED SPACING OBTAINED USING FACTOR SHALL NOT BE LESS THAN MINIMUM SPACING INDICATED FOR EACH ANCHOR TYPE.

| ACTUAL EDGE DICTANCE E.D. | FACTOR | | | | | | |
|---|---|---|---|---|---|---|---|
| | TAPCON | TAPCON WITH ADVANCED THREADFORM TECHNOLOGY | | ALL POINTS SOLID SET | BLUE TAP WITH CAP | TAPPER + MIN. SPACING | |
| | MIN. SPACING = 3" | MIN. SPACING = 3" | | MIN. SPACING = 3 1/2" | MIN. SPACING = 3" | 3 3/4" | 4" |
| | POURED CONCRETE & CONCRETE BLOCK MIN. E.D. = 3" | POURED CONCRETE MIN. E.D. = 3 1/2" | CONCRETE BLOCK MIN. E.D. = 2 1/2" | POURED CONCRETE & CONCRETE BLOCK MIN. E.D. = 3 1/2" | POURED CONCRETE & CONCRETE BLOCK MIN. E.D. = 3" | POURED CONCRETE MIN. E.D. = 3 1/2" | CONCRETE BLOCK MIN. E.D. = 2 1/2" |
| 3" | 1.0 | 0.90 | 1.0 | 0.78 | 1.0 | 0.84 | 1.0 |
| 2 1/2" | – | 0.81 | 1.0 | – | – | 0.67 | 1.0 |
| 2" | – | 0.71 | – | – | – | 0.51 | – |
| 1 3/4" | – | 0.91 | – | – | – | 0.43 | – |
| 1 1/2" | 0.35 | – | – | – | – | 0.35 | – |

## ① HV BLADE #3 OR ① HV BLADE #3 W/ ①A HV WINDOW BLADE WORKING IN UNISON◆

◆ SEE LIMITATIONS OF USE FOR BLADE ①A ON SHEET 18.

FLORIDA BUILDING CODE (**H**igh **V**elocity **H**urricane **Z**one)

PRODUCT REVISED
as complying with the Florida Building Code
Acceptance No. 13-0514.03
Expiration Date 09/22/2016
By [signature]
Miami Dade Product Control

MIAMI-DADE COUNTY

WALTER A. TILLIT JR. LICENSE No. 44167 STATE OF FLORIDA PROFESSIONAL ENGINEER
9/20/13

P.E. SEAL/SIGNATURE/DATE


TILTECO INC.
TILLIT TESTING & ENGINEERING COMPANY
6355 N.W. 36th. St., Ste. 305, VIRGINIA GARDENS, FLORIDA 33166
Phone : (305)871-1530 . Fax : (305)871-1531
e-mail: tilteco@aol.com
EB-0006719
WALTER A. TILLIT Jr. P.E.
FLORIDA Lic. # 44167



**JC IMPACT SHUTTERS & GLASS, INC.**
(ASSA # 43)
9465 N.W. 109 STREET, # 107
MEDLEY, FL 33178
PH: (305) 863-2727, FAX: (305) 889-1983


© 2013 EASTERN METAL SUPPLY, INC.

**BERTHA HV™**
Accordion Shutter System
H.V. BLADE #3 W/ OR W/O H.V. WINDOW BLADE #3

| REV. No | DESCRIPTION | DATE | DRAWN BY: A.G. |
|---|---|---|---|
| 1 | OLD 12-053 | 04/18/13 | DATE: 03/18/13 |
| 2 | | | DRAWING No 13-025 |
| 3 | | | |
| 4 | | | |
| 5 | | | SHEET 6 OF 18 |
| 6 | | | |

**ANCHORS SPACING LEGEND**

| |
|---|
| TAPCON OR TAPCON W/ ADVANCED THREADFORM TECHNOLOGY |
| ALL POINTS SOLID-SET |
| BLUE TAP WITH CAP |
| TAPPER + |

# ① HV BLADE #3 OR ① HV BLADE #3 W/ ⑴A HV WINDOW BLADE WORKING IN UNISON ◆

* SEE ANCHOR SPECIFICATIONS ON SHEET 6

◆ SEE LIMITATIONS OF USE FOR BLADE ⑴A ON SHEET 18.

## MAXIMUM ANCHOR * SPACING (in.) SCHEDULE FOR A GIVEN MAX. SHUTTER SPAN, NEGATIVE A.S.D. DESIGN LOAD AND A CORRESPONDING MOUNTING TYPE FOR CONCRETE OR CONCRETE BLOCK INSTALLATIONS

(SEE MOUNTINGS 1 THRU 8, SEE SHEETS 9 & 10)

| MAXIMUM SPAN (ft) | CONCRETE BLOCK | | | | | | | | | | | | | | | | | | | | | | | | | | | | | | | | POURED CONCRETE | | | | | | | | | | | | | | | | | | | |
|---|---|---|---|---|---|---|---|---|---|---|---|---|---|---|---|---|---|---|---|---|---|---|---|---|---|---|---|---|---|---|---|---|---|---|---|---|---|---|---|---|---|---|---|---|---|---|---|---|---|---|---|---|
| | ① & ② WALL MOUNTINGS W/ ③ OR ⑷A. | | | | | | | | ① & ② WALL MOUNTINGS W/ ④. | | | | | | | | ③ & ④ WALL MOUNTING W/ ② + ⑤ | | | | | | | | ⑤ WALL SILL MOUNTING W/ ⑧ + ⑤ | | | | | | | | ⑥ FLOOR MOUNTING W/ ⑧ | | | | | | | | ⑦ CEILING MOUNTING W/ ② | | | | | | | | ⑧ FLOOR MOUNTING W/ ⑥ + ⑦ | | | | | | | |
| | A.S.D. DESIGN NEGATIVE LOAD (psf) | | | | | | | | A.S.D. DESIGN NEGATIVE LOAD (psf) | | | | | | | | A.S.D. DESIGN NEGATIVE LOAD (psf) | | | | | | | | A.S.D. DESIGN NEGATIVE LOAD (psf) | | | | | | | | A.S.D. DESIGN NEGATIVE LOAD (psf) | | | | | | | | A.S.D. DESIGN NEGATIVE LOAD (psf) | | | | | | | | A.S.D. DESIGN NEGATIVE LOAD (psf) | | | | | | | |
| | 30 | 40 | 50 | 60 | 70 | 80 | 90 | 110 | 30 | 40 | 50 | 60 | 70 | 80 | 90 | 110 | 30 | 40 | 50 | 60 | 70 | 80 | 90 | 110 | 30 | 40 | 50 | 60 | 70 | 80 | 90 | 110 | 30 | 40 | 50 | 60 | 70 | 80 | 90 | 110 | 30 | 40 | 50 | 60 | 70 | 80 | 90 | 110 | 30 | 40 | 50 | 60 | 70 | 80 | 90 | 110 |
| 3'-0" OR LESS | 9 | 9 | 9 | 9 | 9 | 9 | 9 | 9 | 9 | 9 | 9 | 9 | 9 | 9 | 9 | 8 | 9 | 9 | 9 | 9 | 9 | 9 | 9 | 9 | 9 | 9 | 9 | 9 | 9 | 9 | 9 | 9 | 9 | 9 | 9 | 9 | 9 | 9 | 9 | 9 | 9 | 9 | 9 | 9 | 9 | 9 | 9 | 9 | 9 | 9 | 9 | 9 |
| | – | – | – | – | – | – | – | – | – | – | – | – | – | – | – | – | – | – | – | – | – | – | – | – | – | – | – | – | – | – | – | – | 9 | 9 | 9 | 9 | 9 | 9 | 9 | 9 | – | – | – | – | – | – | – | – | 9 | 9 | 9 | 9 | 9 | 9 | 9 | 9 |
| | 9 | 9 | 9 | 9 | 9 | 9 | 9 | 9 | 9 | 9 | 9 | 9 | 9 | 9 | 9 | 9 | 9 | 9 | 9 | 9 | 9 | 9 | 9 | 9 | 9 | 9 | 9 | 9 | 9 | 9 | 9 | 9 | 9 | 9 | 9 | 9 | 9 | 9 | 9 | 9 | 9 | 9 | 9 | 9 | 9 | 9 | 9 | 9 | 9 | 9 | 9 | 9 |
| | 9 | 9 | 9 | 9 | 9 | 9 | 9 | 9 | 9 | 9 | 9 | 9 | 9 | 9 | 9 | 9 | 9 | 9 | 9 | 9 | 9 | 9 | 9 | 9 | 9 | 9 | 9 | 9 | 9 | 9 | 9 | 9 | 9 | 9 | 9 | 9 | 9 | 9 | 9 | 9 | 9 | 9 | 9 | 9 | 9 | 9 | 9 | 9 | 9 | 9 | 9 | 9 |
| 4'-0" | 9 | 9 | 9 | 9 | 9 | 9 | 9 | 8 | 9 | 9 | 9 | 9 | 9 | 9 | 5 | – | 9 | 9 | 9 | 9 | 9 | 9 | 9 | 8 | 9 | 9 | 9 | 9 | 9 | 9 | 9 | 9 | 9 | 9 | 9 | 9 | 9 | 9 | 9 | 9 | – | – | – | – | – | – | – | – | 9 | 9 | 9 | 9 | 9 | 9 | 9 | 9 |
| | – | – | – | – | – | – | – | – | – | – | – | – | – | – | – | – | – | – | – | – | – | – | – | – | – | – | – | – | – | – | – | – | 9 | 9 | 9 | 9 | 9 | 9 | 9 | 9 | – | – | – | – | – | – | – | – | 9 | 9 | 9 | 9 | 9 | 9 | 8.5 | 7 |
| | 9 | 9 | 9 | 9 | 9 | 9 | 9 | 3 | 9 | 9 | 9 | 9 | 9 | 9 | 6.5 | 3 | 9 | 9 | 9 | 9 | 9 | 9 | 9 | 9 | 9 | 9 | 9 | 9 | 9 | 9 | 9 | 9 | 9 | 9 | 9 | 9 | 9 | 9 | 9 | 9 | 9 | 9 | 9 | 9 | 9 | 9 | 9 | 9 | 9 | 9 | 9 | 8.5 |
| | 9 | 9 | 9 | 9 | 9 | 9 | 9 | 9 | 9 | 9 | 9 | 9 | 9 | 9 | 7 | – | 9 | 9 | 9 | 9 | 9 | 9 | 9 | 9 | 9 | 9 | 9 | 9 | 9 | 9 | 9 | 9 | 9 | 9 | 9 | 9 | 9 | 9 | 9 | 9 | 9 | 9 | 9 | 9 | 9 | 9 | 9 | 9 | 9 | 9 | 9 | 7.5 |
| 5'-0" | 9 | 9 | 9 | 9 | 9 | 8.5 | 7.5 | 3 | 9 | 9 | 9 | 9 | 6 | 3.5 | – | – | 9 | 9 | 9 | 9 | 9 | 8.5 | 7.5 | 6 | 9 | 9 | 9 | 9 | 9 | 8.5 | 7.5 | 6 | 9 | 9 | 9 | 9 | 9 | 9 | 9 | 9 | – | – | – | – | – | – | – | – | 9 | 9 | 9 | 9 | 9 | 9 | 9 | 8.5 |
| | – | – | – | – | – | – | – | – | – | – | – | – | – | – | – | – | – | – | – | – | – | – | – | – | – | – | – | – | – | – | – | – | 9 | 9 | 9 | 9 | 9 | 9 | 9 | 9 | 9 | 9 | 9 | 9 | 9 | 8.5 | 7 | 9 | 9 | 9 | 9 | 8.5 | 7.5 | 6.5 | 5.5 |
| | 9 | 9 | 9 | 9 | 9 | 8 | 5.5 | – | 9 | 9 | 9 | 9 | 7 | 4 | 3 | – | 9 | 9 | 9 | 9 | 9 | 9 | 9 | 7.5 | 9 | 9 | 9 | 9 | 9 | 9 | 9 | 7.5 | 9 | 9 | 9 | 9 | 9 | 9 | 9 | 9 | 9 | 9 | 9 | 9 | 9 | 9 | 9 | 8.5 | 9 | 9 | 9 | 9 | 9 | 9 | 8.5 | 7 |
| | 9 | 9 | 9 | 9 | 9 | 9 | 9 | 4 | 9 | 9 | 9 | 9 | 8 | 4.5 | – | – | 9 | 9 | 9 | 9 | 9 | 9 | 9 | 6 | 9 | 9 | 9 | 9 | 9 | 9 | 9 | 8 | 9 | 9 | 9 | 9 | 9 | 9 | 9 | – | 9 | 9 | 9 | 9 | 9 | 9 | 9 | – | 9 | 9 | 9 | 9 | 9 | 8.5 | 7.5 | – |
| 6'-0" | 9 | 9 | 9 | 9 | 8 | 6 | 3 | – | 9 | 9 | 9 | 5 | 3 | – | – | – | 9 | 9 | 9 | 9 | 8 | 7 | 6.5 | – | 9 | 9 | 9 | 9 | 8 | 7 | 6.5 | – | 9 | 9 | 9 | 9 | 9 | 9 | 9 | – | – | – | – | – | – | – | – | – | 9 | 9 | 9 | 9 | 9 | 9 | 8.5 | – |
| | – | – | – | – | – | – | – | – | – | – | – | – | – | – | – | – | – | – | – | – | – | – | – | – | – | – | – | – | – | – | – | – | 9 | 9 | 9 | 9 | 9 | 9 | 9 | – | 9 | 9 | 9 | 9 | 9 | 8 | 7 | – | 9 | 9 | 9 | 8.5 | 7 | 6 | 5.5 | – |
| | 9 | 9 | 9 | 8 | 6 | 4 | 4 | – | 9 | 9 | 9 | 6.5 | 3.5 | – | – | – | 9 | 9 | 9 | 9 | 9 | 8.5 | 7.5 | – | 9 | 9 | 9 | 9 | 9 | 8.5 | 7.5 | – | 9 | 9 | 9 | 9 | 9 | 9 | 9 | – | 9 | 9 | 9 | 9 | 9 | 9 | 8.5 | – | 9 | 9 | 9 | 9 | 9 | 8 | 7 | – |
| | 9 | 9 | 9 | 9 | 9 | 8 | 4 | – | 9 | 9 | 9 | 7 | 4.5 | – | – | – | 9 | 9 | 9 | 9 | 9 | 9 | 8 | – | 9 | 9 | 9 | 9 | 9 | 9 | 8 | – | 9 | 9 | 9 | 9 | 9 | 9 | 9 | – | 9 | 9 | 9 | 9 | 9 | 9 | 8 | – | 9 | 9 | 9 | 9 | 8.5 | 7.5 | 6.5 | – |
| 7'-0" | 9 | 9 | 9 | 8 | 5.5 | 3 | – | – | 9 | 9 | 6 | 3 | – | – | – | – | 9 | 9 | 9 | 8 | 7 | 6 | 5.5 | – | 9 | 9 | 9 | 8 | 7 | 6.5 | 5.5 | – | 9 | 9 | 9 | 9 | 9 | 9 | 9 | – | – | – | – | – | – | – | – | – | 9 | 9 | 9 | 9 | 9 | 9 | 8.5 | – |
| | – | – | – | – | – | – | – | – | – | – | – | – | – | – | – | – | – | – | – | – | – | – | – | – | – | – | – | – | – | – | – | – | 9 | 9 | 9 | 9 | 9 | 9 | 9 | – | 9 | 9 | 9 | 9 | 8 | 7 | 6 | – | 9 | 9 | 8.5 | 7 | 6 | 5.5 | 4.5 | – |
| | 9 | 9 | 9 | 6 | 4.5 | 3.5 | 3 | – | 9 | 9 | 7 | 3.5 | – | – | – | – | 9 | 9 | 9 | 9 | 8.5 | 7.5 | 6.5 | – | 9 | 9 | 9 | 9 | 8.5 | 7.5 | 6.5 | – | 9 | 9 | 9 | 9 | 9 | 9 | 9 | – | 9 | 9 | 9 | 9 | 9 | 8 | 7.5 | – | 9 | 9 | 9 | 9 | 7.5 | 6.5 | 6 | – |
| | 9 | 9 | 9 | 9 | 7 | – | – | – | 9 | 9 | 7.5 | 4 | – | – | – | – | 9 | 9 | 9 | 9 | 9 | 8 | 7 | – | 9 | 9 | 9 | 9 | 9 | 8 | 7 | – | 9 | 9 | 9 | 9 | 9 | 9 | 9 | – | 9 | 9 | 9 | 9 | 9 | 8 | – | – | 9 | 9 | 9 | 8.5 | 7.5 | 6.5 | – | – |
| 8'-0" | 9 | 9 | 8.5 | 6 | 3 | – | – | – | 9 | 9 | 3.5 | – | – | – | – | – | 9 | 9 | 8.5 | 7 | 6 | 5.5 | – | – | 9 | 9 | 8.5 | 7 | 6 | 5.5 | – | – | 9 | 9 | 9 | 9 | 9 | 9 | – | – | – | – | – | – | – | – | – | – | 9 | 9 | 9 | 9 | 9 | 8 | 7.5 | – |
| | – | – | – | – | – | – | – | – | – | – | – | – | – | – | – | – | – | – | – | – | – | – | – | – | – | – | – | – | – | – | – | – | 9 | 9 | 9 | 9 | 9 | 9 | – | – | 9 | 9 | 9 | 8 | 7 | 6 | – | – | 9 | 9 | 7.5 | 6 | 5.5 | 4.5 | – | – |
| | 9 | 9 | 8 | 4 | 3.5 | – | – | – | 9 | 6.5 | 4 | – | – | – | – | – | 9 | 9 | 9 | 8.5 | 7.5 | 6.6 | – | – | 9 | 9 | 9 | 8.5 | 7.5 | 6.5 | – | – | 9 | 9 | 9 | 9 | 9 | 9 | – | – | 9 | 9 | 9 | 8 | 7 | 6 | – | – | 9 | 9 | 9 | 8 | 6.5 | 6 | – | – |
| | 9 | 9 | 9 | 8 | – | – | – | – | 9 | 9 | 4.5 | – | – | – | – | – | 9 | 9 | 9 | 9 | 8 | 7 | – | – | 9 | 9 | 9 | 9 | 8 | 7 | – | – | 9 | 9 | 9 | 9 | 9 | 9 | – | – | 9 | 9 | 9 | 9 | 8 | – | – | – | 9 | 9 | 9 | 7.5 | 6.5 | – | – | – |
| 9'-0" | 9 | 9 | 7.5 | 3 | – | – | – | – | 9 | 5 | – | – | – | – | – | – | 9 | 9 | 7.5 | 6.5 | 5.5 | – | – | – | 9 | 9 | 7.5 | 6.5 | 5.5 | – | – | – | 9 | 9 | 9 | 9 | 9 | – | – | – | – | – | – | – | – | – | – | – | 9 | 9 | 9 | 8.5 | 7.5 | – | – | – |
| | – | – | – | – | – | – | – | – | – | – | – | – | – | – | – | – | – | – | – | – | – | – | – | – | – | – | – | – | – | – | – | – | 9 | 9 | 9 | 9 | 9 | – | – | – | 9 | 9 | 9 | 7 | 6 | – | – | – | 9 | 8.5 | 6.5 | 5.5 | 4.5 | – | – |
| | 9 | 9 | 5 | 3.5 | – | – | – | – | 9 | 4 | 3 | – | – | – | – | – | 9 | 9 | 9 | 7.5 | 6.5 | – | – | – | 9 | 9 | 9 | 7.5 | 6.5 | – | – | – | 9 | 9 | 9 | 9 | 9 | – | – | – | 9 | 9 | 9 | 8.5 | 7.5 | – | – | – | 9 | 9 | 8.5 | 7 | 6 | – | – | – |
| | 9 | 9 | 9 | 4 | – | – | – | – | 9 | 7 | – | – | – | – | – | – | 9 | 9 | 9 | 8 | 7 | – | – | – | 9 | 9 | 9 | 8 | 7 | – | – | – | 9 | 9 | 9 | 9 | 9 | – | – | – | 9 | 9 | 9 | 8.5 | 7 | – | – | – | 9 | 9 | 8.5 | 7 | 6 | – | – | – |
| 10'-0" | 9 | 8.5 | 4.5 | – | – | – | – | – | 9 | 3.5 | – | – | – | – | – | – | 9 | 8.5 | 7 | 5.5 | 5 | – | – | – | 9 | 8.5 | 7 | 5.5 | 5 | – | – | – | 9 | 9 | 9 | 9 | 9 | – | – | – | – | – | – | – | – | – | – | – | 9 | 9 | 9 | 8 | 6.5 | – | – | – |
| | – | – | – | – | – | – | – | – | – | – | – | – | – | – | – | – | – | – | – | – | – | – | – | – | – | – | – | – | – | – | – | – | 9 | 9 | 9 | 9 | 9 | – | – | – | – | – | 8.5 | 6.5 | 5.5 | – | – | – | 9 | 7.5 | 6 | 5 | 4 | – | – | – |
| | 9 | 8 | 4.5 | 3 | – | – | – | – | 9 | 3 | – | – | – | – | – | – | 9 | 9 | 8 | 7 | 6 | – | – | – | 9 | 9 | 8 | 7 | 6 | – | – | – | 9 | 9 | 9 | 9 | 9 | – | – | – | 9 | 9 | 9 | 7.5 | 6.5 | – | – | – | 9 | 9 | 7.5 | 6.5 | 5.5 | – | – | – |
| | 9 | 9 | 6 | – | – | – | – | – | 9 | 4.5 | – | – | – | – | – | – | 9 | 9 | 9 | 7.5 | 6.5 | – | – | – | 9 | 9 | 9 | 7.5 | 6.5 | – | – | – | 9 | 9 | 9 | 9 | 9 | – | – | – | 9 | 9 | 9 | 7.5 | 6.5 | – | – | – | 9 | 9 | 7.5 | 6.5 | 5.5 | – | – | – |
| 11'-0" | 9 | 8 | 3 | – | – | – | – | – | 8 | – | – | – | – | – | – | – | 9 | 8 | 6 | 5 | 4 | – | – | – | 9 | 8 | 6 | 5 | 4.5 | – | – | – | 9 | 9 | 9 | 9 | 9 | – | – | – | – | – | – | – | – | – | – | – | 9 | 9 | 8.5 | 7 | 6 | – | – | – |
| | – | – | – | – | – | – | – | – | – | – | – | – | – | – | – | – | – | – | – | – | – | – | – | – | – | – | – | – | – | – | – | – | 9 | 9 | 9 | 9 | 9 | – | – | – | 9 | 9 | 7 | 6 | 5 | – | – | – | 9 | 7 | 5.5 | 4.5 | 4 | – | – | – |
| | 9 | 5 | 3 | – | – | – | – | – | 9 | 9 | – | – | – | – | – | – | 9 | 9 | 7.5 | 6 | 5 | – | – | – | 9 | 9 | 7.5 | 6 | 5.5 | – | – | – | 9 | 9 | 9 | 9 | 9 | – | – | – | 9 | 9 | 8.5 | 7 | 6 | – | – | – | 9 | 8.5 | 7 | 5.5 | 5 | – | – | – |
| | 7 | 9 | 4 | – | – | – | – | – | 7 | – | – | – | – | – | – | – | 9 | 9 | 9 | 6.5 | 5 | – | – | – | 9 | 9 | 8 | 6.5 | 5.5 | – | – | – | 9 | 9 | 9 | 9 | 9 | – | – | – | 9 | 9 | 8.5 | 7 | – | – | – | – | 9 | 8.5 | 7 | 5.5 | – | – | – | – |
| 12'-0" | 9 | 6 | – | – | – | – | – | – | 5 | – | – | – | – | – | – | – | 9 | 7 | 5.5 | 4.5 | – | – | – | – | 9 | 7 | 5.5 | 4.5 | – | – | – | – | 9 | 9 | 9 | 9 | – | – | – | – | – | – | – | – | – | – | – | – | 9 | 9 | 8 | 6.5 | – | – | – | – |
| | – | – | – | – | – | – | – | – | – | – | – | – | – | – | – | – | – | – | – | – | – | – | – | – | – | – | – | – | – | – | – | – | 9 | 9 | 9 | 9 | – | – | – | – | 9 | 9 | 6.5 | 5.5 | – | – | – | – | 8.5 | 6 | 5 | 4 | – | – | – | – |
| | 9 | 4.5 | 3 | – | – | – | – | – | 6.5 | – | – | – | – | – | – | – | 9 | 8.5 | 7 | 5.5 | – | – | – | – | 9 | 8.5 | 7 | 5.5 | – | – | – | – | 9 | 9 | 9 | 9 | – | – | – | – | 9 | 9 | 7.5 | 6.5 | – | – | – | – | 9 | 8 | 6.5 | 5 | – | – | – | – |
| | 9 | 8 | – | – | – | – | – | – | 9 | – | – | – | – | – | – | – | 9 | 9 | 9 | 6 | – | – | – | – | 9 | 9 | 7.5 | 6 | – | – | – | – | 9 | 9 | – | – | – | – | – | – | 9 | 9 | – | – | – | – | – | – | 9 | 8 | – | – | – | – | – | – |
| 13'-0" | 9 | 4 | – | – | – | – | – | – | 4 | – | – | – | – | – | – | – | 9 | 6.5 | – | – | – | – | – | – | 9 | 6.5 | – | – | – | – | – | – | 9 | 9 | – | – | – | – | – | – | – | – | – | – | – | – | – | – | 9 | 9 | – | – | – | – | – | – |
| | – | – | – | – | – | – | – | – | – | – | – | – | – | – | – | – | – | – | – | – | – | – | – | – | – | – | – | – | – | – | – | – | 9 | 9 | – | – | – | – | – | – | 9 | 8 | – | – | – | – | – | – | 7.5 | 5.5 | – | – | – | – | – | – |
| | 8 | 4 | – | – | – | – | – | – | 4.5 | – | – | – | – | – | – | – | 9 | 8 | – | – | – | – | – | – | 9 | 8 | – | – | – | – | – | – | 9 | 9 | – | – | – | – | – | – | 9 | 9 | – | – | – | – | – | – | 9 | 7 | – | – | – | – | – | – |
| | 9 | 5 | – | – | – | – | – | – | 5 | – | – | – | – | – | – | – | 9 | 8.5 | – | – | – | – | – | – | 9 | 8.5 | – | – | – | – | – | – | 9 | 9 | – | – | – | – | – | – | 9 | 9 | – | – | – | – | – | – | 9 | 7 | – | – | – | – | – | – |

FLORIDA BUILDING CODE (**H**igh **V**elocity **H**urricane **Z**one)

PRODUCT REVISED
as complying with the Florida Building Code
Acceptance No 13-0514.03
Expiration Date 09/22/2016
By
Miami Dade Product Control

MIAMI-DADE COUNTY

WALTER A. TILLIT JR. LICENSE No. 44167 STATE OF FLORIDA PROFESSIONAL ENGINEER

P.E. SEAL/SIGNATURE/DATE


TILTECO INC.

TILLIT TESTING & ENGINEERING COMPANY
6355 N.W. 36th. St., Ste. 305, VIRGINIA GARDENS, FLORIDA 33166
Phone : (305)871-1530 . Fax : (305)871-1531
e-mail: tilteco@aol.com
EB-0006719
WALTER A. TILLIT Jr. P.E.
FLORIDA Lic. # 44167


**JC IMPACT SHUTTERS & GLASS, INC.**

(ASSA # 43)

9465 N.W. 109 STREET, # 107
MEDLEY, FL 33178

PH: (305) 863-2727, FAX: (305) 889-1983


© 2013 EASTERN METAL SUPPLY, INC.


**BERTHA HV™**
Accordion Shutter System
H.V. BLADE #3 W/ OR W/O H.V. WINDOW BLADE #3

| REV. No | DESCRIPTION | DATE | DRAWN BY: A.G. |
|---|---|---|---|
| 1 | OLD 12-053 | 04/18/13 | DATE: 03/18/13 |
| 2 | | | DRAWING No |
| 3 | | | 13-025 |
| 4 | | | |
| 5 | | | SHEET |
| 6 | | | 7 OF 18 |

## MAXIMUM ANCHOR + SPACING (in.) SCHEDULE FOR A GIVEN MAX. SHUTTER SPAN, NEGATIVE A.S.D. DESIGN LOAD AND A CORRESPONDING MOUNTING TYPE.

(SEE MOUNTINGS ON SHEETS 14 & 15).

### SUBSTRATE: SOUTHERN PINE No. 2 W/ MIN. G=0.55, DOUGLAS FIR W/ MIN. G=0.50

| MAXIMUM SPAN (ft) | WALL MOUNTINGS 1W, 4W, 7W, 9W & 10W — A.S.D. DESIGN NEGATIVE LOAD (psf) | | | | | | | | | CEILING MOUNT 3W FLOOR MOUNTINGS 6W & 8W — A.S.D. DESIGN NEGATIVE LOAD (psf) | | | | | | | | |
|---|---|---|---|---|---|---|---|---|---|---|---|---|---|---|---|---|---|---|
| | 30 | 40 | 50 | 60 | 70 | 80 | 90 | 100 | 110 | 30 | 40 | 50 | 60 | 70 | 80 | 90 | 100 | 110 |
| 3'-0" OR LESS | 9 | 9 | 9 | 9 | 9 | 9 | 9 | 9 | 9 | 9 | 9 | 9 | 9 | 9 | 8 | 7 | 6.5 | 6 |
| 4'-0" | 9 | 9 | 9 | 9 | 9 | 9 | 9 | 9 | 8 | 9 | 9 | 9 | 8 | 7 | 6 | 5.5 | 5 | 4.5 |
| 5'-0" | 9 | 9 | 9 | 9 | 9 | 9 | 7.5 | 6 | 4.5 | 9 | 9 | 8 | 6.5 | 5.5 | 5 | 4 | 4 | 3.5 |
| 6'-0" | 9 | 9 | 9 | 9 | 9 | 8 | 5 | 4 | 3.5 | 9 | 8 | 6.5 | 5.5 | 4.5 | 4 | 3.5 | 3 | 3 |
| 7'-0" | 9 | 9 | 9 | 9 | 6 | 4.5 | – | – | – | 9 | 7 | 5.5 | 4.5 | 4 | 3.5 | – | – | – |
| 8'-0" | 9 | 9 | 9 | 6.5 | 4.5 | 4.5 | – | – | – | 8 | 6 | 5 | 4 | 2.5 | 3 | – | – | – |
| 9'-6" | 9 | 9 | 6 | 4 | 3.5 | – | – | – | – | 6.5 | 5 | 4 | 3 | 2.5 | – | – | – | – |
| 10'-0" | 9 | 9 | 6 | 4 | – | – | – | – | – | 6.5 | 5 | 4 | 3 | – | – | – | – | – |
| 11'-0" | 9 | 9 | 4.5 | 3 | – | – | – | – | – | 6 | 4.5 | 3.5 | 2.5 | – | – | – | – | – |
| 12'-0" | 9 | 9 | 3.5 | – | – | – | – | – | – | 5.5 | 4 | 3 | – | – | – | – | – | – |
| 13'-0" | 9 | 5.5 | 3.5 | – | – | – | – | – | – | 5 | 3.5 | 3 | – | – | – | – | – | – |

### SUBSTRATE: SPRUCE PINE FIR NORTH W/ MIN. G=0.43

| MAXIMUM SPAN (ft) | WALL MOUNTINGS 1W, 4W, 7W, 9W & 10W — A.S.D. DESIGN NEGATIVE LOAD (psf) | | | | | | | | | CEILING MOUNT 3W FLOOR MOUNTINGS 6W & 8W — A.S.D. DESIGN NEGATIVE LOAD (psf) | | | | | | | | |
|---|---|---|---|---|---|---|---|---|---|---|---|---|---|---|---|---|---|---|
| | 30 | 40 | 50 | 60 | 70 | 80 | 90 | 100 | 110 | 30 | 40 | 50 | 60 | 70 | 80 | 90 | 100 | 110 |
| 3'-0" OR LESS | 9 | 9 | 9 | 9 | 9 | 9 | 9 | 9 | 9 | 9 | 9 | 9 | 9 | 8 | 7 | 6 | 5.5 | 5 |
| 4'-0" | 9 | 9 | 9 | 9 | 9 | 9 | 9 | 9 | 9 | 9 | 9 | 8.5 | 7 | 6 | 5 | 4.5 | 4 | 3.5 |
| 5'-0" | 9 | 9 | 9 | 9 | 9 | 9 | 8 | 9 | 8 | 9 | 8.5 | 6.5 | 5.5 | 4.5 | 4 | 3.5 | 3 | 3 |
| 6'-0" | 9 | 9 | 9 | 9 | 6.5 | 4.5 | 9 | 8 | – | 9 | 7 | 5.5 | 4.5 | 4 | 3.5 | 3 | 2.5 | – |
| 7'-0" | 9 | 9 | 9 | 9 | 4.5 | 3.5 | – | – | – | 8 | 6 | 4.5 | 4 | 3.5 | 3 | – | – | – |
| 8'-0" | 9 | 9 | 8 | 8 | 3.5 | 2.5 | – | – | – | 7 | 5 | 4 | 3.5 | 3 | 2 | – | – | – |
| 9'-6" | 9 | 8 | 5.5 | 3 | 2.5 | – | – | – | – | 5.5 | 4 | 3 | 2.5 | 2.5 | – | – | – | – |
| 10'-0" | 9 | 8 | 4 | 2.5 | – | – | – | – | – | 5.5 | 4 | 3 | 2.5 | – | – | – | – | – |
| 11'-0" | 9 | 6 | 3.5 | – | – | – | – | – | – | 5 | 3.5 | 3 | 2 | – | – | – | – | – |
| 12'-0" | 9 | 4 | 2.5 | – | – | – | – | – | – | 4.5 | 3.5 | 2.5 | – | – | – | – | – | – |
| 13'-0" | 8.5 | 4 | 2.5 | – | – | – | – | – | – | 4 | 3 | – | – | – | – | – | – | – |

### SUBSTRATE: SPRUCE PINE FIR SOUTH W/ MIN. G=0.36

| MAXIMUM SPAN (ft) | WALL MOUNTINGS 1W, 4W, 7W, 9W & 10W — A.S.D. DESIGN NEGATIVE LOAD (psf) | | | | | | | | | CEILING MOUNT 3W FLOOR MOUNTINGS 6W & 8W — A.S.D. DESIGN NEGATIVE LOAD (psf) | | | | | | | | |
|---|---|---|---|---|---|---|---|---|---|---|---|---|---|---|---|---|---|---|
| | 30 | 40 | 50 | 60 | 70 | 80 | 90 | 100 | 110 | 30 | 40 | 50 | 60 | 70 | 80 | 90 | 100 | 110 |
| 3'-0" OR LESS | 9 | 9 | 9 | 9 | 9 | 9 | 9 | 9 | 9 | 9 | 8.5 | 7 | 5.5 | 5 | 4 | 3.5 | 3.5 | 3 |
| 4'-0" | 9 | 9 | 9 | 9 | 9 | 9 | 8 | 5.5 | 4 | 9 | 7 | 5.5 | 4.5 | 4 | 3.5 | 3 | 2.5 | 2.5 |
| 5'-0" | 9 | 9 | 9 | 9 | 9 | 5.5 | 4 | 3 | 2.5 | 9 | 7 | 5.5 | 4.5 | 4 | 3.5 | 3 | 2.5 | 2.5 |
| 6'-0" | 9 | 9 | 9 | 8 | 4.5 | 3 | 2.5 | – | – | 7.5 | 5.5 | 4.5 | 3.5 | 3 | 8 | 2.5 | 2 | – |
| 7'-0" | 9 | 9 | 9 | 4.5 | 3 | 2.5 | – | – | – | 6.5 | 5 | 4 | 3 | 2.5 | 2.5 | – | – | – |
| 8'-0" | 9 | 8 | 5.5 | 3 | 2.5 | – | – | – | – | 5.5 | 4 | 3.5 | 2.5 | 2 | 2 | – | – | – |
| 9'-6" | 9 | 5.5 | 3 | 2.5 | – | – | – | – | – | 4.5 | 3.5 | 2.5 | 2 | 2 | – | – | – | – |
| 10'-0" | 9 | 5.5 | 3 | – | – | – | – | – | – | 4.5 | 3.5 | 2.5 | 2 | – | – | – | – | – |
| 11'-0" | 9 | 4 | 2.5 | – | – | – | – | – | – | 4 | 3 | 2 | – | – | – | – | – | – |
| 12'-0" | 8 | 3 | – | – | – | – | – | – | – | 4 | 2.5 | – | – | – | – | – | – | – |
| 13'-0" | 6 | 2.5 | – | – | – | – | – | – | – | 3.5 | 2.5 | – | – | – | – | – | – | – |

### SUBSTRATE: 1/2" MIN. CDX PLYWOOD

| MAXIMUM SPAN (ft) | WALL MOUNTING 5W — A.S.D. DESIGN NEGATIVE LOAD (psf) | | | |
|---|---|---|---|---|
| | 30 | 40 | 50 | 62 |
| 3'-0" OR LESS | 9 | 9 | 9 | 9 |
| 4'-0" | 9 | 9 | 9 | 9 |
| 5'-0" | 9 | 9 | 9 | 9 |
| 6'-0" | 9 | 9 | 9 | 4.5 |
| 7'-0" | 9 | 9 | 6.5 | 2.5 |
| 8'-0" | 9 | 9 | 3.5 | 2 |
| 9'-6" | 9 | 4.5 | 2 | – |
| 10'-0" | – | – | – | – |
| 11'-0" | – | – | – | – |
| 12'-0" | – | – | – | – |
| 13'-0" | – | – | – | – |

### + NOTES ON ANCHORS REQUIREMENTS: WOOD SUBSTRATES.

1. ANCHORS TO WALL, FLOOR OR SOLID WOOD SOFFIT SHALL BE AS FOLLOWS:
   – 1/4"ø TAPCON OR TAPCON W/ ADVANCED THREADFORM TECHNOLOGY ANCHORS, AS MANUFACTURED BY I.T.W. BUILDEX W/ MINIMUM PENETRATION OF THREADED AREA AS INDICATED AT EACH SECTION ON SHEETS 14 & 15.
   EXCEPTION: SEE NOTE 2 BELOW.
2. ANCHORS TO HOLLOW CEILING SHALL BE AS PER MOUNTING TYPE 2W, SHEET 14 AND SHALL CONSIST OF LAG SCREWS AS PER NDS 2005 SPECIFICATIONS.
3. SUBSTRATE SHALL CONSIST OF THE FOLLOWING:
   –SOUTHERN PINE No. 2 W/ G=0.55 (N.D.S)
   –DOUGLAS FIR W/ G=0.50 (N.D.S.)
   –SPRUCE PINE FIR NORTH W/ G=0.43 (N.D.S.)
   –SPRUCE PINE FIR SOUTH W/ G=0.36 (N.D.S.)
   –MIN. 1/2" CDX PLYWOOD (1986 APA)
4. ANCHORS SHALL BE INSTALLED FOLLOWING ALL OF THE RECOMMENDATIONS AND SPECIFICATIONS PER NDS 2005

## (1) HV BLADE #3 OR (1) HV BLADE #3 W/ (1A) HV WINDOW BLADE #3 WORKING IN UNISON ◆

◆ SEE LIMITATIONS OF USE FOR BLADE (1A) ON SHEET 18.

FLORIDA BUILDING CODE (**H**igh **V**elocity **H**urricane **Z**one)

PRODUCT REVISED
as complying with the Florida Building Code
Acceptance No 13-0514.03
Expiration Date 9/22/2016
By
Miami Dade Product Control

MIAMI–DADE COUNTY

WALTER A. TILLIT JR. LICENSE No. 44167 STATE OF FLORIDA PROFESSIONAL ENGINEER

P.E. SEAL/SIGNATURE/DATE


TILTECO INC.
TILLIT TESTING & ENGINEERING COMPANY
6355 N.W. 36th. St., Ste. 305, VIRGINIA GARDENS, FLORIDA 33166
Phone : (305)871–1530 . Fax : (305)871–1531
e–mail: tilteco@aol.com
EB–0006719
WALTER A. TILLIT Jr. P.E.
FLORIDA Lic. # 44167


**JC IMPACT SHUTTERS & GLASS, INC.**
(ASSA # 43)
9465 N.W. 109 STREET, # 107
MEDLEY, FL 33178
PH: (305) 863–2727, FAX: (305) 889–1983

© 2013 EASTERN METAL SUPPLY, INC.

**BERTHA HV™**
Accordion Shutter System
H.V. BLADE #3 W/ OR W/O H.V. WINDOW BLADE #3

| REV. No | DESCRIPTION | DATE | DRAWN BY: A.G. |
|---|---|---|---|
| 1 | OLD 12–053 | 04/18/13 | DATE: 03/18/13 |
| 2 | | | DRAWING No 13–025 |
| 3 | | | |
| 4 | | | |
| 5 | | | SHEET 8 OF 18 |
| 6 | | | |

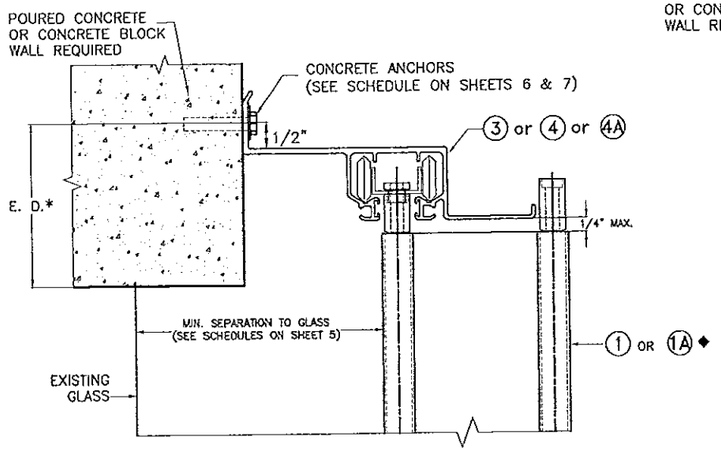


① WALL MOUNTING INSTALLATION

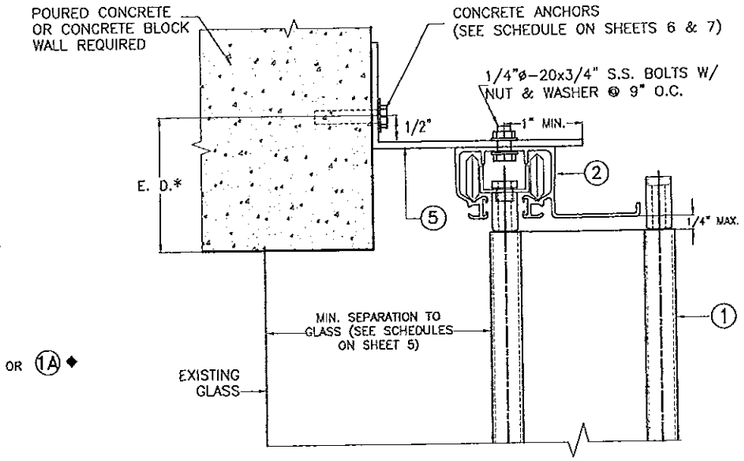


③ WALL MOUNTING INSTALLATION

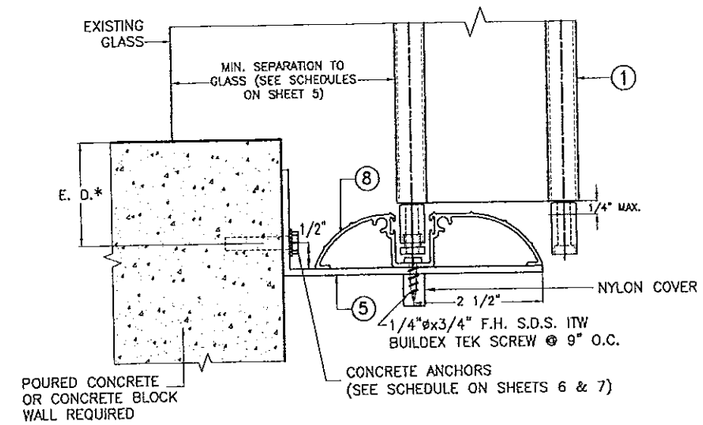


⑤ WALL MOUNTING INSTALLATION

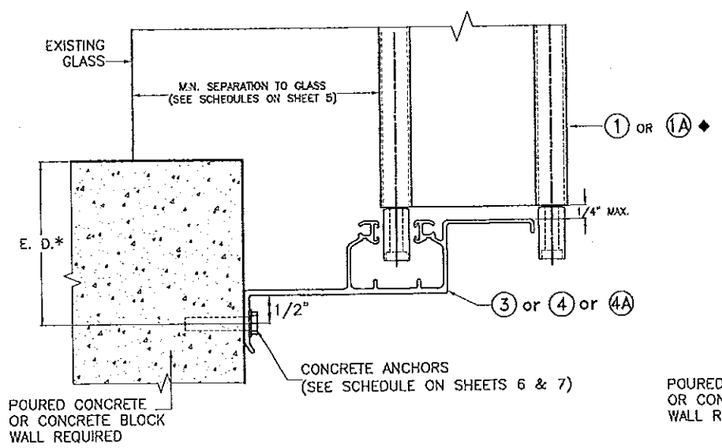


② WALL MOUNTING INSTALLATION

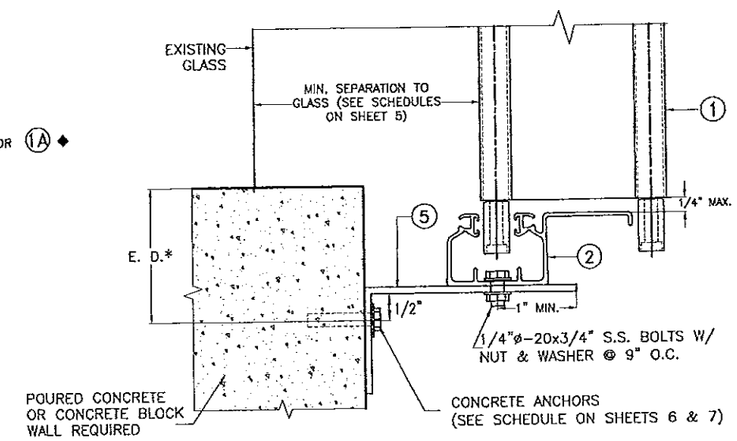


④ WALL MOUNTING INSTALLATION

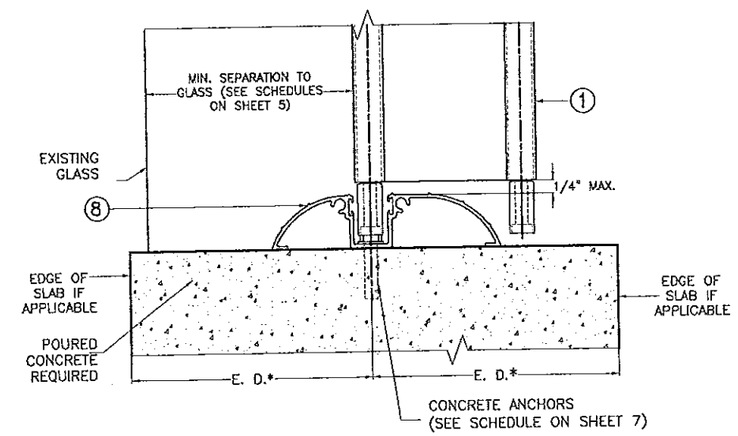


⑥ FLOOR MOUNTING INSTALLATION

NOTE FOR COMBINATION OF SECTIONS:

1- SEE SHEET 3 FOR TYPICAL SHUTTER ASSEMBLY
2- MOUNTING SECTIONS CAN BE COMBINED IN ANY WAY TO SUIT ANY INSTALLATION.

* E.D. = EDGE DISTANCE (SEE NOTES & SCHEDULE ON SHEET 7)

◆ SEE LIMITATIONS OF USE FOR BLADE ①A ON SHEET 18.

# INSTALLATION DETAILS

SCALE 3/8"=1"

FLORIDA BUILDING CODE (**H**igh **V**elocity **H**urricane **Z**one)

PRODUCT REVISED
as complying with the Florida Building Code
Acceptance No 13-0514.03
Expiration Date 03/22/2016
By
Miami Dade Product Control

MIAMI-DADE COUNTY

WALTER A. TILLIT JR. LICENSE No. 44167 STATE OF FLORIDA PROFESSIONAL ENGINEER

P.E. SEAL/SIGNATURE/DATE


TILTECO INC.

TILLIT TESTING & ENGINEERING COMPANY
6355 N.W. 36th. St., Ste. 305, VIRGINIA GARDENS, FLORIDA 33166
Phone : (305)871-1530 . Fax : (305)871-1531
e-mail: tilteco@aol.com
EB-0006719
WALTER A. TILLIT Jr. P.E.
FLORIDA Lic. # 44167


**JC IMPACT SHUTTERS & GLASS, INC.**

(ASSA # 43)

9465 N.W. 109 STREET, # 107
MEDLEY, FL 33178

PH: (305) 863-2727, FAX: (305) 889-1983

© 2013 EASTERN METAL SUPPLY, INC.

**BERTHA HV™**
Accordion Shutter System
H.V. BLADE #3 W/ OR W/O H.V. WINDOW BLADE #3

| REV. No | DESCRIPTION | DATE | DRAWN BY: A.G. |
|---|---|---|---|
| 1 | OLD 12-053 | 03/18/13 | DATE: 03/18/13 |
| 2 | | | DRAWING No |
| 3 | | | 13-025 |
| 4 | | | |
| 5 | | | SHEET |
| 6 | | | 9 OF 18 |

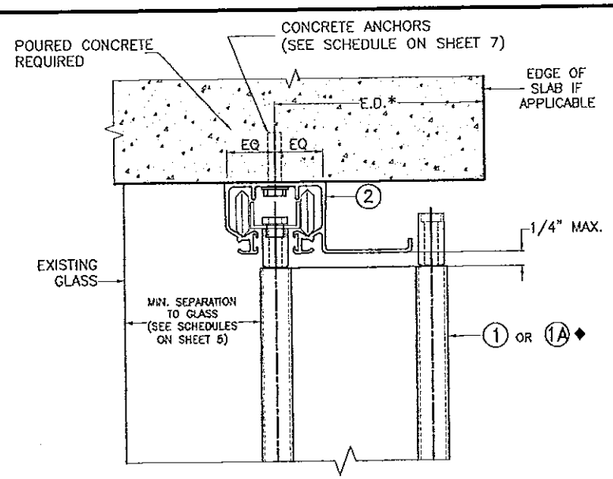


## ⑦ CEILING MOUNTING INSTALLATION

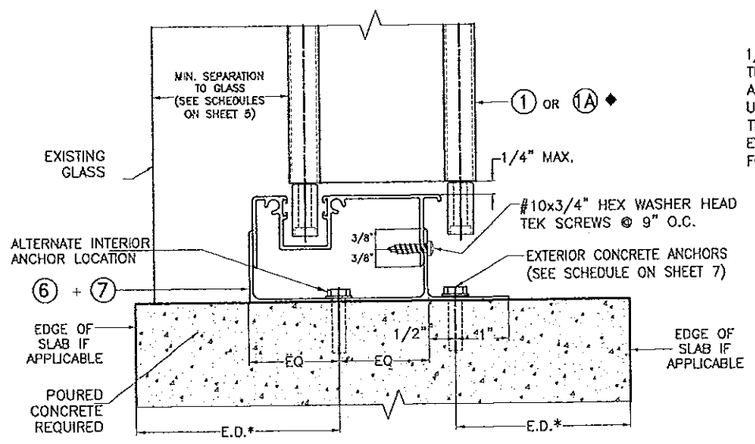


## ⑧ FLOOR MOUNTING INSTALLATION Ω

Ω NOTE: THIS INSTALLATION SHALL BE REMOVABLE WHEN PERFORMED ADJACENT TO AN OPERABLE EXIT OR ENTRANCE

NOTE FOR COMBINATION OF SECTIONS:

1- SEE SHEET 3 FOR TYPICAL SHUTTER ASSEMBLY
2- MOUNTING SECTIONS CAN BE COMBINED IN ANY WAY TO SUIT ANY INSTALLATION.

* E.D. = EDGE DISTANCE (SEE NOTES & SCHEDULE ON SHEET 7)

◆ SEE LIMITATIONS OF USE FOR BLADE 1A ON SHEET 18.

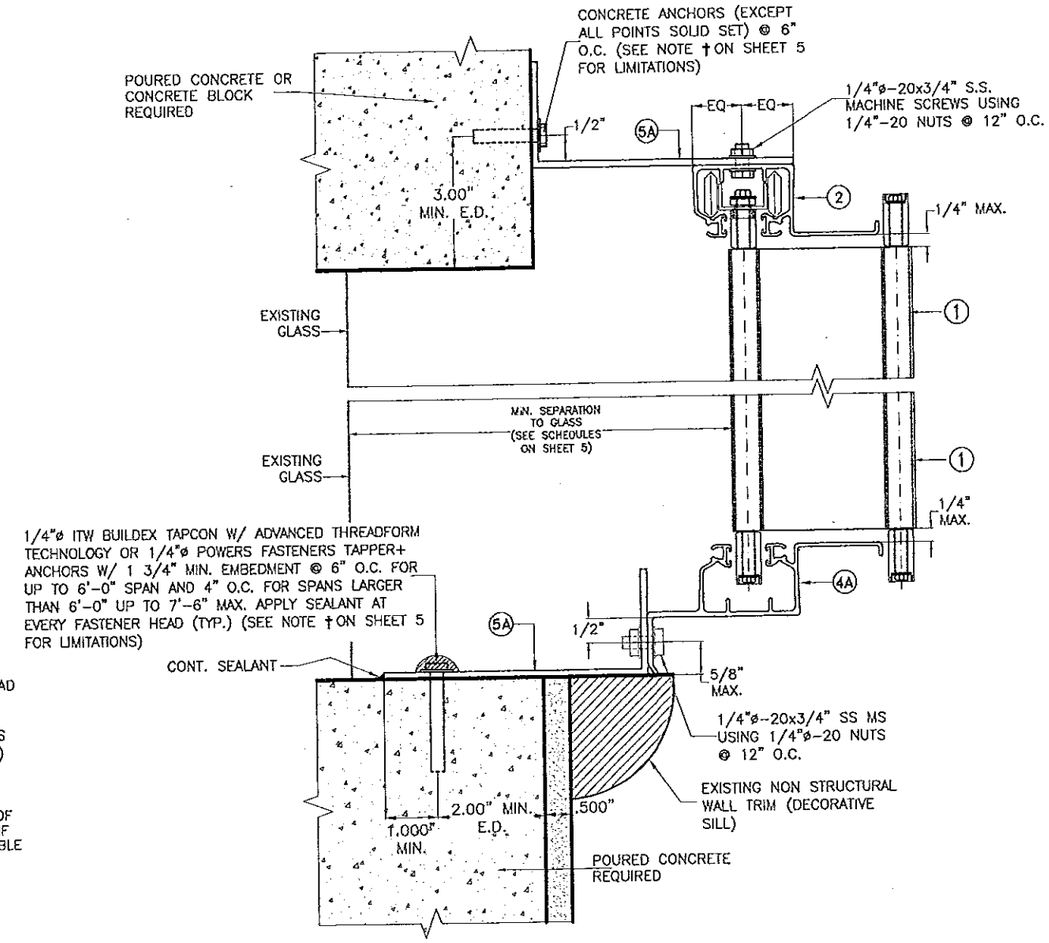


## ⑨ KEYSTONE MOUNTING INSTALLATION

MAXIMUM DESIGN PRESSURE: +64,-72 psf
MAXIMUM SHUTTER SPAN 7'-6"

# INSTALLATION DETAILS (CONTINUED)

SCALE 3/8"=1"

FLORIDA BUILDING CODE (High Velocity Hurricane Zone)

PRODUCT REVISED
as complying with the Florida Building Code
Acceptance No 13-0514.03
Expiration Date 03/22/2016
By
Miami Dade Product Control

MIAMI-DADE COUNTY

WALTER A. TILLIT JR. LICENSE No. 44167 STATE OF FLORIDA PROFESSIONAL ENGINEER

P.E. SEAL/SIGNATURE/DATE

TILTECO INC.
TILLIT TESTING & ENGINEERING COMPANY
6355 N.W. 36th. St., Ste. 305, VIRGINIA GARDENS, FLORIDA 33166
Phone : (305)871-1530 . Fax : (305)871-1531
e-mail: tilteco@aol.com
EB-0006719
WALTER A. TILLIT Jr. P.E.
FLORIDA Lic. # 44167

JC IMPACT SHUTTERS & GLASS, INC.
(ASSA # 43)
9465 N.W. 109 STREET, # 107
MEDLEY, FL 33178
PH: (305) 863-2727, FAX: (305) 889-1983

© 2013 EASTERN METAL SUPPLY, INC.

**BERTHA HV™**
Accordion Shutter System
H.V. BLADE #3 W/ OR W/O H.V. WINDOW BLADE #3

| REV. No | DESCRIPTION | DATE | DRAWN BY: A.G. |
|---|---|---|---|
| 1 | OLD 12-053 | 03/18/13 | DATE: 03/18/13 |
| 2 | SPANS | 03/18/13 | DRAWING No 13-025 |
| 3 | | | |
| 4 | | | |
| 5 | | | SHEET 10 OF 18 |
| 6 | | | |

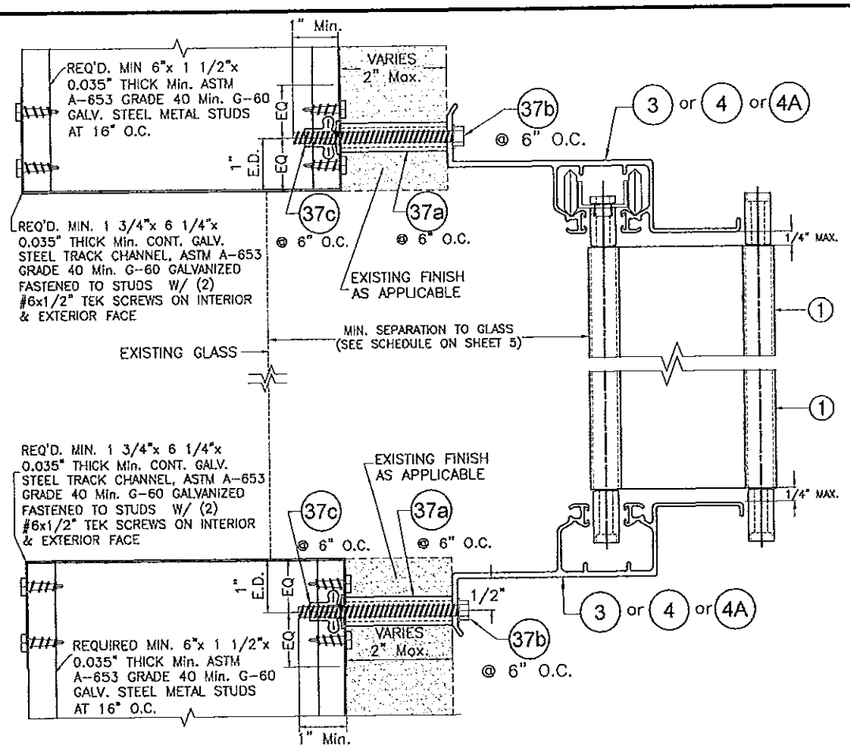


## (10) B.O. WALL MOUNTING INSTALLATION

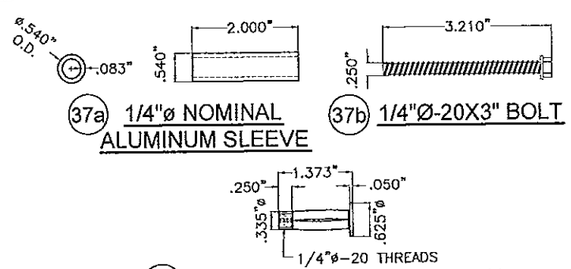


## INSTALLATION DETAILS (CONTINUED)

SCALE 3/8"=1"

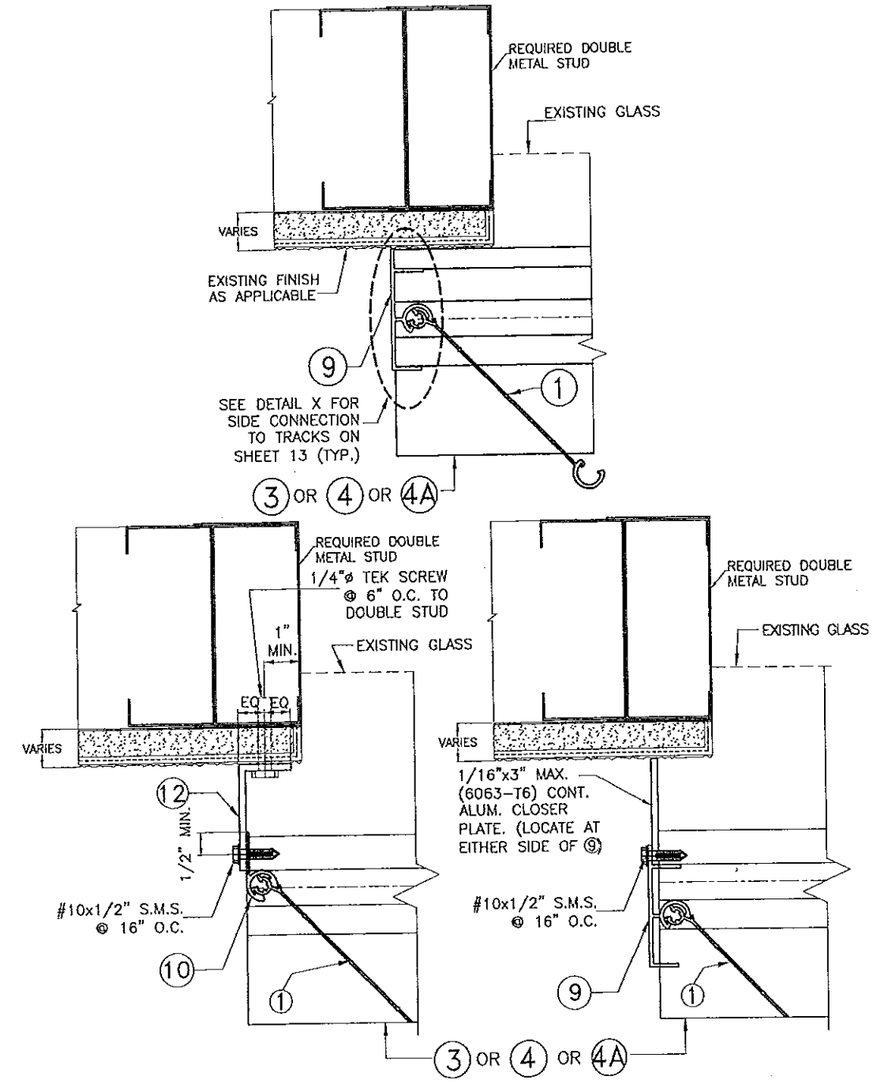


## END INSTALLATION INTO METAL STUD WALL

SCALE 3/8"=1"

FLORIDA BUILDING CODE (**H**igh **V**elocity **H**urricane **Z**one)

PRODUCT REVISED
as complying with the Florida Building Code
Acceptance No 13-0514.03
Expiration Date 9/22/2016
By
Miami Dade Product Control

MIAMI-DADE COUNTY

WALTER A. TILLIT JR. LICENSE No. 44167 STATE OF FLORIDA PROFESSIONAL ENGINEER

P.E. SEAL/SIGNATURE/DATE


TILTECO INC.

TILLIT TESTING & ENGINEERING COMPANY
6355 N.W. 36th. St., Ste. 305, VIRGINIA GARDENS, FLORIDA 33166
Phone : (305)871-1530 . Fax : (305)871-1531
e-mail: tilteco@aol.com
EB-0006719
WALTER A. TILLIT Jr. P.E.
FLORIDA Lic. # 44167

**JC IMPACT SHUTTERS & GLASS, INC.**
(ASSA # 43)
9465 N.W. 109 STREET, # 107
MEDLEY, FL 33178
PH: (305) 863-2727, FAX: (305) 889-1983


© 2013 EASTERN METAL SUPPLY, INC.

**BERTHA HV™**
Accordion Shutter System
H.V. BLADE #3 W/ OR W/O H.V. WINDOW BLADE #3

| REV. No | DESCRIPTION | DATE | DRAWN BY: A.G. |
|---|---|---|---|
| 1 | OLD 12-053 | 03/18/13 | DATE: 03/18/13 |
| 2 | | | DRAWING No |
| 3 | | | 13-025 |
| 4 | | | |
| 5 | | | SHEET |
| 6 | | | 10A OF 18 |

# INSTALLATION WITH (1) OR (1A)◆ HV BLADE W/ HV CENTERMATES (13) & (14)

SCALE 3/8"=1"

* SEE NOTES ON HV LOCK (15) AND ALTERNATE LOCKS (16) OR (17), ON SHEET 4.

◆ SEE LIMITATIONS OF USE FOR BLADE (1A) ON SHEET 18.

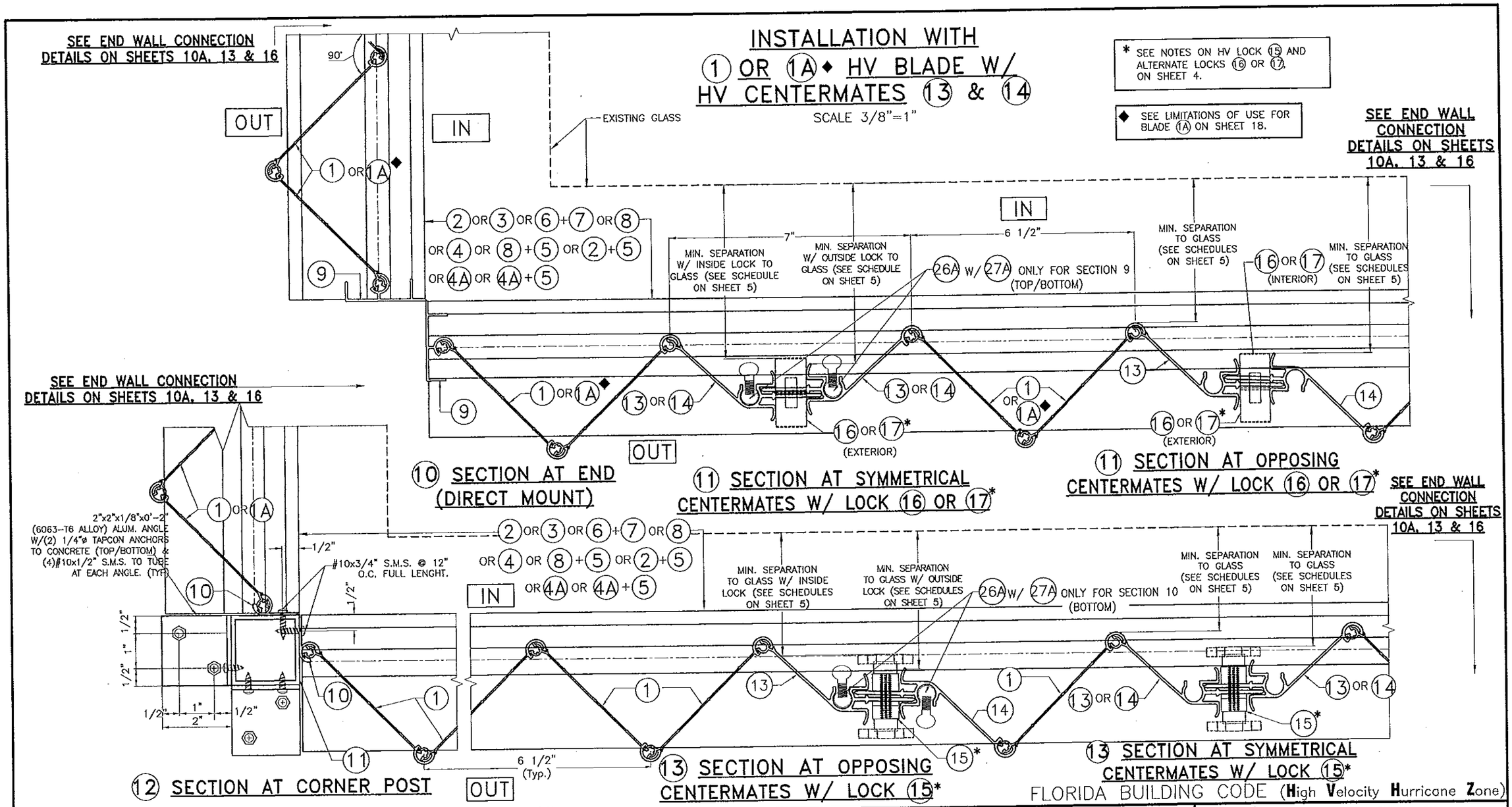





FLORIDA BUILDING CODE (**H**igh **V**elocity **H**urricane **Z**one)

© 2013 EASTERN METAL SUPPLY, INC.

PRODUCT REVISED
as complying with the Florida Building Code
Acceptance No 13-0514.03
Expiration Date 9/22/2016
By
Miami Dade Product Control

MIAMI-DADE COUNTY

WALTER A. TILLIT JR. LICENSE No. 44167 STATE OF FLORIDA PROFESSIONAL ENGINEER
9/2/13

P.E. SEAL/SIGNATURE/DATE

TILTECO INC.
TILLIT TESTING & ENGINEERING COMPANY
6355 N.W. 36th. St., Ste. 305, VIRGINIA GARDENS, FLORIDA 33166
Phone : (305)871-1530 . Fax : (305)871-1531
e-mail: tilteco@aol.com
EB-0006719
WALTER A. TILLIT Jr. P.E.
FLORIDA Lic. # 44167

**JC IMPACT SHUTTERS & GLASS, INC.**
(ASSA # 43)
9465 N.W. 109 STREET, # 107
MEDLEY, FL 33178
PH: (305) 863-2727, FAX: (305) 889-1983

**BERTHA HV™**
Accordion Shutter System
H.V. BLADE #3 W/ OR W/O H.V. WINDOW BLADE #3

| REV. No | DESCRIPTION | DATE | DRAWN BY: A.G. |
|---|---|---|---|
| 1 | OLD 12-053 | 03/18/13 | DATE: 03/18/13 |
| 2 | | | DRAWING No 13-025 |
| 3 | | | |
| 4 | | | |
| 5 | | | SHEET 11 OF 18 |
| 6 | | | |

# INSTALLATION WITH (1) HV BLADE W/ HV "T" LOCK CENTERMATES (18) & (19)

SCALE 3/8"=1"

† SERIES 9444 ALUMINUM (2024-T3 ALLOY) LARGE FLANGE THIN SHEET NUTSERT, PART # 0820, AS MANUFACTURED BY AVDEL CHERRY TEXTORN, PARSIPPENY, NEW JERSEY 07054 OR EQUAL.

* SEE NOTES ON HV "T" LOCKS (21) ON SHEET 4.

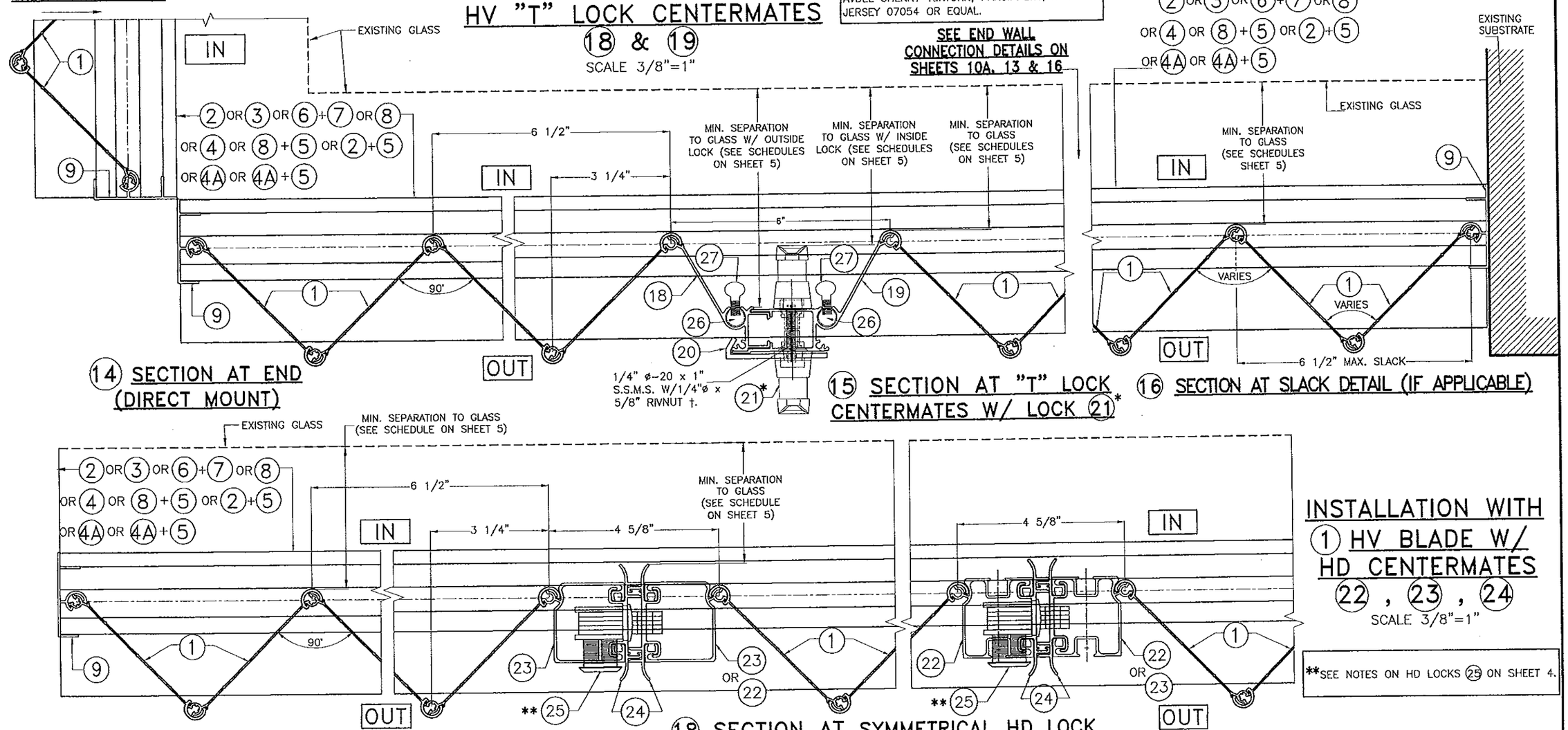


(14) SECTION AT END (DIRECT MOUNT)

(15) SECTION AT "T" LOCK CENTERMATES W/ LOCK (21)*

(16) SECTION AT SLACK DETAIL (IF APPLICABLE)




(17) SECTION AT END (DIRECT MOUNT)

(18) SECTION AT SYMMETRICAL HD LOCK CENTERMATES W/ HD LOCK (25)*

# INSTALLATION WITH (1) HV BLADE W/ HD CENTERMATES (22), (23), (24)

SCALE 3/8"=1"

**SEE NOTES ON HD LOCKS (25) ON SHEET 4.

FLORIDA BUILDING CODE (**H**igh **V**elocity **H**urricane **Z**one)

PRODUCT REVISED
as complying with the Florida Building Code
Acceptance No 13-0514.03
Expiration Date 09/22/2016
By
Miami Dade Product Control

MIAMI-DADE COUNTY

WALTER A. TILLIT JR. LICENSE No. 44167 STATE OF FLORIDA PROFESSIONAL ENGINEER

P.E. SEAL/SIGNATURE/DATE


TILTECO INC.

TILLIT TESTING & ENGINEERING COMPANY
6355 N.W. 36th. St., Ste. 305, VIRGINIA GARDENS, FLORIDA 33166
Phone : (305)871-1530 . Fax : (305)871-1531
e-mail: tilteco@aol.com
EB-0006719
WALTER A. TILLIT Jr. P.E.
FLORIDA Lic. # 44167

**JC IMPACT SHUTTERS & GLASS, INC.**
(ASSA # 43)
9465 N.W. 109 STREET, # 107
MEDLEY, FL 33178
PH: (305) 863-2727, FAX: (305) 889-1983


© 2013 EASTERN METAL SUPPLY, INC.

**BERTHA HV™**
Accordion Shutter System
H.V. BLADE #3 W/ OR W/O H.V. WINDOW BLADE #3

| REV. No | DESCRIPTION | DATE | DRAWN BY: A.G. |
|---|---|---|---|
| 1 | OLD 12-053 | 03/18/13 | DATE: 03/18/13 |
| 2 | | | DRAWING No |
| 3 | | | 13-025 |
| 4 | | | |
| 5 | | | SHEET |
| 6 | | | 12 OF 18 |

# END INSTALLATION INTO CONCRETE OR CONCRETE BLOCK WALL◆

SCALE 3/8"=1"

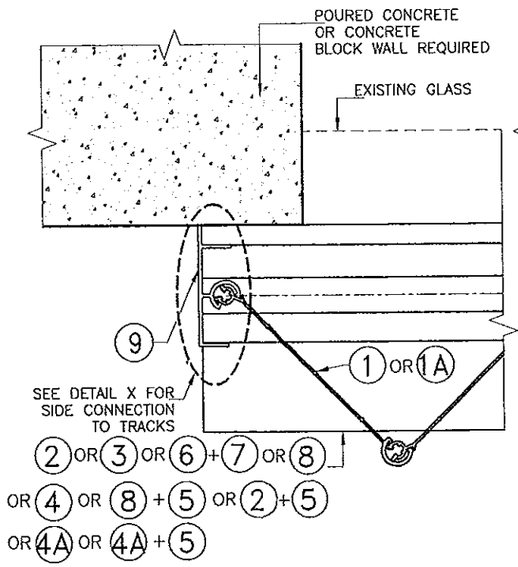


1 END CONNECTION DETAIL

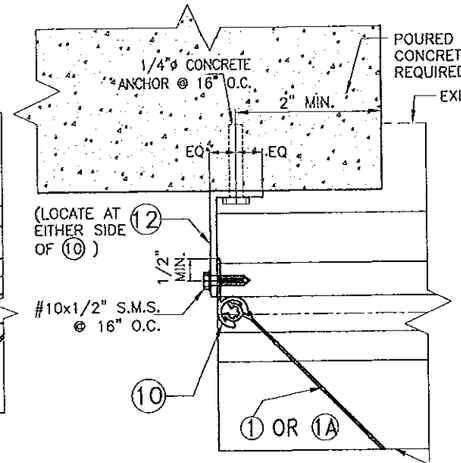


2 END CONNECTION DETAIL

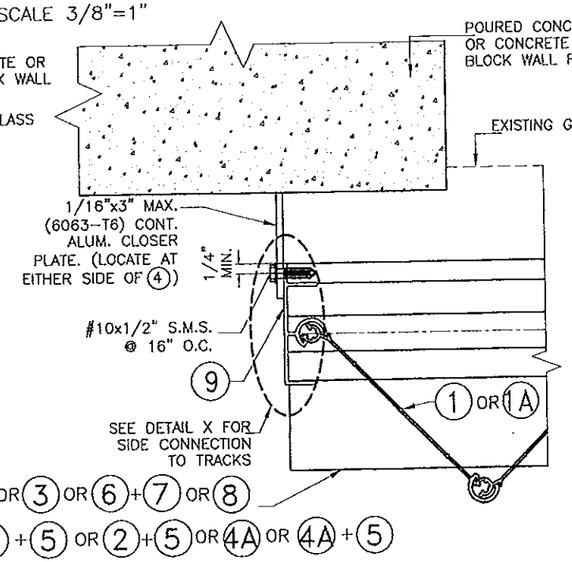


3 END CONNECTION DETAIL

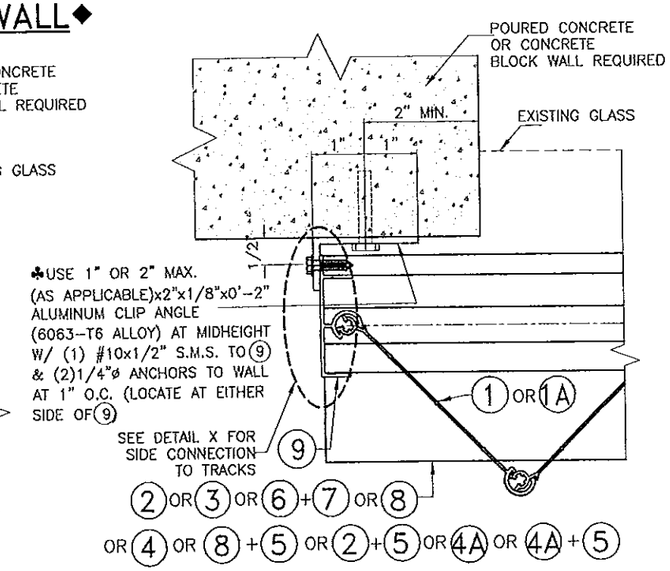


4 END CONNECTION DETAIL

♣ REQUIRED ONLY FOR SPANS GREATER THAN 12'-0"

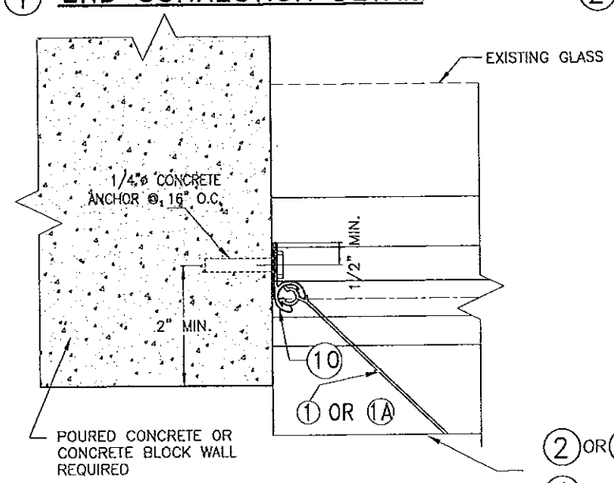


5 END CONNECTION DETAIL

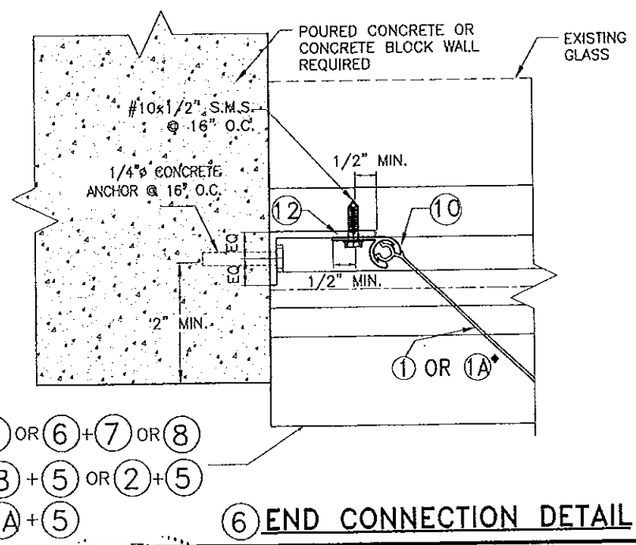


6 END CONNECTION DETAIL

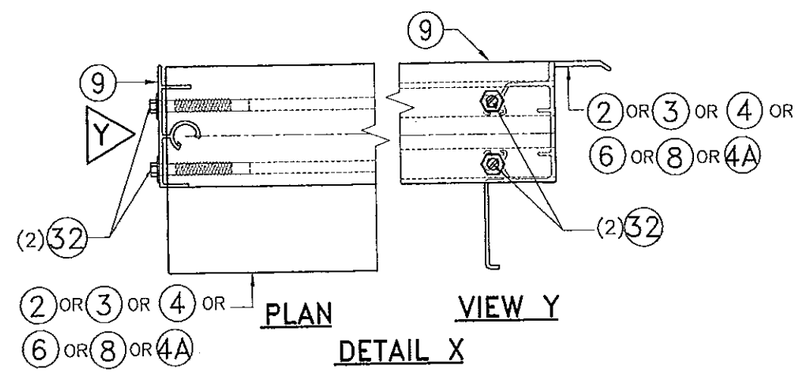


◆ SEE LIMITATIONS OF USE FOR BLADE 1A ON SHEET 18.

FLORIDA BUILDING CODE (**H**igh **V**elocity **H**urricane **Z**one)

PRODUCT REVISED
as complying with the Florida Building Code
Acceptance No 13-0514.03
Expiration Date 04/22/2016
By
Miami Dade Product Control

MIAMI-DADE COUNTY

WALTER A. TILLIT JR. LICENSE NO. 44167 STATE OF FLORIDA PROFESSIONAL ENGINEER
4/23/13

P.E. SEAL/SIGNATURE/DATE


TILTECO INC.
TILLIT TESTING & ENGINEERING COMPANY
6355 N.W. 36th. St., Ste. 305, VIRGINIA GARDENS, FLORIDA 33166
Phone : (305)871-1530 . Fax : (305)871-1531
e-mail: tilteco@aol.com
EB-0006719
WALTER A. TILLIT Jr. P.E.
FLORIDA Lic. # 44167


**JC IMPACT SHUTTERS & GLASS, INC.**
(ASSA # 43)
9465 N.W. 109 STREET, # 107
MEDLEY, FL 33178
PH: (305) 863-2727, FAX: (305) 889-1983

© 2013 EASTERN METAL SUPPLY, INC.

**BERTHA HV™**
Accordion Shutter System
H.V. BLADE #3 W/ OR W/O H.V. WINDOW BLADE #3

| REV. No | DESCRIPTION | DATE | DRAWN BY: A.G. |
|---|---|---|---|
| 1 | OLD 12-053 | 03/18/13 | DATE: 03/18/13 |
| 2 | | | DRAWING No |
| 3 | | | 13-025 |
| 4 | | | |
| 5 | | | SHEET |
| 6 | | | 13 OF 18 |

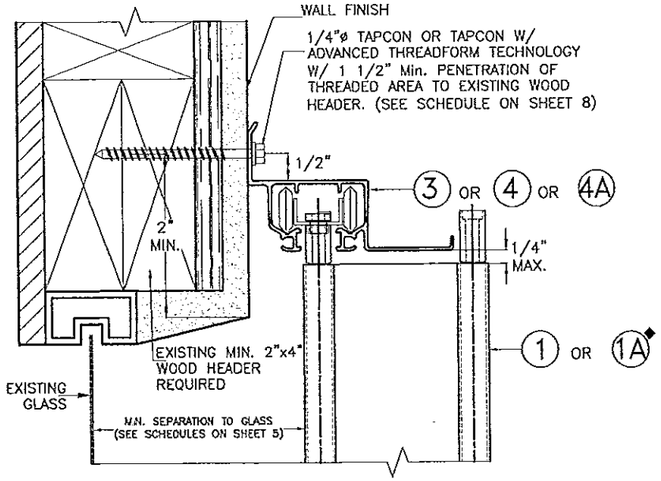


1W WALL CONNECTION AT TOP

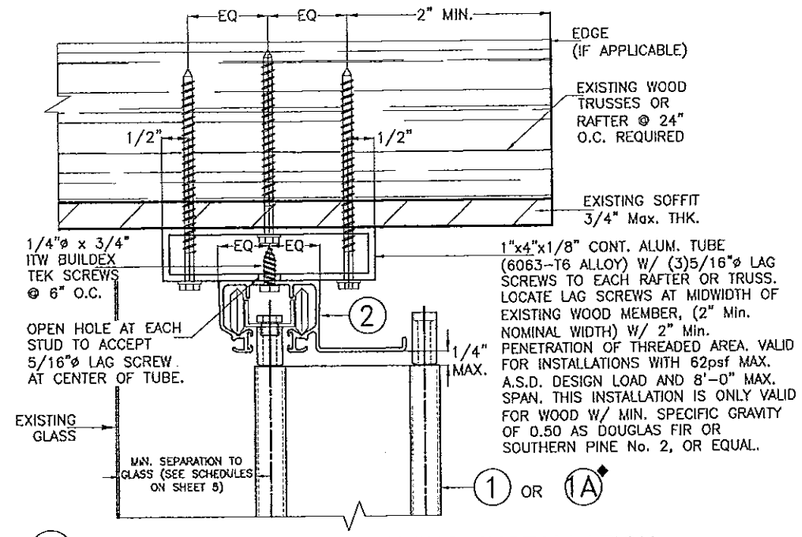


2W HOLLOW CEILING MOUNTING INSTALLATION

MAXIMUM DESIGN PRESSURE: ±62 psf
MAXIMUM SHUTTER SPAN 8'-0"

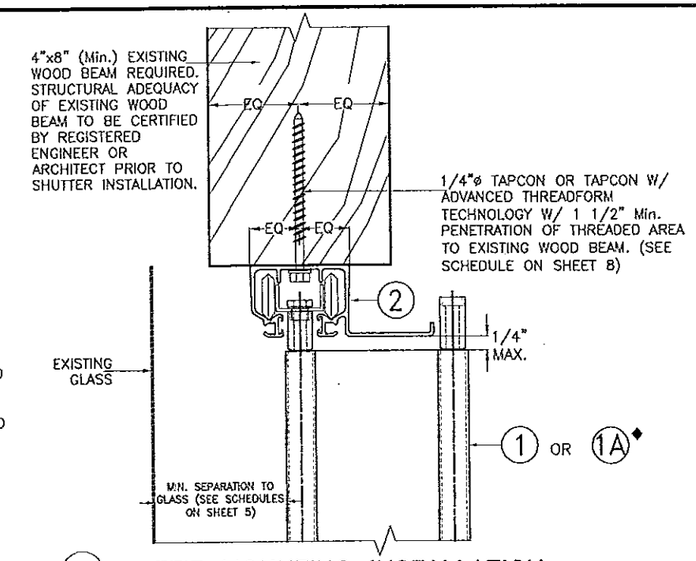


3W SOFFIT MOUNTING INSTALLATION

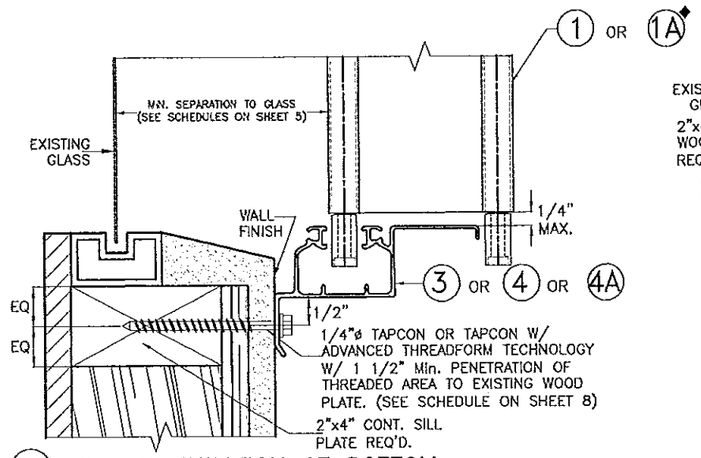


4W WALL CONNECTION AT BOTTOM

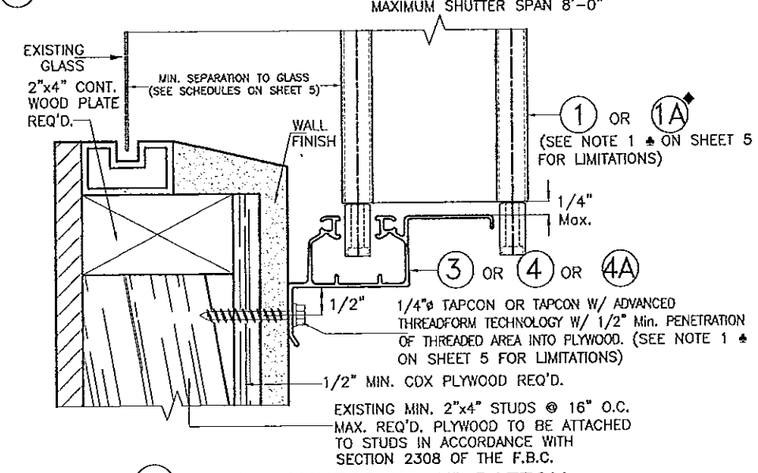


5W WALL CONNECTION AT BOTTOM

MAXIMUM DESIGN PRESSURE: ±62 psf
MAXIMUM SHUTTER SPAN 8'-11"

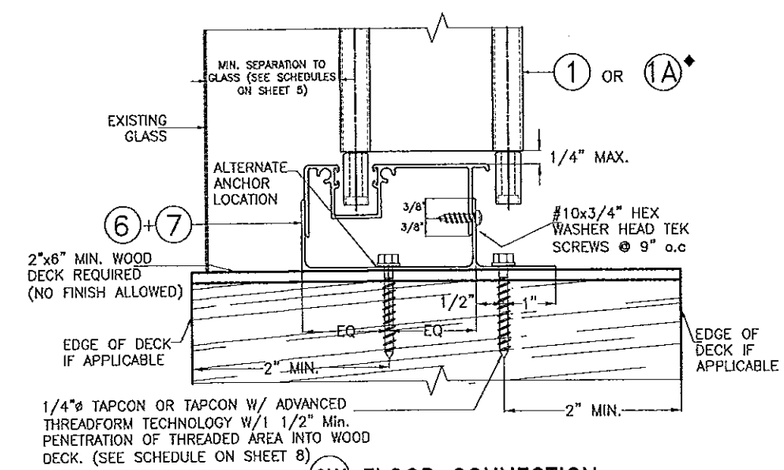


6W FLOOR CONNECTION

**NOTE:**
1-SEE SHEET 3 FOR TYPICAL SHUTTER ASSEMBLY

2-MOUNTING SECTIONS CAN BE COMBINED IN ANY WAY TO SUIT ANY INSTALLATION.

◆SEE LIMITATIONS OF USE FOR BLADE 1A ON SHEET 18.

# INSTALLATION DETAILS ON EXISTING WOOD BUILDINGS

SCALE 3/8"=1"

FLORIDA BUILDING CODE (**H**igh **V**elocity **H**urricane **Z**one)

PRODUCT REVISED
as complying with the Florida Building Code
Acceptance No 13-0514.03
Expiration Date 09/22/2016
By
Miami Dade Product Control

MIAMI-DADE COUNTY

WALTER A. TILLIT JR. LICENSE No. 44167 STATE OF FLORIDA PROFESSIONAL ENGINEER

P.E. SEAL/SIGNATURE/DATE


TILTECO INC.

TILLIT TESTING & ENGINEERING COMPANY
6355 N.W. 36th. St., Ste. 305, VIRGINIA GARDENS, FLORIDA 33166
Phone : (305)871-1530 . Fax : (305)871-1531
e-mail: tilteco@aol.com
EB-0006719
WALTER A. TILLIT Jr. P.E.
FLORIDA Lic. # 44167

**JC IMPACT SHUTTERS & GLASS, INC.**
(ASSA # 43)
9465 N.W. 109 STREET, # 107
MEDLEY, FL 33178
PH: (305) 863-2727, FAX: (305) 889-1983


© 2013 EASTERN METAL SUPPLY, INC.

**BERTHA HV™**
Accordion Shutter System
H.V. BLADE #3 W/ OR W/O H.V. WINDOW BLADE #3

| REV. No | DESCRIPTION | DATE | DRAWN BY: A.G. |
|---|---|---|---|
| 1 | OLD 12-053 | 03/18/13 | DATE: 03/18/13 |
| 2 | SPANS | 03/18/13 | DRAWING No 13-025 |
| 3 | | | |
| 4 | | | |
| 5 | | | SHEET 14 OF 18 |
| 6 | | | |

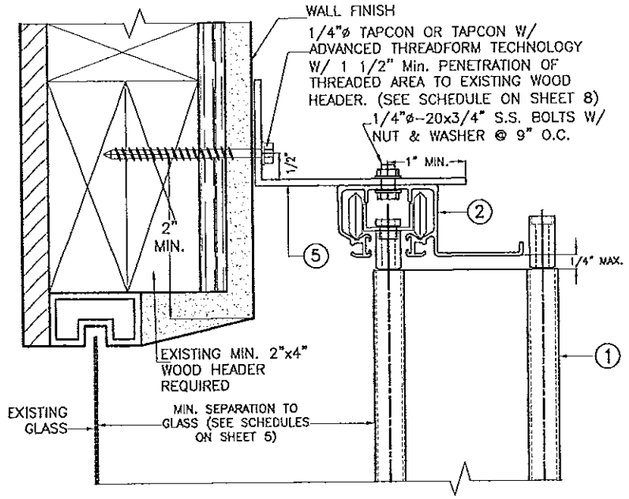


7W WALL MOUNTING INSTALLATION

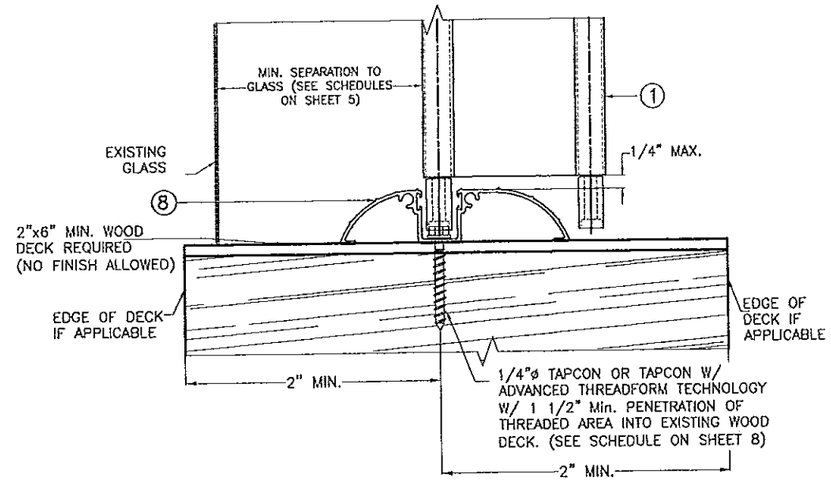


8W FLOOR CONNECTION

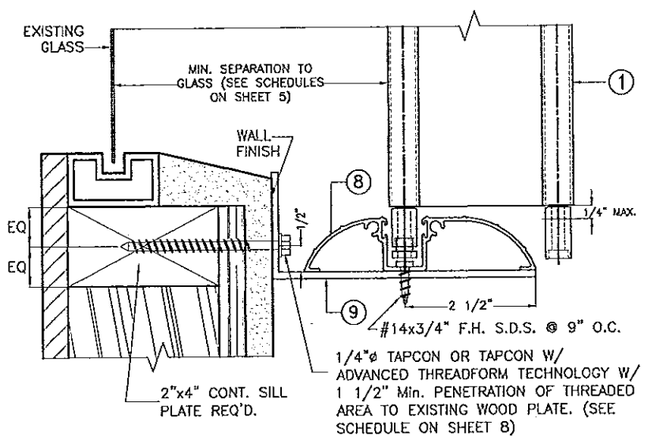


9W WALL MOUNTING INSTALLATION

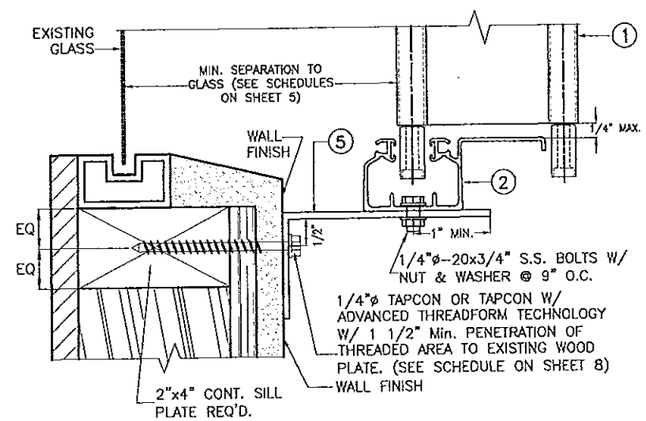


10W WALL MOUNTING INSTALLATION

**NOTE:**
1-SEE SHEET 3 FOR TYPICAL SHUTTER ASSEMBLY

2-MOUNTING SECTIONS CAN BE COMBINED IN ANY WAY TO SUIT ANY INSTALLATION.

# INSTALLATION DETAILS ON EXISTING WOOD BUILDINGS

SCALE 3/8"=1"

FLORIDA BUILDING CODE (**H**igh **V**elocity **H**urricane **Z**one)

PRODUCT REVISED
as complying with the Florida Building Code
Acceptance No 13-0514.03
Expiration Date 09/22/2016
By
Miami Dade Product Control

MIAMI-DADE COUNTY

WALTER A. TILLIT JR. LICENSE No. 44167 STATE OF FLORIDA PROFESSIONAL ENGINEER

P.E. SEAL/SIGNATURE/DATE

TILTECO INC.
TILLIT TESTING & ENGINEERING COMPANY
6355 N.W. 36th. St., Ste. 305, VIRGINIA GARDENS, FLORIDA 33166
Phone : (305)871-1530 . Fax : (305)871-1531
e-mail: tilteco@aol.com
EB-0006719
WALTER A. TILLIT Jr. P.E.
FLORIDA Lic. # 44167

**JC IMPACT SHUTTERS & GLASS, INC.**
(ASSA # 43)
9465 N.W. 109 STREET, # 107
MEDLEY, FL 33178
PH: (305) 863-2727, FAX: (305) 889-1983

© 2013 EASTERN METAL SUPPLY, INC.

**BERTHA HV™**
Accordion Shutter System
H.V. BLADE #3 W/ OR W/O H.V. WINDOW BLADE #3

| REV. No | DESCRIPTION | DATE | DRAWN BY: A.G. |
|---|---|---|---|
| 1 | OLD 12-053 | 03/18/13 | DATE: 03/18/13 |
| 2 | | | DRAWING No |
| 3 | | | 13-025 |
| 4 | | | |
| 5 | | | SHEET |
| 6 | | | 15 OF 18 |

# END INSTALLATION INTO 2"x4" MIN. WOOD STUDS◆

SCALE 3/8"=1"

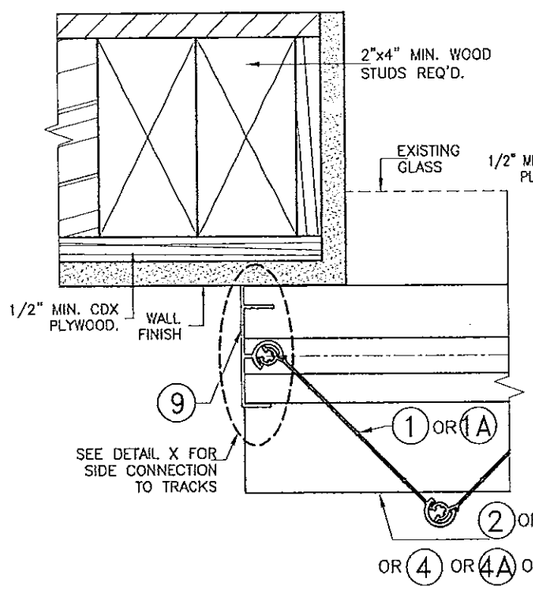


① END CONNECTION DETAIL

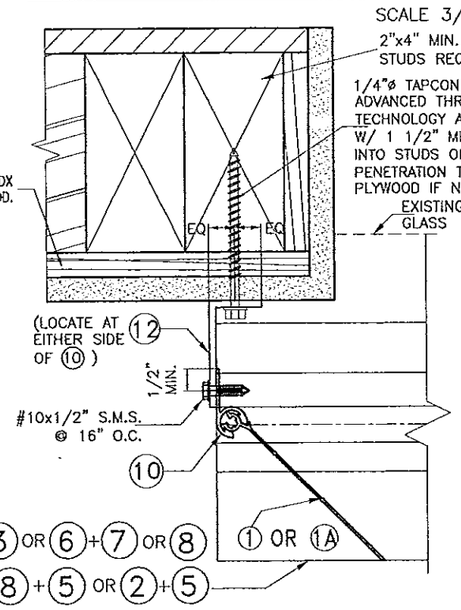


② END CONNECTION DETAIL

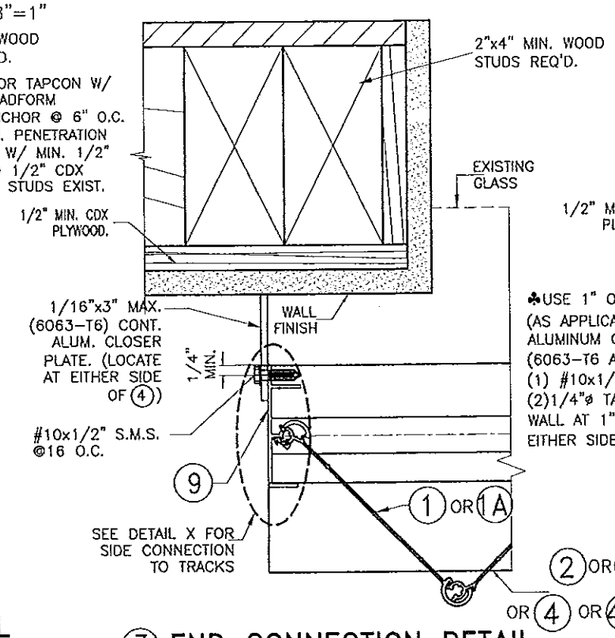


③ END CONNECTION DETAIL

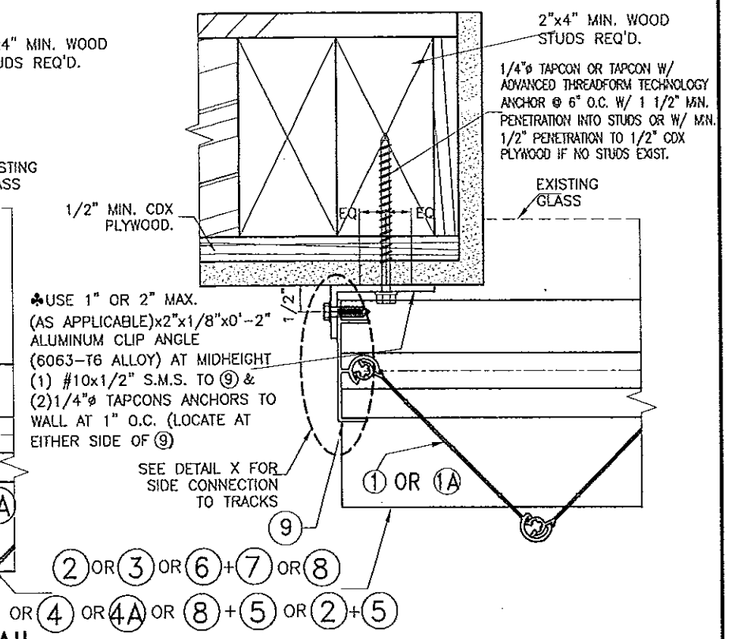


④ END CONNECTION DETAIL

♣ REQUIRED ONLY FOR SPANS GREATER THAN 12'-0"

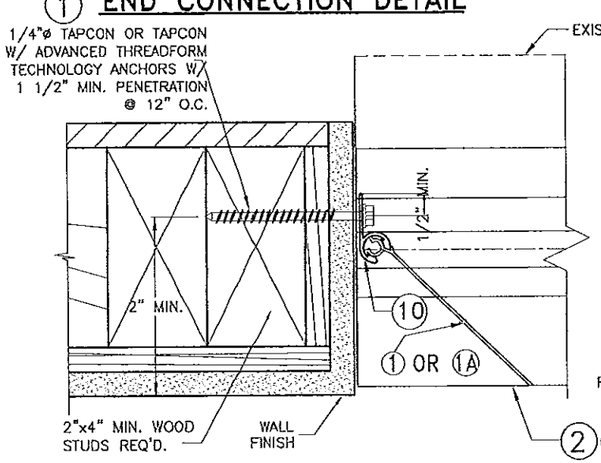


⑤ END CONNECTION DETAIL

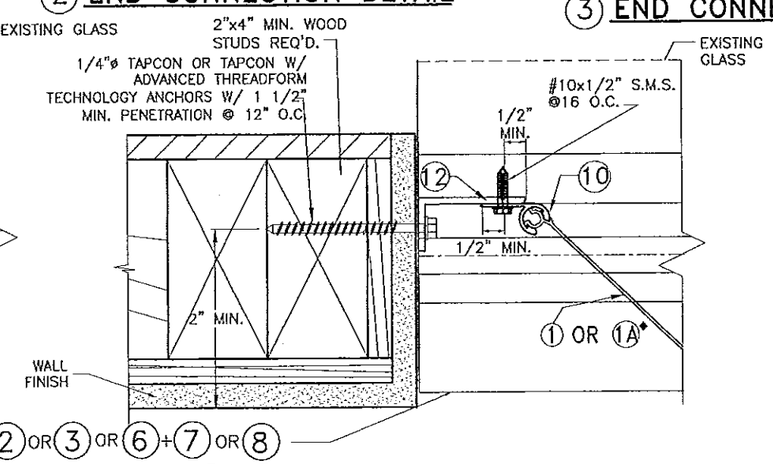


⑥ END CONNECTION DETAIL

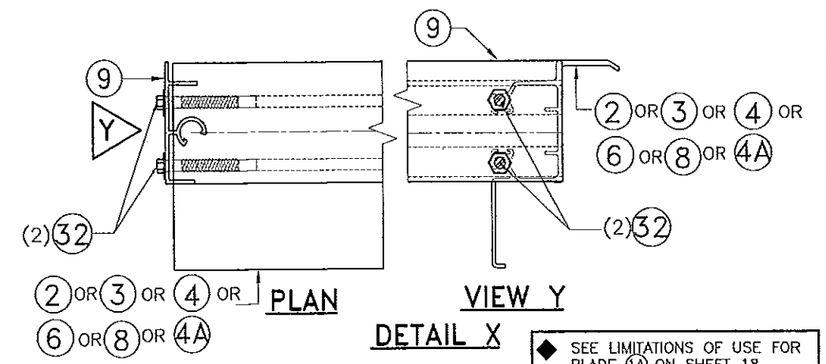


◆ SEE LIMITATIONS OF USE FOR BLADE 1A ON SHEET 18.

FLORIDA BUILDING CODE (**H**igh **V**elocity **H**urricane **Z**one)

PRODUCT REVISED
as complying with the Florida Building Code
Acceptance No 13-0514.03
Expiration Date 09/22/2016
By
Miami Dade Product Control

MIAMI-DADE COUNTY

WALTER A. TILLIT JR. LICENSE No 44167 STATE OF FLORIDA PROFESSIONAL ENGINEER

P.E. SEAL/SIGNATURE/DATE


TILTECO INC.

TILLIT TESTING & ENGINEERING COMPANY
6355 N.W. 36th. St., Ste. 305, VIRGINIA GARDENS, FLORIDA 33166
Phone : (305)871-1530 . Fax : (305)871-1531
e-mail: tilteco@aol.com
EB-0006719
WALTER A. TILLIT Jr. P.E.
FLORIDA Lic. # 44167


**JC IMPACT SHUTTERS & GLASS, INC.**

(ASSA # 43)

9465 N.W. 109 STREET, # 107
MEDLEY, FL 33178

PH: (305) 863-2727, FAX: (305) 889-1983

© 2013 EASTERN METAL SUPPLY, INC.

**BERTHA HV™**
Accordion Shutter System
H.V. BLADE #3 W/ OR W/O H.V. WINDOW BLADE #3

| REV. No | DESCRIPTION | DATE | DRAWN BY: A.G. |
|---|---|---|---|
| 1 | OLD 12-053 | 03/18/13 | DATE: 03/18/13 |
| 2 | | | DRAWING No 13-025 |
| 3 | | | |
| 4 | | | |
| 5 | | | SHEET 16 OF 18 |
| 6 | | | |

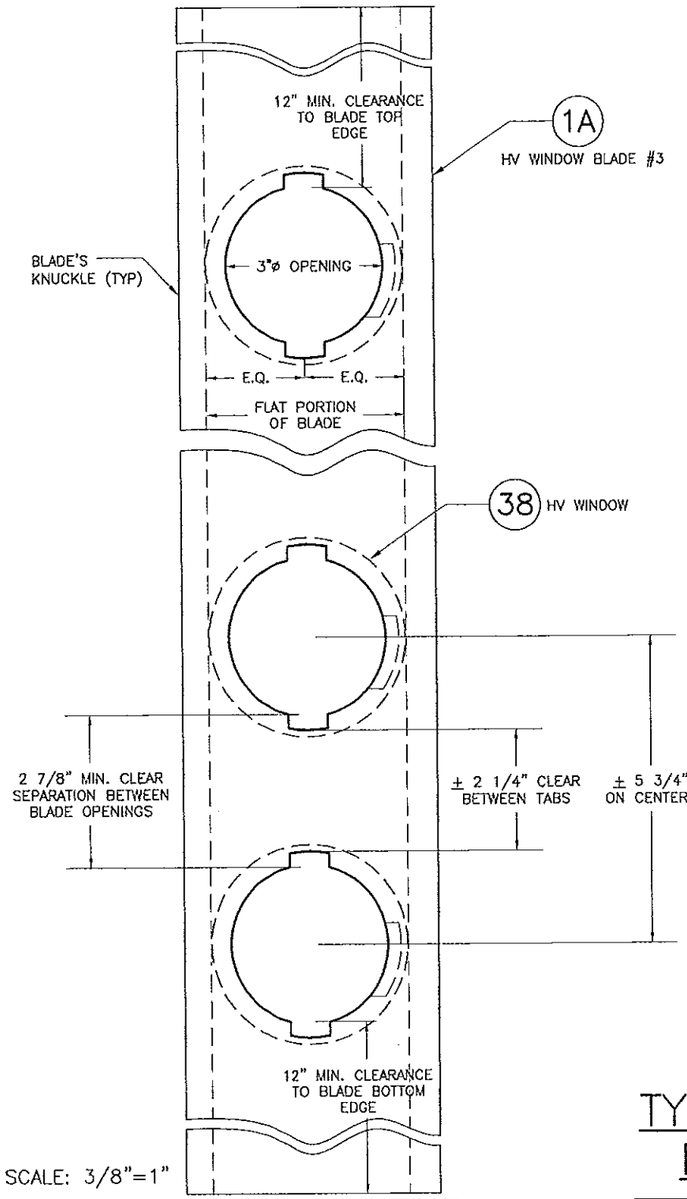


SCALE: 3/8"=1"

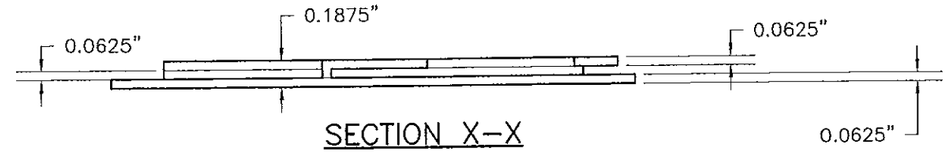


SECTION X–X

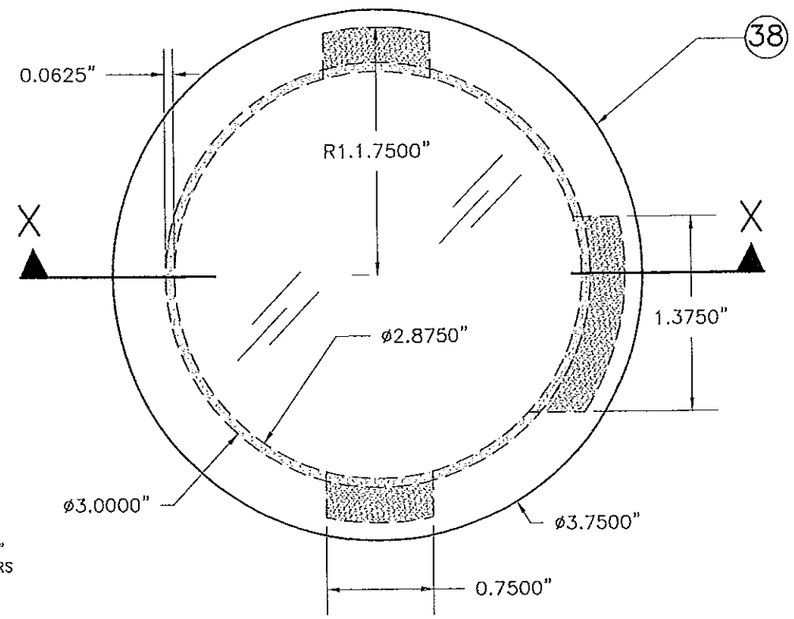


(38) POLYCARBONATE IMPACT RESISTANT HV WINDOW
BAYER MAKROLON 3103 POLYCARBONATE RESINS, UV–STABILIZED GRADE

EXTERIOR ELEVATION
SCALE: 1" = 1"

POLYCARBONATE SOURCES FOR (38)

| TYPICAL PROPERTIES | APPLICABLE STANDARD REFERENCE | RESULT | |
|---|---|---|---|
| | | BAYER MATERIAL/SCIENCE LLC. MAKROLON 3103 | SABIC INNOVATIVE PLASTIC LEXAN 103 RESIN * |
| PHYSICAL: | | | |
| SPECIFIC GRAVITY | ASTM D792 | 0.043 lb/in³ | 0.043 lb/in³ |
| MECHANICAL: | | | |
| TENSILE YIELD STRENGTH | ASTM D638 | 9,400 p.s.i. | 9,500 p.s.i. |
| FLEXURAL STRENGTH AT YIELD | ASTM D790 | 12,500 p.s.i. | 13,400 p.s.i. |
| FLEXURAL MODULUS | ASTM D790 | 340,000 p.s.i. | 345,000 p.s.i. |
| IMPACT: | | | |
| NOTCHED IZOD | ASTM D256 | 18 FT–lb/in | 17 FT–lb/in |
| FIRE BURNING CHARACTERISTICS: | | | |
| SMOKE DENSITY | ASTM D2843 | 47.2 % | 64.5 % MAX. |
| RATE OF BURNING | ASTM D635 | C–1 CLASS | C–1 CLASS |
| SELF IGNITION | ASTM D1929 | 1040 °F | 980 °F |
| WEATHERING: | ASTM G155 | | |
| TENSILE STRENGTH AFTER WEATHERING | ASTM 638 | 9302 p.s.i. | 8840 p.s.i. |
| ~~TENSILE STRESS BEFORE WEATHERING~~ | ~~ASTM 638~~ | ~~8461 p.s.i.~~ | ~~8880 p.s.i.~~ |

* PER NOA #08–0305.02

# TYPICAL (1A) HV WINDOW BLADE #3 AND POLYCARBONATE HV WINDOW DETAIL

FLORIDA BUILDING CODE (**H**igh **V**elocity **H**urricane **Z**one)

PRODUCT REVISED
as complying with the Florida Building Code
Acceptance No 13-0514.03
Expiration Date 09/22/2016
By
Miami Dade Product Control

MIAMI–DADE COUNTY

WALTER A. TILLIT JR. LICENSE No. 44167 STATE OF FLORIDA PROFESSIONAL ENGINEER

P.E. SEAL/SIGNATURE/DATE


TILTECO INC.
TILLIT TESTING & ENGINEERING COMPANY
6355 N.W. 36th. St., Ste. 305, VIRGINIA GARDENS, FLORIDA 33166
Phone : (305)871–1530 . Fax : (305)871–1531
e–mail: tilteco@aol.com
EB–0006719
WALTER A. TILLIT Jr. P.E.
FLORIDA Lic. # 44167

**JC IMPACT SHUTTERS & GLASS, INC.**
(ASSA # 43)
9465 N.W. 109 STREET, # 107
MEDLEY, FL 33178
PH: (305) 863–2727, FAX: (305) 889–1983


© 2013 EASTERN METAL SUPPLY, INC.

**BERTHA HV™**
Accordion Shutter System
H.V. BLADE #3 W/ OR W/O H.V. WINDOW BLADE #3

| REV. No | DESCRIPTION | DATE | DRAWN BY: A.G. |
|---|---|---|---|
| 1 | OLD 12–053 | 03/18/13 | DATE: 03/18/13 |
| 2 | | | DRAWING No |
| 3 | | | 13–025 |
| 4 | | | |
| 5 | | | SHEET |
| 6 | | | 17 OF 18 |

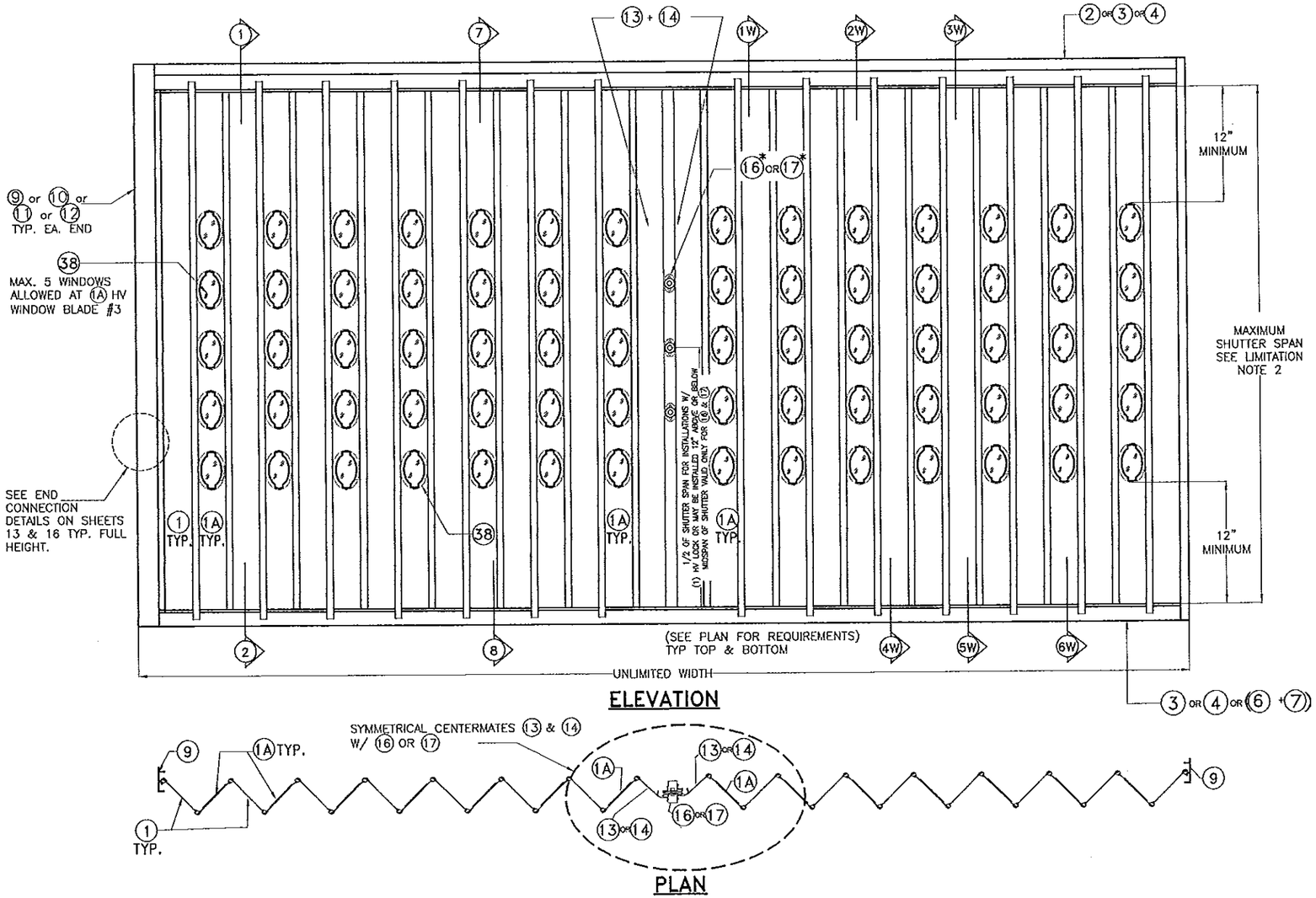


## * GENERAL LIMITATIONS AND CONDITIONS OF USE FOR BERTHA 1 HV BLADE #3 ACCORDION SHUTTER SYSTEM WORKING IN UNISON WITH 1A HV WINDOW BLADE #3.

1. MAX. A.S.D. DESIGN PRESSURE RATING: +62, −62 p.s.f.

2. MAX. SHUTTER SPAN: 107" = 8'−11" @ +62, −62 psf
   MAX. SHUTTER SPAN: 114" = 9'−6" @ +55, −55 psf

3. ALLOWED MOUNTINGS: 1, 2, 7 & 8 ON SHEETS 9 & 10; AS WELL AS MOUNTINGS 1W, 2W, 3W, 4W, 5W & 6W ON SHEET 14.

4. ONLY CENTERMATES 13 14 (BOTH W/ 16 OR 17) ARE ALLOWED WITH 13 14 ARRANGED IN A SYMMETRICAL LAYOUT.

5. (A) 1A HV WINDOW BLADE #3 SHALL ONLY ALLOW A MAXIMUM OF 5 OPENINGS (3"ø HOLES) FOR 38 PER BLADE AT SPACINGS SHOWN ON SHEET 17.

(B) MIN. CLEARANCE FROM TOP OR BOTTOM EDGE OF 1A HV WINDOW BLADE #3 OF ANY 3"ø HOLE FOR 38 SHALL BE 12".

(C) FIRST OR LAST BLADE COMING OUT FROM STARTERS AT ENDS MAY BE 1 HV WINDOW BLADE #3.

(D) 1A HV WINDOW BLADE #3 MUST BE USED ALTERNATE TO A SOLID 1 HV BLADE #3 THROUGHOUT SHUTTER'S WIDTH.

(E) CENTERMATES SHALL ALWAYS BE INSTALLED ADJACENT TO A SOLID 1A HV BLADE #3 AT EITHER SIDE OF THEM.

(F) POLYCARBONATE HV WINDOW 38 SHALL BE INSTALLED SO THAT TABS FACE THE INTERIOR OF THE OPENING BEING PROTECTED. HV WINDOW 38 MUST BE ONLY INSTALLED AND LOCKED USING A HV SETTING TOOL PROVIDED BY ASSA, INC.

6. SEE ANCHOR SPACING SCHEDULE FOR INSTALLATIONS INTO WOOD FRAME BUILDINGS ON SHEET 8, AS LIMITED BY SPAN AND DESIGN LOAD (SEE NOTES 1 & 2 ABOVE).

7. SEE ANCHOR SPACING SCHEDULE FOR INSTALLATIONS INTO POURED CONCRETE OR CONCRETE BLOCK WALL ON SHEETS 6 & 7 AS LIMITED BY SPAN AND DESIGN LOAD (SEE NOTES 1 & 2 ABOVE).

8. SEE MINIMUM SEPARATION TO GLASS ON SHEET 5.

## 1 TYPICAL HV BLADE #3 WORKING IN UNISON WITH 1A HV WINDOW BLADE #3 SHUTTER*

N.T.S.

FLORIDA BUILDING CODE (**H**igh **V**elocity **H**urricane **Z**one)

PRODUCT REVISED
as complying with the Florida Building Code
Acceptance No 13-0514.03
Expiration Date 09/22/2016
By
Miami Dade Product Control

MIAMI-DADE COUNTY

WALTER A. TILLIT JR. LICENSE No. 44167 STATE OF FLORIDA PROFESSIONAL ENGINEER

P.E. SEAL/SIGNATURE/DATE


TILTECO INC.

TILLIT TESTING & ENGINEERING COMPANY
6355 N.W. 36th. St., Ste. 305, VIRGINIA GARDENS, FLORIDA 33166
Phone : (305)871-1530 . Fax : (305)871-1531
e-mail: tilteco@aol.com
EB-0006719
WALTER A. TILLIT Jr. P.E.
FLORIDA Lic. # 44167

**JC IMPACT SHUTTERS & GLASS, INC.**
(ASSA # 43)
9465 N.W. 109 STREET, # 107
MEDLEY, FL 33178
PH: (305) 863-2727, FAX: (305) 889-1983


© 2013 EASTERN METAL SUPPLY, INC.

**BERTHA HV™**
Accordion Shutter System
H.V. BLADE #3 W/ OR W/O H.V. WINDOW BLADE #3

| REV. No | DESCRIPTION | DATE | DRAWN BY: A.G. |
|---|---|---|---|
| 1 | OLD 12-053 | 03/18/13 | DATE: 03/18/13 |
| 2 | SPANS/LOADS | 04/18/13 | DRAWING No 13-025 |
| 3 | | | |
| 4 | | | |
| 5 | | | SHEET 18 OF 18 |
| 6 | | | |