MIAMI-DADE COUNTY
DEPARTMENT OF REGULATORY AND ECONOMIC RESOURCES (RER)
BOARD AND CODE ADMINISTRATION DIVISION

MIAMI-DADE COUNTY, FLORIDA
PRODUCT CONTROL SECTION
11805 SW 26 Street, Room 208
T (786) 315-2590 F (786) 315-2599
www.miamidade.gov/economy

NOTICE OF ACCEPTANCE (NOA)

Montag Windows & Doors, LLC
1249 Stirling Road, Suite 14
Dania Beach, FL 33004

SCOPE:

This NOA is being issued under the applicable rules and regulations governing the use of construction materials. The documentation submitted has been reviewed and accepted by Miami-Dade County RER-Product Control Section to be used in Miami-Dade County and other areas where allowed by the Authority Having Jurisdiction (AHJ).

This NOA shall not be valid after the expiration date stated below. The Miami-Dade County Product Control Section (In Miami-Dade County) and/or the AHJ (in areas other than Miami-Dade County) reserve the right to have this product or material tested for quality assurance purposes. If this product or material fails to perform in the accepted manner, the manufacturer will incur the expense of such testing and the AHJ may immediately revoke, modify, or suspend the use of such product or material within their jurisdiction. RER reserves the right to revoke this acceptance, if it is determined by Miami-Dade County Product Control Section that this product or material fails to meet the requirements of the applicable building code.

This product is approved as described herein, and has been designed to comply with the Florida Building Code, including the High Velocity Hurricane Zone.

DESCRIPTION: Series "Push-Out Meranti" Outswing Wood Casement Window – L.M.I.

APPROVAL DOCUMENT: Drawing No. **W13-09**, Series titled "Wood Frame Push Out Casement Window (L.M.I.)", sheets 01 through 13 of 13, dated 03/20/13 with revision "**A**" dated 06/25/13, prepared by Al-Farooq Corporation, signed and sealed by Javad Ahmad, P. E., bearing the Miami-Dade County Product Control Section Approval stamp with the Notice of Acceptance number and Approval date by the Miami-Dade County Product Control Section.

MISSILE IMPACT RATING: Large and Small Missile Impact Resistant

LABELING: Each unit shall bear a permanent label with the manufacturer's name or logo, **Biberach, Germany**, series, and following statement: "Miami-Dade County Product Control Approved", unless otherwise noted herein.

RENEWAL of this NOA shall be considered after a renewal application has been filed and there has been no change in the applicable building code negatively affecting the performance of this product.

TERMINATION of this NOA will occur after the expiration date or if there has been a revision or change in the materials, use, and/or manufacture of the product or process. Misuse of this NOA as an endorsement of any product, for sales, advertising or any other purposes shall automatically terminate this NOA. Failure to comply with any section of this NOA shall be cause for termination and removal of NOA.

ADVERTISEMENT: The NOA number preceded by the words Miami-Dade County, Florida, and followed by the expiration date may be displayed in advertising literature. If any portion of the NOA is displayed, then it shall be done in its entirety.

INSPECTION: A copy of this entire NOA shall be provided to the user by the manufacturer or its distributors and shall be available for inspection at the job site at the request of the Building Official.

This NOA consists of this page 1 and evidence pages E-1 and E-2, as well as approval document mentioned above.

The submitted documentation was reviewed by **Jaime D. Gascon, P. E.**

MIAMI-DADE COUNTY APPROVED

J. Gascon 7/16/13

NOTICE OF ACCEPTANCE: EVIDENCE SUBMITTED

A. DRAWINGS

1. Manufacturer's die drawings and sections.
2. Drawing No. **W13–09**, Series titled "Wood Frame Push Out Casement Window (L.M.I.)", sheets 01 through 13 of 13, dated 03/20/13 with revision "**A**" dated 06/25/13, prepared by Al–Farooq Corporation, signed and sealed by Javad Ahmad, P. E.

B. TESTS

1. Test reports on: 1) Air Infiltration Test, per FBC, TAS 202–94
   2) Uniform Static Air Pressure Test, Loading per FBC, TAS 202–94
   3) Water Resistance Test, per FBC, TAS 202–94
   4) Large Missile Impact Test per FBC, TAS 201–94
   5) Cyclic Wind Pressure Loading per FBC, TAS 203–94
   6) Forced Entry Test, per FBC 2411.3.2.1, and TAS 202–94

   along with marked–up drawings and installation diagram of a wood casement window, prepared by Architectural Testing, Inc., Test Report No. **ATI–B3883.01–550–18**, dated 11/09/11, signed and sealed by Vinu J. Abraham, P. E.
2. Test reports on: 1) Air Infiltration Test, per FBC, TAS 202–94
   2) Uniform Static Air Pressure Test, Loading per FBC, TAS 202–94
   3) Large Missile Impact Test per FBC, TAS 201–94
   4) Cyclic Wind Pressure Loading per FBC, TAS 203–94
   5) Forced Entry Test, per FBC 2411.3.2.1, and TAS 202–94

   along with marked–up drawings and installation diagram of a wood casement window, prepared by Architectural Testing, Inc., Test Report No. **ATI–B9582.01–550–18**, dated 01/29/13, signed and sealed by Vinu J. Abraham, P. E.

C. CALCULATIONS

1. Anchor verification calculations and structural analysis, complying with **FBC–2010**, prepared by Al–Farooq Corporation, dated 04/08/13, signed and sealed by Javad Ahmad, P. E.
2. **Glazing complies with ASTM E1300–04**

D. QUALITY ASSURANCE

1. Miami–Dade Department of Regulatory and Economic Resources (RER).

E. MATERIAL CERTIFICATIONS

1. Notice of Acceptance No. **11–0624.02** issued to **E.I. DuPont DeNemours & Co.**, Inc. for their "**DuPont SentryGlas® Interlayer**" dated 08/25/11, expiring on 01/14/17.

Jaime D. Gascon, P. E.
Product Control Section Supervisor
NOA No. 13–0514.17
Expiration Date: July 25, 2018
Approval Date: July 25, 2013

NOTICE OF ACCEPTANCE: EVIDENCE SUBMITTED

F. STATEMENTS

1. Statement letter of no financial interest, conformance and complying with **FBC–2010**, issued by Al–Farooq Corporation, dated 04/08/13, signed and sealed by Javad Ahmad, P. E.
2. Laboratory compliance letter for Test Report No. **ATI–B3883.01–550–18**, issued by Architectural Testing, Inc., dated 01/30/13, signed and sealed by Vinu J. Abraham, P. E.
3. Proposal No. **11–0844R** revised by Product Control, dated 09/21/11, signed by Manuel Perez, P. E.
4. Laboratory compliance letter for Test Report No. **ATI–B9582.01–550–18**, issued by Architectural Testing, Inc., dated 01/29/13, signed and sealed by Vinu J. Abraham, P. E.
5. Proposal No. **11–0844** issued by Product Control, dated 08/01/11, signed by Manuel Perez, P. E.
6. Distributor Agreement between Montag Windows & Doors, LLC, USA and Fensterfabrik Montag Fassadenbau GmBH & Co., KG, Germany, dated 02/01/13, signed by Mr. Maximilian Jahl and Mr. Gerhard Lang, respectively.
7. Supply agreement dated 01/01/12, signed by Mr. Maximilian Jahl and Mr. Gerhard Lang.
8. Department of State Certification of **MONTAG WINDOWS & DOORS, LLC** as a limited liability company, active and organized under the laws of the State of Florida and of the State of Delaware, dated 12/24/08 and signed by Ms. Suzanne Hawkes, Regulatory Specialist II of the Secretaries of State.

G. OTHERS

1. None.

Jaime D. Gascon, P. E.
Product Control Section Supervisor
NOA No. 13–0514.17
Expiration Date: July 25, 2018
Approval Date: July 25, 2013

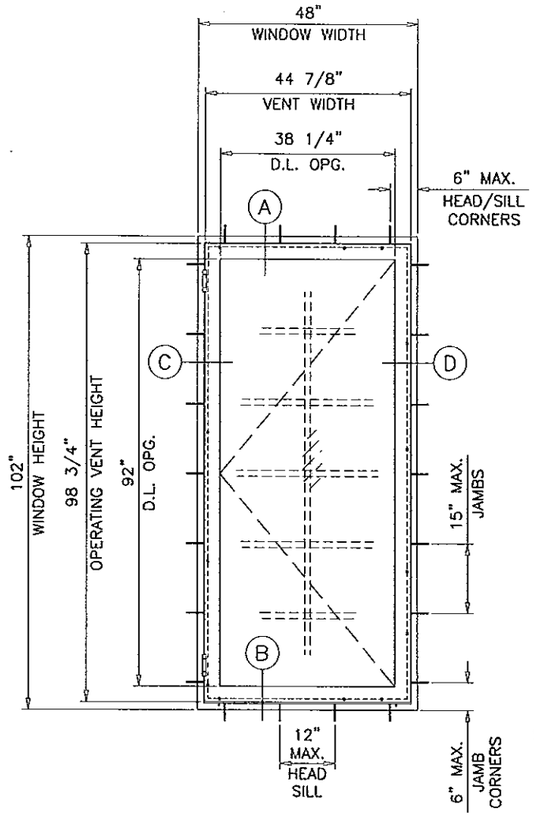

(X)

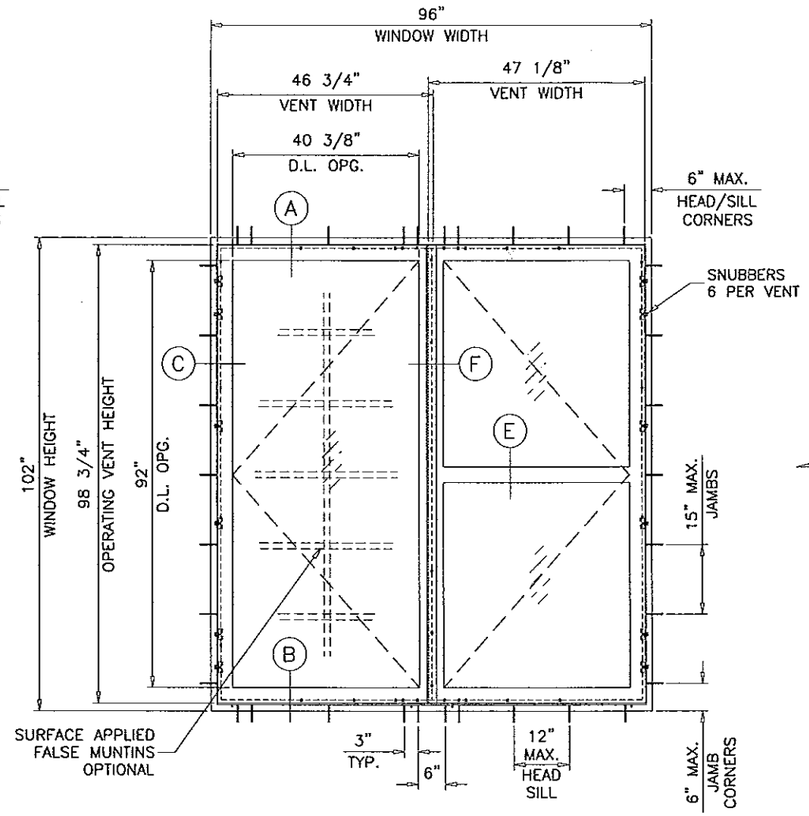

(XX)

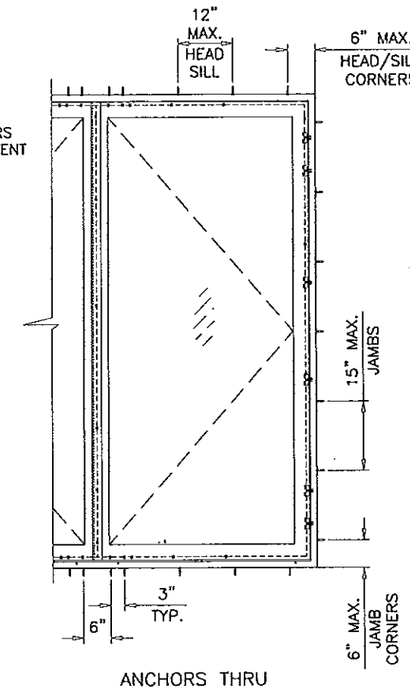

ANCHORS THRU
STRAP CLIPS
SEE SHEET 10 FOR DETAIL

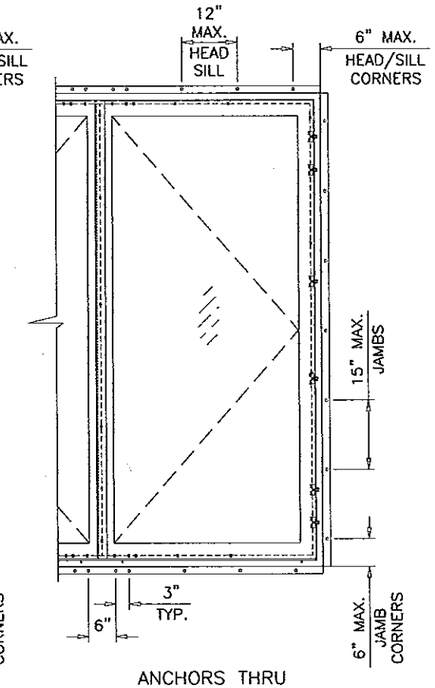

ANCHORS THRU
CONTINUOUS ANGLE
SEE SHEET 10 FOR DETAIL

TYPICAL ELEVATIONS

Approved as complying with the
Florida Building Code
Date 07/25/2014
NOA# 13-0614.17
Miami Dade Product Control
By

THESE WINDOWS ARE RATED FOR LARGE MISSILE IMPACT.
SHUTTERS ARE NOT REQUIRED.

ALL WOOD IN CONTACT WITH MASONRY AND CONCRETE ETC.
WILL BE TREATED USING ONE COAT OF 'INDULINE GW360', ONE COAT OF
'INDULINE ZW502' AND TWO COATS OF 'INDULINE LW700' WOOD PRESERVATIVE.

WOOD FRAME PUSH OUT CASEMENT WINDOW

APPROVAL APPLIES TO SINGLE UNITS OR SIDE BY SIDE COMBINATIONS OF TWO OR MORE UNITS.
CODE REQUIREMENTS FOR SAFEGUARDS MUST BE OBSERVED.

SEE CHARTS ON SHEET 3 FOR DESIGN LOAD CAPACITY OF OPERATING VENT SINGLE(X) AND DOUBLE(XX) WINDOWS.

SEE CHARTS ON SHEET 4 FOR DESIGN LOAD CAPACITY OF FIXED VENT(O) WINDOWS.

FOR SIDE BY SIDE WINDOW MULLION CAPACITY SEE SHEET 5.

FOR TOP & BOTTOM WINDOW MULLION CAPACITY SEE SHEET 6.

THE LOWEST VALUE RESULTING FROM WINDOW OR MULLION CAPACITY CHARTS WILL APPLY TO ENTIRE SYSTEM.

THIS PRODUCT HAS BEEN DESIGNED AND TESTED TO COMPLY WITH THE REQUIREMENTS OF THE FLORIDA BUILDING CODE INCLUDING HIGH VELOCITY HURRICANE ZONE (HVHZ).

WOOD BUCKS BY OTHERS, MUST BE ANCHORED PROPERLY TO TRANSFER LOADS TO THE STRUCTURE.

ANCHORS SHALL BE AS LISTED, SPACED AS SHOWN ON DETAILS, ANCHORS EMBEDMENT TO BASE MATERIAL SHALL BE BEYOND WALL DRESSING OR STUCCO.

ANCHORING OR LOADING CONDITIONS NOT SHOWN IN THESE DETAILS ARE NOT PART OF THIS APPROVAL.

A LOAD DURATION INCREASE IS USED IN DESIGN OF ANCHORS INTO WOOD ONLY.

MATERIALS INCLUDING BUT NOT LIMITED TO STEEL/METAL SCREWS, THAT COME INTO CONTACT WITH OTHER DISSIMILAR MATERIALS SHALL MEET THE REQUIREMENTS OF THE FLORIDA BLDG. CODE SECTION 2003.8.4.

Engr: JAVAD AHMAD
CIVIL
FLA. PE # 70592
C.A.N. 3538

JUL 19 2013

AL-FAROOQ CORPORATION
ENGINEERS & PRODUCT DEVELOPMENT
1235 S.W. 87 AVE
MIAMI, FLORIDA 33174
TEL. (305) 264-8100 FAX. (305) 262-6978

COMP-ANL\W13-09MNA

WOOD FRAME PUSH OUT CASEMENT WINDOW (L.M.I.)

MONTAG WINDOWS & DOORS, LLC.
1249 STIRLING ROAD, STE. 14
DANIA BEACH, FL 33004
TEL. (866) 562-1728 FAX. (866) 563-1728

revisions:

no	date	by	description
A	06.25.13		NO CHANGE THIS SHEET

date: 03-20-13
scale: 3/8"=1'-0"
dr. by: HAMID
chk. by:

drawing no.
W13-09

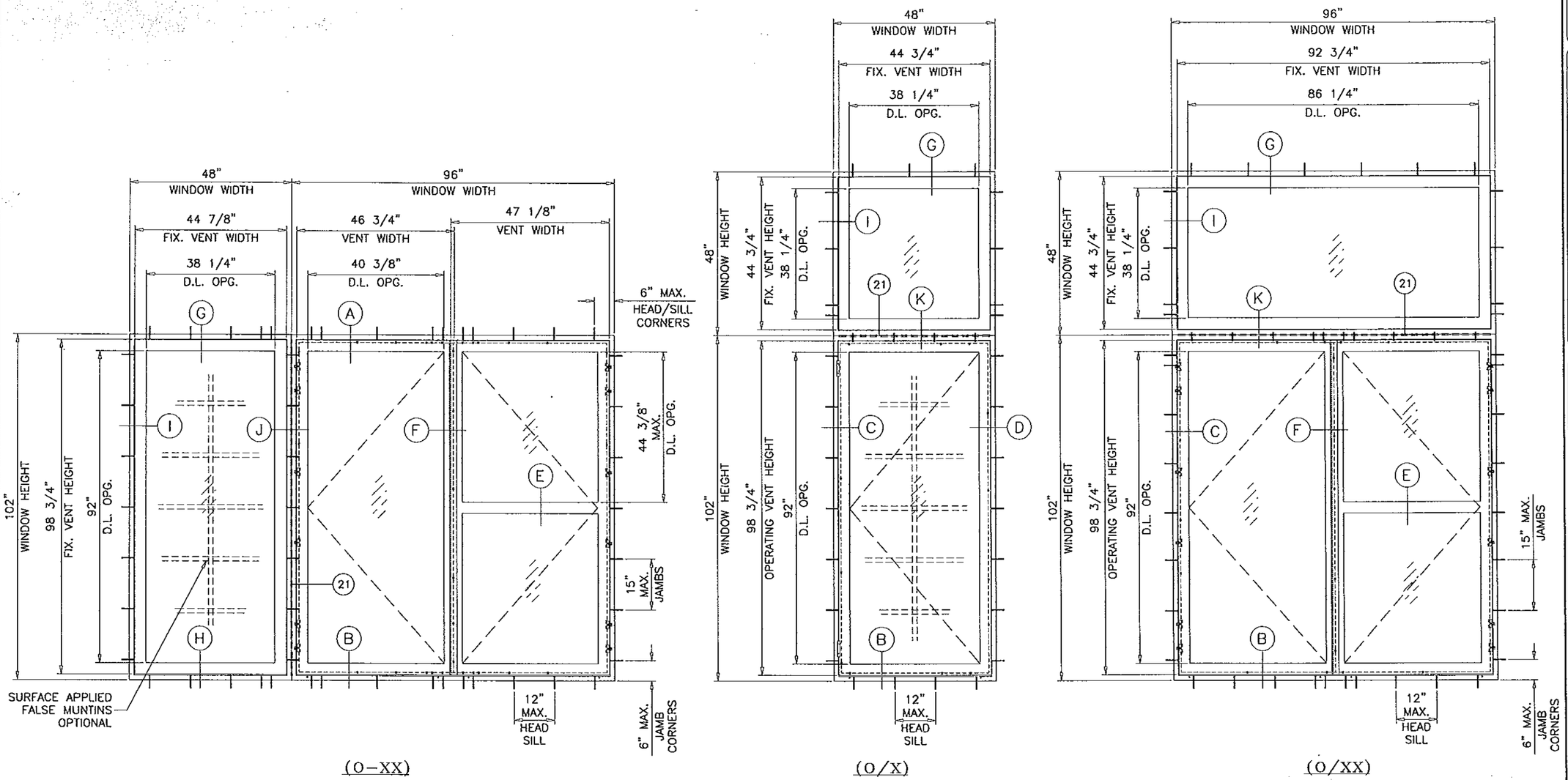

TYPICAL ELEVATIONS

Approved as complying with the
Florida Building Code
Date 07/25/2013
NOA# 13-0514.17
Miami-Dade Product Control
By

Engr: JAVAD AHMAD
CIVIL
FLA. PE # 70592
C.A.N. 3538

JUL 09 2013

AL-FAROOQ CORPORATION
ENGINEERS & PRODUCT DEVELOPMENT
1235 S.W. 87 AVE
MIAMI, FLORIDA 33174
TEL. (305) 264-8100 FAX. (305) 262-6978
COMP-ANL\W13-09MNA

WOOD FRAME PUSH OUT CASEMENT WINDOW (L.M.I.)

MONTAG WINDOWS & DOORS, LLC.
1249 STIRLING ROAD, STE. 14
DANIA BEACH, FL 33004
TEL. (866) 562-1728 FAX. (866) 563-1728

revisions:

no	date	by	description
A	06.25.13		REV. PER RER COMMENTS

date: 03-20-13
scale: 3/8"=1'-0"
dr. by: HAMID
chk. by:

drawing no.
W13-09

sheet 2 of 13

DESIGN LOAD CAPACITY – PSF (SINGLE 'X' UNITS)			
WINDOW DIMS.		LAMINATED GLASS LAM. INSUL. GLASS	
WIDTH	HEIGHT	EXT. (+)	INT. (–)
24"	60" (5)	65.0	85.0
30"		65.0	85.0
36"		65.0	85.0
42"		65.0	85.0
48"		65.0	85.0
24"	63" (5)	65.0	85.0
30"		65.0	85.0
36"		65.0	85.0
42"		65.0	85.0
48"		65.0	85.0
24"	72" (5)	65.0	85.0
30"		65.0	85.0
36"		65.0	85.0
42"		65.0	85.0
48"		65.0	83.3
24"	78" (6)	65.0	85.0
30"		65.0	85.0
36"		65.0	85.0
42"		65.0	85.0
48"		65.0	85.0
24"	84" (6)	65.0	85.0
30"		65.0	85.0
36"		65.0	85.0
42"		65.0	85.0
48"		65.0	85.0
24"	90" (7)	65.0	85.0
30"		65.0	85.0
36"		65.0	85.0
42"		65.0	85.0
48"		65.0	85.0
24"	96" (7)	65.0	85.0
30"		65.0	85.0
36"		65.0	85.0
42"		65.0	85.0
48"		65.0	85.0
24"	102" (7)	65.0	85.0
30"		65.0	85.0
36"		65.0	85.0
42"		65.0	85.0
48"		65.0	82.4

( ) = NO. OF ANCHORS PER JAMB

DESIGN LOAD CAPACITY – PSF (DOUBLE 'XX' UNITS)			
WINDOW DIMS.		LAMINATED GLASS LAM. INSUL. GLASS	
WIDTH	HEIGHT	EXT. (+)	INT. (–)
24"	60" (5)	65.0	85.0
30"		65.0	85.0
36"		65.0	85.0
42"		65.0	85.0
48"		65.0	85.0
24"	63" (5)	65.0	85.0
30"		65.0	85.0
36"		65.0	85.0
42"		65.0	85.0
48"		65.0	85.0
24"	72" (5)	65.0	85.0
30"		65.0	85.0
36"		65.0	85.0
42"		65.0	85.0
48"		65.0	83.3
24"	78" (6)	65.0	85.0
30"		65.0	85.0
36"		65.0	85.0
42"		65.0	85.0
48"		65.0	85.0
24"	84" (6)	65.0	85.0
30"		65.0	85.0
36"		65.0	85.0
42"		65.0	85.0
48"		65.0	78.9
24"	90" (7)	65.0	85.0
30"		65.0	85.0
36"		65.0	85.0
42"		65.0	84.0
48"		65.0	73.7
24"	96" (7)	65.0	85.0
30"		65.0	85.0
36"		65.0	85.0
42"		65.0	77.3
48"		65.0	69.1
24"	102" (7)	65.0	85.0
30"		65.0	85.0
36"		65.0	80.5
42"		65.0	71.5
48"		65.0	65.0

( ) = NO. OF ANCHORS PER JAMB

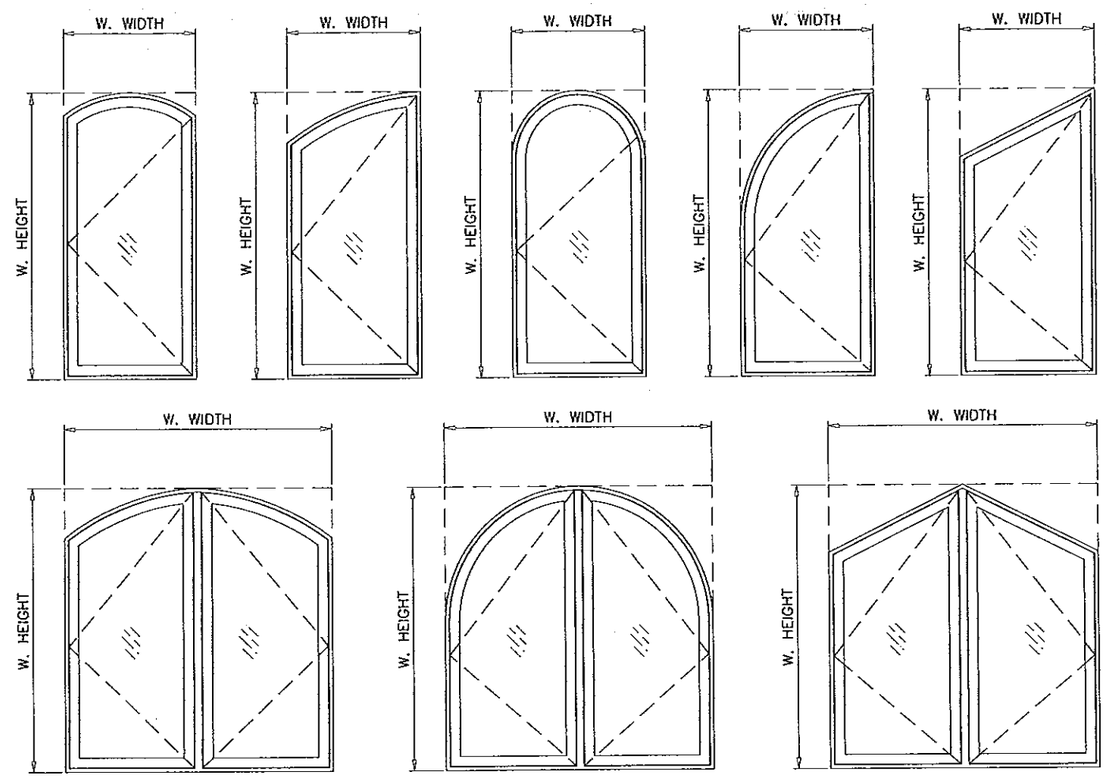

ALLOWABLE LOADS FOR ALTERNATE SHAPES AS SHOWN ABOVE OR SIMILAR CAN BE VERIFIED BY INSCRIBING WINDOW SHAPE WITHIN SQUARE OR RECTANGLE AS SHOWN IN DOTTED LINES AND OBTAINING ALLOWABLE LOADS FROM THOSE SHAPES.

NOTE:
GLASS CAPACITIES ON THIS SHEET ARE BASED ON ASTM E1300-04 (3 SEC. GUSTS) AND FLORIDA BUILDING COMMISSION DECLARATORY STATEMENT DCA05-DEC-219

Approved as complying with the Florida Building Code
Date 07/25/2013
NOA# 13-0514.17
Miami Dade Product Control
By

Engr: JAVAD AHMAD
CIVIL
FLA. PE # 70592
C.A.N. 3538
JUL 09 2013

AL-FAROOQ CORPORATION
ENGINEERS & PRODUCT DEVELOPMENT
1235 S.W. 87 AVE
MIAMI, FLORIDA 33174
TEL. (305) 264-8100 FAX. (305) 262-6978
COMP-ANL\W13-09MNA

WOOD FRAME PUSH OUT CASEMENT WINDOW (L.M.I.)

MONTAG WINDOWS & DOORS, LLC.
1249 STIRLING ROAD, STE. 14
DANIA BEACH, FL 33004
TEL. (866) 562-1728 FAX. (866) 563-1728

revisions:

no	date	by	description
A	06.25.13		NO CHANGE THIS SHEET

date: 03-20-13
scale: 3/8"=1'-0"
dr. by: HAMID
chk. by:

drawing no. W13-09

sheet 3 of 13

DESIGN LOAD CAPACITY - PSF (FIXED VENT UNITS)			
WINDOW DIMS.		LAMINATED GLASS LAM. INSUL. GLASS	
WIDTH	LENGTH	EXT. (+)	INT. (−)
24"	60" (5)	65.0	85.0
30"		65.0	85.0
36"		65.0	85.0
42"		65.0	74.3
48"		65.0	65.0
24"	63" (5)	65.0	85.0
30"		65.0	85.0
36"		65.0	85.0
42"		65.0	74.3
48"		65.0	65.0
24"	72" (5)	65.0	85.0
30"		65.0	85.0
36"		65.0	85.0
42"		65.0	74.3
48"		65.0	65.0
24"	78" (6)	65.0	85.0
30"		65.0	85.0
36"		65.0	85.0
42"		65.0	74.3
48"		65.0	65.0
24"	84" (6)	65.0	85.0
30"		65.0	85.0
36"		65.0	84.3
42"		65.0	74.3
48"		65.0	65.0
24"	90" (7)	65.0	85.0
30"		65.0	85.0
36"		65.0	82.8
42"		65.0	74.1
48"		65.0	65.0
24"	96" (7)	65.0	85.0
30"		65.0	85.0
36"		65.0	81.6
42"		65.0	72.7
48"		65.0	65.0
24"	102" (7)	65.0	85.0
30"		65.0	85.0
36"		65.0	80.5
42"		65.0	71.5
48"		65.0	65.0

( ) = NO. OF ANCHORS PER JAMB

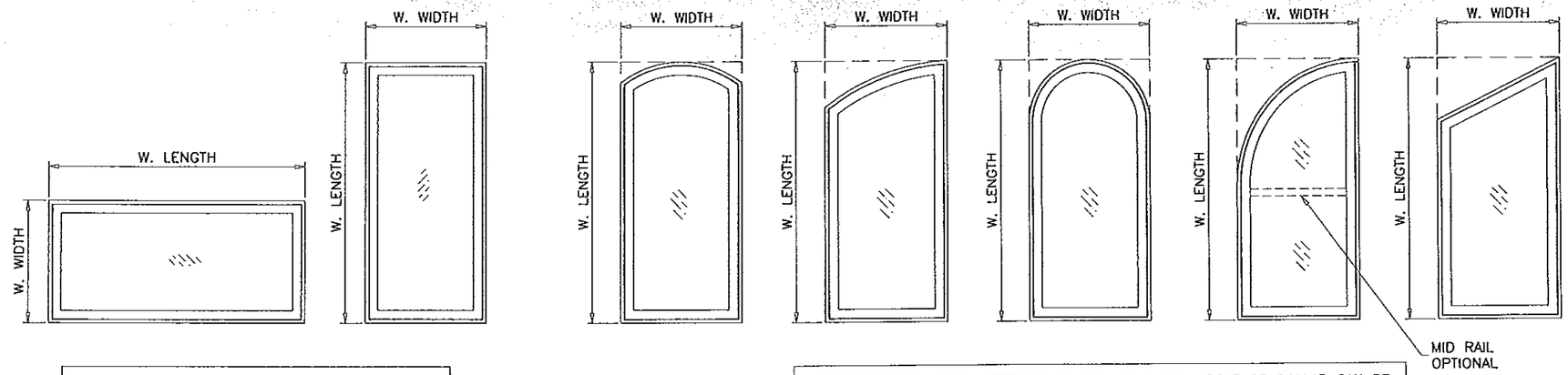

WIDTH AND LENGTH DIMENSIONS CAN BE ORIENTED VERTICALLY OR HORIZONTALLY AS SHOWN ABOVE.

ALLOWABLE LOADS FOR ALTERNATE SHAPES AS SHOWN ABOVE OR SIMILAR CAN BE VERIFIED BY INSCRIBING WINDOW SHAPE WITHIN SQUARE OR RECTANGLE AS SHOWN IN DOTTED LINES AND OBTAINING ALLOWABLE LOADS FROM THOSE SHAPES.

NOTE:
GLASS CAPACITIES ON THIS SHEET ARE BASED ON ASTM E1300-04 (3 SEC. GUSTS) AND FLORIDA BUILDING COMMISSION DECLARATORY STATEMENT DCA05-DEC-219

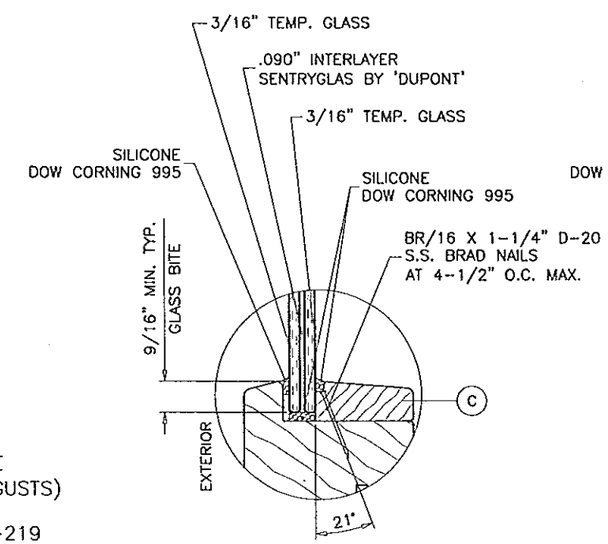

7/16" LAM. GLASS

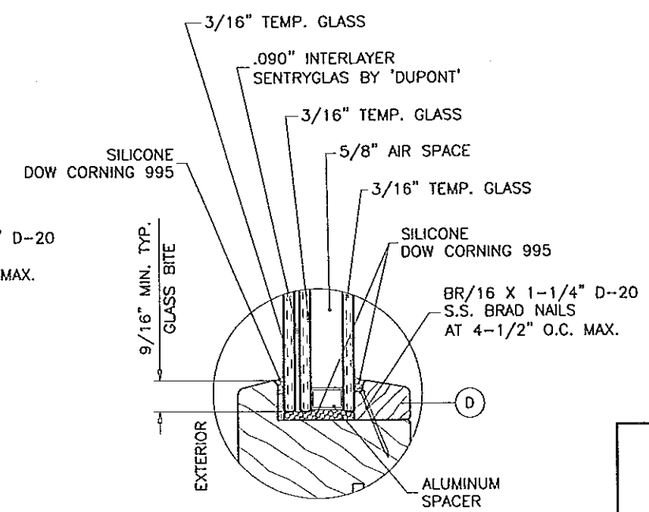

1-3/16" LAM. INSUL. GLASS

GLAZING OPTIONS

Approved as complying with the Florida Building Code
Date 07/25/2013
NOA# 13-05.14.17
Miami-Dade Product Control
By

Engr: JAVAD AHMAD
CIVIL
FLA. PE # 70592
C.A.N. 3538
JUL 09 2013

AL-FAROOQ CORPORATION
ENGINEERS & PRODUCT DEVELOPMENT
1235 S.W. 87 AVE
MIAMI, FLORIDA 33174
TEL. (305) 264-8100 FAX. (305) 262-6978
COMP-ANL\W13-09MNA

WOOD FRAME PUSH OUT CASEMENT WINDOW (L.M.I.)

MONTAG WINDOWS & DOORS, LLC.
1249 STIRLING ROAD, STE. 14
DANIA BEACH, FL 33004
TEL. (866) 562-1728 FAX. (866) 563-1728

revisions:

no	date	by	description
A	06.25.13		NO CHANGE THIS SHEET

date: 03-20-13
scale: 3/8"=1'-0"
dr. by: HAMID
chk. by:

drawing no.
W13-09

MULLION LOAD CAPACITY - PSF			
WINDOW DIMS.		MULLION 'J'	
WIDTH (W)	LENGTH (L)	EXT. (+)	INT. (-)
30"	78"	65.0	85.0
36"		65.0	85.0
42"		65.0	85.0
48"		65.0	85.0
54"		65.0	85.0
30"	84"	65.0	85.0
36"		65.0	85.0
42"		65.0	85.0
48"		65.0	84.5
54"		65.0	79.1
30"	90"	65.0	85.0
36"		65.0	85.0
42"		65.0	84.0
48"		65.0	76.8
54"		65.0	71.5
30"	96"	65.0	85.0
36"		65.0	85.0
42"		65.0	77.5
48"		65.0	70.5
30"	102"	65.0	85.0
36"		65.0	80.5
42"		65.0	71.5
48"		65.0	65.0

NOTES:

1. USE CHART ON THIS SHEET FOR SIDE BY SIDE CONNECTION CAPACITY OF WINDOW MULLION.
2. FOR CASEMENT WINDOW CAPACITY SEE SHEET 3 OF 13.
3. FOR FIXED WINDOW CAPACITY SEE SHEET 4 OF 13.
4. LOWER VALUES FROM STEPS 1, 2 OR 3 WILL APPLY TO ENTIRE SYSTEM.

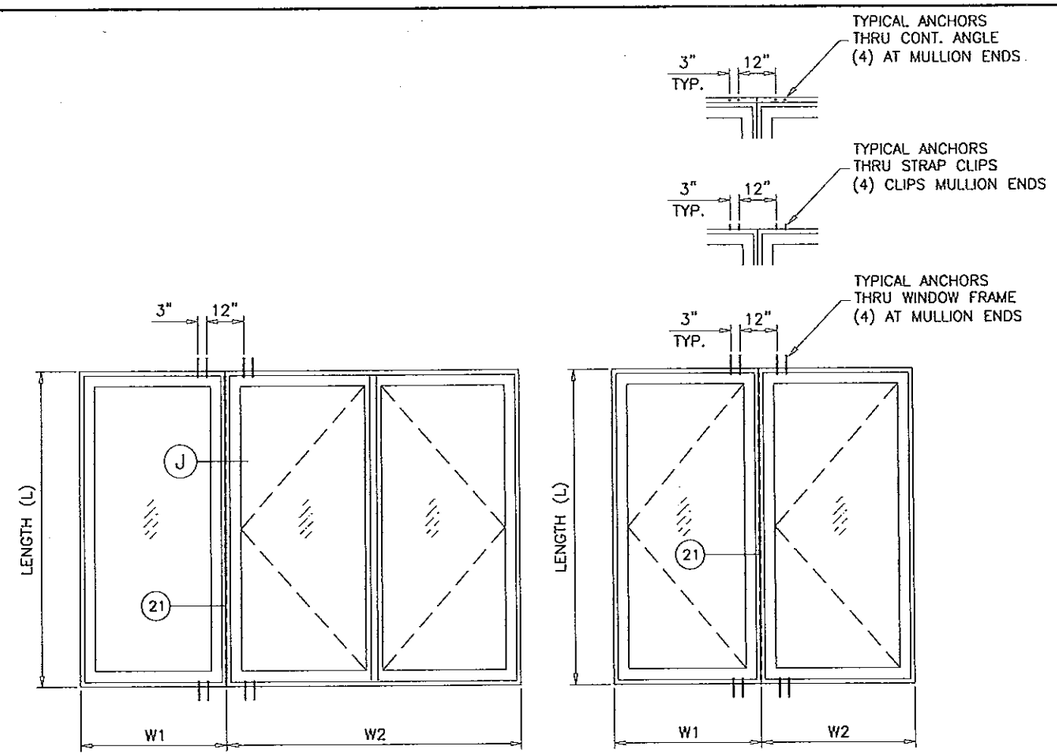

TYPICAL ELEVATIONS
SIDE BY SIDE WINDOWS
SIDE BY SIDE APPLIES TO TWO OR MORE WINDOWS

$$\text{WIDTH (W)} = \frac{W1 + W2}{2}$$

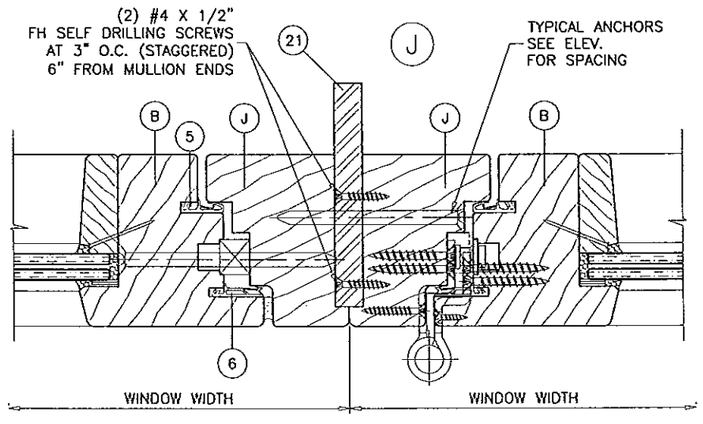

	Ix IN^4	Sx IN^3
WOOD	18.3142	10.3086
STEEL	2.670	1.333
TOTAL Ix STEEL	3.6804	

Approved as complying with the Florida Building Code
Date 07/25/2013
NOA# 13-0514.17
Miami Dade Product Control
By

Engr: JAVAD AHMAD
CIVIL
FLA. PE # 70592
C.A.N. 3538

JUL 19 2013

AL-FAROOQ CORPORATION
ENGINEERS & PRODUCT DEVELOPMENT
1235 S.W. 87 AVE
MIAMI, FLORIDA 33174
TEL. (305) 264-8100 FAX. (305) 262-6978

COMP-ANL\W13-09MNA

WOOD FRAME PUSH OUT CASEMENT WINDOW (L.M.I.)

MONTAG WINDOWS & DOORS, LLC.
1249 STIRLING ROAD, STE. 14
DANIA BEACH, FL 33004
TEL. (866) 562-1728 FAX. (866) 563-1728

revisions:

no	date	by	description
A	06.25.13	RER	REV. PER COMMENTS

date: 03-20-13
scale: 3/8" = 1"
dr. by: HAMID
chk. by:

drawing no.
W13-09

MULLION LOAD CAPACITY -- PSF			
WINDOW DIMS.		MULLION 'K'	
HEIGHT (H)	LENGTH (L)	EXT. (+)	INT. (-)
72"	72"	65.0	85.0
78"		65.0	85.0
84"		65.0	85.0
90"		65.0	85.0
96"		65.0	85.0
102"		65.0	85.0
72"	78"	65.0	85.0
78"		65.0	85.0
84"		65.0	85.0
90"		65.0	85.0
96"		65.0	82.5
102"		65.0	80.0
72"	84"	65.0	85.0
78"		65.0	84.6
84"		65.0	81.8
90"		65.0	79.1
96"		65.0	76.6
102"		65.0	74.3
72"	90"	65.0	81.8
78"		65.0	78.9
84"		65.0	76.3
90"		65.0	73.8
96"		65.0	71.5
102"		65.0	69.4
72"	96"	65.0	76.6
78"		65.0	73.5
84"		65.0	70.2
90"		65.0	67.2
96"		64.4	64.4
102"		61.8	61.8

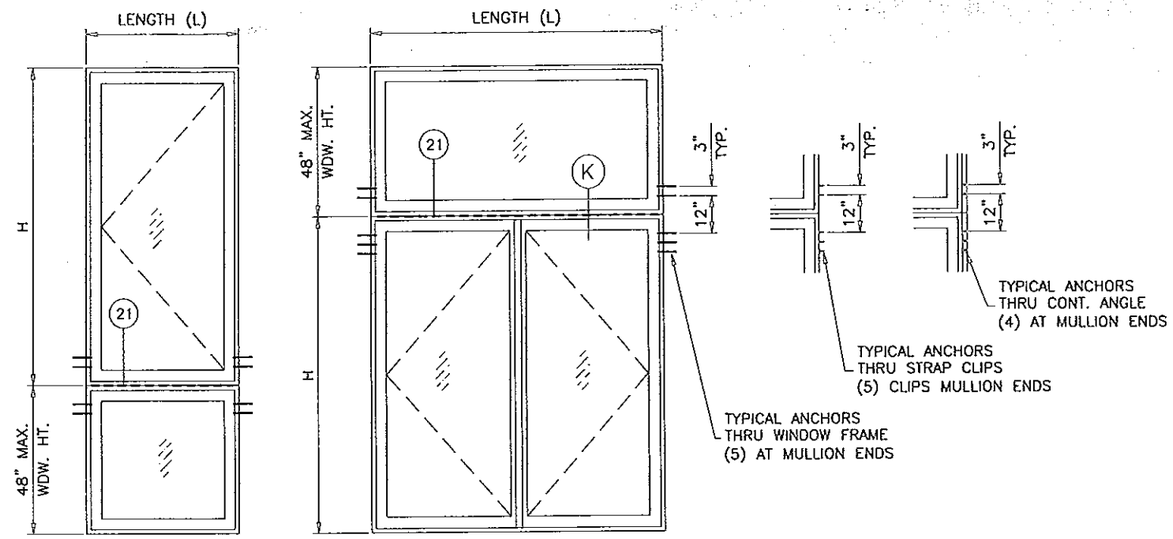

TYPICAL ELEVATIONS

TOP AND BOTTOM WINDOWS

TOP AND BOTTOM APPLIES TO TWO OR MORE WINDOWS

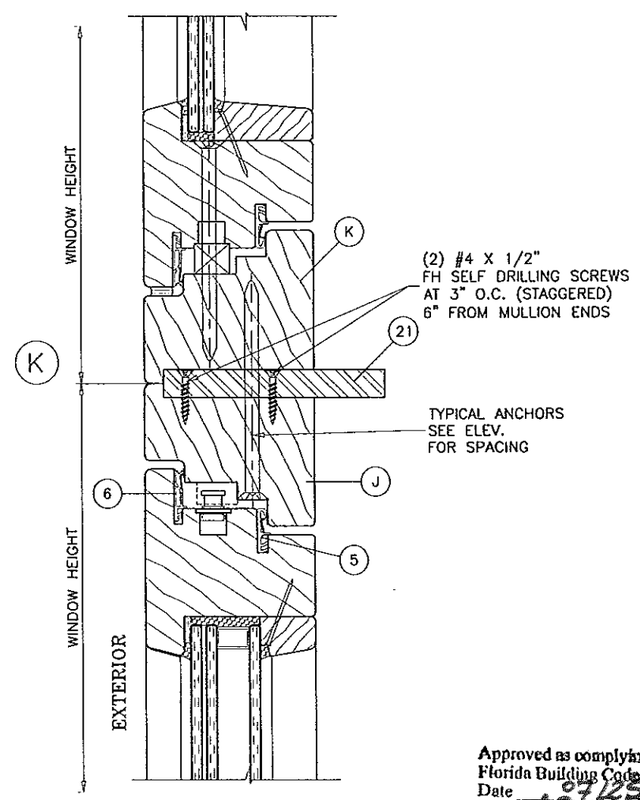

	Ix IN^4	Sx IN^3
WOOD	13.9078	7.8283
STEEL	2.670	1.333
TOTAL Ix STEEL	3.4373	

NOTES:

1. USE CHART ON THIS SHEET FOR TOP & BOTTOM MULLION CAPACITY.
2. FOR CASEMENT WINDOW CAPACITY SEE SHEET 3 OF 13.
3. FOR FIXED WINDOW CAPACITY SEE SHEET 4 OF 13.
4. LOWER VALUES FROM STEPS 1, 2 OR 3 WILL APPLY TO ENTIRE SYSTEM.

Approved as complying with the Florida Building Code
Date 07/25/13
NOA# 13-0514.17
Miami Dade Product Control
By

Engr: JAVAD AHMAD
CIVIL
FLA. PE # 70592
C.A.N. 3538
JUL 09 2013

AL-FAROOQ CORPORATION
ENGINEERS & PRODUCT DEVELOPMENT
1235 S.W. 57 AVE
MIAMI, FLORIDA 33174
TEL. (305) 264-3100 FAX. (305) 262-6978

COMP-ANL\W13-09MNA

WOOD FRAME PUSH OUT CASEMENT WINDOW (L.M.I.)

MONTAG WINDOWS & DOORS, LLC.
1249 STIRLING ROAD, STE. 14
DANIA BEACH, FL 33004
TEL. (866) 562-1728 FAX. (866) 563-1728

revisions:

no	date	by	description
A	06.25.13	RER	REV. PER COMMENTS

date: 03-20-13
scale: 3/8" = 1"
dr. by: HAMID
chk. by:

drawing no.
W13-09

sheet 6 of 13

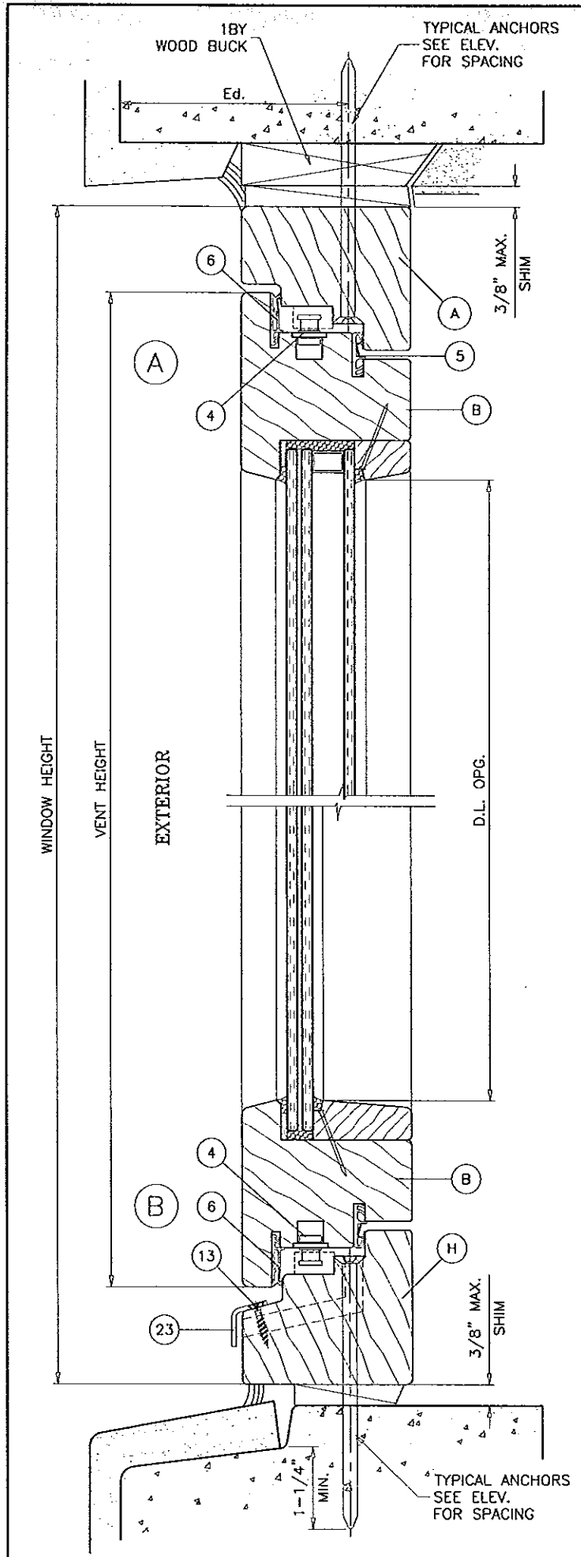

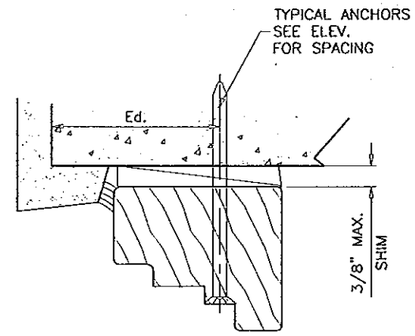

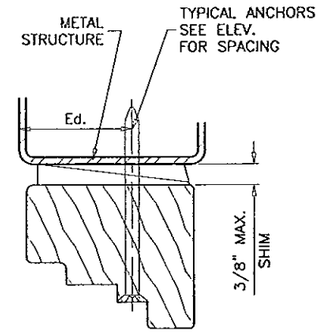

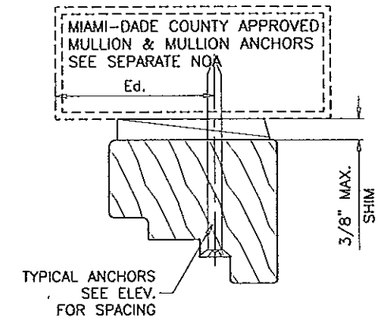

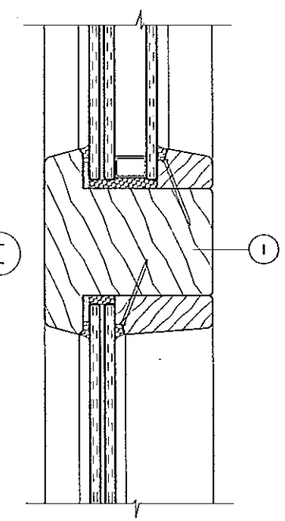

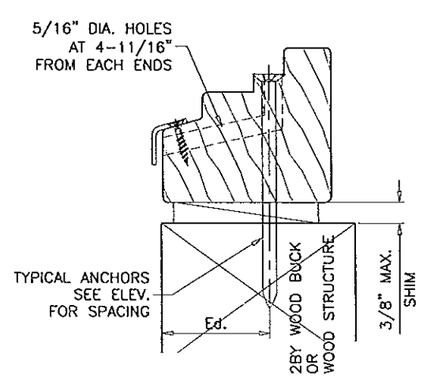

WOOD BUCKS AND METAL STRUCTURE NOT BY MONTAG MUST SUSTAIN LOADS IMPOSED BY GLAZING SYSTEM AND TRANSFER THEM TO THE BUILDING STRUCTURE.

TYPICAL ANCHORS: SEE ELEV. FOR SPACING

1/4" DIA. ULTRACON BY 'ELCO' (Fu=177 KSI, Fy=155 KSI)

INTO 2BY WOOD BUCKS OR WOOD STRUCTURES
1-1/2" MIN. PENETRATION INTO WOOD

THRU 1BY BUCKS INTO CONC. OR MASONRY
1-3/4" MIN. EMBED INTO CONCRETE (HEAD/SILL)
1-1/4" MIN. EMBED INTO CONC. OR MASONRY (JAMBS)

DIRECTLY INTO CONC. OR MASONRY
1-1/4" MIN. EMBED INTO CONCRETE (HEAD/SILL)
1-1/4" MIN. EMBED INTO CONC. OR MASONRY (JAMBS)

1/4" DIA. TEKS OR SELF DRILLING SCREWS (GRADE 5 CRS)

INTO MIAMI-DADE COUNTY APPROVED MULLIONS (MIN. THK. = 1/8")

INTO METAL STRUCTURES
STEEL : 12 GA. MIN. (Fy = 36 KSI MIN.)
ALUMINUM : 1/8" THK. MIN. (6063-T5 MIN.)
(STEEL IN CONTACT WITH ALUMINUM TO BE PLATED OR PAINTED)

Ed = ANCHOR EDGE DISTANCES

INTO CONCRETE AND MASONRY = 2-1/2" MIN.
INTO WOOD STRUCTURE = 1" MIN.
INTO METAL STRUCTURE = 3/4" MIN.

CONCRETE AT HEAD, SILL OR JAMBS f'c = 3000 PSI MIN.
C-90 HOLLOW/FILLED BLOCK AT JAMBS f'm = 2000 PSI MIN.

Approved as complying with the
Florida Building Code
Date 07/25/2013
NOA# 13-0624.17
Miami Dade Product Control
By

Engr: JAVAD AHMAD
CIVIL
FLA. PE # 70592
C.A.N. 3538

JUL 09 2013

AL-FAROOQ CORPORATION
ENGINEERS & PRODUCT DEVELOPMENT
1235 S.W. 87 AVE
MIAMI, FLORIDA 33174
TEL. (305) 264-8100 FAX. (305) 262-6978

COMP-ANL\W13-09MNA

WOOD FRAME PUSH OUT CASEMENT WINDOW (L.M.I.)

MONTAG WINDOWS & DOORS, LLC.
1249 STIRLING ROAD, STE. 14
DANIA BEACH, FL 33004
TEL. (866) 562-1728 FAX. (866) 563-1728

revisions:

no	date	by	description
A	06.25.13		REV. PER RER COMMENTS

date: 03-20-13
scale: 3/8" = 1"
dr. by: HAMID
chk. by:

drawing no.
W13-09

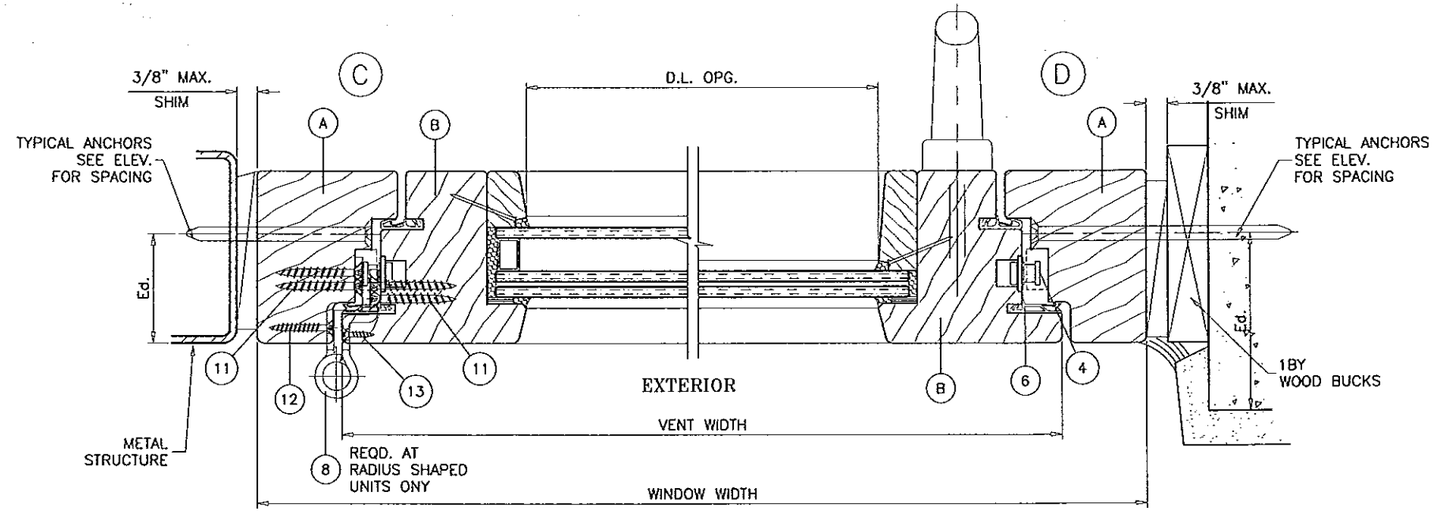

SINGLE VENT

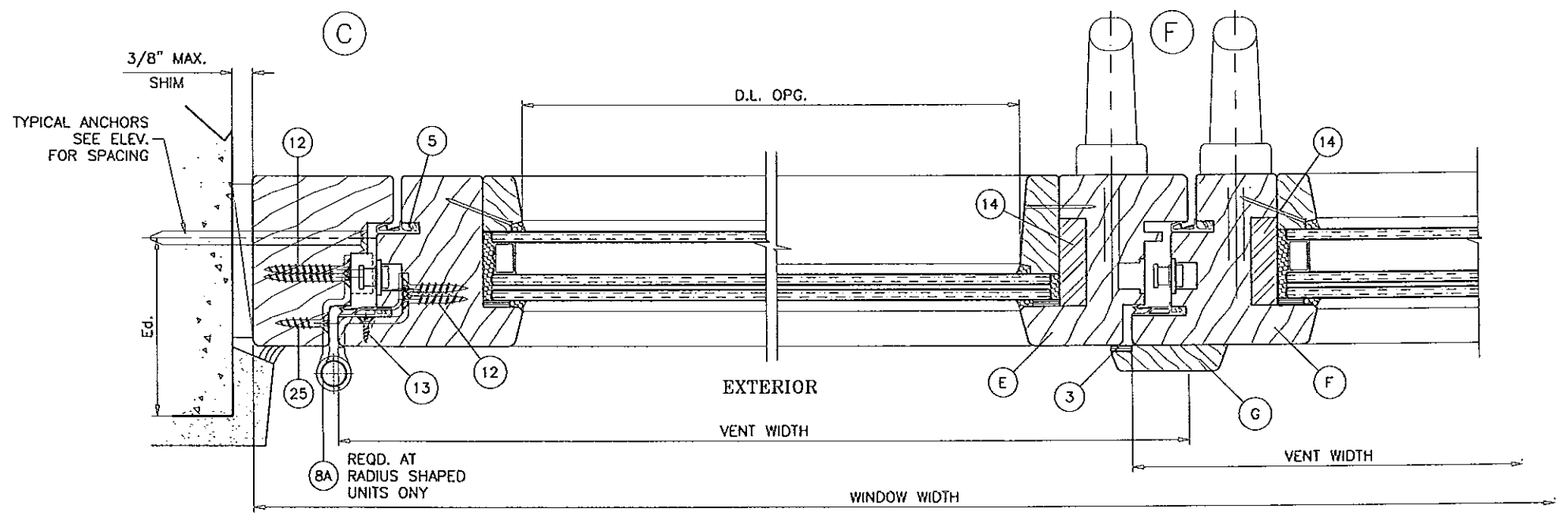

DUAL VENT

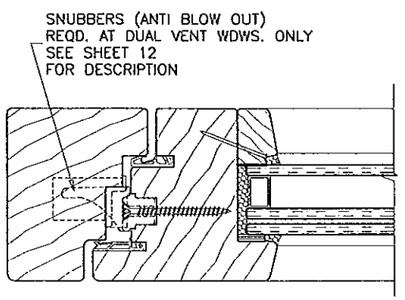

Approved as complying with the
Florida Building Code
Date 07/26/2013
NOA# 13-0514.17
Miami Dade Product Control
By

Engr: JAVAD AHMAD
CIVIL
FLA. PE # 70592
C.A.N. 3538

JUL 19 2013

AL-FAROOQ CORPORATION
ENGINEERS & PRODUCT DEVELOPMENT
1235 S.W. 87 AVE
MIAMI, FLORIDA 33174
TEL. (305) 264-8100 FAX. (305) 262-6978
COMP-ANL\W13-09MNA

WOOD FRAME PUSH OUT CASEMENT WINDOW (L.M.I.)

MONTAG WINDOWS & DOORS, LLC.
1249 STIRLING ROAD, STE. 14
DANIA BEACH, FL 33004
TEL. (866) 562-1728 FAX. (866) 563-1728

revisions:

no	date	by	description
A	06.25.13		REV. PER RER COMMENTS

date: 03-20-13
scale: 3/8" = 1"
dr. by: HAMID
chk. by:

drawing no.
W13-09

sheet 8 of 13

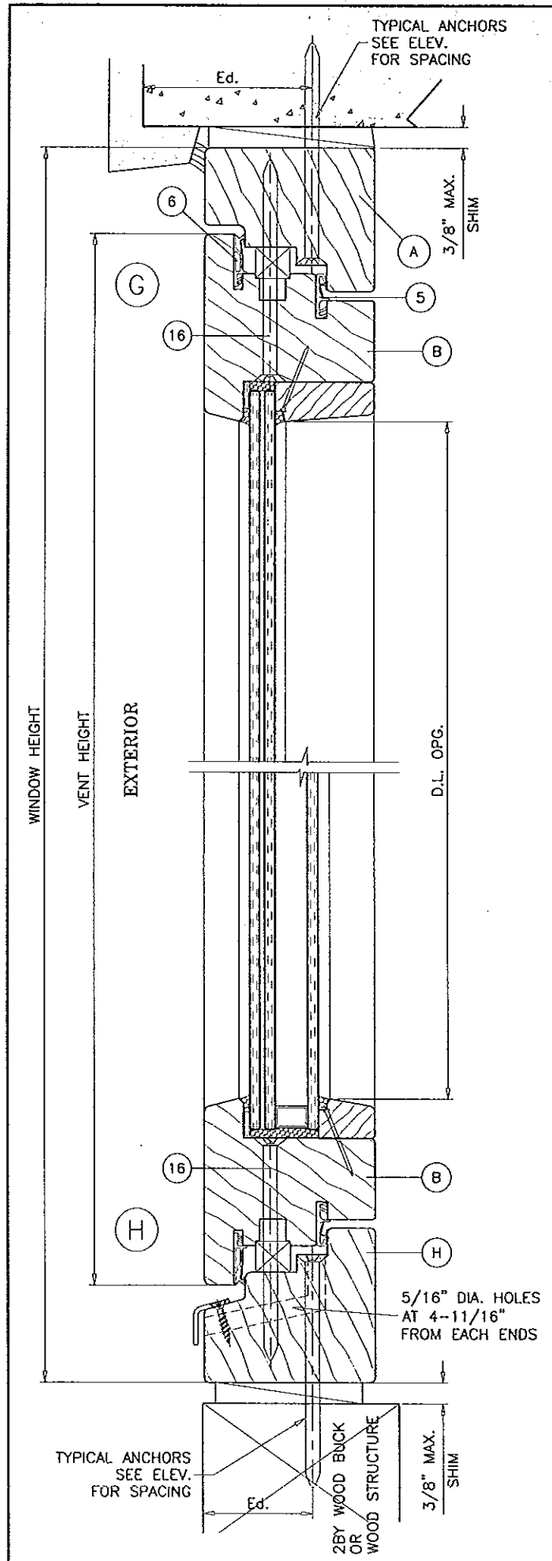

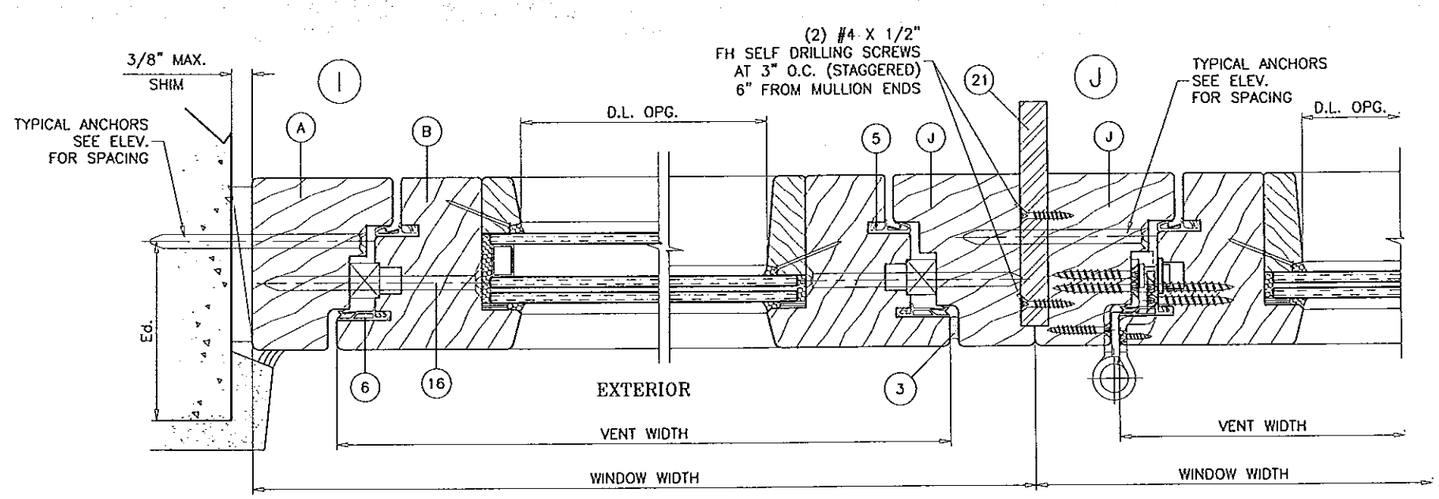

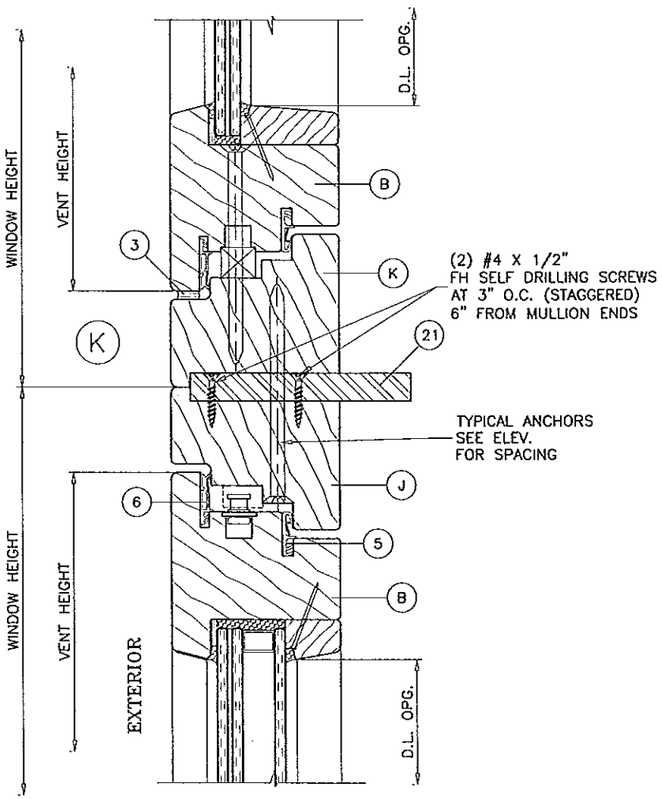

Approved as complying with the
Florida Building Code
Date 07/25/2013
NOA# 13-0514.17
Miami Dade Product Control
By

Engr: JAVAD AHMAD
CIVIL
FLA. PE # 70592
C.A.N. 3538

JUL 29 2013

AL-FAROOQ CORPORATION
ENGINEERS & PRODUCT DEVELOPMENT
1235 S.W. 87 AVE
MIAMI, FLORIDA 33174
TEL. (305) 264-8100 FAX. (305) 262-6978

COMP-ANL\W13-09MNA

WOOD FRAME PUSH OUT CASEMENT WINDOW (L.M.I.)

MONTAG WINDOWS & DOORS, LLC.
1249 STIRLING ROAD, STE. 14
DANIA BEACH, FL 33004
TEL. (866) 562-1728 FAX. (866) 563-1728

revisions:

no	date	by	description
A	06.25.13		REV. PER RER COMMENTS

date: 03-20-13
scale: 3/8" = 1"
dr. by: HAMID
chk. by:

drawing no.
W13-09

sheet 9 of 13

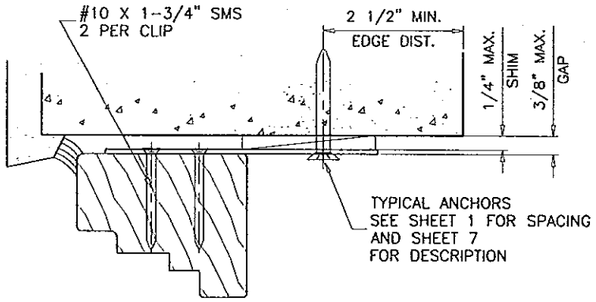

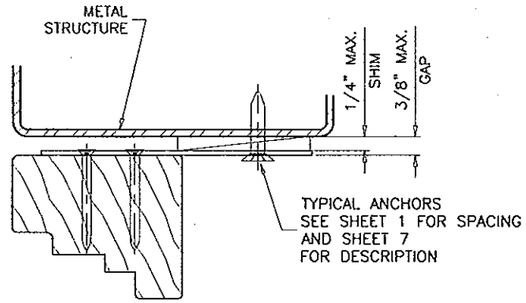

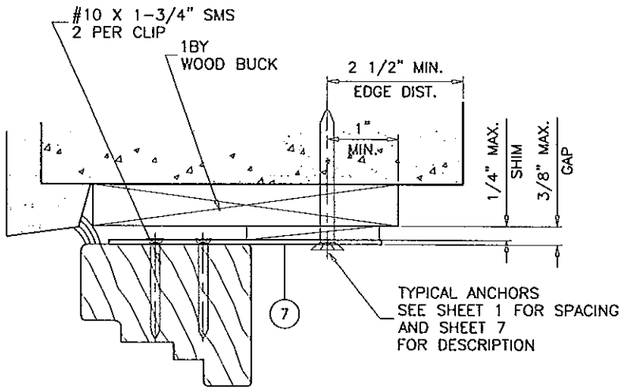

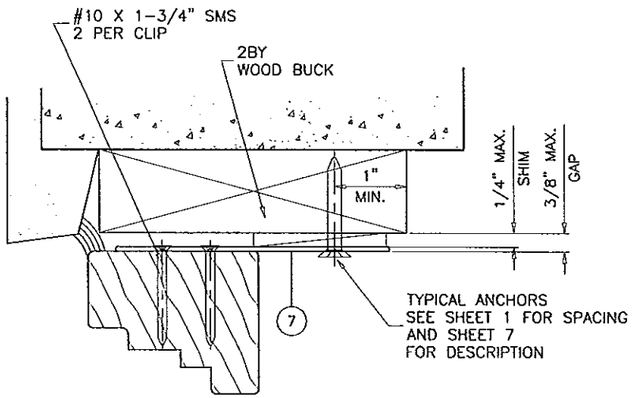

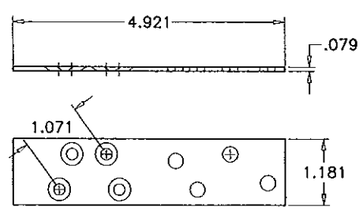

STRAP CLIP

(7) GALV. STEEL A328C
Fy = 38.5 KSI MIN.

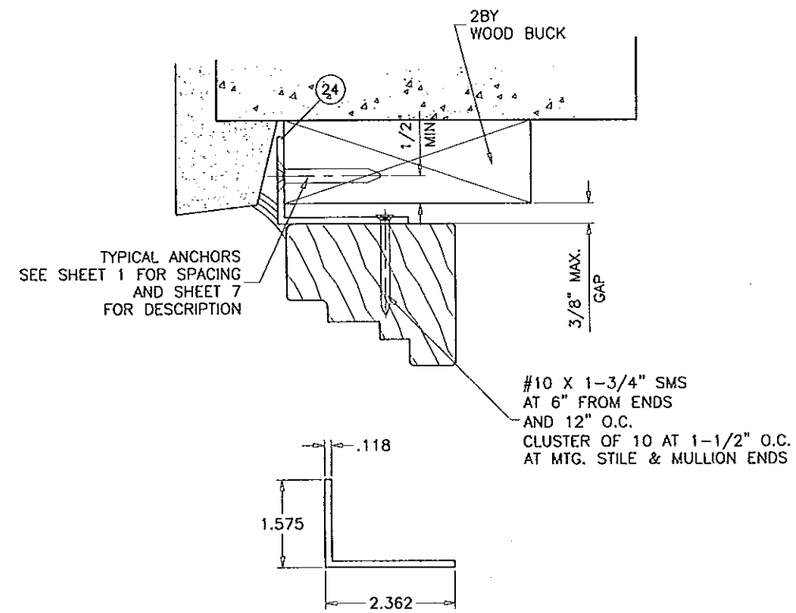

(24) CONTINUOUS ANGLE
6063-T6

Approved as complying with the
Florida Building Code
Date 07/25/2013
NOA# 13-0514.17
Miami-Dade Product Control
By

Engr: JAVAD AHMAD
CIVIL
FLA. PE # 70592
C.A.N. 3538

JUL 09 2013

AL-FAROOQ CORPORATION
ENGINEERS & PRODUCT DEVELOPMENT
1235 S.W. 87 AVE
MIAMI, FLORIDA 33174
TEL. (305) 264-8100 FAX. (305) 262-6978
COMP-ANL\W13-09MNA

WOOD FRAME PUSH OUT CASEMENT WINDOW (L.M.I.)

MONTAG WINDOWS & DOORS, LLC.
1249 STIRLING ROAD, STE. 14
DANIA BEACH, FL 33004
TEL. (866) 562-1728 FAX. (866) 563-1728

revisions:

no	date	by	description
A	06.25.13		REV. PER RER COMMENTS

date: 03-20-13
scale: 3/8" = 1"
dr. by: HAMID
chk. by:

drawing no.
W13-09

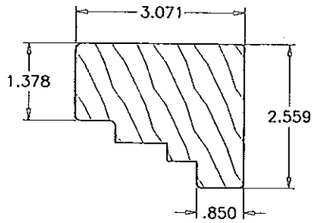

(A) FRAME HEAD/JAMB

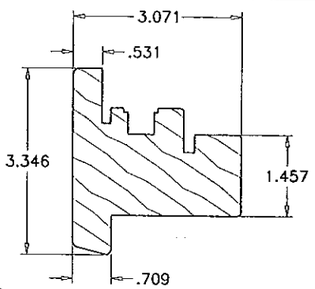

(B) SASH TOP & BOTTOM RAIL/JAMB STILE

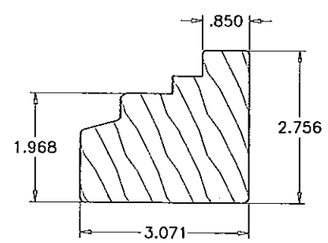

(H) THRESHOLD

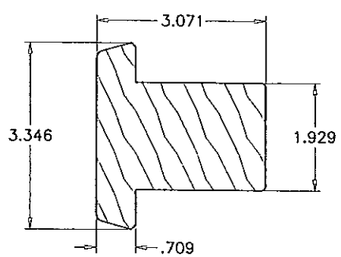

(I) MID RAIL

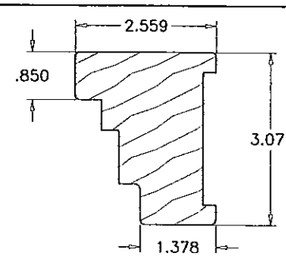

(J) FRAME JAMB MULLION

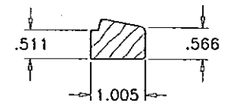

(C) GLAZING BEAD (LAM. GLASS)

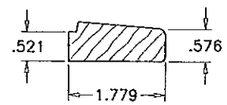

(D) GLAZING BEAD (LAM. INSUL. GLASS)

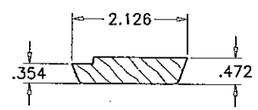

(G) ASTRAGAL

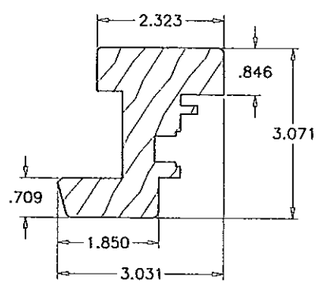

(E) SASH LOCK STILE (PASSIVE)

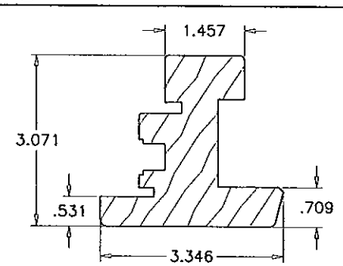

(E) SASH LOCK STILE (ACTIVE)

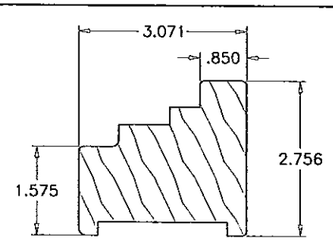

(K) FRAME TRANSOM MULLION

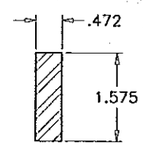

(14) LOCK STILE REINF.

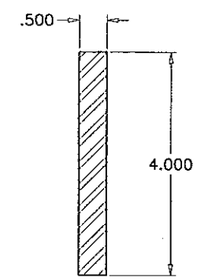

(21) MULLION FRAME REINF.

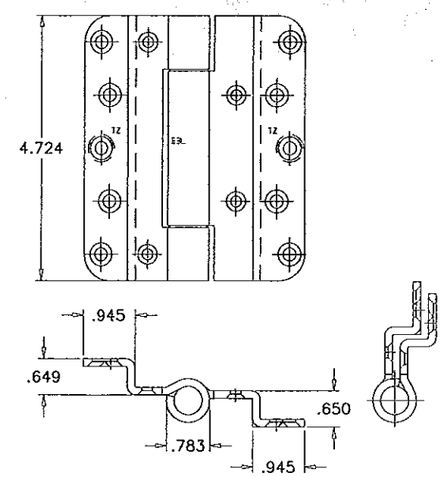

(8) BUTT HINGES (SIMONSWERK)

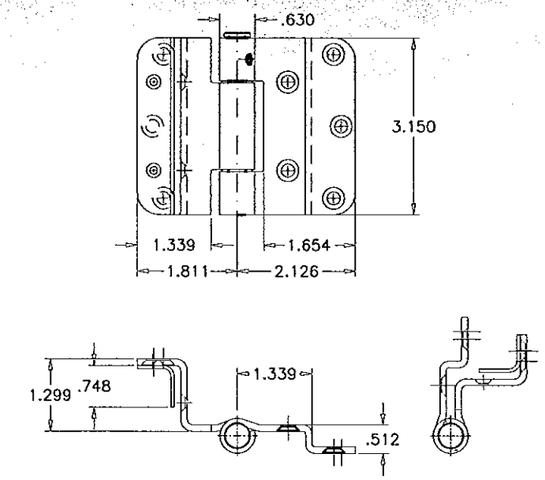

(8A) BUTT HINGES (BASYS)

Approved as complying with the Florida Building Code
Date 07/25/2013
NOA# 13-0514.17
Miami-Dade Product Control
By

Engr: JAVAD AHMAD
CIVIL
FLA. PE # 70592
C.A.N. 3538

JUL 09 2013

AL-FAROOQ CORPORATION
ENGINEERS & PRODUCT DEVELOPMENT
1235 S.W. 87 AVE
MIAMI, FLORIDA 33174
TEL. (305) 264-8100 FAX. (305) 262-6978
COMP-ANL\W13-09MNA

WOOD FRAME PUSH OUT CASEMENT WINDOW (L.M.I.)

MONTAG WINDOWS & DOORS, LLC.
1249 STIRLING ROAD, STE. 14
DANIA BEACH, FL 33004
TEL. (866) 562-1728 FAX. (866) 563-1728

revisions:

no	date	by	description
A	06.25.13		NO CHANGE THIS SHEET

date: 03-20-13
scale: 3/8" = 1"
dr. by: HAMID
chk. by:

drawing no.
W13-09

sheet 11 of 13

LOCKS:

MACO TRICOAT 12 POINT LOCK SYSTEM WITH KEEPERS
SURFACE MOUNT ACTIVATING HANDLE AT LOCK STILES
SURFACE MOUNT METALLIC KEEPERS FACING LOCKS
EACH FASTENED WITH (3) #10 X 2-1/4" WOOD SCREWS
(2) KEEPERS AT HEAD
(2) KEEPERS AT SILL
(4) KEEPERS AT EACH JAMB

BUTT HINGES: REQUIRED AT RADIUS SHAPED UNITS ONLY.

OPTION #1:
ST. STEEL TWO PIECE BUTT HINGES BY 'SIMONSWERK'
(2) PER VENT
AT 8" FROM TOP & BOTTOM

OPTION #2:
ST. STEEL TWO PIECE BUTT HINGES BY 'BASYS'
(2) PER VENT
AT 8" FROM TOP & BOTTOM

SNUBBERS:

ANTI-BLOW OUT PINS AT HINGE STILES
(6) PER VENT LOCATED AT 4-1/4" FROM TOP & BOTTOM
AND 9-3/4" O.C. MAX.
EACH FASTENED WITH (2) #10 X 2-3/4" FH WOOD SCREWS
GUIDES FACING PINS AT HINGE JAMBS
EACH FASTENED WITH (2) #10 X 2-3/4" FH WOOD SCREWS

ITEM	PART #	QUANTITY	DESCRIPTION	MATERIAL	MANF./SUPPLIER/REMARKS
A	--	3/ WDW.	FRAME HEAD/JAMB	MERANTI WOOD	--
B	-	4/ SASH	SASH TOP & BTTOM RAIL/JAMB STILE	MERANTI WOOD	-
C	--	4/ SASH	GALZING BEAD (LAM. GLASS)	MERANTI WOOD	-
D	-	4/ SASH	GLAZING BEAD (LAM. INSUL. GLASS)	MERANTI WOOD	--
E	-	1/ SASH	SASH LOCK STILE	MERANTI WOOD	TRUE FRENCH PASSIVE
F	-	1/ SASH	SASH LOCK STILE	MERANTI WOOD	TRUE FRENCH ACTIVE
G	-	1	ASTRAGAL	MERANTI WOOD	--
H	-	1	THRESHOLD	MERANTI WOOD	-
I	-	AS REQD.	MID RAIL	MERANTI WOOD	--
J	-	-	FRAME JAMB MULLION	MERANTI WOOD	--
K	-	--	FRAME TRANSOM MULLION	MERANTI WOOD	-
3	DC995	-	SEALANT	SILICONE	DOW CORNING
4	-	-	MULTIPOINT HARDWARE	--	MACO TRICOT
5	SF 1016-GG/2	-	INTERIOR W'STRIPPING	SILICONE	GOLL GMBH
6	SF 1029-GG/2	--	EXTERIOR W'STRIPPING	SILICONE	GOLL GMBH
7	-	--	STRAP CLIP	STEEL	-
8	--	2/ SASH	BUTT HINGES (AT RADIUS SHAPED UNITS ONLY)	ST. STEEL	SIMONSWERK
8A	-	2/ SASH	BUTT HINGES (AT RADIUS SHAPED UNITS ONLY)	ST. STEEL	BASYS
10	-	-	-	-	-
11	#10 X 1-3/4"	-	HINGE INSTALLATION SCREWS	STEEL	FH WOOD SCREWS
12	#7 X 1-3/16"	-	HINGE INSTALLATION SCREWS	STEEL	FH WOOD SCREWS
13	#4 X 1/2"	-	DRIP CAP SCREWS	STEEL	FH WOOD SCREWS
14	-	-	LOCK STILE REINF. BAR	STEEL	ASTM A283C
15	--	-	--	-	-
16	#14 X 4"	-	FIX. SASH FASTENER	--	FH WOOD SCREWS
17	#14 X 3-1/8"	--	-	STEEL	FH WOOD SCREWS
18	#14 X 4-3/4"	--	-	STEEL	FH WOOD SCREWS
19	-	AS REQD.	SNUBBERS	-	MACO TRICOT
20	#7 X 2"	-	--	STEEL	FH WOOD SCREWS
21	-	-	MULLION FRAME REINF. BAR	STEEL	ASTM A283C
23	-	-	5/8" X 5/8" DRIP COVER	ALUMINUM	TEMPER F25
24	-	AS REQD.	CONTINUOUS FIN	6063-T6	-
25	#10 X 1"	-	--	CRS	FH WOOD SCREWS

Approved as complying with the
Florida Building Code
Date: 07/25/2013
NOA# 13-0514.17
Miami-Dade Product Control
By

Engr: JAVAD AHMAD
CIVIL
FLA. PE # 70592
C.A.N. 3538
JUL. 19 2013

AL-FAROOQ CORPORATION
ENGINEERS & PRODUCT DEVELOPMENT
1235 S.W. 87 AVE
MIAMI, FLORIDA 33174
TEL. (305) 264-8100 FAX. (305) 262-6978
COMP-ANL\W13-09MNA

WOOD FRAME PUSH OUT CASEMENT WINDOW (L.M.I.)

MONTAG WINDOWS & DOORS, LLC.
1249 STIRLING ROAD, STE. 14
DANIA BEACH, FL 33004
TEL. (866) 562-1728 FAX. (866) 563-1728

revisions:

no	date	by	description
A	06.25.13		REV. PER RER COMMENTS

date: 03-20-13
scale: 3/8" = 1"
dr. by: HAMID
chk. by:

drawing no.
W13-09

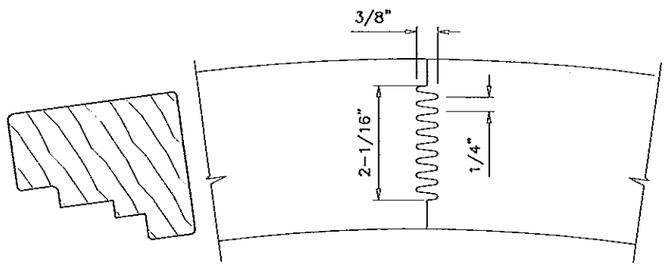

CIRCULAR WINDOWS
FINGER JOINT

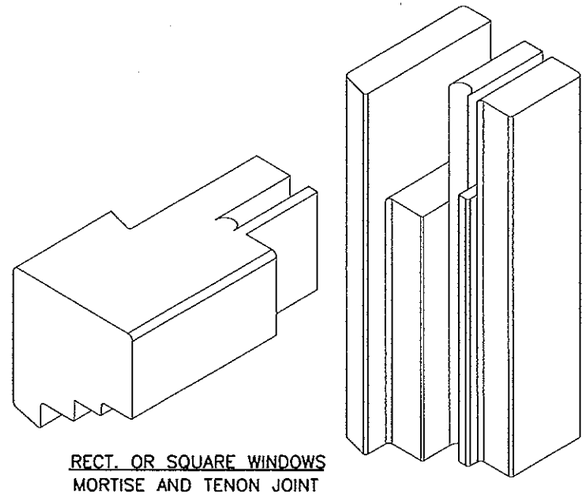

RECT. OR SQUARE WINDOWS
MORTISE AND TENON JOINT

FRAME CORNERS

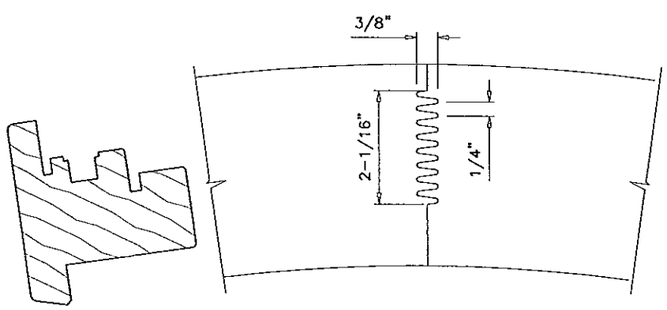

CIRCULAR WINDOWS
FINGER JOINT

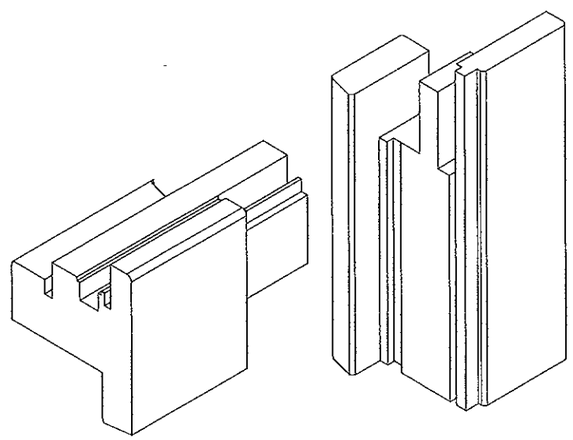

RECT. OR SQUARE WINDOWS
MORTISE AND TENON JOINT

VENT CORNERS

FRAME CORNERS SEALED/GLUED WITH
WATER PROOF ADHESIVE

Approved as complying with the
Florida Building Code
Date 07/25/2013
NOA# 13-0514.17
Miami-Dade Product Control
By

Engr: JAVAD AHMAD
CIVIL
FLA. PE # 70592
C.A.N. 3538

JUL 19 2013

AL-FAROOQ CORPORATION
ENGINEERS & PROJECT DEVELOPMENT
1235 S.W. 87 AVE
MIAMI, FLORIDA 33174
TEL. (305) 264-8100 FAX. (305) 262-6978
COMP-ANL\W13-09MNA

WOOD FRAME PUSH OUT CASEMENT WINDOW (L.M.I.)

MONTAG WINDOWS & DOORS, LLC.
1249 STIRLING ROAD, STE. 14
DANIA BEACH, FL 33004
TEL. (866) 562-1728 FAX. (866) 563-1728

revisions:

no	date	by	description
A	06.25.13	REV. PER RER	COMMENTS

date: 03-20-13
scale: 3/8" = 1"
dr. by: HAMID
chk. by:

drawing no.
W13-09