MIAMI-DADE COUNTY
DEPARTMENT OF REGULATORY AND ECONOMIC RESOURCES (RER)
BOARD AND CODE ADMINISTRATION DIVISION

MIAMI-DADE COUNTY
PRODUCT CONTROL SECTION
11805 SW 26 Street, Room 208
T (786) 315-2590 F (786) 315-2599
www.miamidade.gov/economy

NOTICE OF ACCEPTANCE (NOA)

New Age Windows & Doors Corp.
7196 N. W. 77 Terr.
Medley, FL 33166

SCOPE:

This NOA is being issued under the applicable rules and regulations governing the use of construction materials. The documentation submitted has been reviewed and accepted by Miami-Dade County RER - Product Control Section to be used in Miami Dade County and other areas where allowed by the Authority Having Jurisdiction (AHJ).

This NOA shall not be valid after the expiration date stated below. The Miami-Dade County Product Control Section (In Miami Dade County) and/or the AHJ (in areas other than Miami Dade County) reserve the right to have this product or material tested for quality assurance purposes. If this product or material fails to perform in the accepted manner, the manufacturer will incur the expense of such testing and the AHJ may immediately revoke, modify, or suspend the use of such product or material within their jurisdiction. RER reserves the right to revoke this acceptance, if it is determined by Miami-Dade County Product Control Section that this product or material fails to meet the requirements of the applicable building code.

This product is approved as described herein, and has been designed to comply with the Florida Building Code, including the High Velocity Hurricane Zone.

DESCRIPTION: Series HRW-300 Aluminum Horizontal Sliding Glass Window

APPROVAL DOCUMENT: Drawing No. **W99-80**, titled "Series HRW300 Horiz. Rolling Window", sheets 1 through 6 of 6, prepared by Al Farooq Corporation, dated 11/30/99 with revision H dated 04/24/12, signed and sealed by Javad Ahmad, P.E., bearing the Miami-Dade County Product Control Renewal stamp with the Notice of Acceptance number and expiration date by the Miami-Dade County Product Control Section.

MISSILE IMPACT RATING: None. Approved Hurricane Protection devices, complying w/ FBC, as applicable are required.

LABELING: Each unit shall bear a permanent label with the manufacturer's name or logo, city, state, model/series, and following statement: "Miami-Dade County Product Control Approved", unless otherwise noted herein.

RENEWAL of this NOA shall be considered after a renewal application has been filed and there has been no change in the applicable building code negatively affecting the performance of this product.

TERMINATION of this NOA will occur after the expiration date or if there has been a revision or change in the materials, use, and/or manufacture of the product or process. Misuse of this NOA as an endorsement of any product, for sales, advertising or any other purposes shall automatically terminate this NOA. Failure to comply with any section of this NOA shall be cause for termination and removal of NOA.

ADVERTISEMENT: The NOA number preceded by the words Miami-Dade County, Florida, and followed by the expiration date may be displayed in advertising literature. If any portion of the NOA is displayed, then it shall be done in its entirety.

INSPECTION: A copy of this entire NOA shall be provided to the user by the manufacturer or its distributors and shall be available for inspection at the job site at the request of the Building Official.

This NOA **renews NOA # 12-0430.03** and consists of this page 1 and evidence pages E-1 and E-2, as well as approval document mentioned above.

The submitted documentation was reviewed by **Jaime D. Gascon, P.E.**

MIAMI-DADE COUNTY APPROVED

J. Gascon
1/23/13

New Age Windows & Doors Corp.

NOTICE OF ACCEPTANCE: EVIDENCE SUBMITTED

A. DRAWINGS

1. Drawing No. **W99-80**, titled "Series HRW300 Horiz. Rolling Window", sheets 1 through 6 of 6, prepared by Al Farooq Corporation, dated 11/30/99 with revision H dated 04/24/12, signed and sealed by Javad Ahmad, P.E.
(Submitted under previous NOA#12-0430.03)

B. TESTS

1. Test reports on 1) Air Infiltration Test, per FBC, TAS 202-94
2) Uniform Static Air Pressure Test, Loading per TAS 202-94
3) Water Resistance Test, per TAS 202-94
4) Forced Entry Test, per FBC TAS 202-94
along with marked-up drawings and installation diagram of an aluminum sliding glass window, prepared by Fenestration Testing Laboratory, Inc., Test Report No(s) **FTL-5670 (08096)**, dated 08/08/2008, signed and sealed by Carlos S. Rionda, P. E.
(Submitted under previous NOA# 08-0926.11)

2. Test reports on 1) Air Infiltration Test, per PA 202-94
2) Uniform Static Air Pressure Test, Loading per PA 202-94
3) Water Resistance Test, per PA 202-94
4) Forced Entry Test, per SFBC 3603.2 (b) and PA 202-94
along with marked-up drawings and installation diagram of an aluminum sliding glass window, prepared by Fenestration Testing Laboratory, Inc., Test Report No(s) **FTL-2409 (99076), FTL –2412 (99079)** and **FTL-2413 (99077)**, all dated November 17, 1999, witnessed by Jose D. Mitrani, P.E. and Aldo P. Gonzales, P.E. , signed and sealed by Aldo P. Gonzales, P. E ***(Submitted under previous NOA #00-0519.02)***

C. CALCULATIONS

1. Anchor verification calculations and structural analysis, complying with FBC-2010, prepared by Al-Farooq Corporation, dated 04/20/12, signed and sealed by Javad Ahmad, P.E. ***(Submitted under previous NOA # 12-0430.03)***

2. Glazing complies with ASTM E1300-04.

D. QUALITY ASSURANCE

1. Miami-Dade Department of Regulatory and Economic Resources (RER)

E. MATERIAL CERTIFICATIONS

1. None.

Jaime D. Gascón, P.E.
Product Control Section Supervisor
NOA No. 13-0521.12
Expiration Date: December 14, 2018
Approval Date: August 1, 2013

NOTICE OF ACCEPTANCE: EVIDENCE SUBMITTED

F. STATEMENTS

1. Statement letter of conformance, complying with FBC-2010, dated May 3, 2013, prepared by Al-Farooq Corporation, signed and sealed by Javad Ahmad, P.E.
2. Statement letter of conformance, complying with FBC-2010, and of no financial interest, dated 04/20/12, prepared by Al-Farooq Corporation, signed and sealed by Javad Ahmad, P.E. ***(Submitted under previous NOA # 12-0430.03)***
3. Statement letter of compliance, as part of the test reports, issued by Fenestration testing laboratory. ***(Submitted under previous NOA# 08-0926.11)***

G. OTHER

1. Notice of Acceptance No. **12-0430.03**, issued to New Age Windows & Doors Corp. for their "**Series HRW-300 Aluminum Horizontal Sliding Glass Window**, approved on 08/02/12 and expiring on 12/14/13.

Jaime D. Gascon, P.E.
Product Control Section Supervisor
NOA No. 13-0521.12
Expiration Date: December 14, 2018
Approval Date: August 1, 2013

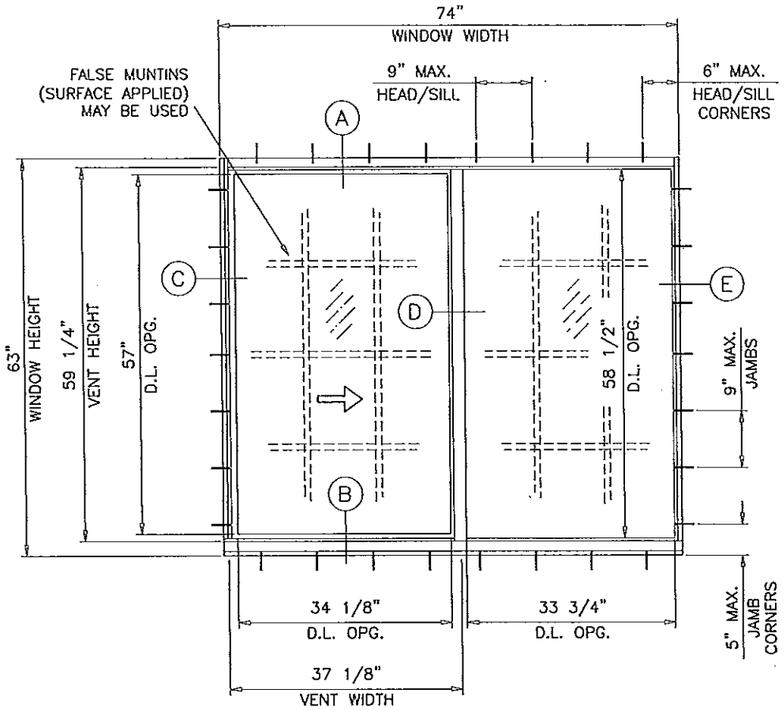

DAYLITE OPENINGS:

DLO WIDTH = $\frac{\text{WINDOW WIDTH} - 6.125}{2}$ (FIXED & VENT)

DLO HEIGHT = WINDOW HEIGHT − 4.562 (FIXED LITE)
= WINDOW HEIGHT − 5.938 (VENT.)

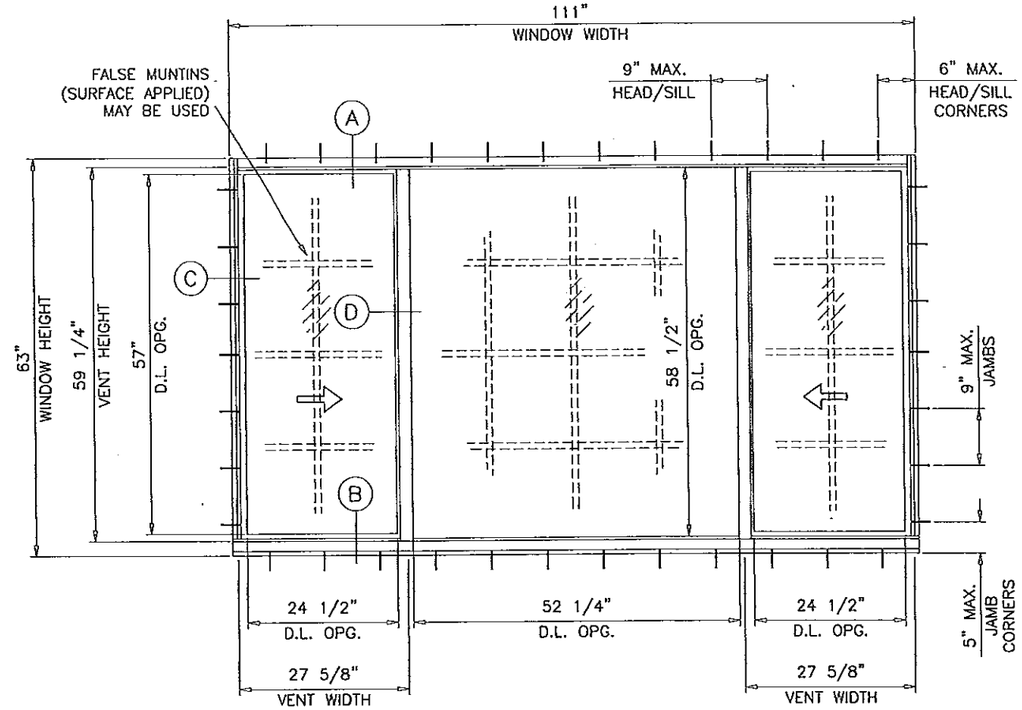

DAYLITE OPENINGS:

DLO WIDTH = $\frac{\text{WINDOW WIDTH} - 9.750}{2}$ (FIXED LITE)

= $\frac{\text{WINDOW WIDTH} - 9.750}{4}$ (VENT)

DLO HEIGHT = WINDOW HEIGHT − 4.562 (FIX. LITE)
= WINDOW HEIGHT − 5.938 (VENT.)

TYPICAL ELEVATIONS

SERIES HRW-300
ALUMINUM HORIZONTAL ROLLING WDW.

DESIGN LOAD RATINGS FOR THESE WINDOWS TO BE AS PER CHARTS SHOWN ON SHEET 2.

APPROVAL APPLIES TO SINGLE UNITS OR SIDE BY SIDE COMBINATIONS OF H.R./H.R. OR HORIZONTAL ROLLING WITH OTHER MIAMI-DADE COUNTY APPR'D WINDOWS USING MIAMI-DADE COUNTY APPROVED MULLIONS IN BETWEEN.
LOWER DESIGN PRESSURE FROM WINDOWS OR MULLION APPROVAL WILL APPLY TO ENTIRE SYSTEM.

THIS PRODUCT HAS BEEN DESIGNED AND TESTED TO COMPLY WITH THE REQUIREMENTS OF THE FLORIDA BUILDING CODE INCLUDING HIGH VELOCITY HURRICANE ZONE (HVHZ).

WOOD BUCKS BY OTHERS, MUST BE ANCHORED PROPERLY TO TRANSFER LOADS TO THE STRUCTURE.

ANCHORS SHALL BE AS LISTED, SPACED AS SHOWN ON DETAILS, ANCHORS EMBEDMENT TO BASE MATERIAL SHALL BE BEYOND WALL DRESSING OR STUCCO.

ANCHORING OR LOADING CONDITIONS NOT SHOWN IN THESE DETAILS ARE NOT PART OF THIS APPROVAL.

A LOAD DURATION INCREASE IS USED IN DESIGN OF ANCHORS INTO WOOD ONLY.

MATERIALS INCLUDING BUT NOT LIMITED TO STEEL/METAL SCREWS, THAT COME INTO CONTACT WITH OTHER DISSIMILAR MATERIALS SHALL MEET THE REQUIREMENTS OF THE FLORIDA BLDG. CODE SECTION 2003.8.4.

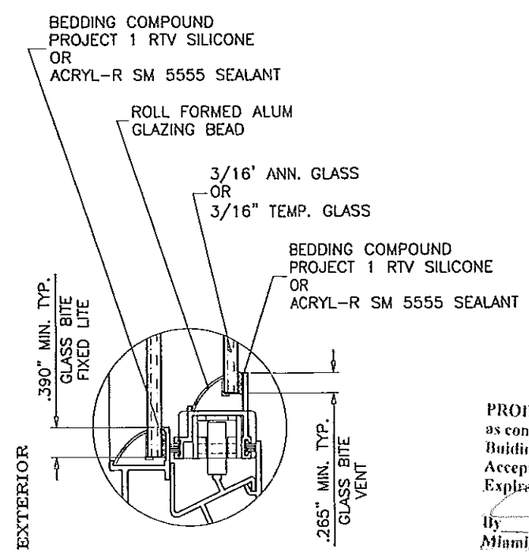

GLAZING DETAIL

INSTALLATION OF THIS PRODUCT IN THE HVHZ AREA REQUIRES THE USE OF APPROVED SHUTTERS OR EXTERNAL PROTECTION DEVICES COMPLYING WITH HVHZ REQUIREMENTS.

INSTALLATION OF THIS SYSTEM OUTSIDE THE HVHZ AREA SHALL MEET THE APPLICABLE REQUIREMENTS FOR WIND BORNE DEBRIS PROTECTION.

PRODUCT RENEWED
as complying with the Florida Building Code
Acceptance No. 13-0521.12
Expiration Date 12/14/2018
By
Miami Dade Product Control

Engr: JAVAD AHMAD
CIVIL
FLA. PE # 70592
C.A.N. 3538

APR 26 2012

PRODUCT REVISED
as complying with the Florida Building Code
Acceptance No. 12.0430.03
Expiration Date 12/14/2013
By
Miami Dade Product Control

AL-FAROOQ CORPORATION
ENGINEERS & PRODUCT DEVELOPMENT
1235 S.W. 87 AVE
MIAMI, FLORIDA 33174
TEL. (305) 264-8100 FAX. (305) 262-6978

COMP-ANL\W99-80NA

SERIES HRW-300 ALUM. HORIZ. ROLLING WDW. (N.L.)

NEW AGE WINDOWS & DOORS
7196 N.W. 77TH TERRACE
MEDLEY, FL. 33166
TEL. (305) 889-0703 FAX. (305) 889-0710

revisions:

no	date	by	description
E	09.11.08		UPDATED FOR 2007 FBC
F	12.02.08		NO CHANGE THIS SHEET
G	12.30.08		REV. PER BCCO COMMENTS
H	04.24.12		UPDATED TO 2010 FBC

date: 11-30-99
scale: 1/2"=1'-0"
dr. by: HAMID
chk. by:

drawing no.
W99-80

sheet 1 of 6

DESIGN LOAD CAPACITY – PSF (XO OR OX SIZES)

WINDOW DIMS.		A	ANCHORS TYPE 'A' 3/16" ANN. GLASS		ANCHORS TYPE 'A' 3/16" TEMP. GLASS		ANCHORS TYPE 'B' 3/16" TEMP. GLASS	
WIDTH	HEIGHT		EXT.(+)	INT.(–)	EXT.(+)	INT.(–)	EXT.(+)	INT.(–)
26-1/2"	26" (3)	3	70.0	125.0	70.0	210.0	70.0	210.0
37"		4	70.0	120.2	70.0	153.9	70.0	153.9
53-1/8"		6	70.0	86.6	70.0	110.8	70.0	110.8
74"		8	70.0	86.6	70.0	110.8	70.0	110.8
26-1/2"	38-3/8" (4)	3	70.0	125.0	70.0	194.8	70.0	194.8
37"		4	70.0	110.8	70.0	141.5	70.0	141.5
53-1/8"		6	70.0	79.0	70.0	101.1	70.0	101.1
74"		8	54.9	54.9	70.0	70.3	70.0	70.3
26-1/2"	50-5/8" (6)	3	70.0	125.0	70.0	158.0	70.0	186.1
37"		4	70.0	102.7	70.0	121.0	70.0	131.2
53-1/8"		6	70.0	75.4	70.0	94.4	70.0	96.3
74"		8	54.7	54.7	70.0	70.0	70.0	70.0
26-1/2"	63" (6)	3	70.0	121.0	70.0	121.0	70.0	151.5
37"		4	70.0	91.1	70.0	91.2	70.0	114.1
53-1/8"		6	60.7	60.7	69.1	69.1	70.0	86.4
74"		8	47.1	47.1	55.9	55.9	70.0	70.0
24"	24" (3)	3	70.0	125.0	70.0	210.0	70.0	210.0
36"		4	70.0	124.3	70.0	159.0	70.0	159.0
48"		5	70.0	95.5	70.0	122.2	70.0	122.2
60"		7	70.0	95.5	70.0	122.2	70.0	122.2
72"		8	70.0	95.5	70.0	122.2	70.0	122.2
24"	36" (4)	3	70.0	125.0	70.0	210.0	70.0	210.0
36"		4	70.0	115.9	70.0	148.0	70.0	148.0
48"		5	70.0	88.7	70.0	113.5	70.0	113.5
60"		7	68.9	68.9	70.0	88.2	70.0	88.2
72"		8	59.0	59.0	70.0	75.6	70.0	75.6
24"	48" (5)	3	70.0	125.0	70.0	183.6	70.0	210.0
36"		4	70.0	106.7	70.0	132.7	70.0	136.3
48"		5	70.0	83.1	70.0	106.1	70.0	106.1
60"		7	68.9	68.9	70.0	88.2	70.0	88.2
72"		8	56.4	56.4	70.0	72.1	70.0	72.1
24"	60" (6)	3	70.0	125.0	70.0	139.9	70.0	175.1
36"		4	70.0	98.6	70.0	99.2	70.0	124.1
48"		5	70.0	74.6	70.0	79.4	70.0	99.3
60"		7	55.8	55.8	68.1	68.1	70.0	82.7
72"		8	50.9	50.9	61.2	61.2	70.0	72.1

A = NO. OF ANCHORS PER HEAD & SILL
( ) = NO. OF ANCHORS PER JAMB

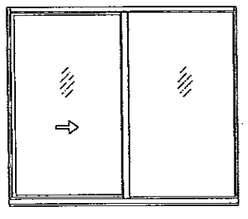

NOTE:
GLASS CAPACITIES ON THIS SHEET ARE BASED ON ASTM E1300-04 (3 SEC. GUSTS) AND FLORIDA BUILDING COMMISSION DECLARATORY STATEMENT DCA05-DEC-219

DESIGN LOAD CAPACITY – PSF (XOX SIZES)

WINDOW DIMS.		A	ANCHORS TYPE 'A' 3/16" ANN. GLASS		ANCHORS TYPE 'A' 3/16" TEMP. GLASS	
WIDTH	HEIGHT		EXT.(+)	INT.(–)	EXT.(+)	INT.(–)
74"	26" (3)	8	70.0	86.7	70.0	86.7
106-1/4"		12	70.0	86.6	70.0	86.6
111"		12	70.0	86.6	70.0	86.6
74"	38-3/8" (4)	8	70.0	86.7	70.0	86.7
106-1/4"		12	57.7	57.7	57.7	57.7
111"		12	55.0	55.0	55.0	55.0
74"	50-5/8" (6)	8	70.0	80.3	70.0	80.3
106-1/4"		12	57.7	57.7	57.7	57.7
111"		12	55.0	55.0	55.0	55.0
74"	63" (6)	8	69.8	69.8	70.0	72.5
106-1/4"		12	47.7	47.7	56.5	56.5
111"		12	47.1	47.1	55.0	55.0
72"	24" (3)	8	70.0	95.5	70.0	95.5
84"		9	70.0	95.5	70.0	95.5
96"		11	70.0	95.5	70.0	95.5
108"		12	70.0	95.5	70.0	95.5
72"	36" (4)	8	70.0	89.5	70.0	89.5
84"		9	70.0	75.0	70.0	75.0
96"		11	64.6	64.6	64.6	64.6
108"		12	59.0	59.0	59.0	59.0
72"	48" (5)	8	70.0	83.6	70.0	83.6
84"		9	70.0	74.6	70.0	74.6
96"		11	64.6	64.6	64.6	64.6
108"		12	56.7	56.7	56.7	56.7
72"	60" (6)	8	70.0	75.8	70.0	78.3
84"		9	59.9	59.9	68.7	68.7
96"		11	53.6	53.6	62.0	62.0
108"		12	50.9	50.9	56.7	56.7

A = NO. OF ANCHORS PER HEAD & SILL
( ) = NO. OF ANCHORS PER JAMB

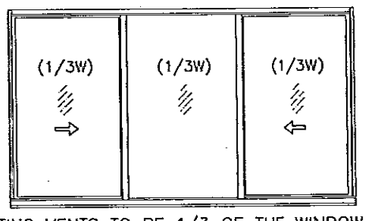

OPERATING VENTS TO BE 1/3 OF THE WINDOW WIDTH

PRODUCT RENEWED
as complying with the Florida Building Code
Acceptance No. 13-0521.12
Expiration Date 12/14/2018
By:
Miami Dade Product Control

DESIGN LOAD CAPACITY – PSF (XOX SIZES)

WINDOW DIMS.		A	ANCHORS TYPE 'A' 3/16" ANN. GLASS AT VENTS AND FIX. LITE		3/16" ANN. GLASS AT VENTS / 3/16" TEMP. GLASS AT FIX. LITE		3/16" TEMP. GLASS AT VENTS AND FIX. LITE	
WIDTH	HEIGHT		EXT.(+)	INT.(–)	EXT.(+)	INT.(–)	EXT.(+)	INT.(–)
74"	26" (3)	8	70.0	111.2	70.0	111.2	70.0	111.2
106-1/4"		12	70.0	80.5	70.0	95.3	70.0	95.3
111"		12	70.0	77.2	70.0	94.0	70.0	94.0
74"	38-3/8" (4)	8	70.0	84.9	70.0	89.5	70.0	89.5
106-1/4"		12	59.8	59.8	70.0	72.3	70.0	72.3
111"		12	56.6	56.6	70.0	70.6	70.0	70.6
74"	50-5/8" (6)	8	64.5	64.5	70.0	75.9	70.0	75.9
106-1/4"		12	48.5	48.5	62.4	62.4	62.4	62.4
111"		12	47.1	47.1	62.4	62.4	62.4	62.4
74"	63" (6)	8	47.9	47.9	68.2	68.2	68.2	68.2
106-1/4"		12	41.0	41.0	56.1	56.1	56.1	56.1
111"		12	39.6	39.6	55.0	55.0	55.0	55.0
72"	24" (3)	8	70.0	118.9	70.0	118.9	70.0	118.9
84"		9	70.0	110.7	70.0	110.7	70.0	110.7
96"		11	70.0	101.1	70.0	105.5	70.0	105.5
108"		12	70.0	91.0	70.0	101.9	70.0	101.9
72"	36" (4)	8	70.0	91.9	70.0	92.3	70.0	92.3
84"		9	70.0	80.9	70.0	87.7	70.0	87.7
96"		11	70.0	70.1	70.0	79.5	70.0	79.5
108"		12	60.4	60.4	70.0	74.3	70.0	74.3
72"	48" (5)	8	70.0	70.0	70.0	79.6	70.0	79.6
84"		9	62.6	62.6	70.0	74.7	70.0	74.7
96"		11	54.7	54.7	66.6	66.6	66.6	66.6
108"		12	50.6	50.6	65.6	65.6	65.6	65.6
72"	60" (6)	8	51.8	51.8	70.0	71.0	70.0	71.0
84"		9	49.2	49.2	64.3	64.3	64.3	64.3
96"		11	46.0	46.0	60.3	60.3	60.3	60.3
108"		12	42.1	42.1	58.1	58.1	58.1	58.1

A = NO. OF ANCHORS PER HEAD & SILL
( ) = NO. OF ANCHORS PER JAMB

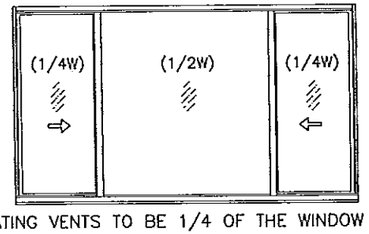

OPERATING VENTS TO BE 1/4 OF THE WINDOW WIDTH

ALL EXTERIOR(+) LOADS SHOWN ON THIS SHEET ARE FOR WINDOWS WITH APPLIED RISER AT FRAME SILL.
FOR STD. SILL (NO RISER) LIMIT EXTERIOR(+) LOADS TO 56.7 PSF SEE DETAIL ON SHEET 3.

Engr: JAVAD AHMAD
CIVIL
FLA. PE # 70592
C.A.N. 3538

APR 26 2012

PRODUCT REVISED
as complying with the Florida Building Code
Acceptance No. 12-0430.03
Expiration Date 12/14/2013
By:
Miami Dade Product Control

AL-FAROOQ CORPORATION
ENGINEERS & PRODUCT DEVELOPMENT
1235 S.W. 87 AVE
MIAMI, FLORIDA 33174
TEL. (305) 264-8100 FAX. (305) 262-6978

COMP-ANL W99-80NA

SERIES HRW-300 ALUM HORIZ. ROLLING WDW. (N.I.)

NEW AGE WINDOWS & DOORS
7196 N.W. 77TH TERRACE
MEDLEY, FL. 33166
TEL. (305) 889-0703 FAX. (305) 889-0710

revisions:

no	date	by	description
E	09.11.08		UPDATED FOR 2007 FBC
F	12.02.08		REV. PER BCCO COMMENTS
G	12.30.08		REV. PER BCCO COMMENTS
H	04.24.12		UPDATED TO 2010 FBC

date: 11-30-99
scale: 1/2"=1'-0"
dr. by: HAMID
chk. by:

drawing no. W99-80

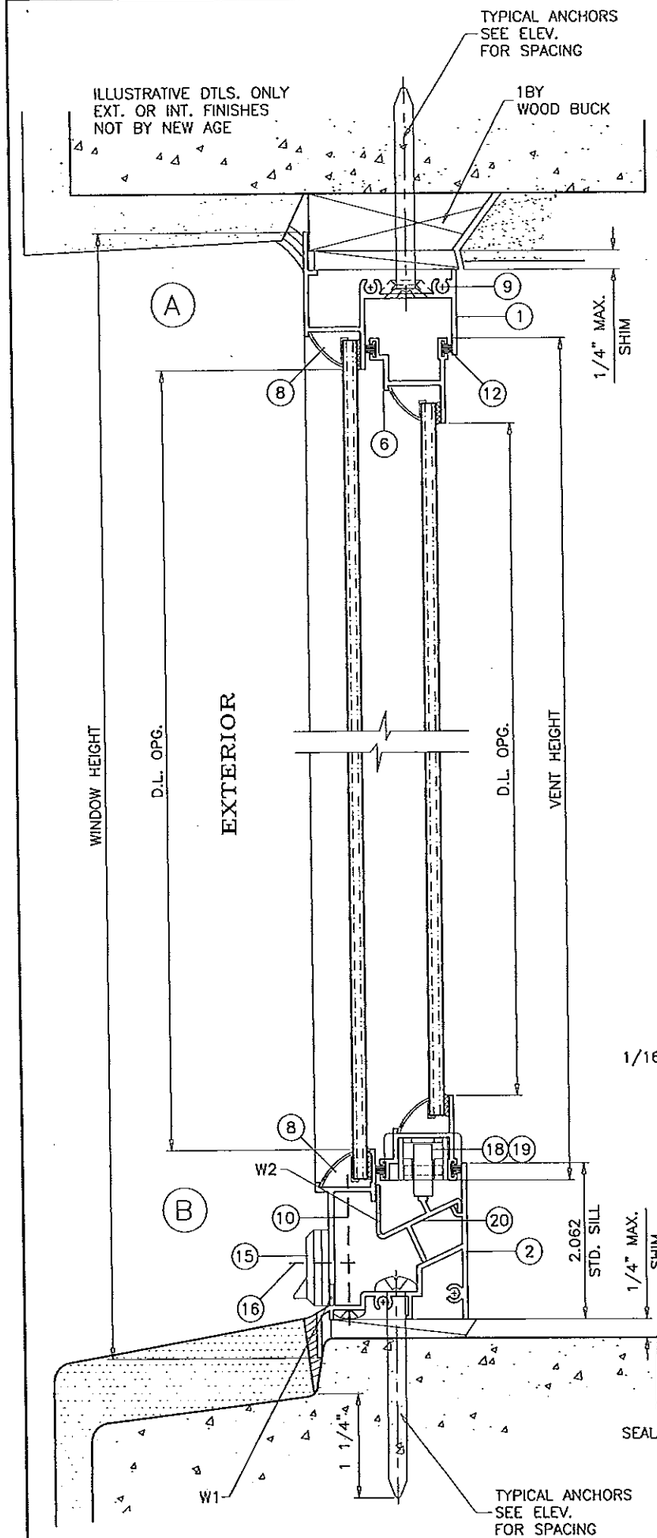

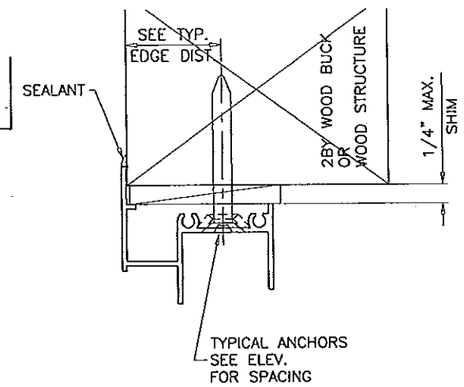

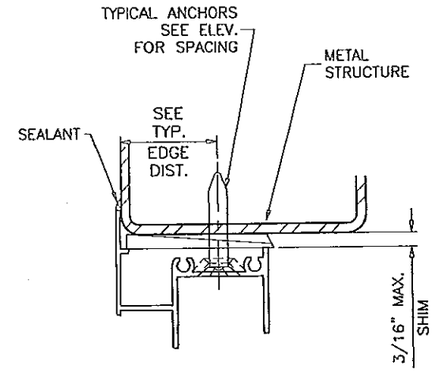

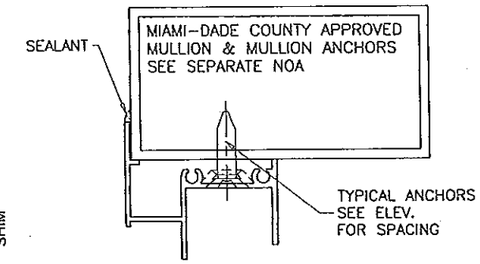

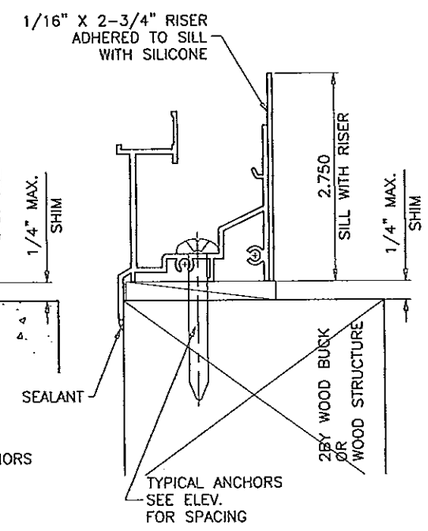

TYPICAL ANCHORS: SEE ELEV. FOR SPACING

TYPE 'A'

1/4" DIA. ULTRACON BY 'ELCO' (Fu=177 KSI, Fy=155 KSI)

INTO 2BY WOOD BUCKS OR WOOD STRUCTURES
1-1/2" MIN. PENETRATION INTO WOOD

THRU 1BY BUCKS INTO CONC. OR MASONRY
1-1/4" MIN. EMBED INTO CONC. OR MASONRY

DIRECTLY INTO CONC. OR MASONRY
1-1/4" MIN. EMBED INTO CONC. OR MASONRY

TYPE 'B' AT FRAME HEAD ONLY

5/16" DIA. ULTRACON BY 'ELCO' (Fu=177 KSI, Fy=155 KSI)

INTO 2BY WOOD BUCKS OR WOOD STRUCTURES
1-1/2" MIN. PENETRATION INTO WOOD

THRU 1BY BUCKS INTO CONC. OR MASONRY
1-1/4" MIN. EMBED INTO CONC. OR MASONRY

DIRECTLY INTO CONC. OR MASONRY
1-1/4" MIN. EMBED INTO CONC. OR MASONRY

1/4" TEKS OR SELF DRILLING SCREWS (GRADE 5 CRS)

INTO METAL STRUCTURES
STEEL : 1/8" THK. MIN. (Fy = 36 KSI MIN.)
ALUMINUM : 1/8" THK. MIN. (6063-T5 MIN.)
(STEEL IN CONTACT WITH ALUMINUM TO BE PLATED OR PAINTED)

#12 SELF DRILLING SCREWS

INTO MIAMI-DADE COUNTY APPROVED MULLIONS (MIN. THK. = 1/8")
(NO SHIM SPACE)

TYPICAL EDGE DISTANCE

INTO CONCRETE AND MASONRY = 2-1/2" MIN.
INTO WOOD STRUCTURE = 1" MIN.
INTO METAL STRUCTURE = 3/4" MIN.

CONCRETE f'c = 3000 PSI MIN.
MASONRY f'm = 1500 PSI MIN.

SEALANTS:

FRAME AND VENT CORNERS AND INSTALLATION SCREWS AT SILL SEALED WITH WHITE/ALUMINUM COLORED GENERAL PURPOSE SILICONE SEALANT BY MACKLANBURG-DUNCAN.

WEEPHOLES:

W1 = 1-15/16" X 1/4" WEEPHOLES AT 5" FROM EACH END OF FRAME
W2 = 1/4" DIA. WEEPHOLES AT 6" FROM ENDS & 20" O.C. MAX.

WOOD BUCKS AND METAL STRUCTURE NOT BY NEW AGE MUST SUSTAIN LOADS IMPOSED BY GLAZING SYSTEM AND TRANSFER THEM TO THE BUILDING STRUCTURE.

Engr: JAVAD AHMAD
CIVIL
FLA. PE # 70592
C.A.N. 3538
APR 26 2012

PRODUCT RENEWED
as complying with the Florida
Building Code
Acceptance No. 13-0521.12
Expiration Date 12/14/2018
By
Miami Dade Product Control

PRODUCT REVISED
as complying with the Florida
Building Code
Acceptance No. 12-0430.03
Expiration Date 12/14/2013
By
Miami Dade Product Control

AL-FAROOQ CORPORATION
ENGINEERS & PRODUCT DEVELOPMENT
1235 S.W. 87 AVE
MIAMI, FLORIDA 33174
TEL. (305) 264-8100 FAX. (305) 262-6978
COMP-ANL\W99-80NA

SERIES HRW-300 ALUM HORIZ. ROLLING WDW. (N.I.)

NEW AGE WINDOWS & DOORS
7196 N.W. 77TH TERRACE
MEDLEY, FL. 33166
TEL. (305) 889-0703 FAX. (305) 889-0710

revisions:

no	date	by	description
E	09.11.08		UPDATED FOR 2007 FBC
F	12.02.08		NO CHANGE THIS SHEET
G	12.30.08		REV. PER BCCO COMMENTS
H	04.24.12		UPDATED TO 2010 FBC

date: 11-30-99
scale: 1/2" = 1"
dr. by: HAMID
chk. by:

drawing no.
W99-80

sheet 3 of 6

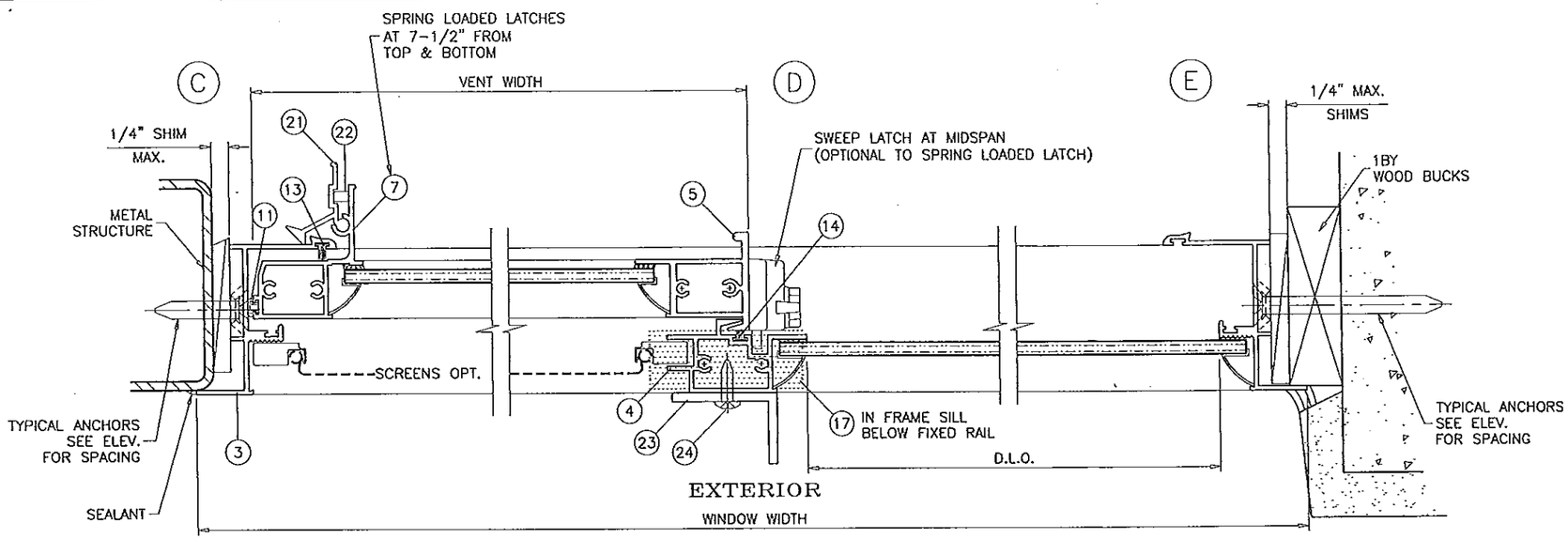

XO LAYOUT
OX OPPOSITE

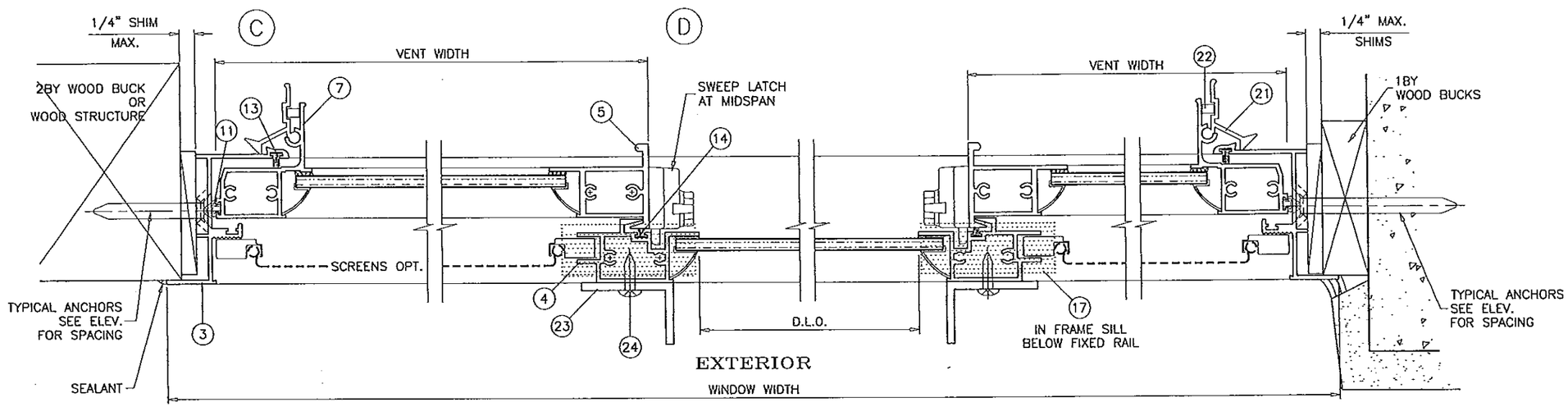

XOX LAYOUT

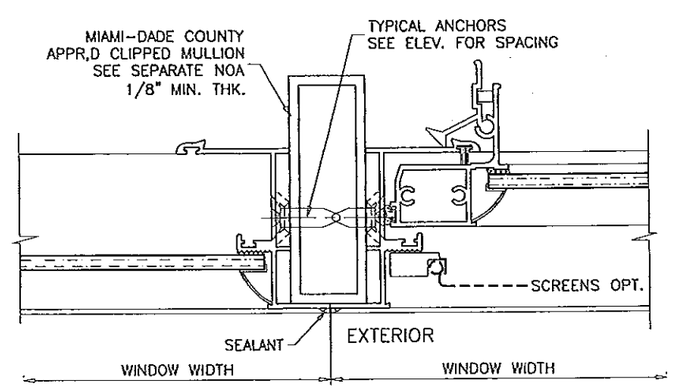

Engr: JAVAD AHMAD
CIVIL
FLA. PE # 70592
C.A.N. 3538
APR 26 2012

PRODUCT RENEWED
as complying with the Florida Building Code
Acceptance No 13-0521.12
Expiration Date 12/14/2018
By
Miami Dade Product Control

PRODUCT REVISED
as complying with the Florida Building Code
Acceptance No 12-0430.03
Expiration Date 12/14/2013
By
Miami Dade Product Control

AL-FAROOQ CORPORATION
ENGINEERS & PRODUCT DEVELOPMENT
1235 S.W. 87 AVE
MIAMI, FLORIDA 33174
TEL. (305) 264-8100 FAX. (305) 262-6978
COMP-ANL\W99-80NA

SERIES HRW-300 ALUM HORIZ. ROLLING WDW. (N.I.)

NEW AGE WINDOWS & DOORS
7196 N.W. 77TH TERRACE
MEDLEY, FL. 33166
TEL. (305) 889-0703 FAX. (305) 889-0710

revisions:

no	date	by	description
E	09.11.08		UPDATED FOR 2007 FBC
F	12.02.08		NO CHANGE THIS SHEET
G	12.30.08		REV. PER BCCO COMMENTS
H	04.24.12		NO CHANGE THIS SHEET

date: 11-30-99
scale: 1/2" = 1"
dr. by: HAMID
chk. by:

drawing no.
W99-80

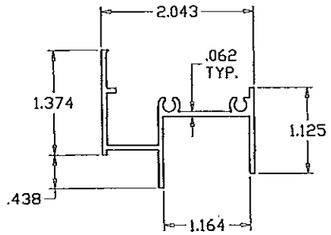

FRAME HEAD

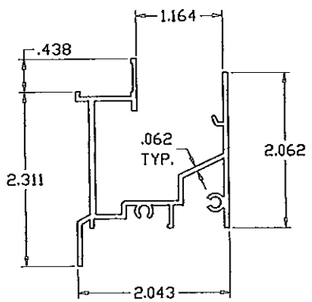

FRAME SILL

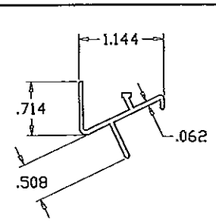

SILL TRACK

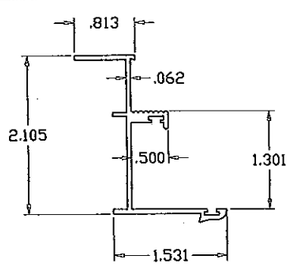

FRAME JAMB

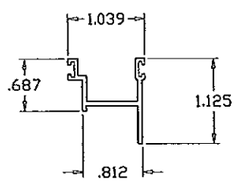

VENT TOP/BOTTOM RAIL

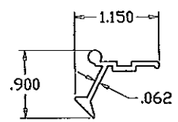

VENT LATCH

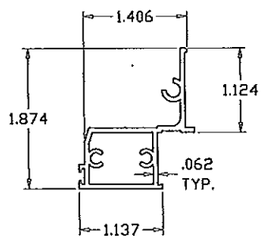

JAMB STILE

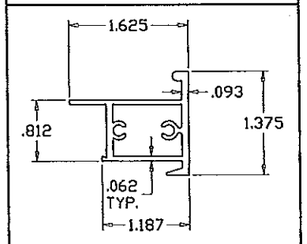

MEETING RAIL

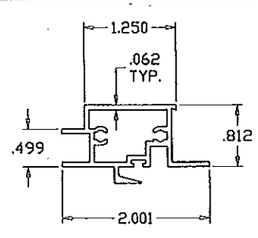

FIXED MTG. RAIL

ITEM	PART #	QUANTITY	DESCRIPTION	MATERIAL	MANF./SUPPLIER/REMARKS
1	4386	1	FRAME HEAD	6063-T6	-
2	NAS-101	1	FRAME SILL	6063-T6	-
3	4333	2	FRAME JAMB	6063-T6	-
4	4331	1/ VENT	FIXED RAIL	6063-T6	-
5	BA-4638	1/ VENT	VENT MEETING RAIL	6063-T5	-
6	BA-4425	2/ VENT	TOP AND BOTTOM RAIL	6063-T5	-
7	43907	1/ VENT	JAMB STILE	6063-T6	-
8	069	AS REQD.	GLAZING BEAD	ALUMINUM	ROLL FORMED
9	#10 X 1"	AS REQD.	FRAME ASSEMBLY SCREWS	-	P.H. PHILLIPS SMS
10	#8 X 2-1/2"	2	FIX. RAIL SILL SCREWS (SILL END)	-	P.H. PHILLIPS SMS
11	-	AS REQD.	VENT JAMB RAIL W'STRIPPING	VINYL	1/4" DIA. BULB
12	W-3331	AS REQD.	WEATHERSTRIPPING	-	PILE WITH PLASTIC FIN
13	-	AS REQD.	WEATHERSTRIPPING	-	PILE WITH PLASTIC FIN
14	-	AS REQD.	FIN SEAL WEATHERSTRIPPING	-	-
15	NAW-45	1/ WEEP	BAFFLE	NYLON	-
16	#8 X 3/4"	2/ CORNER	VENT ASSEMBLY SCREWS	-	P.H. PHILLIPS SMS
17	-	-	ADHESIVE BACK CLOSED CELL FOAM	-	1/2" X 5/8" X 2-3/16" LONG
18	NAW-46	2/ VENT	VENT ROLLER HOUSING & GUIDE	NYLON	AT EACH END
19	1801	2/ VENT	VENT ROLLER/WHEEL	ST. STEEL	-
20	4332	1	SILL TRACK INSERT	6063-T5	-
21	44300	2/ VENT	VENT LATCH	6063-T6	AT 7-1/2" FROM ENDS
22	SP-27A	1/ LATCH	VENT LATCH SPRING	ST. STEEL	-
23	-	AS REQD.	FIX. RAIL REINFORCING ANGLE, FULL LENGTH	ALUMINUM	1" X 1-1/2" X 1/8"
24	#10 X 3/4"	AS REQD.	REINF. ANGLE SCREWS AT 10" O.C.	ST. STEEL	TRUSS HEAD SELF DRILLING

Engr: JAVAD AHMAD
CIVIL
FLA. PE # 70592
C.A.N. 3538
APR 26 2012

PRODUCT RENEWED
as complying with the Florida
Building Code
Acceptance No 13-0521.12
Expiration Date 12/14/2013
By
Miami Dade Product Control

PRODUCT REVISED
as complying with the Florida
Building Code
Acceptance No 12-0430.03
Expiration Date 12/14/2013
By
Miami Dade Product Control

AL-FAROOQ CORPORATION
ENGINEERS & PRODUCT DEVELOPMENT
1235 S.W. 87 AVE
MIAMI, FLORIDA 33174
TEL. (305) 264-8100 FAX. (305) 262-6978
COMP-ANL\W99-80NA

SERIES HRW-300 ALUM HORIZ. ROLLING WDW. (N.I.)

NEW AGE WINDOWS & DOORS
7196 N.W. 77TH TERRACE
MEDLEY, FL. 33166
TEL. (305) 889-0703 FAX. (305) 889-0710

revisions:

no	date	by	description
E	09.11.08		UPDATED FOR 2007 FBC
F	12.02.08		NO CHANGE THIS SHEET
G	12.30.08		NO CHANGE THIS SHEET
H	04.24.12		UPDATED TO 2010 FBC

date: 11-30-99
scale: 1/2" = 1"
dr. by: HAMID
chk. by:

drawing no.
W99-80

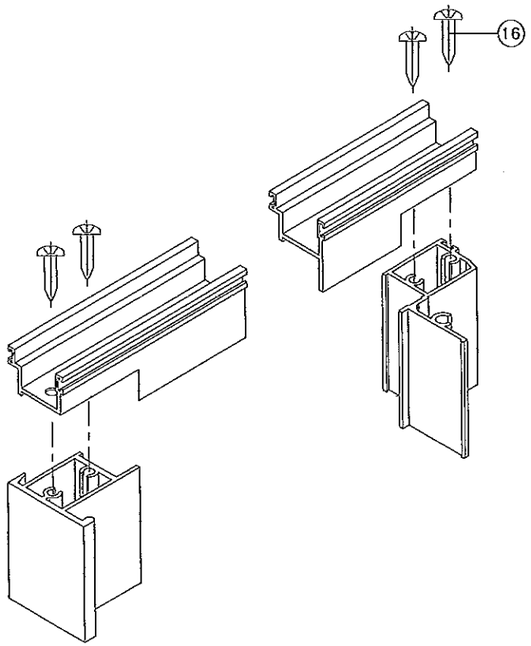

VENT TOP/BOTTOM CORNERS

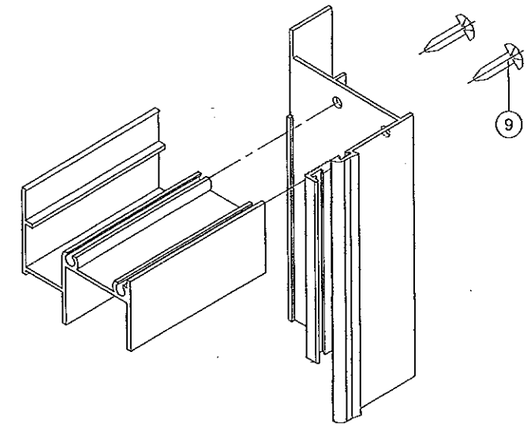

FRAME TOP CORNER

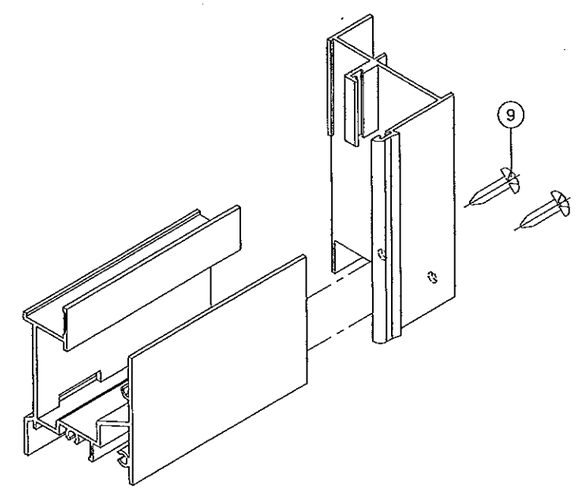

FRAME BOTTOM CORNER

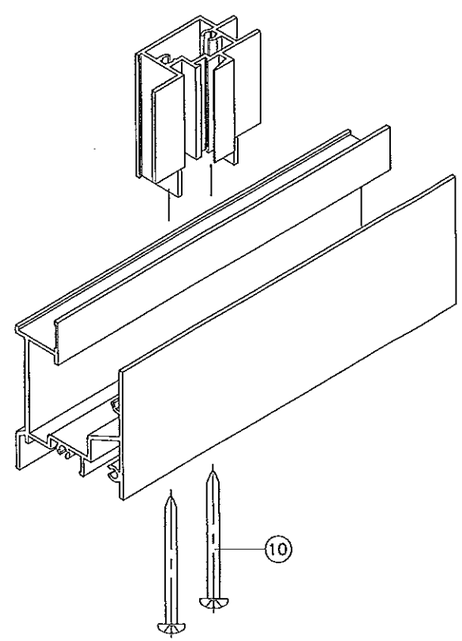

FIXED MTG. RAIL CORNER

RECEIVED

Engr: JAVAD AHMAD
CIVIL
FLA. PE # 70592
C.A.N. 3538

APR 26 2012

PRODUCT RENEWED
as complying with the Florida Building Code
Acceptance No 13-0521.12
Expiration Date 12/14/2018
By
Miami Dade Product Control

PRODUCT REVISED
as complying with the Florida Building Code
Acceptance No 12-0430.03
Expiration Date 12/14/2013
By
Miami Dade Product Control

AL-FAROOQ CORPORATION
ENGINEERS & PRODUCT DEVELOPMENT
1235 S.W. 87 AVE
MIAMI, FLORIDA 33174
TEL. (305) 264-8100 FAX. (305) 262-6978

COMP-ANL\W99-80NA

SERIES HRW-300 ALUM HORIZ. ROLLING WDW. (N.I.)

NEW AGE WINDOWS & DOORS
7196 N.W. 77TH TERRACE
MEDLEY, FL. 33166
TEL. (305) 889-0703 FAX. (305) 889-0710

revisions:

no	date	by	description
E	09.11.08		UPDATED FOR 2007 FBC
F	12.02.08		NO CHANGE THIS SHEET
G	12.30.08		NO CHANGE THIS SHEET
H	04.24.12		NO CHANGE THIS SHEET

date: 11-30-99
scale: 1/2" = 1"
dr. by: HAMID
chk. by:

drawing no.
W99-80