MIAMI-DADE COUNTY
DEPARTMENT OF REGULATORY AND ECONOMIC RESOURCES (RER)
BOARD AND CODE ADMINISTRATION DIVISION

MIAMI-DADE COUNTY
PRODUCT CONTROL SECTION
11805 SW 26 Street, Room 208
T (786) 315-2590 F (786) 315-2599
www.miamidade.gov/economy

NOTICE OF ACCEPTANCE (NOA)

NABCO Entrance Inc.
S82 W18717 Gemini Drive,
Muskego, Wisconsin 53150

SCOPE:

This NOA is being issued under the applicable rules and regulations governing the use of construction materials. The documentation submitted has been reviewed and accepted by Miami-Dade County RER -Product Control Section to be used in Miami Dade County and other areas where allowed by the Authority Having Jurisdiction (AHJ).

This NOA shall not be valid after the expiration date stated below. The Miami-Dade County Product Control Section (In Miami Dade County) and/or the AHJ (in areas other than Miami Dade County) reserve the right to have this product or material tested for quality assurance purposes. If this product or material fails to perform in the accepted manner, the manufacturer will incur the expense of such testing and the AHJ may immediately revoke, modify, or suspend the use of such product or material within their jurisdiction. RER reserves the right to revoke this acceptance, if it is determined by Miami-Dade County Product Control Section that this product or material fails to meet the requirements of the applicable building code.

This product is approved as described herein, and has been designed to comply with the Florida Building Code, including the High Velocity Hurricane Zone.

DESCRIPTION: Series "System GT 1175 models FBO & FS" Aluminum Automatic Sliding Glass Doors : So-Sx-Sx-So, So-Sx w/ Full Emergency Breakout and O-Sx-Sx-O, O-Sx w/Partial Emergency Breakout-LMI

APPROVAL DOCUMENT: Drawing No. **12-090**, titled "System GT1175 Large & Small Missile", sheets 1, 2, 2.1 thru 16, 16.1thru 21of 21, prepared by ENGCO Inc., dated 10-10-13 and last revised on DEC 06, 2013, signed and sealed by Pedro M. De Figueirdo, P.E., bearing the Miami-Dade County Product Control Approval stamp with the Notice of Acceptance number and approval date by the Miami-Dade County Product Control Section.

MISSILE IMPACT RATING: Large and Small Missile Impact

LIMITATIONS:

1. See Design Pressure Table **1** (FBO) and Table **2** (FS) in sheet **2.1**. See Table **3** for Sill (interlock/astragal cluster) anchor capacity, Table **4** for Header (interlock/astragal cluster) anchor capacity and jamb anchors per model types in sheet **13**. Lower Design Pressure shall control from the tables for the entire assembly.
2. Locking option 3 (sheet 20) : The 2-point **G-86** CVR panic devices for model FBO in sheets **2** to be used w/ Horizontal muntin bars (detail 10/5) and the DLO height to be adjusted per muntin bar location. All stiles to be reinforced with Aluminum part # 14-13950.
3. Not approved where water infiltration is required, unless protected with overhang, complying with FBC requirements.
4. See glazing details in sheet **15**.Fixed glass more than 36" wide must be supported with approved setting blocks per FBC requirements.
5. Electrical devices, functions and installation is not part of this approval and to be reviewed and approved by Authority Having Jurisdiction (AHJ)
6. Private labelling is not part of this approval.

LABELING: Each unit shall bear a permanent label with the manufacturer's name or logo, city, state and series and following statement: "Miami-Dade County Product Control Approved", noted herein.

RENEWAL of this NOA shall be considered after a renewal application has been filed and there has been no change in the applicable building code negatively affecting the performance of this product.

TERMINATION of this NOA will occur after the expiration date or if there has been a revision or change in the materials, use, and/or manufacture of the product or process. Misuse of this NOA as an endorsement of any product, for sales, advertising or any other purposes shall automatically terminate this NOA. Failure to comply with any section of this NOA shall be cause for termination and removal of NOA.

MIAMI-DADE COUNTY APPROVED

12/17/13

MIAMI-DADE COUNTY
DEPARTMENT OF REGULATORY AND ECONOMIC RESOURCES (RER)
BOARD AND CODE ADMINISTRATION DIVISION

NOTICE OF ACCEPTANCE (NOA)

MIAMI-DADE COUNTY
PRODUCT CONTROL SECTION
11805 SW 26 Street, Room 208
T (786) 315-2590 F (786) 315-2599
www.miamidade.gov/economy

NABCO Entrance Inc.
S82 W18717 Gemini Drive,
Muskego, Wisconsin 53150

ADVERTISEMENT: The NOA number preceded by the words Miami-Dade County, Florida, and followed by the expiration date may be displayed in advertising literature. If any portion of the NOA is displayed, then it shall be done in its entirety.

INSPECTION: A copy of this entire NOA shall be provided to the user by the manufacturer or its distributors and shall be available for inspection at the job site at the request of the Building Official.

This NOA consists of the pages 1& 2 and evidence page E-1, as well as approval document mentioned above.

The submitted documentation was reviewed by **Ishaq I. Chanda, P.E.**

MIAMI-DADE COUNTY APPROVED

12/17/13

NOTICE OF ACCEPTANCE: EVIDENCE SUBMITTED

A. DRAWINGS

1. Manufacturer's die drawings and sections.
2. Drawing No. **12-090**, titled "System GT1175 Large & Small Missile", sheets 1, 2, 2.1 thru 16, 16.1thru 21of 21, prepared by ENGCO Inc., dated 10-10-13 and last revised on DEC 06, 2013, signed and sealed by Pedro M. De Figueirdo, P.E.

B. TESTS

1. Test reports on: 1) Air Infiltration Test, per FBC, TAS 202-94
   2) Uniform Static Air Pressure Test, Loading per FBC TAS 202-94
   3) Water Resistance Test, per FBC, TAS 202-94 (Not conducted)
   4) Large Missile Impact Test per FBC, TAS 201-94
   5) Cyclic Wind Pressure Loading per FBC, TAS 203-94
   6) Forced Entry Test, per FBC 2411 3.2.1, TAS 202-94

Along with installation diagram of aluminum automatic entrance doors O-Sx-Sx-O and So-Sx-Sx-So, prepared by Architectural Testing. Test Report No. **C-2942.01-602-18** (Units #1, 2, 3 & 5), dated 10/17/12, signed and sealed by Shawn G. Collins, P. E.
Note: This test report has been revised on SEP 12, 2013 by an addendum letter issued by Architectural Testing, signed and sealed by Shawn G. Collins, P. E.

C. CALCULATIONS

1. Anchor verification calculations and structural analysis, complying with FBC-2010, prepared by ENGCO Inc., dated May 06, 2013 and last revised on OCT 17, 2013, signed and sealed by Pedro M. De Figueirdo, P.E.
2. Glazing complies w/ ASTME-1300-02 & -04.

D. QUALITY ASSURANCE

1. Miami Dade Department of Regulatory and Economic Resources (RER).

E. MATERIAL CERTIFICATIONS

1. Notice of Acceptance No. **11-0624.02** issued to E.I. DuPont DE Nemours & Co., Inc. for their "**Sentryglas interlayer ®**", expiring on 11/14/17.
2. Technical strength data of Trelleborg EPDM (p/t# 9278-0400) per ASTM C864 and Reed Rubber Product Thermo Plastic Elastomer (p/t #W514).

F. STATEMENTS

1. Statement letter of conformance to FBC 2010 and "No financial interest", prepared by prepared by ENGCO Inc., dated May 06, 2013, signed and sealed by Pedro M. De Figueirdo, P.E.
2. Lab compliance as part of the above referenced test report.
3. Corporate good standing records dated 12/02/13, issued by Wisconsin Department of Financial Institutions.

G. OTHER

1. Test proposals # **12-1362** dated 08/22/12 approved by RER.
2. Manufacture supplied Adam Rites deadbolt/hook, bolts mechanism and G-86 panic exit device brochures and technical data of EPDM and Thermo Plastic Elastomer.

Ishaq I. Chanda

Ishaq I. Chanda, P.E.
Product Control Examiner
NOA No. 13-0521.14
Expiration Date: December 26, 2018
Approval Date: December 26, 2013

SYSTEM GT 1175

MODELS 1175 FBO AND 1175 FS
AUTOMATIC ALUMINUM SLIDING GLASS DOOR W/ ALUMINUM REINFORCEMENTS
LARGE AND SMALL IMPACT RESISTANT

GENERAL NOTES: (FLORIDA BUILDING CODE 2010 - HVHZ)

1- CODE: THIS PRODUCT HAS BEEN TESTED AND DESIGNED IN ACCORDANCE WITH THE FLORIDA BUILDING CODE 2010 INCLUDING THE HIGH VELOCITY HURRICANE ZONE (HVHZ).

2- DEFINITION: THIS PRODUCT IS AN AUTOMATIC SLIDING GLASS DOOR DESIGNED, CONSTRUCTED AND TESTED TO PROVIDE PROTECTION FROM HURRICANE FORCE WINDS WITHIN THE ALLOWABLE DESIGNED PRESSURES AND LIMITATIONS STATED IN THIS APPROVAL. PRODUCT IS RATED FOR LARGE AND SMALL MISSILE.

3- LABELING: PRODUCT MUST BE LABELED IN ACCORDANCE WITH THE FBC 2010, CHAPTER 17, SECTION 1715.5.

"NABCO ENTRANCES - MUSKEGO - WISCONSIN
SYSTEM GT 1175 SERIES AUTOMATIC SLIDING GLASS DOOR
MIAMI-DADE PRODUCT CONTROL APPROVED"

4- PROJECT DESIGN PRESSURES: THE PROJECT DESIGNED PRESSURES MUST BE CALCULATED BASED ON THE ASCE 7-10, BY A PROFESSIONAL ARCHITECT OR ENGINEER. THE PROJECT DESIGN PRESSURE, AS DETERMINED BY ASCE 7-10, ARE PERMITTED TO BE MULTIPLIED BY 0.6 AND THEY MUST NOT EXCEED THE ALLOWABLE PRODUCT PRESSURE SPECIFIED HERE IN.

5- MATERIAL: ALL ALUMINUM PARTS TO BE 6063-T5 ALLOY OR AS NOTED AND GLAZING TO BE LAMINATED IMPACT GLASS AS SPECIFIED ON THIS APPROVAL.

6- FASTENERS: ASSEMBLY SCREWS AND ANCHORS SHALL BE AS SPECIFIED IN THE CURRENT SET OF DRAWINGS. INSTALLATION AND LOADS AS PER THIS APPROVAL. ANCHOR SPACING AND LOADS MUST NOT EXCEED THE MAXIMUM LIMITS SPECIFIED BY THIS APPROVAL.

7- USE: IT SHALL BE THE RESPONSIBILITY OF THE CONTRACTOR, ARCHITECT OR ENGINEER OF RECORD TO VERIFY THE FOLLOWING:
7.1- THE STABILITY OF THE STRUCTURE WHERE THE PRODUCT IS TO BE ATTACHED INSURING PROPER ANCHORAGE.
7.2- THE SITE SPECIFIC PROJECT CRITERIA, SUCH AS BUT NOT LIMITED TO, LOCAL CODE REQUIREMENTS, DESIGNED PRESSURES ETC.
7.3- THAT THIS APPROVAL IS ADEQUATE FOR A SPECIFIC PROJECT.

8- WOOD BUCKS (1X AND 2X) BY OTHERS, MUST BE PROPERLY ANCHORED TO TRANSFER LOADS TO THE STRUCTURE.

9- DISSIMILAR MATERIALS: ALUMINUM CONTACTING MATERIALS NOT CONSIDERED COMPATIBLE SHALL BE PROTECTED AS PER THE REQUIREMENTS OF THE 2010 FLORIDA BUILDING CODE, SECTION 2003.8.4.

INSTRUCTIONS TO USE THIS DRAWING TO VERIFY DOOR ADEQUACY PRESSURE

STEP 1 - SHEET 1 GENERAL NOTE 4: DETERMINE PROJECT DESIGNED PRESSURE (DP) AS INDICATED.

STEP 2 - SHEET 2.1: SELECT ALLOWABLE PRESSURE USING TABLES 1 OR 2 BASED ON DOOR DIMENSIONS AND MODEL TYPE.

STEP 3 - SHEET 13: SELECT FRAME ANCHORING ALLOWABLE DESIGN PRESSURE CAPACITY FROM TABLES 3 (SILL) AND 4 (HEADER). SELECT JAMB ANCHORS PER MODEL TYPE

STEP 4 - THE LOWEST ALLOWABLE DESIGNED PRESSURE FROM STEP 2 AND 3 SHALL APPLY TO THE ENTIRE SYSTEM AND MUST BE GREATER OR EQUAL THAN THE PROJECT DESIGN PRESSURE (DP) FROM STEP 1

TABLE OF CONTENTS:

SHEET	CONTENTS
1 OF 21	GENERAL NOTES, TABLE OF CONTENTS
2 OF 21	ELEVATIONS FOR GT1175 FBO
2.1 OF 21	DESIGN RATING FOR GT1175 FBO AND GT1175 FS
3 OF 21	ELEVATIONS FOR GT1175 FS
4 OF 21	GT1175 FBO HEADER SECTION DETAILS
5 OF 21	GT1175 FBO SILL SECTION DETAILS
6 OF 21	GT1175 FBO INTERLOCK & JAMB SECTION DETAILS
7 OF 21	GT1175 FS HEADER SECTION DETAILS
8 OF 21	GT1175 FS SILL SECTION DETAILS
9 OF 21	GT1175 FS INTERLOCK & JAMB SECTION DETAILS
10 OF 21	JAMB ANCHORAGE DETAILS
11 OF 21	HEADER ANCHORAGE DETAILS
12 OF 21	HEADER & SILL ANCHORAGE DETAILS
13 OF 21	ANCHORAGE TABLES 3 & 4
14 OF 21	DOOR COMPONENTS
15 OF 21	DOOR COMPONENTS, GLAZING DETAILS, LIST OF MATERIALS
16 OF 21	DOOR HARDWARE DETAILS
16.1 OF 21	DOOR HARDWARE DETAILS
17 OF 21	JAMB ASSEMBLY TO HEADER HOUSING
18 OF 21	LOCK HARDWARE OPTION 1
19 OF 21	LOCK HARDWARE OPTION 2
20 OF 21	LOCK HARDWARE OPTION 3
21 OF 21	BILL OF MATERIALS

DOOR ALLOWABLE DESIGNED PRESSURES

MODEL GT1175 FBO - SHEET 2.1 OF 21 TABLE 1
MODEL GT1175 FS - SHEET 2.1 OF 21 TABLE 2
FRAME ANCHORAGE - SHEET 13 OF 21 TABLES 3 & 4
REFER TO EACH MODEL TYPE FOR ALLOWABLE DESIGNED PRESSURES AND SIZES

LEGEND:
FBO: FULL BREAKAWAY OPEN
FS: FIXED SIDELITE
FH: DOOR FINISHED HEIGHT
FW: DOOR FINISHED WIDTH
DM: DOOR MODULE
DOW: DOOR OPENING WIDTH
DOH: DOOR OPENING HEIGHT
DLO: DAYLIGHT OPENING
CVR: CONCEALED VERTICAL ROD
E.D.: EDGE DISTANCE

MANUFACTURER:
NABCO
NABCO ENTRANCES INC
S82 W18717 GEMINI DRIVE
MUSKEGO, WISCONSIN 53150
PHONE: (877) 622-2694
FAX: (262) 679-2505

PRODUCT:
SYSTEM GT1175
LARGE & SMALL MISSILE
IMPACT RATED
AUTOMATIC SLIDING GLASS DOOR

ENGINEERING:
ENGCO INC. CA 8116
5595 ORANGE DR. 201
DAVIE, FL. 33314
Tel.: (954) 585-0304
WWW.ENGCOINC.COM

PEDRO M. DE FIGUEIREDO
LICENSE
No. 52609
STATE OF FLORIDA
PROFESSIONAL ENGINEER

DEC 06 2013

Engineer Seal
Pedro De Figueiredo - PE 52609

MIAMI-DADE BCCO:

Approved as complying with the Florida Building Code
Date DEC 26 2013
NOA# 13-0321.14
Miami Dade Product Control
By Ishaq Khan

DATE: 10/10/2013
SCALE: NA
DESIGN BY: PPMF

SHEET	DRAWING #:
1 OF 21	12-090

SYSTEM GT 1175 SERIES - MODEL 1175 FBO

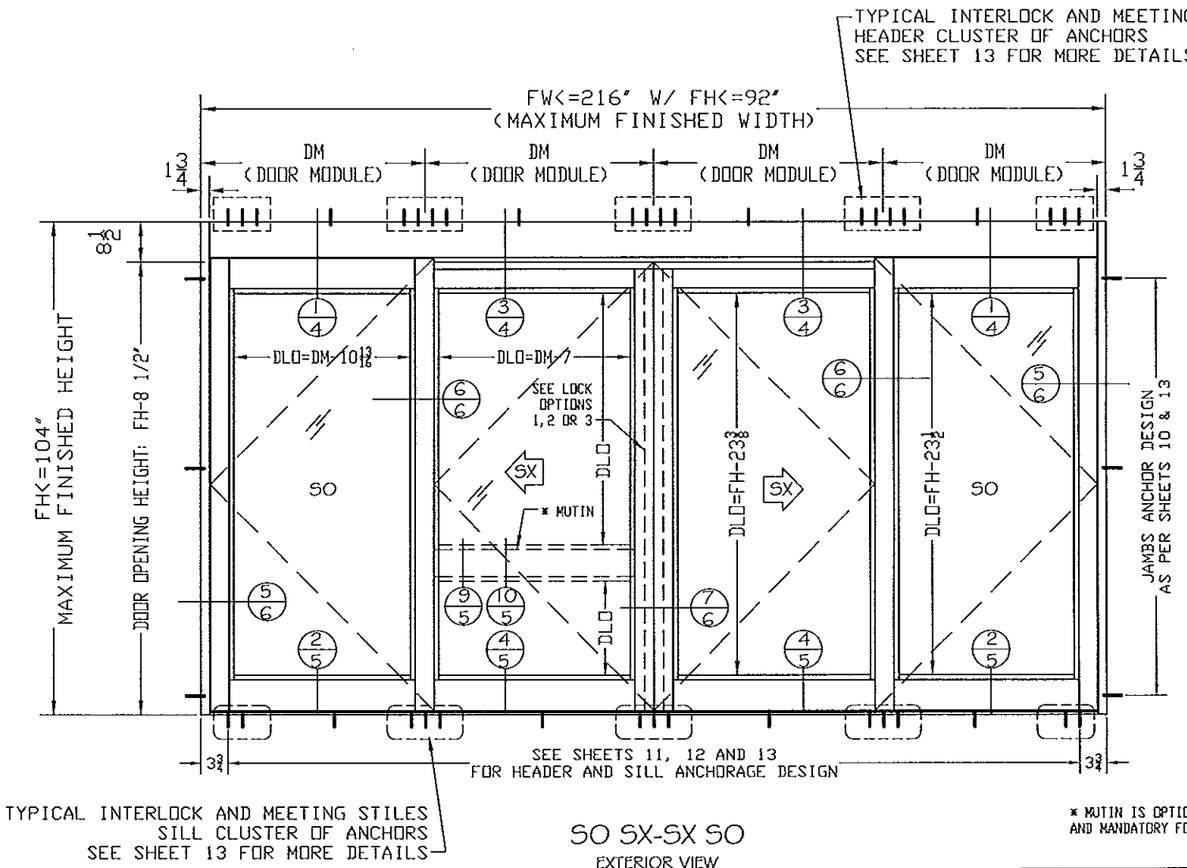

SO SX-SX SO
EXTERIOR VIEW

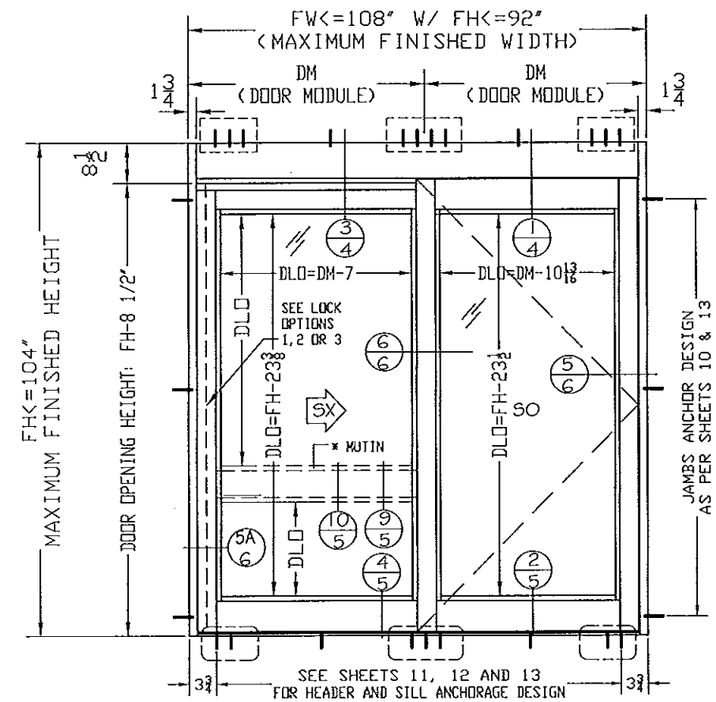

SX SO
EXTERIOR VIEW

* MUTIN IS OPTIONAL FOR HARDWARE 1 AND 2
AND MANDATORY FOR HARDWARE 3 (PANIC)

SEE TABLE 1 ON SHEET 2.1 OF 21
FOR DESIGN PRESSURES

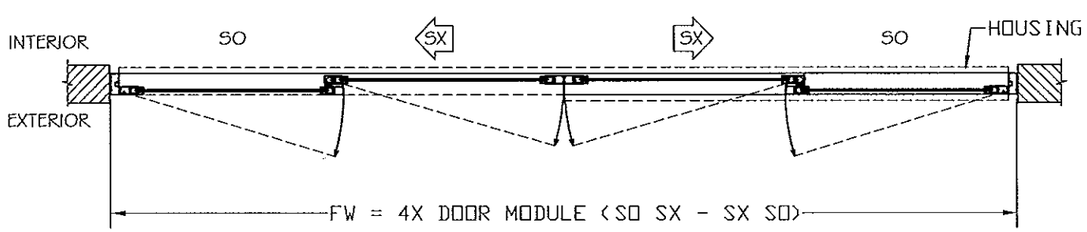

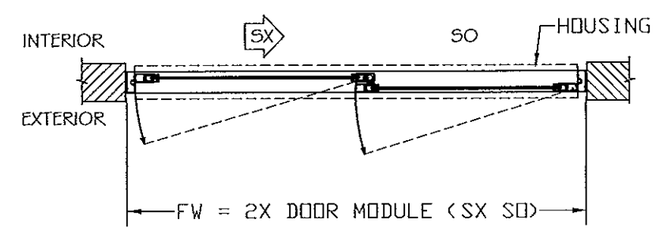

DOOR MODULE:
DM= FW/ 4 FOR (SO SX-SX SO)
DM= FW/2 FOR (SO SX)

(4 PANELS) DOOR OPENING WIDTH: DOW= 2X DM-12
(2 PANELS) DOOR OPENING WIDTH: DOW= 1X DM- 6
DOOR OPENING HEIGHT: DOH= FH- 8 1/2"

MANUFACTURER:

NABCO

NABCO ENTRANCES INC
S82 W18717 GEMINI DRIVE
MUSKEGO, WISCONSIN 53150
PHONE: (877) 622-2694
FAX: (262) 679-2505

PRODUCT:

SYSTEM GT1175
LARGE & SMALL MISSILE
IMPACT RATED
AUTOMATIC SLIDING GLASS DOOR

ENGINEERING:

ENGCO INC. CA 8116
5595 ORANGE DR. 201
DAVIE, FL. 33314
Tel.: (954) 585-0304
WWW.ENGCOINC.COM

PEDRO M. DE FIGUEIREDO
LICENSE
No. 52609
STATE OF FLORIDA
PROFESSIONAL ENGINEER

DEC 06 2013

Engineer Seal
Pedro De Figueiredo - PE 52609

MIAMI-DADE BCCO:

Approved as complying with the Florida Building Code
Date 12/12/13
NOA# 13-0521.12
Miami Dade Product Control
By

DATE: 10/10/2013
SCALE: NA
DESIGN BY: PPMF

SHEET	DRAWING #:
2 OF 21	12-090

SYSTEM GT 1175 SERIES - MODEL 1175 FBO

TABLE 1 - MODEL 1175-FBO
ALLOWABLE DESIGNED PRESSURES (PSF)

FH (IN)	DM (IN)	PRESSURE (PSF) +/-
92	36	105
	39	97
	42	90
	45	84
	48	79
	54	70
96	36	101
	39	93
	42	87
	45	81
	48	76
	52	70
100	36	97
	39	90
	42	83
	45	78
	48	73
	49	70
104	36	93
	39	86
	42	80
	45	75
	48	70

MODEL 1175-FBO CONFIGURATIONS NOTES:

1- SLIDING GLASS DOOR CAN BE CONFIGURED IN DIFFERENT WAYS BY USING THE APPROVED SECTIONS FOR EACH MODEL.
2- CONFIGURATIONS CAN BE MADE WITH 2 OR 4 MODULES AS LONG AS IT DOES NOT EXCEED THE MAXIMUM MODULE SIZES AND PRESSURES LISTED IN TABLE 1.
3- USE SECTIONS 1/4 AND 3/4 FOR HEADER DETAILS
4- USE SECTIONS 2/5 AND 4/5 FOR SILL DETAILS
5- USE SECTIONS 5/6 OR 5A/6 FOR JAMB DETAILS
6- USE SECTION 6/6 FOR INTERLOCK DETAIL
7- USE SECTION 7/6 FOR MEETING STILES DETAIL
8- OPTIONAL MID RAIL SECTION 9/5 (ANY PANEL)

EXAMPLE FOR ALTERNATE CONFIGURATIONS

2 PANELS - SO SX - FW<= 108" (FH<= 92")
2 PANELS - SO SX - FW<= 96" (FH<= 104")
4 PANELS - SO SX-SX SO - FW<= 216" (FH<=92")
4 PANELS - SO SX-SX SO - FW<= 192" (FH<=104")

DOOR ARE NOT RATED FOR WATER INFILTRATION,
INSTALLATION TO MEET ILLUSTRATION "Z" BELOW.

SYSTEM GT 1175 SERIES - MODEL 1175 FS

TABLE 2 - MODEL 1175-FS
ALLOWABLE DESIGNED PRESSURES (PSF)

FH (IN)	DM (IN)	PRESSURE (PSF) +/-
92	36	105
	39	97
	42	90
	45	84
	48	79
	54	70
96	36	101
	39	93
	42	87
	45	81
	48	76
	52	70
100	36	97
	39	90
	42	83
	45	78
	48	73
	49	70
104	36	93
	39	86
	42	80
	45	75
	48	70

MODEL 1175-FS CONFIGURATIONS NOTES:

1- SLIDING GLASS DOOR CAN BE CONFIGURED IN DIFFERENT WAYS BY USING THE APPROVED SECTIONS FOR EACH MODEL.
2- CONFIGURATIONS CAN BE MADE WITH 2 OR 4 MODULES AS LONG AS IT DOES NOT EXCEED THE MAXIMUM MODULE SIZES AND PRESSURES LISTED IN TABLE 2.
3- USE SECTIONS 10/7 AND 30/7 FOR HEADER DETAILS
4- USE SECTIONS 20/8 AND 40/8 FOR SILL DETAILS
5- USE SECTIONS 50/9 AND 50A/9 FOR JAMB DETAILS
6- USE SECTION 60/9 FOR INTERLOCK DETAIL
7- USE SECTION 70/9 FOR MEETING STILES DETAIL
8- OPTIONAL MID RAIL SECTION 9/8 (ANY PANEL)

EXAMPLE FOR ALTERNATE CONFIGURATIONS

2 PANELS - O SX - FW<= 108" (FH<= 92")
2 PANELS - O SX - FW<= 96" (FH<= 104")
4 PANELS - O SX-SX O - FW<= 216" (FH<=92")
4 PANELS - O SX-SX O - FW<= 192" (FH<=104")

DOOR ARE NOT RATED FOR WATER INFILTRATION,
INSTALLATION TO MEET ILLUSTRATION "Z" BELOW.

ILLUSTRATION "Z"

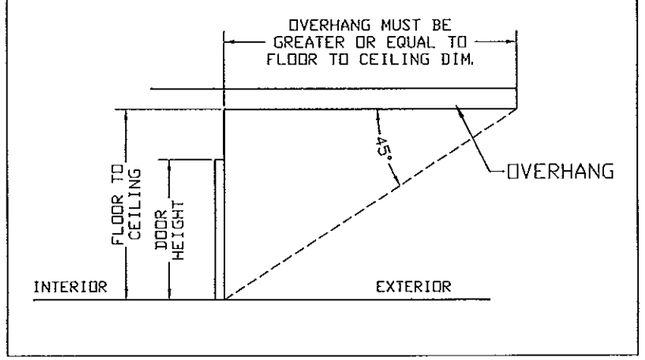

MANUFACTURER:

NABCO

NABCO ENTRANCES INC
S82 W18717 GEMINI DRIVE
MUSKEGO, WISCONSIN 53150
PHONE: (877) 622-2694
FAX: (262) 679-2505

PRODUCT:

SYSTEM GT1175
LARGE & SMALL MISSILE
IMPACT RATED
AUTOMATIC SLIDING GLASS DOOR

ENGINEERING:
ENGCO INC. CA8116
5595 ORANGE DR. 201
DAVIE, FL. 33314
Tel.: (954) 585-0304
WWW.ENGCOINC.COM

PEDRO M. DE FIGUEIREDO
LICENSE
No. 52609
STATE OF FLORIDA
PROFESSIONAL ENGINEER

DEC 06 2013

Engineer Seal
Pedro De Figueiredo - PE 52609

MIAMI-DADE BCCO:

Approved as complying with the Florida Building Code
Date 12/26/13
NOA# 13-0321.14
Miami Dade Product Control
By

DATE: 10/10/2013
SCALE: NA
DESIGN BY: PPMF

SHEET	DRAWING #:
2.1 OF 21	12-090

SYSTEM GT 1175 SERIES - MODEL 1175 FS

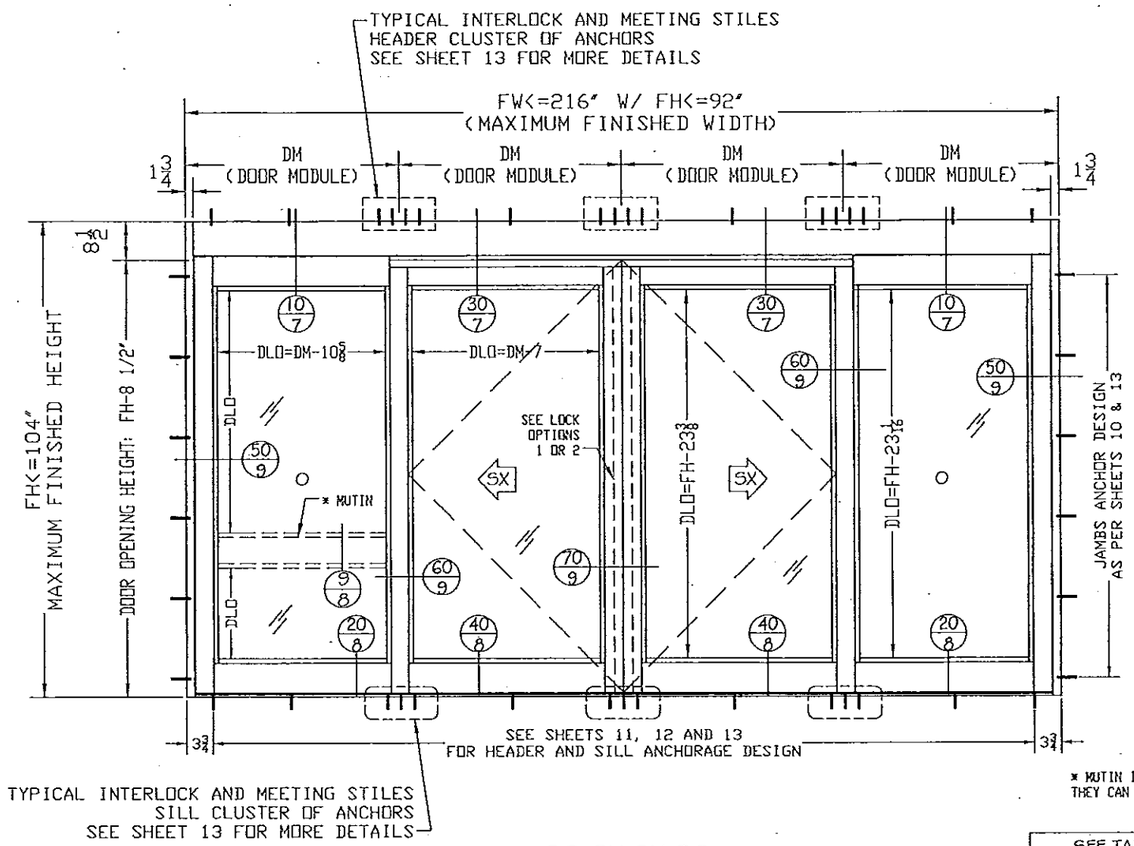

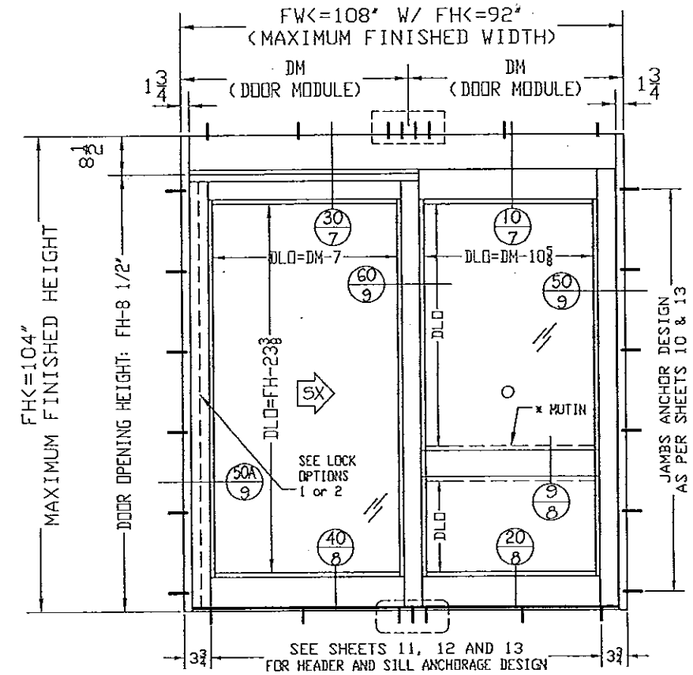

* MUTIN IS OPTIONAL FOR FS MODEL DOOR
THEY CAN BE INSTALLED IN SX OR O PANELS

SEE TABLE 2 ON SHEET 2.1 OF 21
FOR DESIGN PRESSURES

SO SX-SX SO
EXTERIOR VIEW

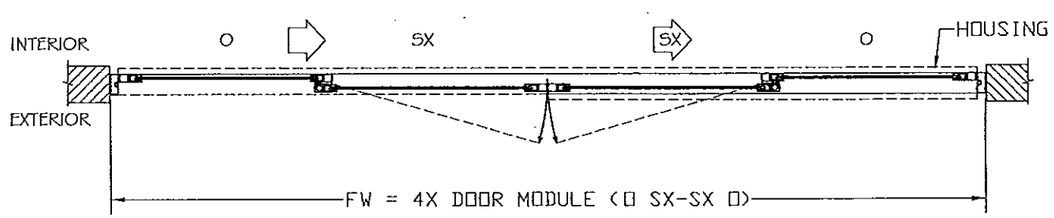

SX SO
EXTERIOR VIEW

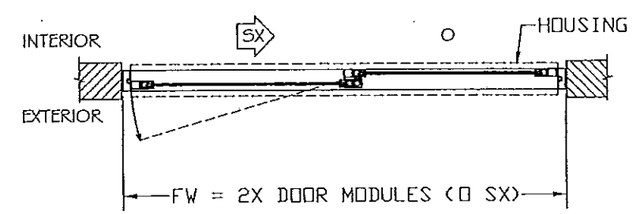

DOOR MODULE:
DM= FW/ 4 FOR (O SX-SX O)
DM= FW/2 FOR (O SX)

(4 PANELS) DOOR OPENING WIDTH: DOW= 2X DM-12
(2 PANELS) DOOR OPENING WIDTH: DOW= 1X DM- 6
DOOR OPENING HEIGHT: DOH= FH- 8 1/2"

MANUFACTURER:

NABCO

NABCO ENTRANCES INC
S82 W18717 GEMINI DRIVE
MUSKEGO, WISCONSIN 53150
PHONE: (877) 622-2694
FAX: (262) 679-2505

PRODUCT:

SYSTEM GT1175
NON IMPACT RATED
AUTOMATIC SLIDING GLASS DOOR

ENGINEERING:

ENGCO INC. CA 8116
5595 ORANGE DR. 201
DAVIE, FL. 33314
Tel.: (954) 585-0304
WWW.ENGCOINC.COM

PEDRO M. DE FIGUEIREDO
LICENSE
No. 52609
STATE OF FLORIDA
PROFESSIONAL ENGINEER

DEC 16 2013

Engineer Seal
Pedro De Figueiredo - PE 52609

MIAMI-DADE BCCO:

Approved as complying with the Florida Building Code
Date 12/26/13
NOA# 13-0422.14
Miami Dade Product Control
By

DATE: 10/10/2013
SCALE: NA
DESIGN BY: PPMF

SHEET	DRAWING #:
3 OF 21	12-091

HEADER SECTION DETAILS - 1175 FBO

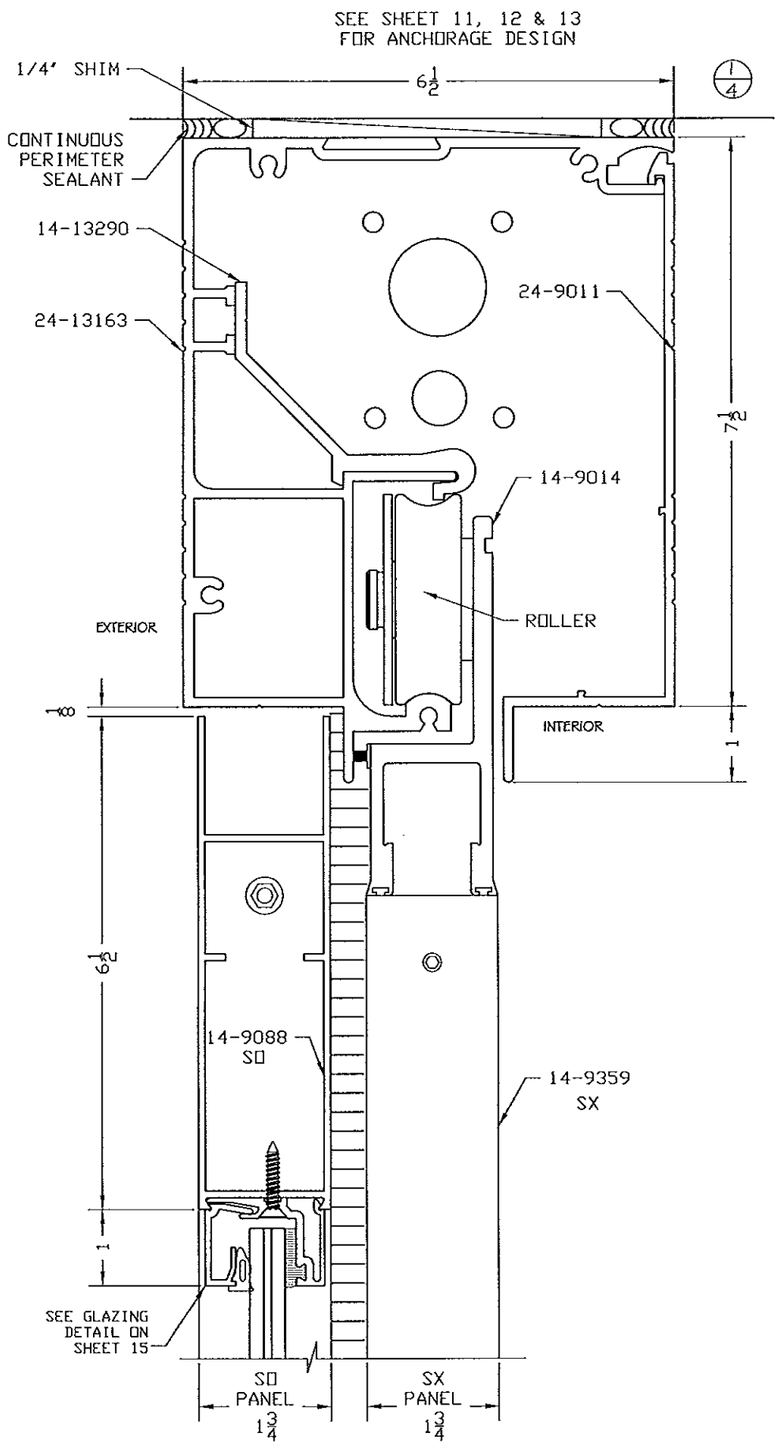

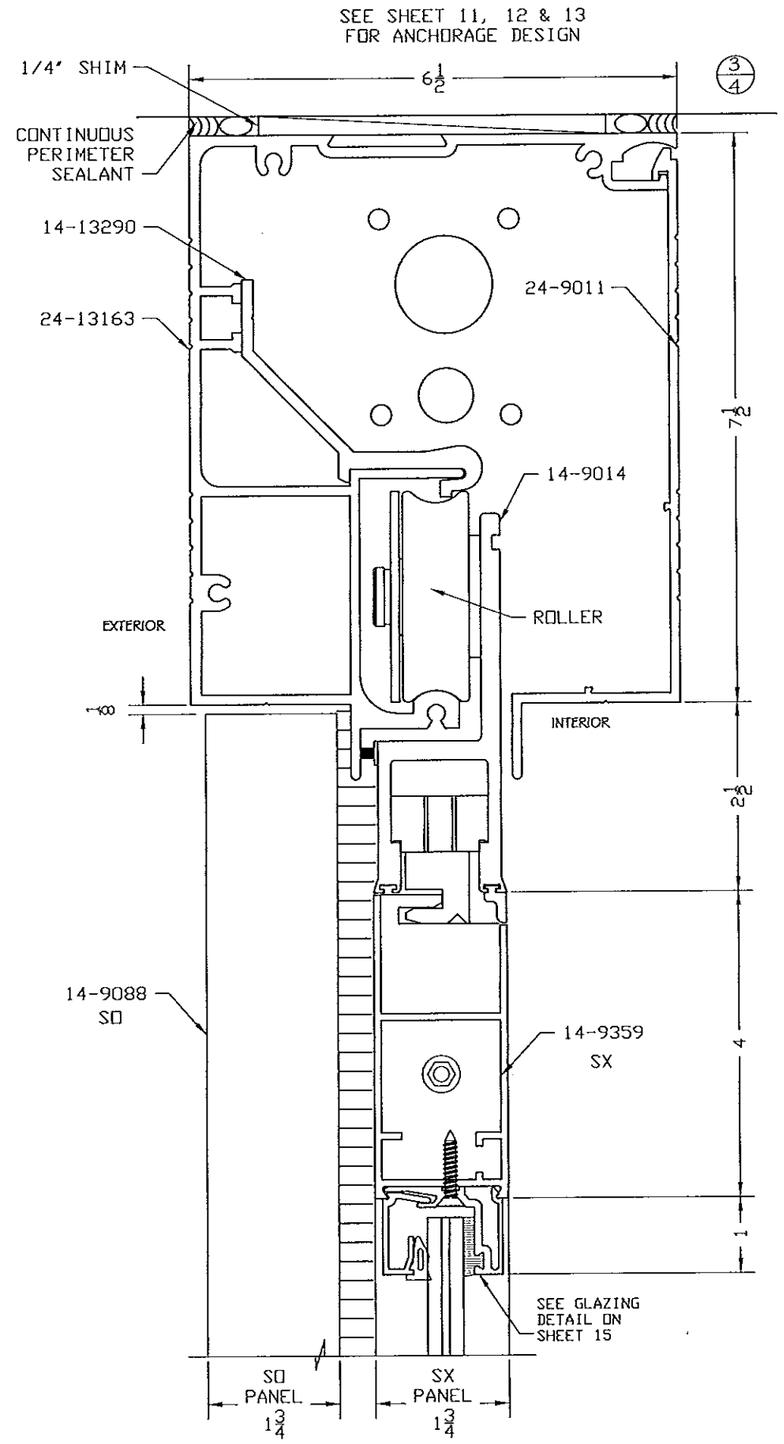

MANUFACTURER:

NABCO

NABCO ENTRANCES INC

S82 W18717 GEMINI DRIVE
MUSKEGO, WISCONSIN 53150
PHONE: (877) 622-2694
FAX: (262) 679-2505

PRODUCT:

SYSTEM GT1175
LARGE & SMALL MISSILE
IMPACT RATED
AUTOMATIC SLIDING GLASS DOOR

ENGINEERING:

ENGCO INC. CA 8116
5595 ORANGE DR. 201
DAVIE, FL. 33314
Tel.: (954) 585-0304
WWW.ENGCOINC.COM

PEDRO M. DE FIGUEIREDO
LICENSE
No. 52609
STATE OF FLORIDA
PROFESSIONAL ENGINEER

DEC 06 2013

Engineer Seal
Pedro De Figueiredo - PE 52609

MIAMI-DADE BCCO:

Approved as complying with the Florida Building Code
Date 12/26/13
NOA# 13-1221.17
Miami Dade Product Control
By

DATE: 10/10/2013
SCALE: NA
DESIGN BY: PPMF

SHEET	DRAWING #:
4 OF 21	12-090

SILL SECTION DETAILS - 1175 FBO

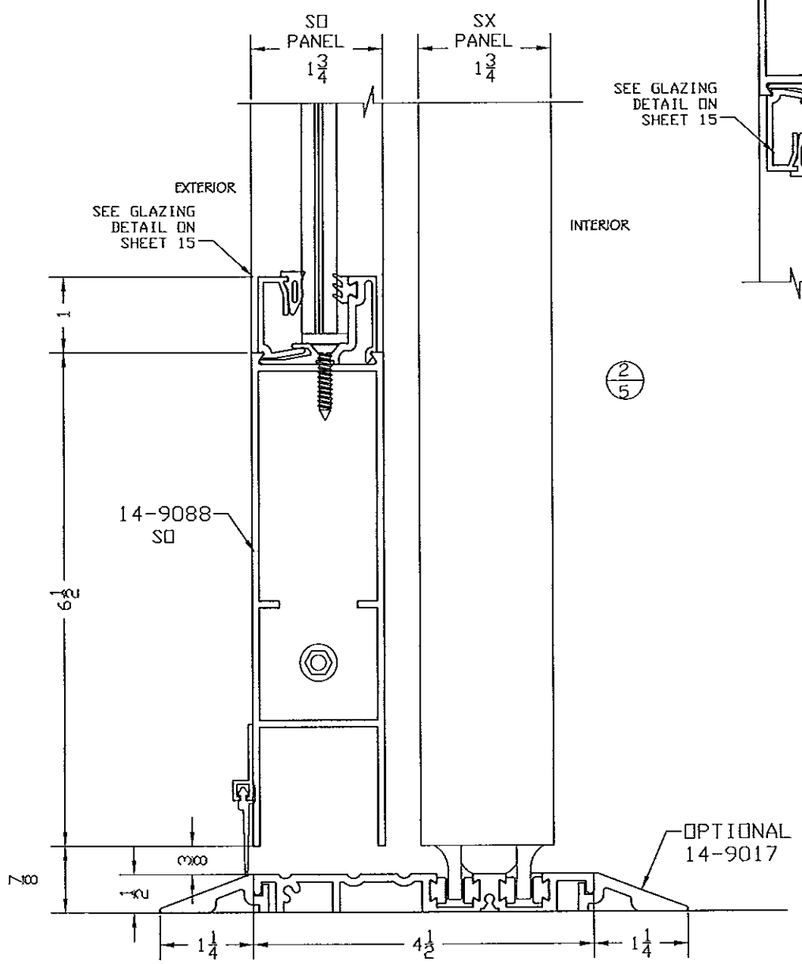

SEE SHEET 12 & 13
FOR ANCHORAGE DESIGN

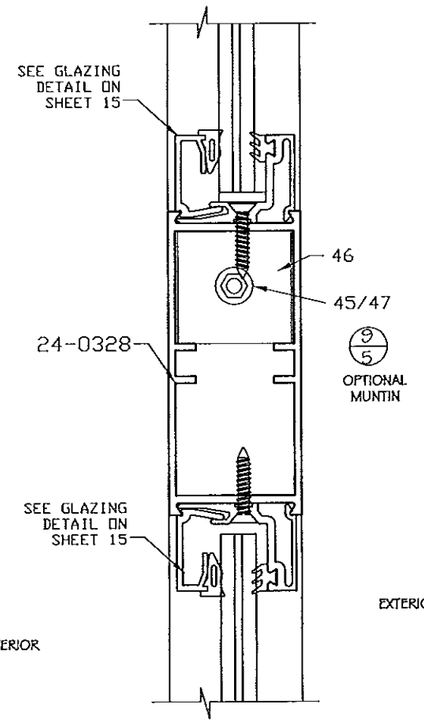

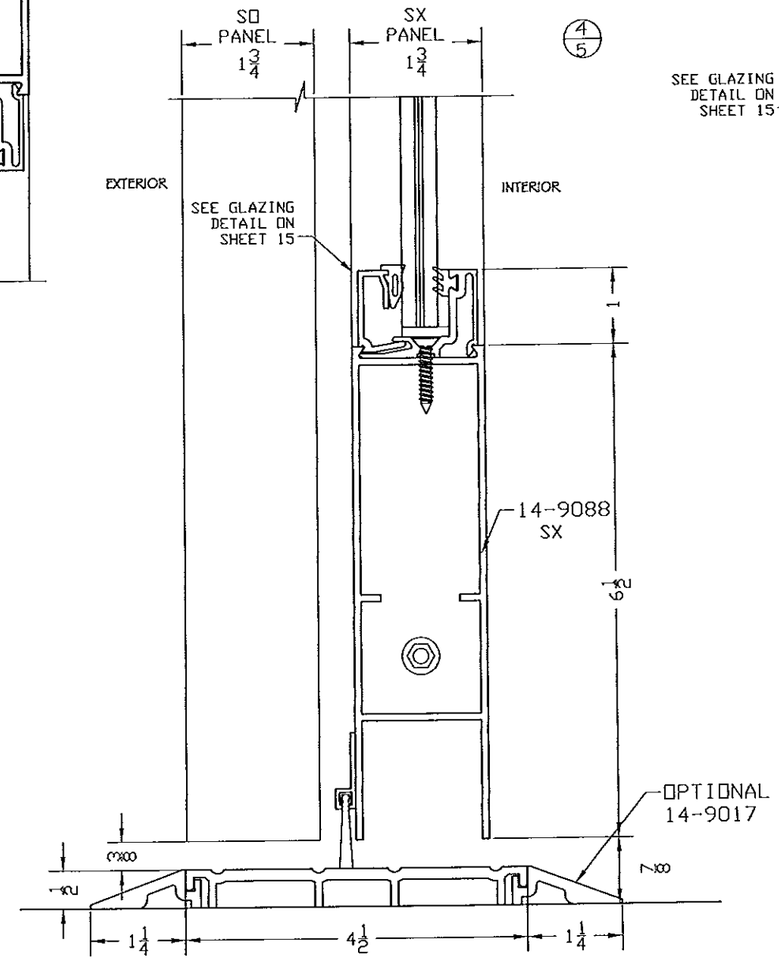

SEE SHEET 12 & 13
FOR ANCHORAGE DESIGN

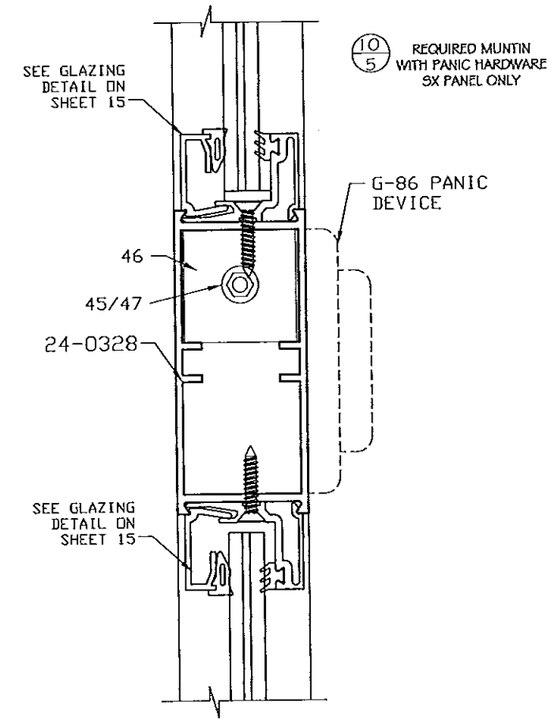

MANUFACTURER:

NABCO

NABCO ENTRANCES INC
S82 W18717 GEMINI DRIVE
MUSKEGO, WISCONSIN 53150
PHONE: (877) 622-2694
FAX: (262) 679-2505

PRODUCT:

SYSTEM GT1175
LARGE & SMALL MISSILE
IMPACT RATED
AUTOMATIC SLIDING GLASS DOOR

ENGINEERING:

ENGCO INC. CA 8116
5595 ORANGE DR. 201
DAVIE, FL. 33314
Tel.: (954) 585-0304
WWW.ENGCOINC.COM

PEDRO M. DE FIGUEIREDO
LICENSE
No. 52609
STATE OF FLORIDA
PROFESSIONAL ENGINEER

DEC 06 2013

Engineer Seal
Pedro De Figueiredo - PE 52609

MIAMI-DADE BCCO:

Approved as complying with the Florida Building Code
Date 12/24/13
NOA# 13-0322.04
Miami-Dade Product Control
By

DATE: 10/10/2013
SCALE: NA
DESIGN BY: PPMF

SHEET	DRAWING #:
5 OF 21	12-090

JAMB, INTERLOCK AND MEETING SECTION DETAILS - 1175 FBO

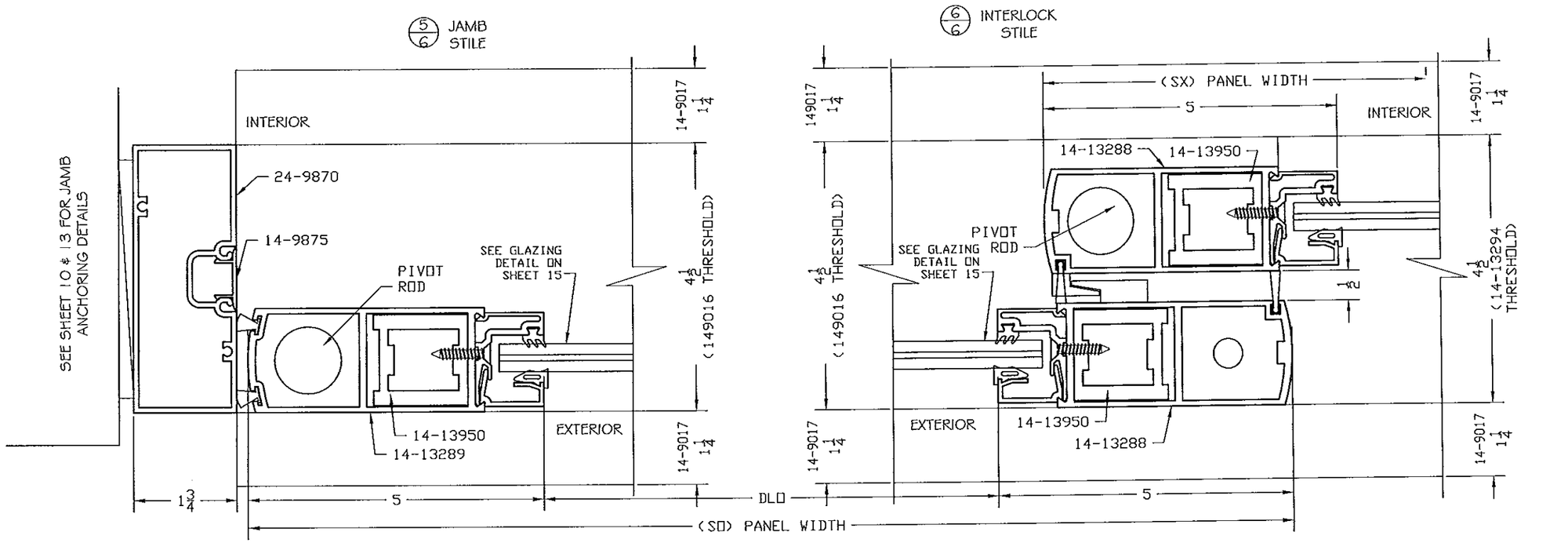

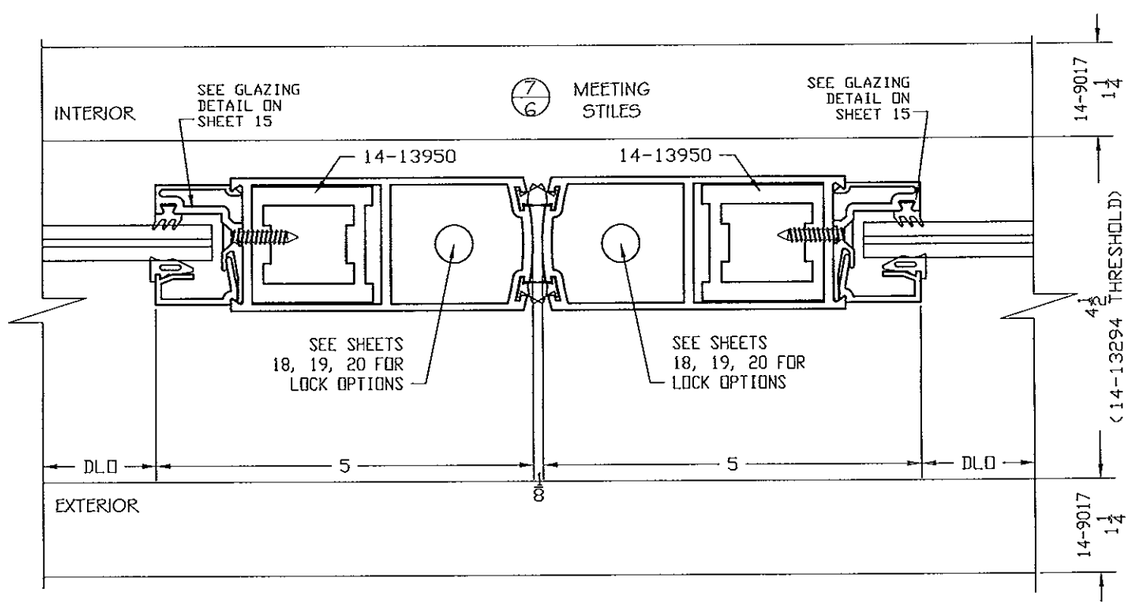

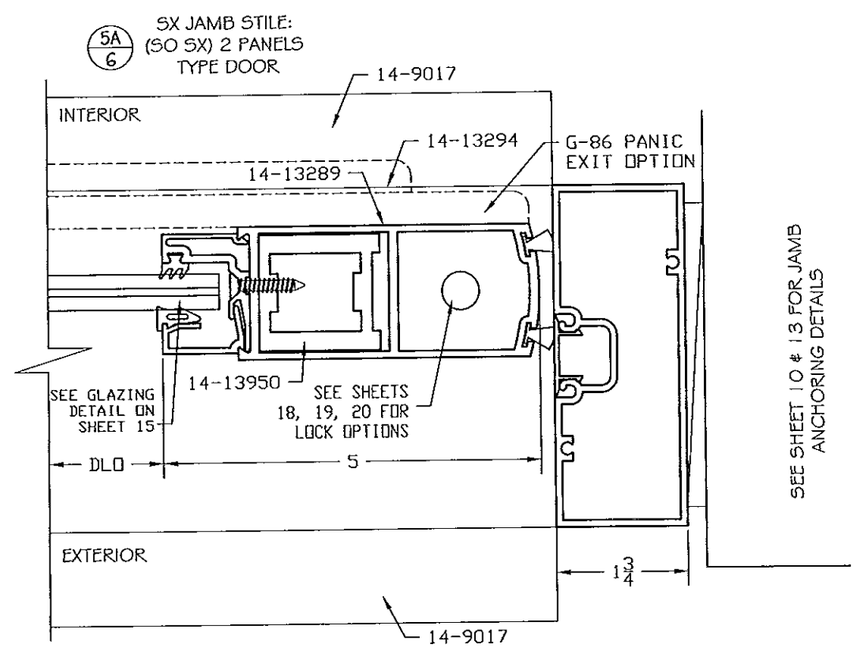

MANUFACTURER:

NABCO

NABCO ENTRANCES INC
S82 W18717 GEMINI DRIVE
MUSKEGO, WISCONSIN 53150
PHONE: (877) 622-2694
FAX: (262) 679-2505

PRODUCT:

SYSTEM GT1175
LARGE & SMALL MISSILE
IMPACT RATED
AUTOMATIC SLIDING GLASS DOOR

ENGINEERING:

ENGCO INC. CA8116
5595 ORANGE DR. 201
DAVIE, FL. 33314
Tel.: (954) 585-0304
WWW.ENGCOINC.COM

PEDRO M. DE FIGUEIREDO
LICENSE
No. 52609
STATE OF FLORIDA
PROFESSIONAL ENGINEER

DEC 06 2013

Engineer Seal
Pedro De Figueiredo - PE 52609

MIAMI-DADE BCCO:

Approved as complying with the Florida Building Code
Date 12/26/13
NOA# 13-0521.14
Miami Dade Product Control
By [signature]

DATE: 10/10/2013
SCALE: NA
DESIGN BY: PPMF

SHEET 6 OF 21

DRAWING #: 12-090

HEADER SECTION DETAILS - 1175 FS

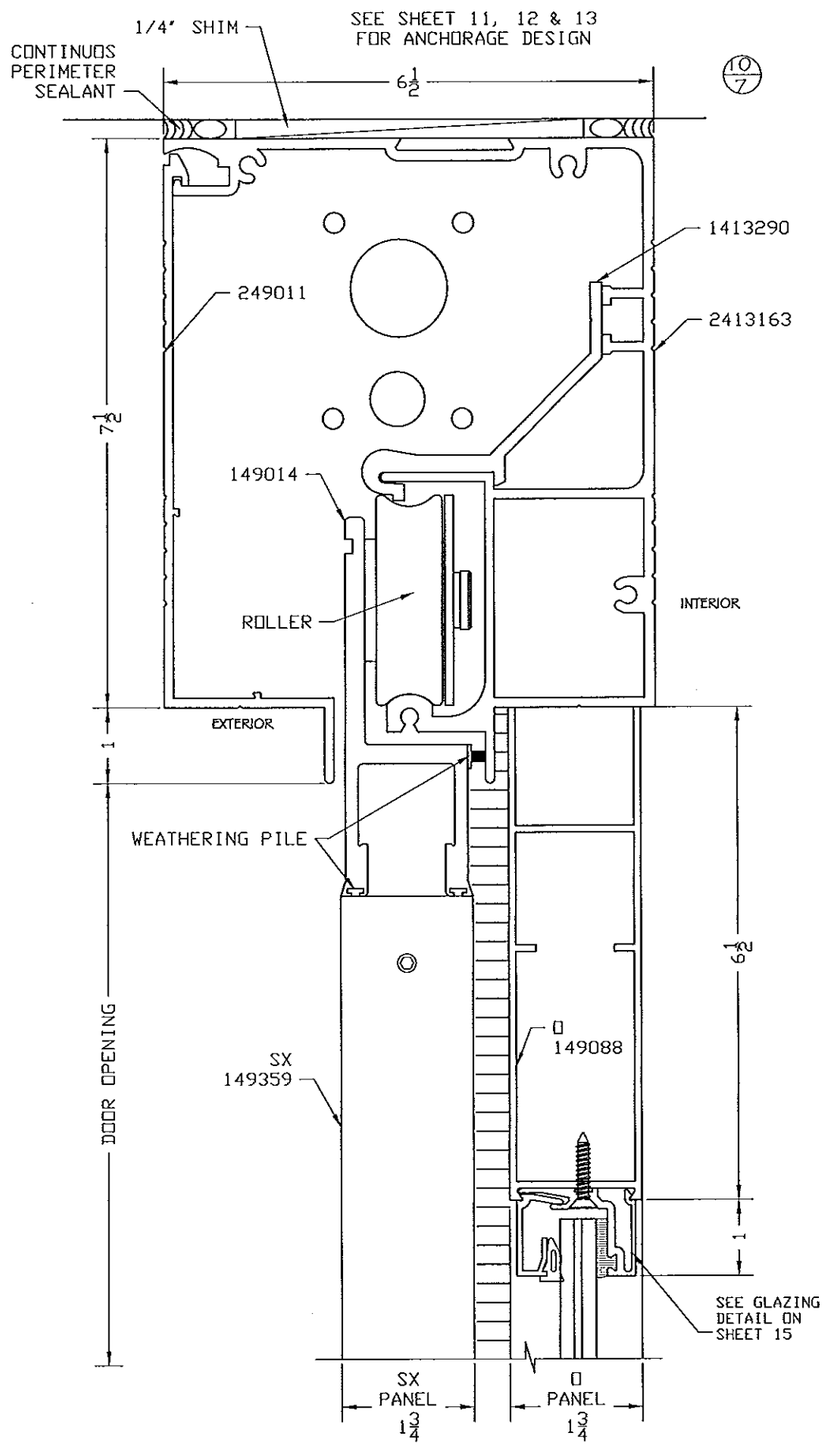

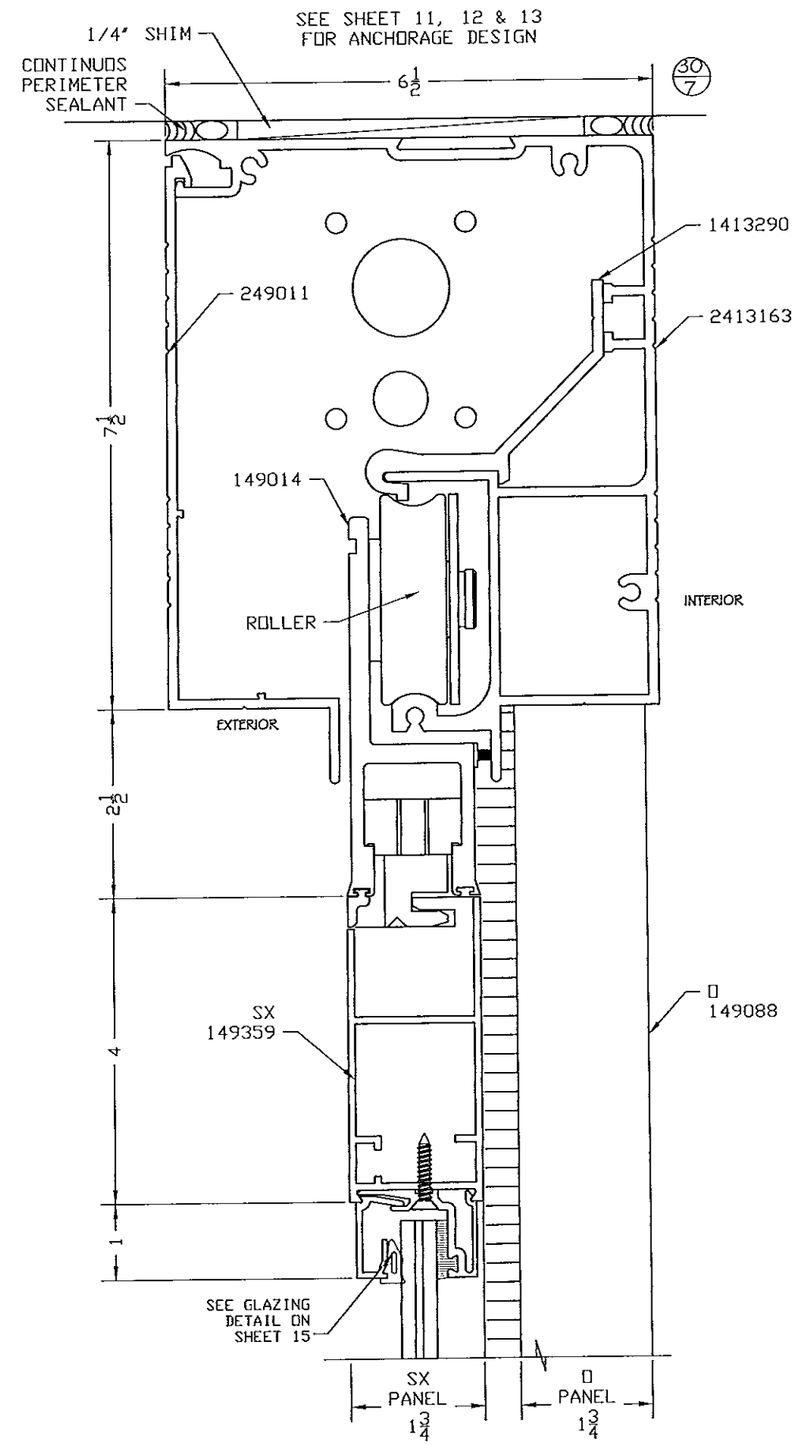

MANUFACTURER:

NABCO

NABCO ENTRANCES INC

S82 W18717 GEMINI DRIVE
MUSKEGO, WISCONSIN 53150
PHONE: (877) 622-2694
FAX: (262) 679-2505

PRODUCT:

SYSTEM GT1175
LARGE & SMALL MISSILE
IMPACT RATED
AUTOMATIC SLIDING GLASS DOOR

ENGINEERING:

ENGCO INC. CA 8116
5595 ORANGE DR. 201
DAVIE, FL. 33314
Tel.: (954) 585-0304
WWW.ENGCOINC.COM

PEDRO M. DE FIGUEIREDO
LICENSE
No. 52609
STATE OF FLORIDA
PROFESSIONAL ENGINEER

DEC 06 2013

Engineer Seal
Pedro De Figueiredo - PE 52609

MIAMI-DADE BCCO:

Approved as complying with the Florida Building Code
Date 12/26/13
NOA# 13-0521.14
Miami Dade Product Control
By [signature]

DATE: 10/10/2013
SCALE: NA
DESIGN BY: PPMF

SHEET	DRAWING #:
7 OF 21	12-090

SILL SECTION DETAILS - 1175 FS

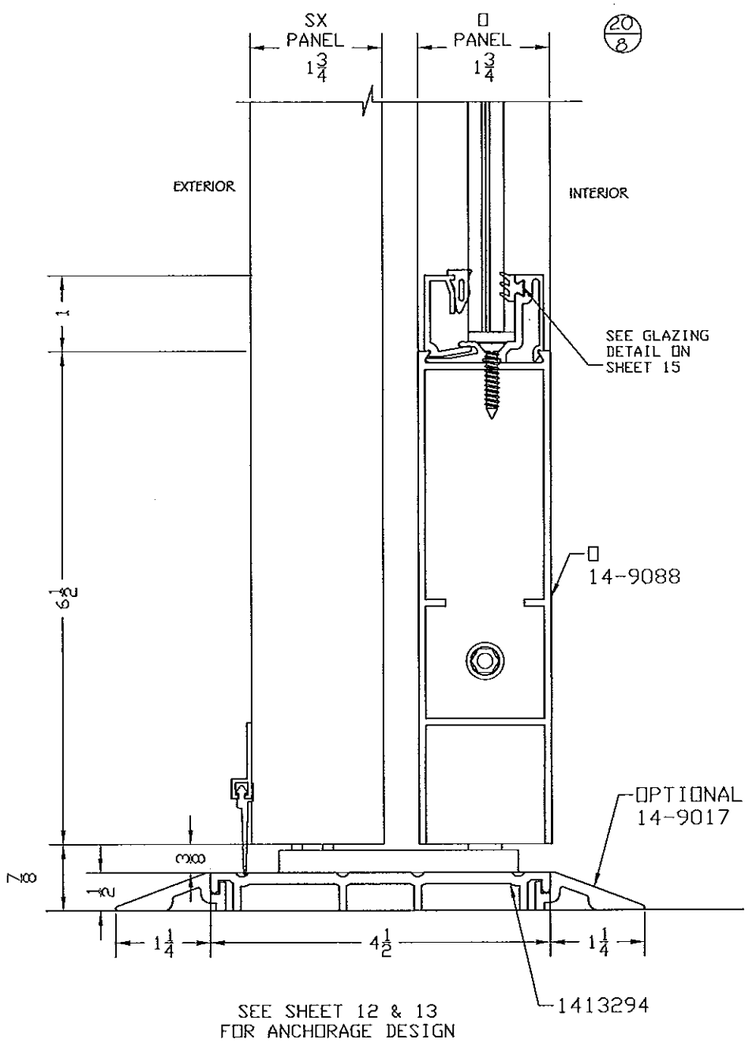

SEE SHEET 12 & 13
FOR ANCHORAGE DESIGN

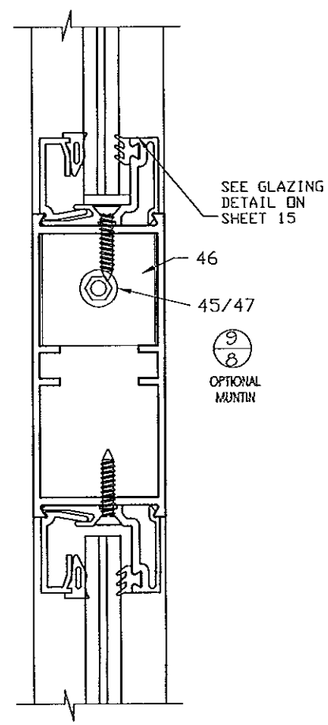

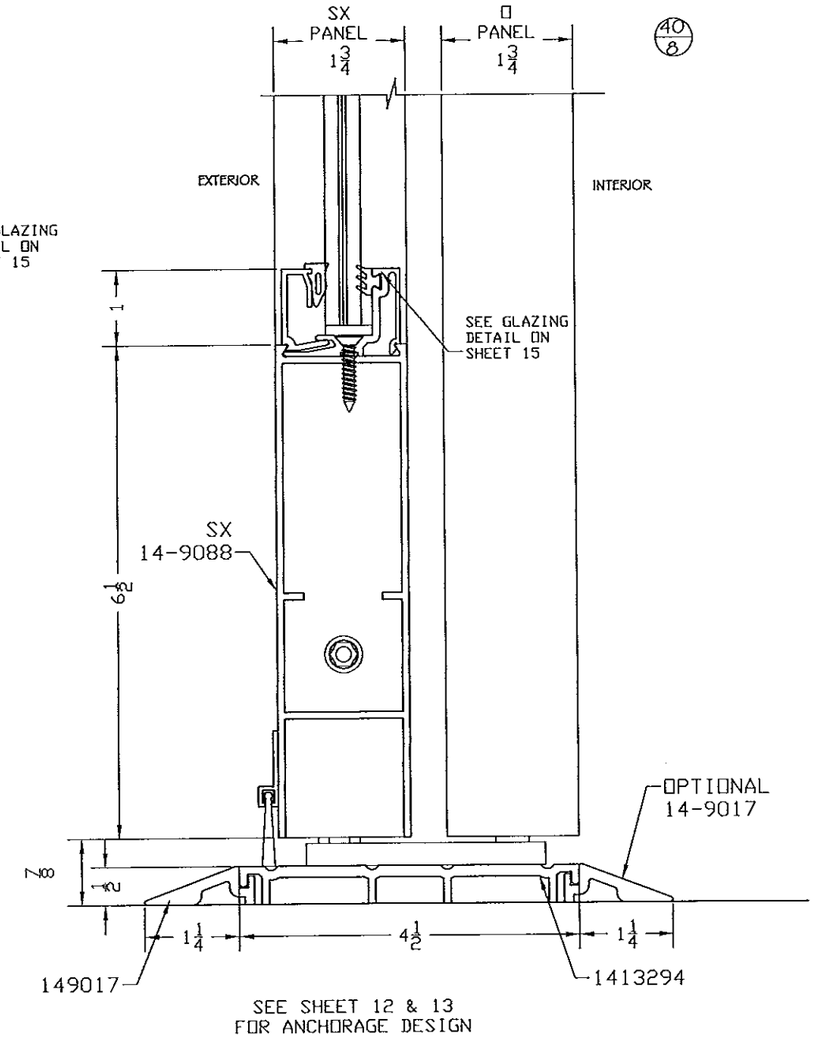

SEE SHEET 12 & 13
FOR ANCHORAGE DESIGN

MANUFACTURER:

NABCO

NABCO ENTRANCES INC

S82 W18717 GEMINI DRIVE
MUSKEGO, WISCONSIN 53150
PHONE: (877) 622-2694
FAX: (262) 679-2505

PRODUCT:

SYSTEM GT1175
LARGE & SMALL MISSILE
IMPACT RATED
AUTOMATIC SLIDING GLASS DOOR

ENGINEERING:

ENGCO INC. CA 8116
5595 ORANGE DR. 201
DAVIE, FL. 33314
Tel.: (954) 585-0304
WWW.ENGCOINC.COM

PEDRO M. DE FIGUEIREDO
LICENSE
No. 52609
STATE OF FLORIDA
PROFESSIONAL ENGINEER

DEC 06 2013

Engineer Seal
Pedro De Figueiredo - PE 52609

MIAMI-DADE BCCO:

Approved as complying with the Florida Building Code
Date 12/26/13
NOA# 13-0521.19
Miami Dade Product Control
By

DATE: 10/10/2013
SCALE: NA
DESIGN BY: PPMF

SHEET	DRAWING #:
8 OF 21	12-090

JAMB, INTERLOCK AND MEETING SECTION DETAILS - 1175 FS

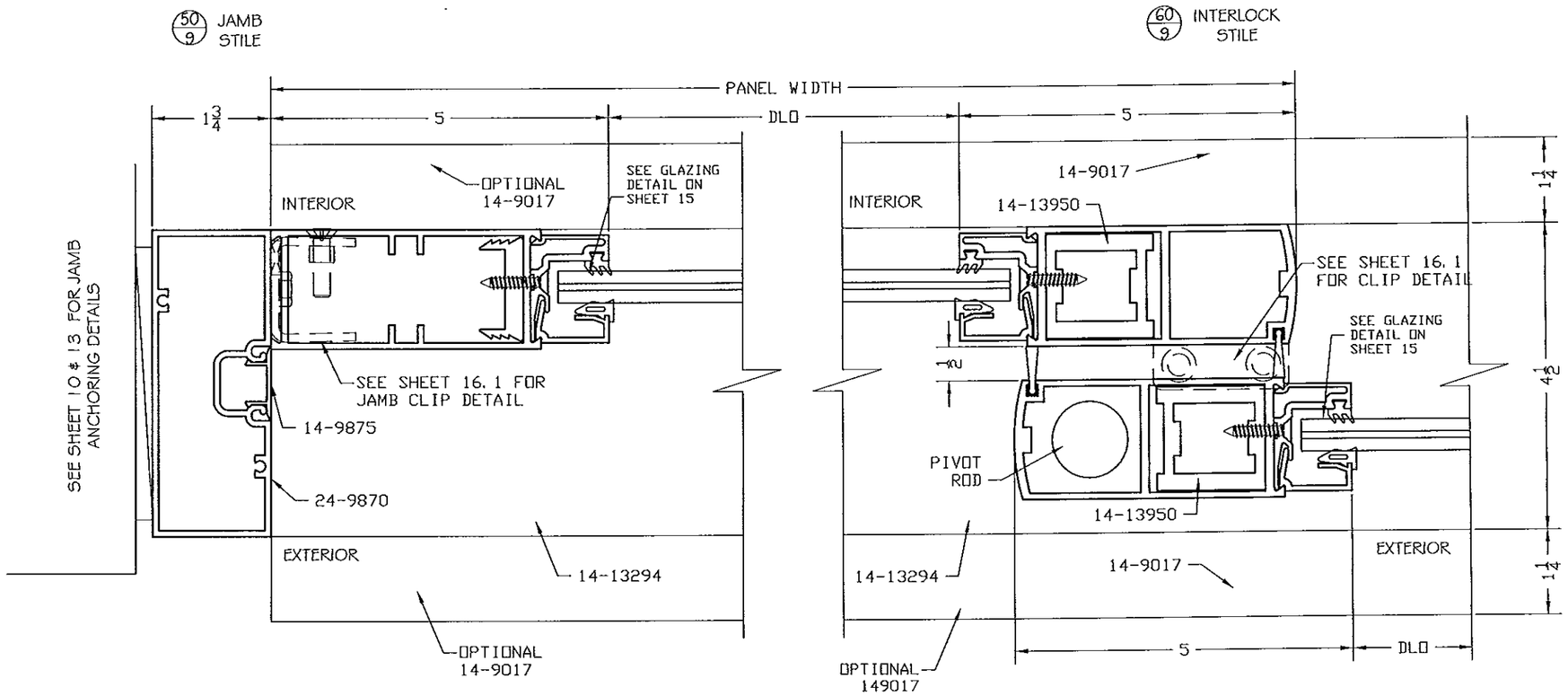

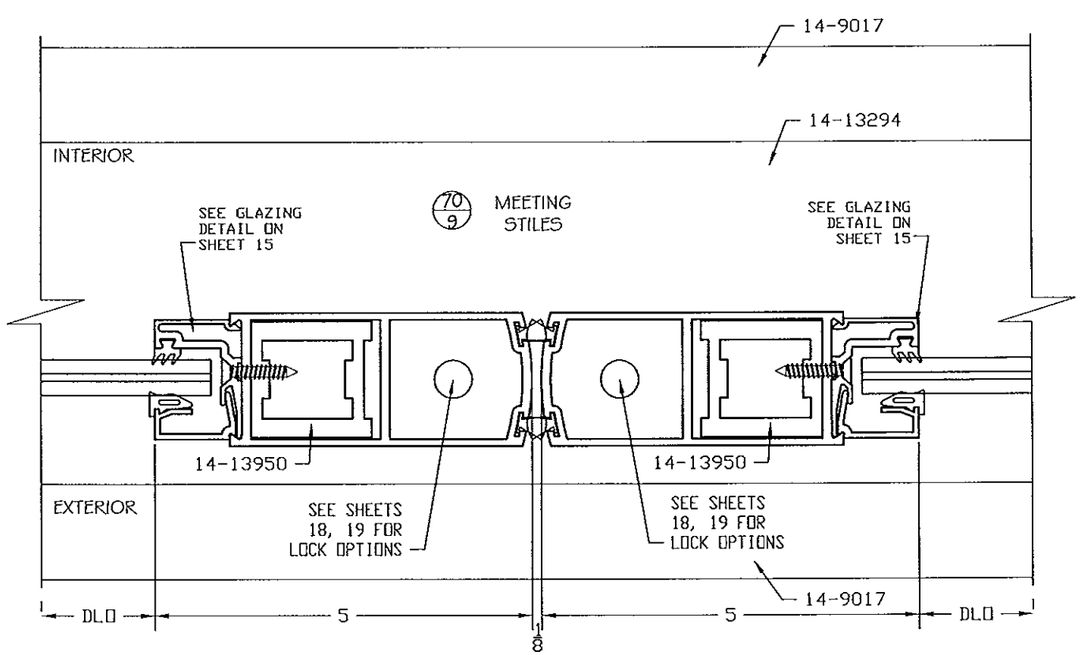

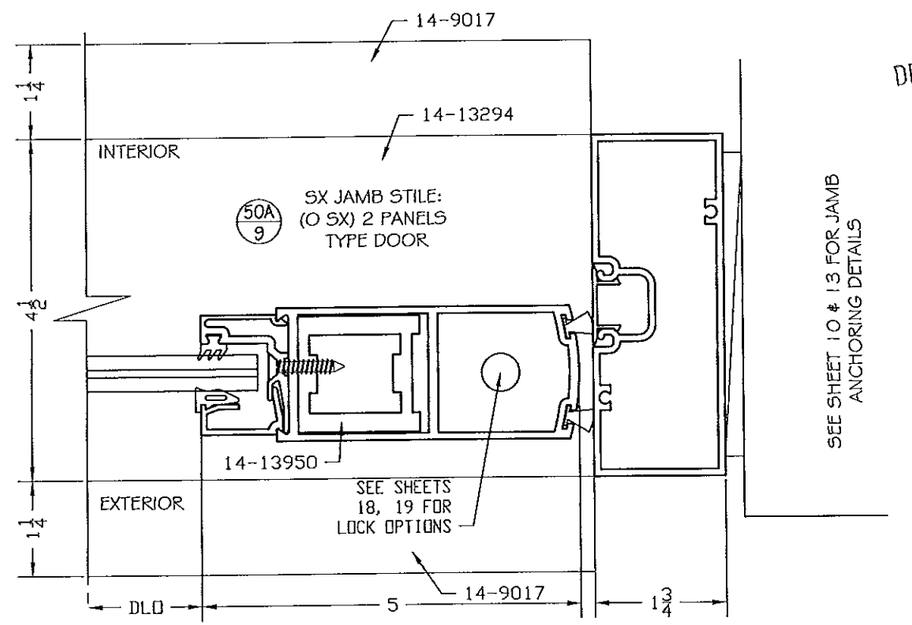

MANUFACTURER:

NABCO

NABCO ENTRANCES INC

S82 W18717 GEMINI DRIVE
MUSKEGO, WISCONSIN 53150
PHONE: (877) 622-2694
FAX: (262) 679-2505

PRODUCT:

SYSTEM GT1 1175
LARGE & SMALL MISSILE
IMPACT RATED
AUTOMATIC SLIDING GLASS DOOR

ENGINEERING:

ENGCO INC. CA 8116
5595 ORANGE DR. 201
DAVIE, FL. 33314
Tel.: (954) 585-0304
WWW.ENGCOINC.COM

PEDRO M. DE FIGUEIREDO
LICENSE
No. 52609
STATE OF FLORIDA
PROFESSIONAL ENGINEER

DEC 06 2013

Engineer Seal
Pedro De Figueiredo - PE 52609

MIAMI-DADE BCCO:

Approved as complying with the Florida Building Code
Date 12/26/13
NOA# 12-0524.13
Miami Dade Product Control
By

DATE: 10/10/2013
SCALE: NA
DESIGN BY: PPMF

SHEET	DRAWING #:
9 OF 21	12-090

JAMB FRAMING ANCHORAGE DETAILS

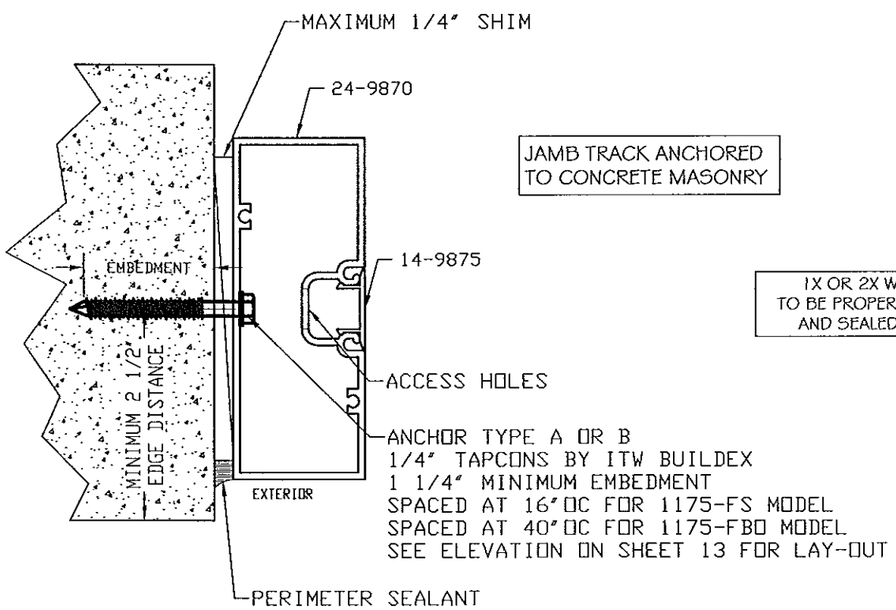

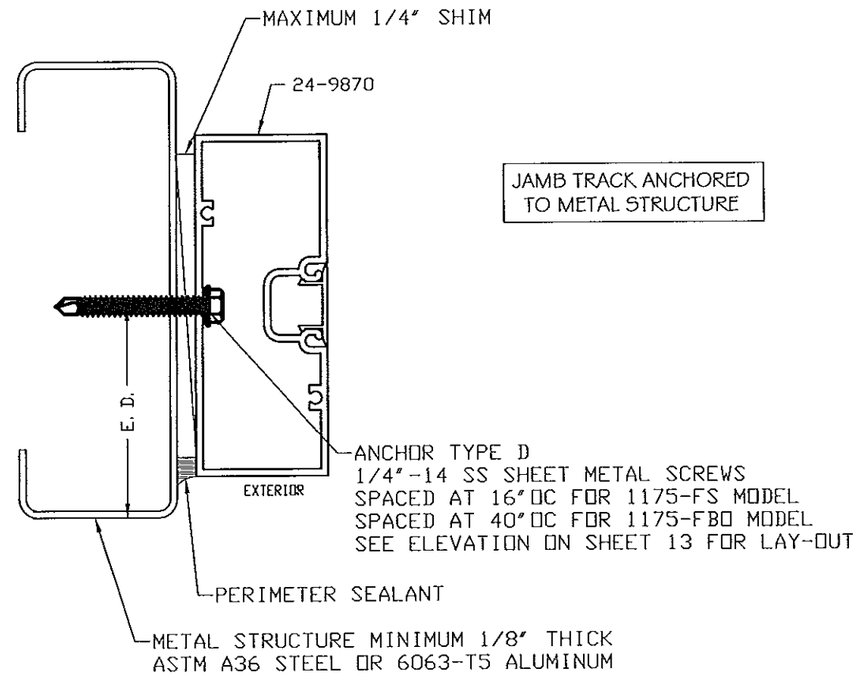

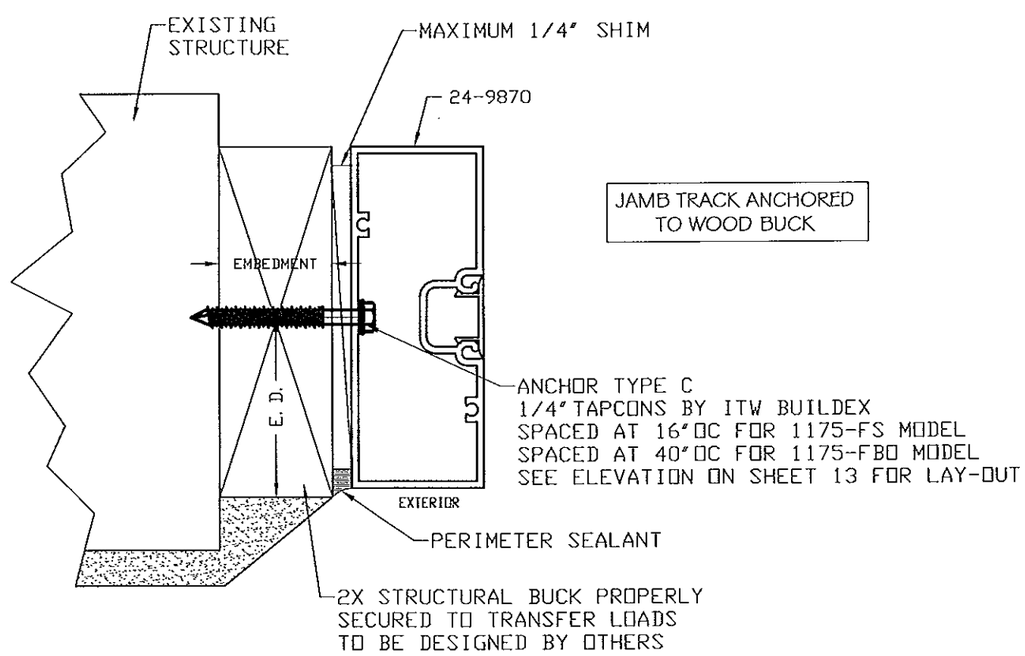

MANUFACTURER:

NABCO

NABCO ENTRANCES INC
S82 W18717 GEMINI DRIVE
MUSKEGO, WISCONSIN 53150
PHONE: (877) 622-2694
FAX: (262) 679-2505

PRODUCT:

SYSTEM GT1 175
LARGE & SMALL MISSILE
IMPACT RATED
AUTOMATIC SLIDING GLASS DOOR

ENGINEERING:

ENGCO INC. CA 8116
5595 ORANGE DR. 201
DAVIE, FL. 33314
Tel.: (954) 585-0304
WWW.ENGCOINC.COM

PEDRO M. DE FIGUEIREDO
LICENSE
No. 52609
STATE OF FLORIDA
PROFESSIONAL ENGINEER

DEC 06 2013

Engineer Seal
Pedro De Figueiredo - PE 52609

MIAMI-DADE BCCO:

Approved as complying with the Florida Building Code
Date 12/26/13
NOA# 13-0521.14
Miami Dade Product Control
By

DATE: 10/10/2013
SCALE: NA
DESIGN BY: PPMF

SHEET	DRAWING #:
10 OF 21	12-090

HEADER FRAMING ANCHORAGE DETAILS

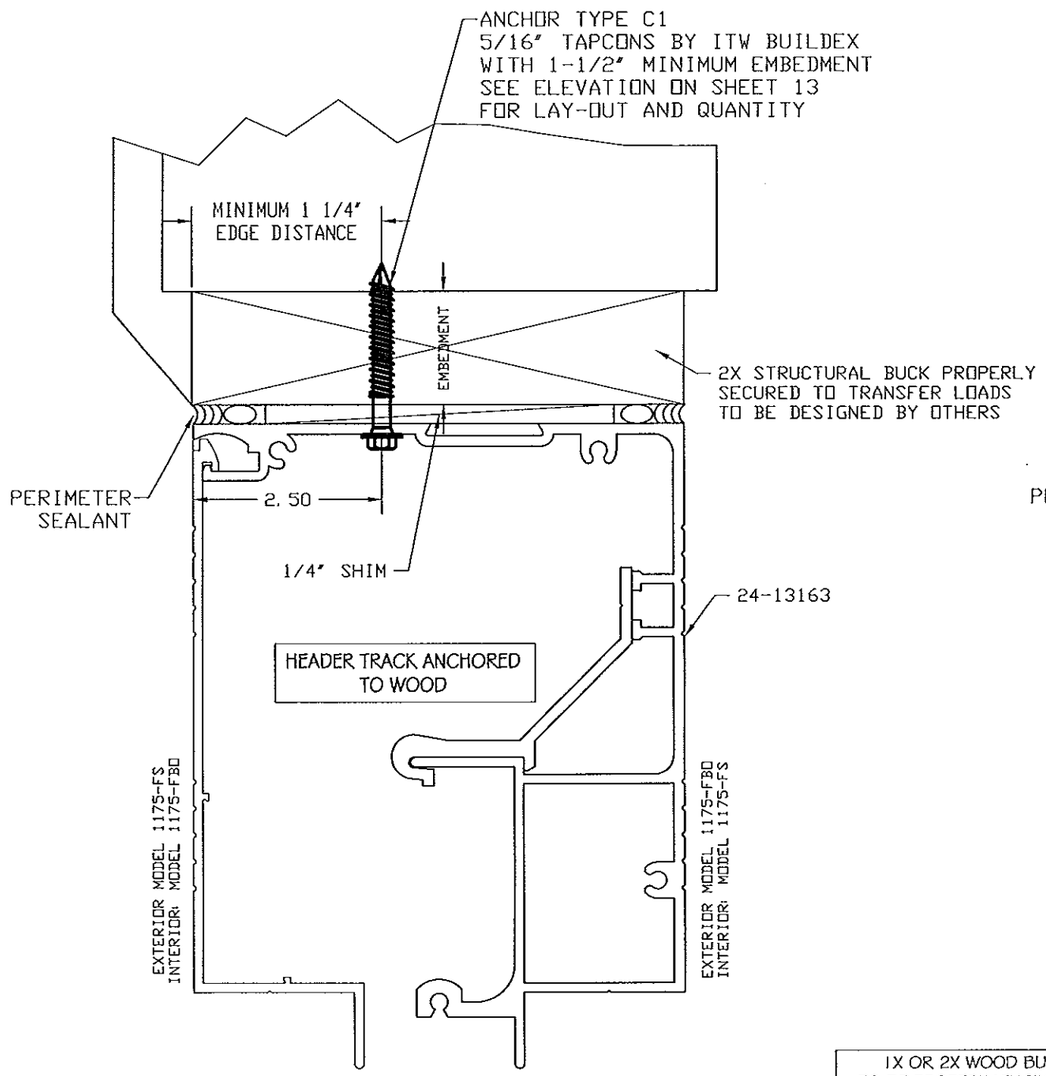

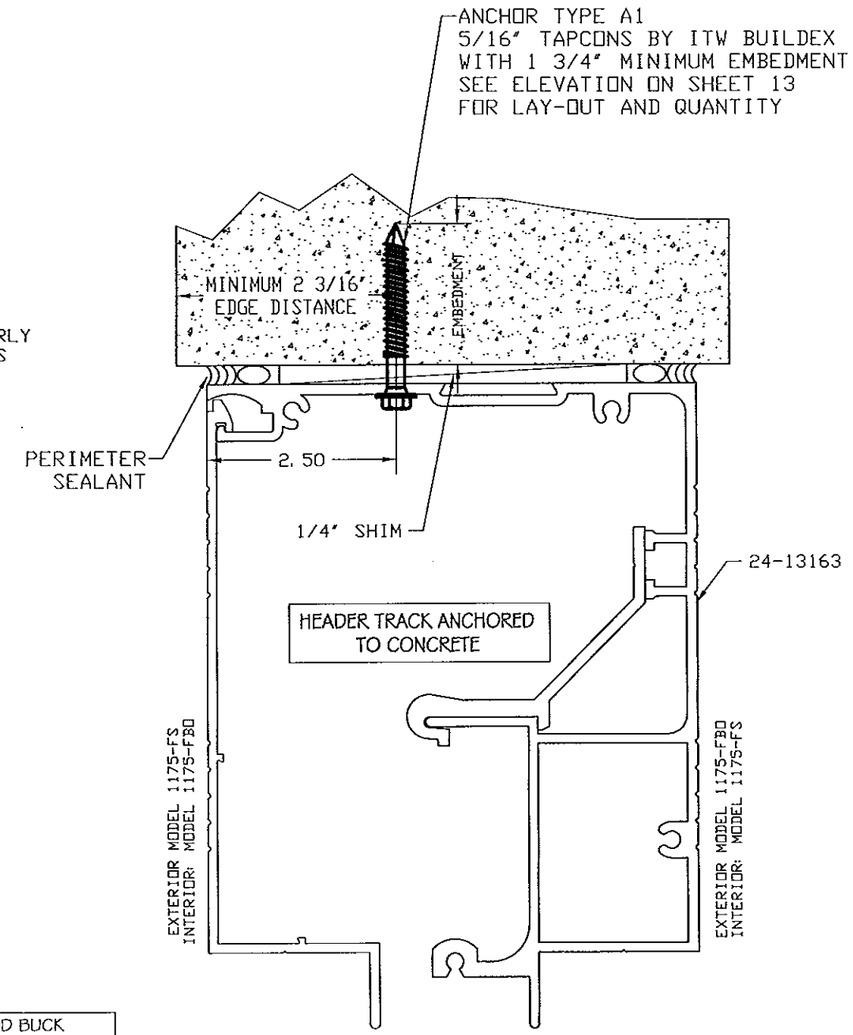

1X OR 2X WOOD BUCK
TO BE PROPERLY ENGINEERED
AND SEALED BY OTHERS

MANUFACTURER:

NABCO

NABCO ENTRANCES INC

S82 W18717 GEMINI DRIVE
MUSKEGO, WISCONSIN 53150
PHONE: (877) 622-2694
FAX: (262) 679-2505

PRODUCT:

SYSTEM GT1175
LARGE & SMALL MISSILE
IMPACT RATED
AUTOMATIC SLIDING GLASS DOOR

ENGINEERING:

ENGCO INC. CA 8116
5595 ORANGE DR. 201
DAVIE, FL. 33314
Tel.: (954) 585-0304
WWW.ENGCOINC.COM

PEDRO M. DE FIGUEIREDO
LICENSE
No. 52609
STATE OF
FLORIDA
PROFESSIONAL ENGINEER

DEC 06 2013

Engineer Seal
Pedro De Figueiredo - PE 52609

MIAMI-DADE BCCO:

Approved as complying with the
Florida Building Code
Date 12/26/13
NOA# 13-0521.14
Miami Dade Product Control
By

DATE: 10/10/2013
SCALE: NA
DESIGN BY: PPMF

SHEET	DRAWING #:
11 OF 21	12-090

HEADER & SILL FRAMING ANCHORAGE DETAILS

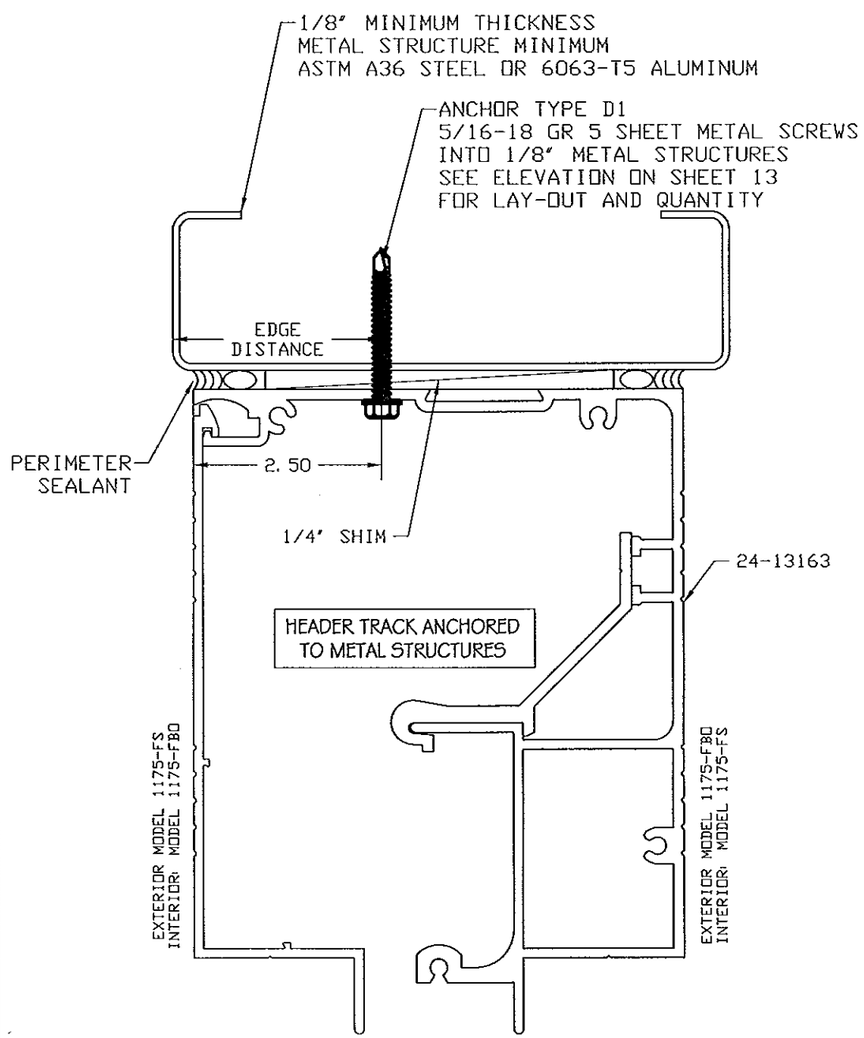

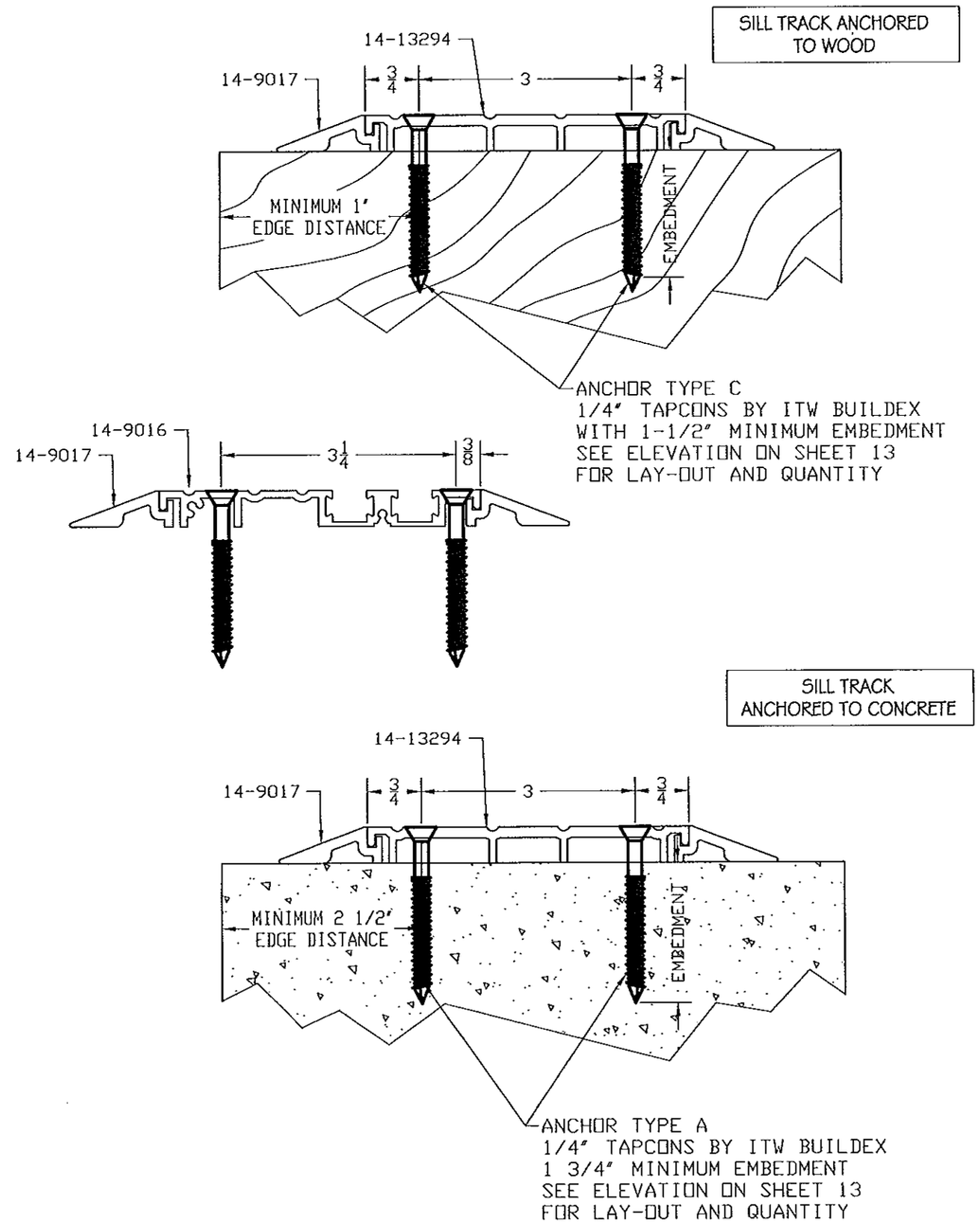

MANUFACTURER:

NABCO

NABCO ENTRANCES INC

S82 W18717 GEMINI DRIVE
MUSKEGO, WISCONSIN 53150
PHONE: (877) 622-2694
FAX: (262) 679-2505

PRODUCT:

SYSTEM GT1 175
LARGE & SMALL MISSILE
IMPACT RATED
AUTOMATIC SLIDING GLASS DOOR

ENGINEERING:

ENGCO INC. CA 8116
5595 ORANGE DR. 201
DAVIE, FL. 33314
Tel.: (954) 585-0304
WWW.ENGCOINC.COM

PEDRO M. DE FIGUEIREDO
LICENSE
No. 52609
STATE OF FLORIDA
PROFESSIONAL ENGINEER

DEC 06 2013

Engineer Seal
Pedro De Figueiredo - PE 52609

MIAMI-DADE BCCO:

Approved as complying with the Florida Building Code
Date 12/26/13
NOA# 12-0521.12
Miami Dade Product Control
By

DATE: 10/10/2013
SCALE: NA
DESIGN BY: PPMF

SHEET	DRAWING #:
12 OF 21	12-090

TABLE 3 - FRAMING SILL TRACK ANCHORAGE CAPACITY IN PSF
FUNCTION OF ANCHOR TYPE AND NUMBER OF PAIR CLUSTERS
AT MEETING AND INTERLOCK STILES

ANCHOR TYPE AND # OF PAIR / CLUSTERS			
FH	DM	TYPE A OR C	
(IN)	(IN)	3 PAIR CLUSTERS	2 PAIR CLUSTERS
92	36	105	70
	39	97	65
	42	90	60
	45	84	56
	48	79	53
	54	70	47
96	36	101	67
	39	93	62
	42	87	58
	45	81	54
	48	76	51
	52	70	47
100	36	97	65
	39	90	60
	42	83	55
	45	78	52
	48	73	48
	49	70	47
104	36	93	62
	39	86	57
	42	80	53
	45	75	50
	48	70	47

FRAMING ANCHORAGE SELECTION

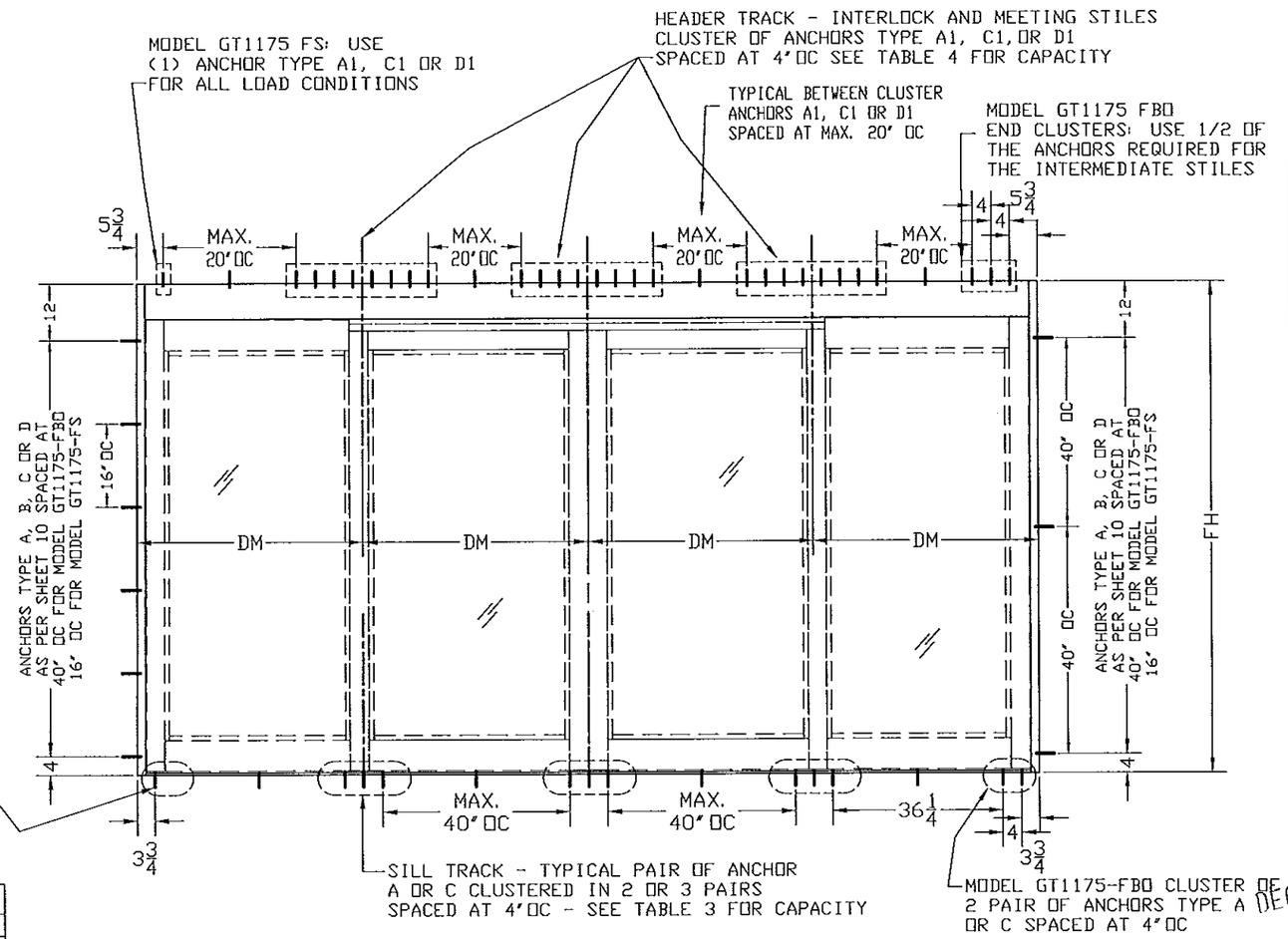

TABLE 4 - FRAMING HEADER TRACK ANCHORAGE CAPACITY IN PSF
FUNCTION OF ANCHOR TYPE AND NUMBER OF CLUSTERS
AT MEETING AND INTERLOCK STILES

		ANCHOR TYPE AND # OF SINGLE ROW/CLUSTERS												
FH	DM	A1				C1				D1				TYPE
IN	IN	10	8	6	4	10	8	6	4	10	8	6	4	CLUSTERS
92	36	105	105	79	53	105	97	72	48	105	90	68	45	
	39	97	97	73	49	97	89	67	45	97	83	62	42	
	42	90	90	68	45	90	83	62	41	90	77	58	39	
	45	84	84	63	42	84	77	58	39	84	72	54	36	
	48	79	79	59	40	79	72	54	36	79	68	51	34	
	54	70	70	53	35	70	64	48	32	70	60	45	30	
96	36	101	101	76	51	101	93	69	46	101	87	65	43	
	39	93	93	70	47	93	85	64	43	93	80	60	40	
	42	87	87	65	43	87	79	59	40	87	74	56	37	
	45	81	81	61	41	81	74	56	37	81	69	52	35	
	48	76	76	57	38	76	69	52	35	76	65	49	32	
	52	70	70	53	35	70	64	48	32	70	60	45	30	
100	36	97	97	73	49	97	89	67	44	97	83	62	42	
	39	90	90	67	45	90	82	61	41	90	77	57	38	
	42	83	83	63	42	83	76	57	38	83	71	53	36	
	45	78	78	58	39	78	71	53	36	78	66	50	33	
	48	73	73	55	36	73	67	50	33	73	62	47	31	
	49	70	70	53	35	70	64	48	32	70	60	45	30	
104	36	93	93	70	47	93	85	64	43	93	80	60	40	
	39	86	86	65	43	86	79	59	39	86	74	55	37	
	42	80	80	60	40	80	73	55	37	80	68	51	34	
	45	75	75	56	37	75	68	51	34	75	64	48	32	
	48	70	70	53	35	70	64	48	32	70	60	45	30	

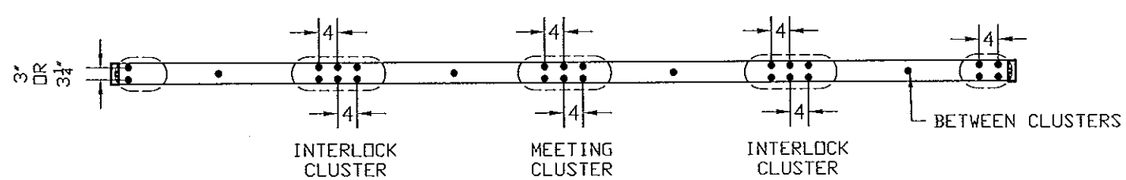

ANCHOR TYPES:	MINIMUM EDGE DISTANCE
A- 1/4" TAPCON BY ITW WITH 1 3/4" MIN. EMBEDMENT INTO 3000 PSI CONCRETE	2 1/2"
A1- 5/16" TAPCON BY ITW WITH 1 3/4" MIN. EMBEDMENT INTO 3000 PSI CONCRETE	2 3/16"
B- 1/4" TAPCON BY ITW WITH 1 1/4" MIN. EMBEDMENT INTO HOLLOW BLOCK	2 1/2"
C- 1/4" TAPCON BY ITW WITH 1 1/2" MIN. EMBEDMENT INTO PT WOOD (SG=0.55)	1"
C1- 5/16" TAPCON (Fy=115 Ksi) BY ITW WITH 1 1/2" MIN. EMBEDMENT INTO PT WOOD (SG=0.55)	1 1/4"
D- 1/4-14 GR 5 SHEET METAL SCREWS INTO 1/8" METAL STRUCTURES	1/2"
D1- 5/16-18 GR 5 SHEET METAL SCREWS INTO 1/8" METAL STRUCTURES	1"

NOTES:
1- MINIMUM EMBEDMENT ARE BEYOND WALL DRESSING
2- TAPCONS WITH FLAT, HEX AND/OR PAN HEADS CAN BE USED
3- METAL STRUCTURES ARE ASTM A36 STEEL OR 6063-T6 ALUMINUM
4- ANCHOR TYPE D MUST HAVE A MINIMUM 3 THREADS EMBEDMENT
5 - HEADER & JAMB ANCHORS ARE INSTALLED INTO A SINGLE ROW
6- SILL ANCHORS ARE DISTRIBUTED INTO TWO IN LINE ROWS

MANUFACTURER:

NABCO

NABCO ENTRANCES INC
S82 W18717 GEMINI DRIVE
MUSKEGO, WISCONSIN 53150
PHONE: (877) 622-2694
FAX: (262) 679-2505

PRODUCT:

SYSTEM GT1175
LARGE & SMALL MISSILE
IMPACT RATED
AUTOMATIC SLIDING GLASS DOOR

ENGINEERING:

ENGCO INC. CA8116
5595 ORANGE DR. 201
DAVIE, FL. 33314
Tel.: (954) 585-0304
WWW.ENGCOINC.COM

PEDRO M. DE FIGUEIREDO
LICENSE
No. 52609
STATE OF FLORIDA
PROFESSIONAL ENGINEER

06 2013

Engineer Seal
Pedro De Figueiredo - PE 52609

MIAMI-DADE BCCO:

Approved as complying with the Florida Building Code
Date 12/26/13
NOA# 12-0326.04
Miami Dade Product Control
By

DATE: 10/10/2013
SCALE: NA
DESIGN BY: PPMF

SHEET 13 OF 21

DRAWING #: 12-090

DOOR COMPONENTS

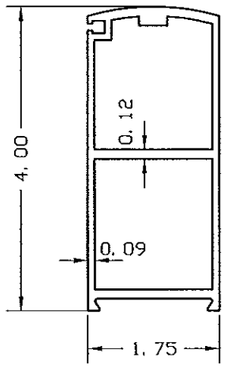

14-13288
4" PIVOT STILE
ALLOY: 6063-T5

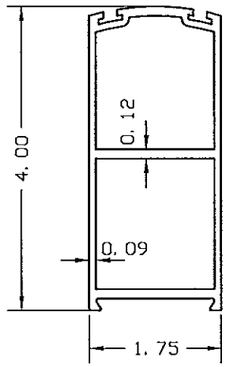

14-13289
4" STILE
ALLOY: 6063-T5

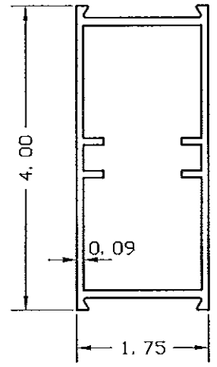

24-0328
4" FIXED VERTICAL
STILE AND MUNTIN
ALLOY: 6063-T5

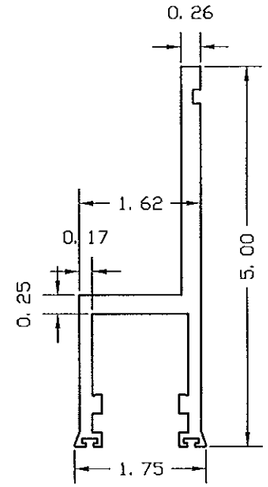

14-9014
DOOR CARRIER
ALLOY: 6063-T5

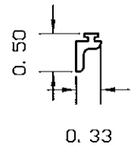

14-9015
INTERFACE LEG
ALLOY:6063-T5

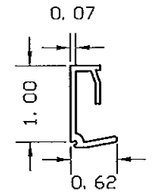

24-13292
GLASS STOP
ALLOY: 6063-T5

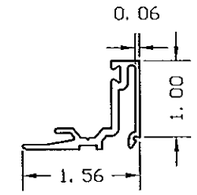

24-13291
GLASS STOP BASE
ALLOY 6063-T5

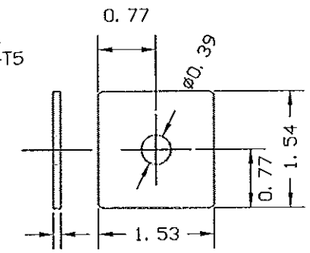

14-9225
TIE ROD BACK-UP PLATE
ANSI 1018 STEEL

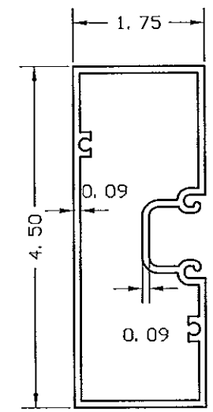

24-9870 - JAMB
ALLOY 6063-T5

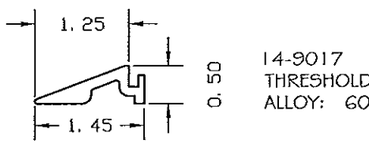

14-9017
THRESHOLD RAMP
ALLOY: 6063-T5

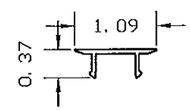

14-9875
POCKET FILLER
ALLOY: 6063-T5

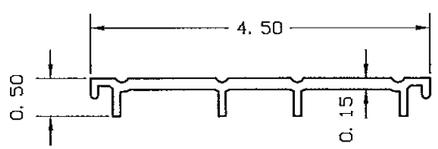

14-13294 - THRESHOLD
GT1175 - FS & FBO THRESHOLD
ALLOY: 6063-T5

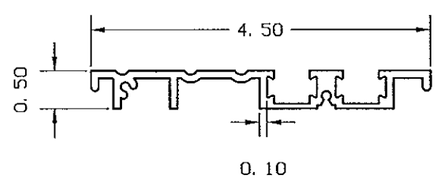

14-9016 - THRESHOLD
GT1175 - FBO
ALLOY: 6063-T5

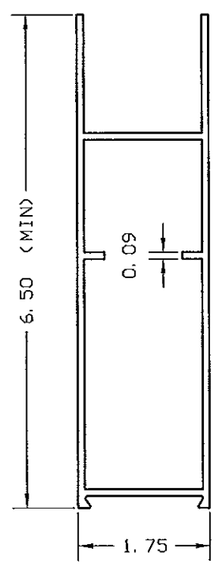

14-9088
SIDELITE TOP & BOTTOM RAIL
DOOR BOTTOM RAIL
ALLOY: 6063-T5

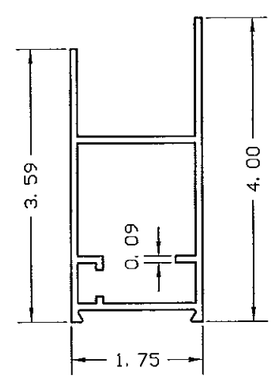

14-9359
DOOR TOP RAIL
ALLOY: 6063-T5

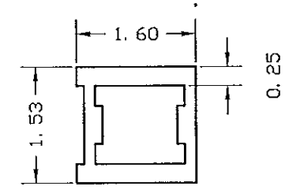

14-13950
ALUMINUM STIFFENER
ALLOY 6063-T5

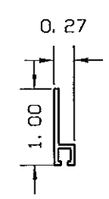

14-5636
BRUSH HOLDER
ALLOY 6063-T5

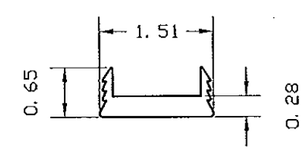

24-2967
RAIL CLIP
ALLOY 6063-T5

THRESHOLD 14-13294 INSTALLED FROM JAMB TO JAMB
ON GT1175-FS (O SX-SX O AND O SX) APPLICATIONS

THRESHOLD 14-13294 INSTALLED ONLY IN THE DOOR OPENING (SX)
ON GT1175-FBO (SO SX-SX SO AND SO SX) APPLICATIONS

THRESHOLD 14-9016 INSTALLED ONLY UNDER THE DOOR FIXED PANELS (SO)
ON GT1175-FBO (SO SX-SX SO AND SO SX) APPLICATIONS

MANUFACTURER:

NABCO

NABCO ENTRANCES INC
S82 W18717 GEMINI DRIVE
MUSKEGO, WISCONSIN 53150
PHONE: (877) 622-2694
FAX: (262) 679-2505

PRODUCT:

SYSTEM GT1175
LARGE & SMALL MISSILE
IMPACT RATED
AUTOMATIC SLIDING GLASS DOOR

ENGINEERING:

ENGCO INC. CA 8116
5595 ORANGE DR. 201
DAVIE, FL. 33314
Tel.: (954) 585-0304
WWW.ENGCOINC.COM

PEDRO M. DE FIGUEIREDO
LICENSE
No 52609
STATE OF FLORIDA
PROFESSIONAL ENGINEER

DEC 06 2013

Engineer Seal
Pedro De Figueiredo - PE 52609

MIAMI-DADE BCCO:

Approved as complying with the Florida Buiding Code
Date 12/22/13
NOA# 13-0521.04
Miami Dade Product Control
By Sheryl L. Chand

DATE: 10/10/2013
SCALE: NA
DESIGN BY: PPMF

SHEET	DRAWING #:
14 OF 21	12-090

DOOR HEADER COMPONENTS

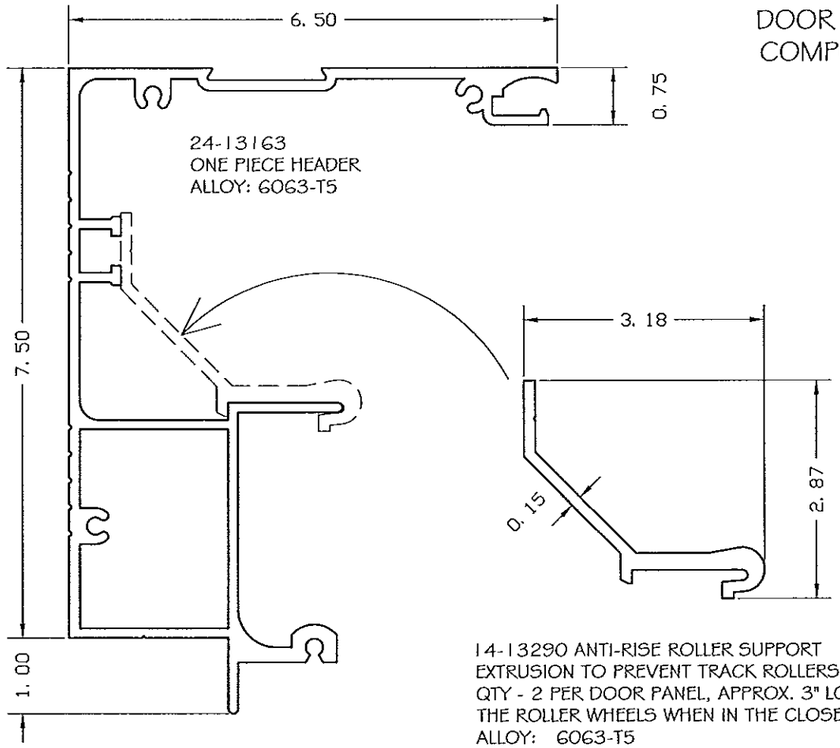

24-13163
ONE PIECE HEADER
ALLOY: 6063-T5

14-13290 ANTI-RISE ROLLER SUPPORT
EXTRUSION TO PREVENT TRACK ROLLERS FROM DERAILING.
QTY - 2 PER DOOR PANEL, APPROX. 3" LONG CENTERED OVER
THE ROLLER WHEELS WHEN IN THE CLOSED POSITION
ALLOY: 6063-T5

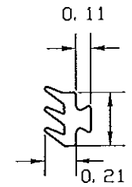

14-13307
INTERIOR GASKET W/ DOVETAIL .150 FC
W/ SILICONE EMULSION

EPDM GLAZING
MANUFACTURER: TRELLEBORG
HARDNESS: 70 SHORE A
TENSILE STRENGTH: 1410 PSI
TEAR STRENGTH: 126 lbf/in
ELONGATION (BREAK) 266%

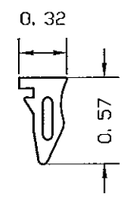

14-14191
EXTERIOR GASKET WEDGE .188 FC
THERMOPLASTIC ELASTOMER

THERMOPLASTIC ELASTOMER GLAZING (W514)
MANUFACTURER: REED RUBBER PRODUCTS
HARDNESS: 66 SHORE A
TENSILE STRENGTH: 798 PSI
TEAR STRENGTH: 166 lbf/in
ELONGATION (BREAK): 320%
SPECIFIC GRAVITY: .97

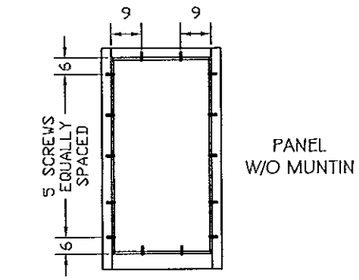

PANEL
W/O MUNTIN

#10X1 FHSMS LAY-OUT

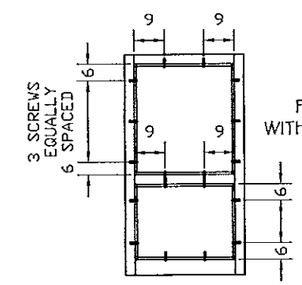

PANEL
WITH MUNTIN

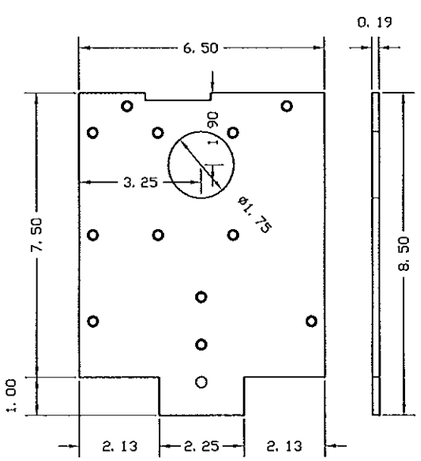

24-13282
ALUMINUM END CAPS
ALLOY 5052-H32

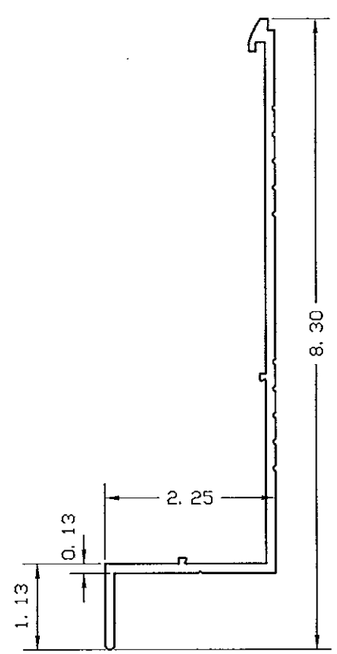

24-9011
HEADER COVER
ALLOY: AA-6063-T5

DRY GLAZING DETAIL

ENTIRE PERIMETER ALL LITES
LARGE & SMALL IMPACT

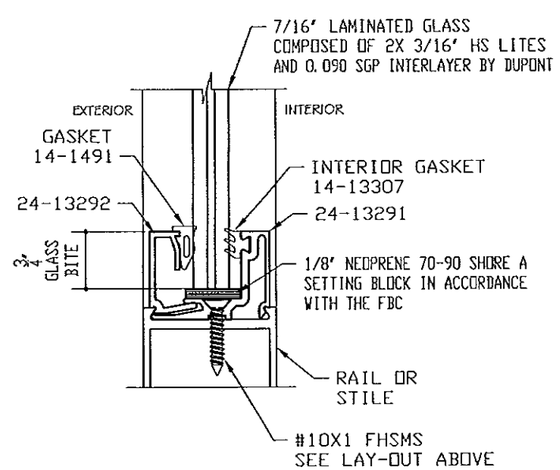

WET GLAZING DETAIL

ENTIRE PERIMETER ALL LITES
LARGE & SMALL IMPACT

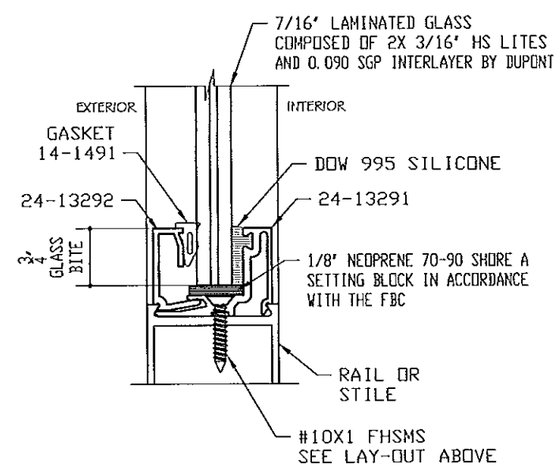

MANUFACTURER:

NABCO

NABCO ENTRANCES INC
S82 W18717 GEMINI DRIVE
MUSKEGO, WISCONSIN 53150
PHONE: (877) 622-2694
FAX: (262) 679-2505

PRODUCT:

SYSTEM GT1 175
LARGE & SMALL MISSILE
IMPACT RATED
AUTOMATIC SLIDING GLASS DOOR

ENGINEERING:

ENGCO INC. CA 8116
5595 ORANGE DR. 201
DAVIE, FL. 33314
Tel.: (954) 585-0304
WWW.ENGCOINC.COM

PEDRO M. DE FIGUEIREDO
LICENSE
No. 52609
STATE OF FLORIDA
PROFESSIONAL ENGINEER

DEC 06 2013

Engineer Seal
Pedro De Figueiredo - PE 52609

MIAMI-DADE BCCO:

Approved as complying with the Florida Building Code
Date 12-26-13
NOAC 13-0521.14
Miami Dade Product Control
By

DATE: 10/10/2013
SCALE: NA
DESIGN BY: PPMF

SHEET	DRAWING #:
15 OF 21	12-090

FBO
PANEL CORNER CONTRUCTION DETAILS

DOOR PANEL INTERLOCK
APPLICABLE FOR I175- FBO ONLY

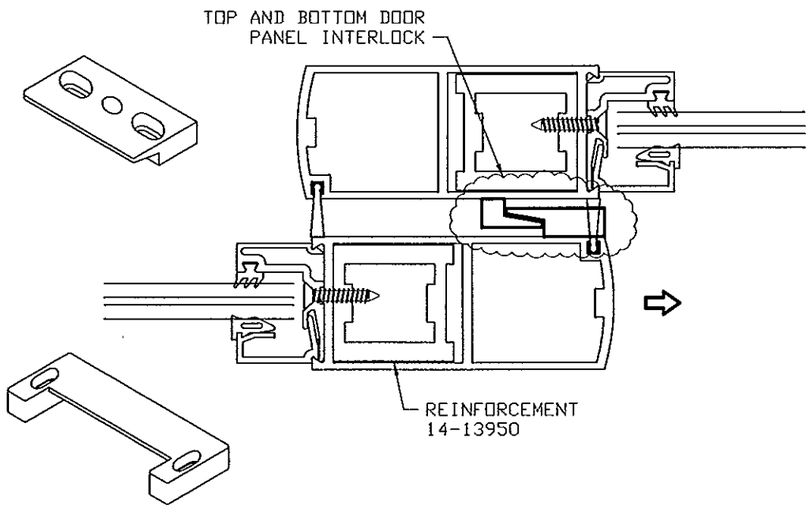

DOOR PANEL INTERLOCK (MALE)
14-14044

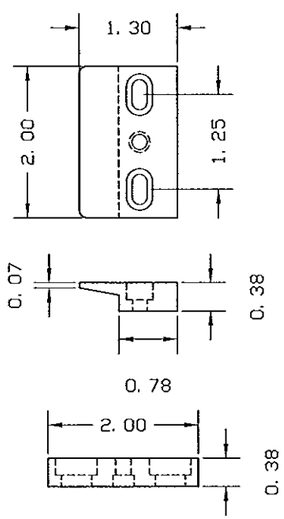

DOOR PANEL INTERLOCK (FEMALE)
24-14043

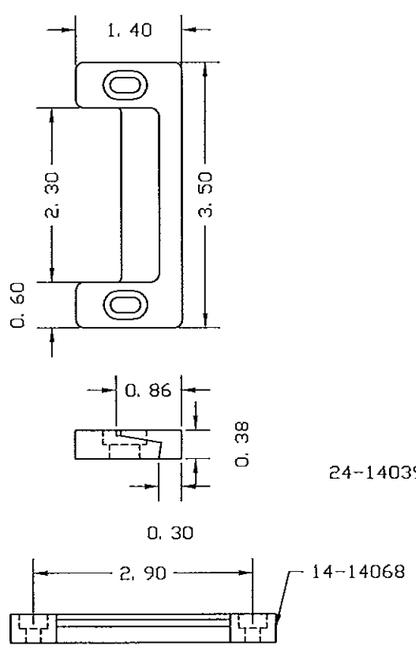

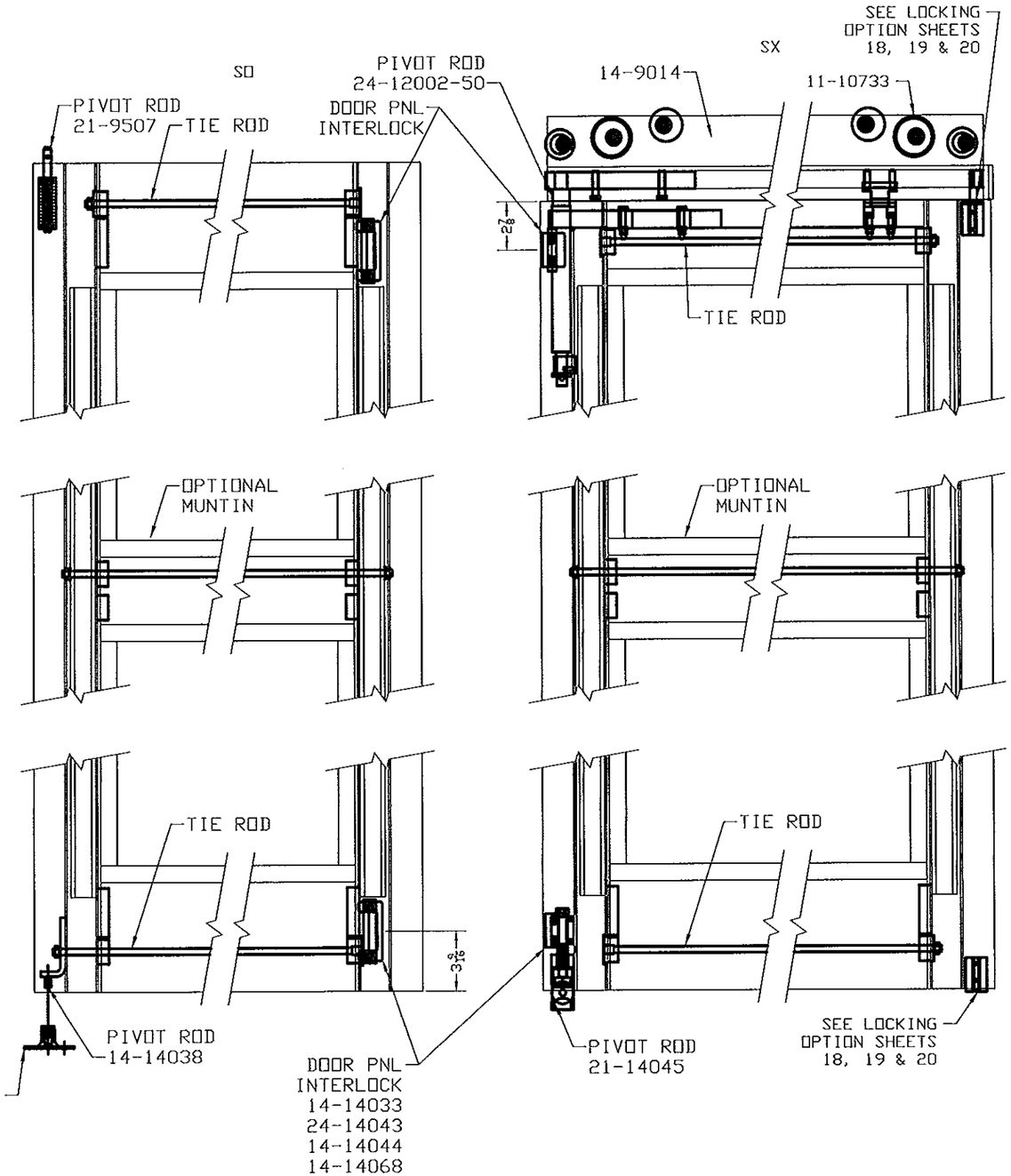

MANUFACTURER:

NABCO

NABCO ENTRANCES INC
S82 W18717 GEMINI DRIVE
MUSKEGO, WISCONSIN 53150
PHONE: (877) 622-2694
FAX: (262) 679-2505

PRODUCT:

SYSTEM GTI175
LARGE & SMALL MISSILE
IMPACT RATED
AUTOMATIC SLIDING GLASS DOOR

ENGINEERING:

ENGCO INC. CA 8116
5595 ORANGE DR. 201
DAVIE, FL. 33314
Tel.: (954) 585-0304
WWW.ENGCOINC.COM

PEDRO M. DE FIGUEIREDO
LICENSE
No. 52609
STATE OF FLORIDA
PROFESSIONAL ENGINEER

DEC 06 2013 Engineer Seal
Pedro De Figueiredo - PE 52609

MIAMI-DADE BCCO:

Approved as complying with the Florida Building Code
Date 12/26/13
NOA# 13-0821.10
Miami Dade Product Control
By

DATE: 10/10/2013
SCALE: NA
DESIGN BY: PPMF

SHEET	DRAWING #:
16 OF 21	12-090

FS
PANEL CORNER CONTRUCTION DETAILS

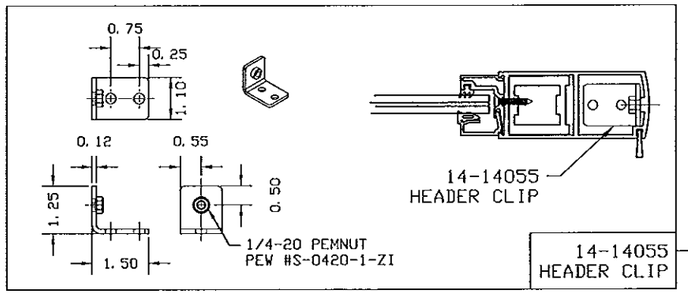

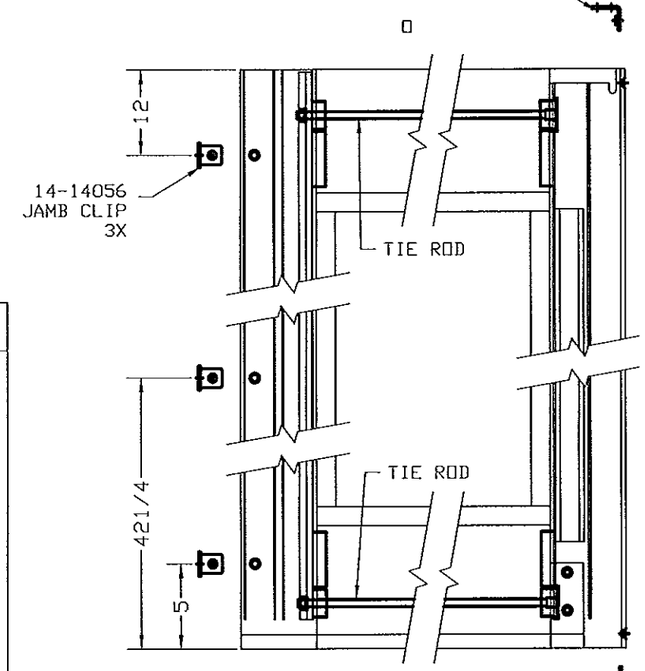

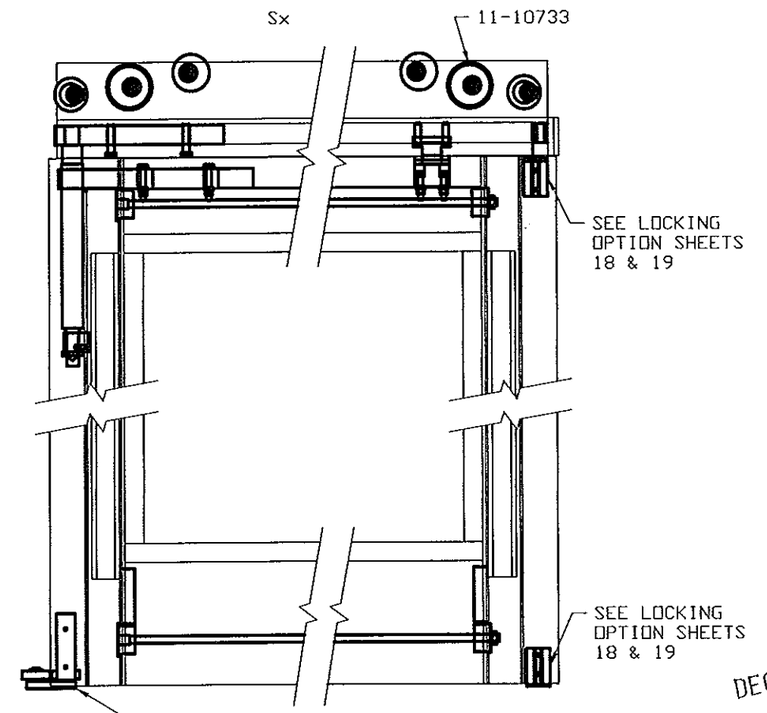

FIXED PANEL ATTACHMENT TO JAMB
APPLICABLE FOR 1175- FS ONLY

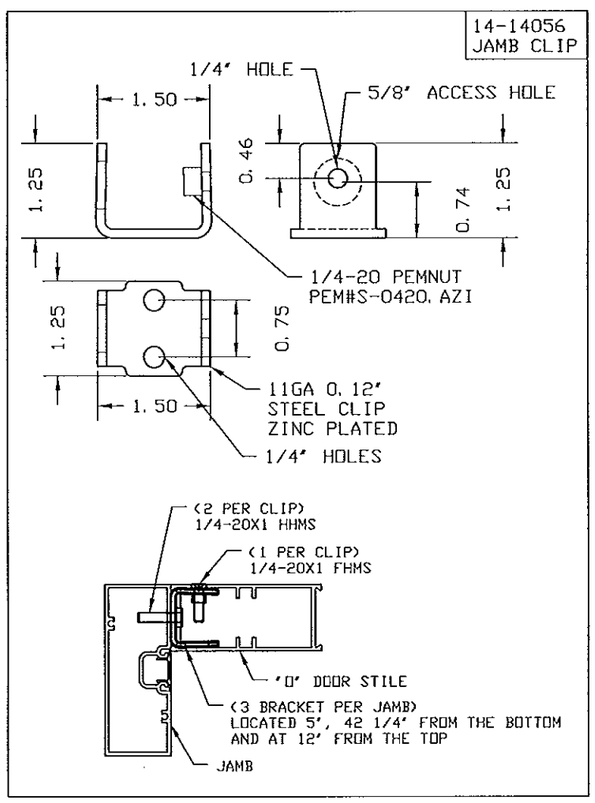

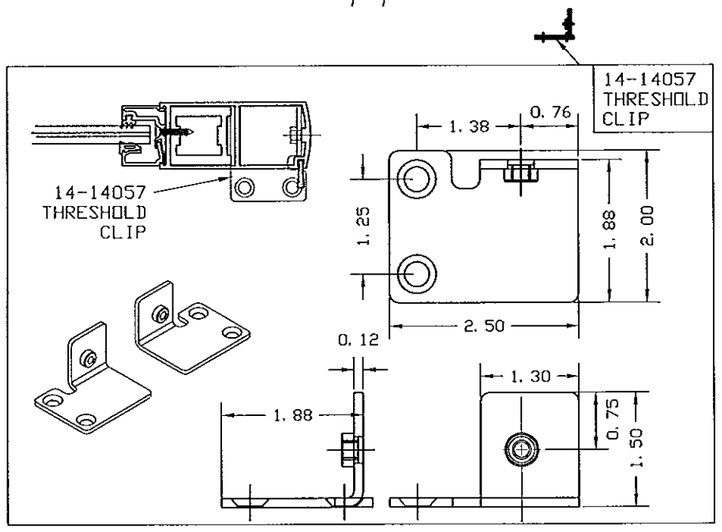

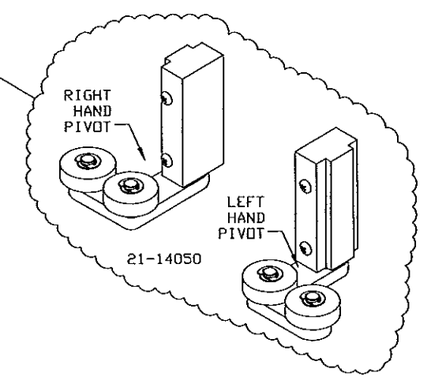

MANUFACTURER:

NABCO

NABCO ENTRANCES INC
S82 W18717 GEMINI DRIVE
MUSKEGO, WISCONSIN 53150
PHONE: (877) 622-2694
FAX: (262) 679-2505

PRODUCT:

SYSTEM GT1175
LARGE & SMALL MISSILE
IMPACT RATED
AUTOMATIC SLIDING GLASS DOOR

ENGINEERING:

ENGCO INC. CA 8116
5595 ORANGE DR. 201
DAVIE, FL. 33314
Tel.: (954) 585-0304
WWW.ENGCOINC.COM

PEDRO M. DE FIGUEIREDO
LICENSE
No. 52609
STATE OF
FLORIDA
PROFESSIONAL ENGINEER

DEC 06 2013

Engineer Seal
Pedro De Figueiredo - PE 52609

MIAMI-DADE BCCO:

Approved as complying with the
Florida Building Code
Date 12/26/13
NOA# 13-0521.14
Miami Dade Product Control
By

DATE: 10/10/2013
SCALE: NA
DESIGN BY: PPMF

SHEET	DRAWING #:
16.1 OF 21	12-090

HOUSING HEADER AND JAMB CONNECTION

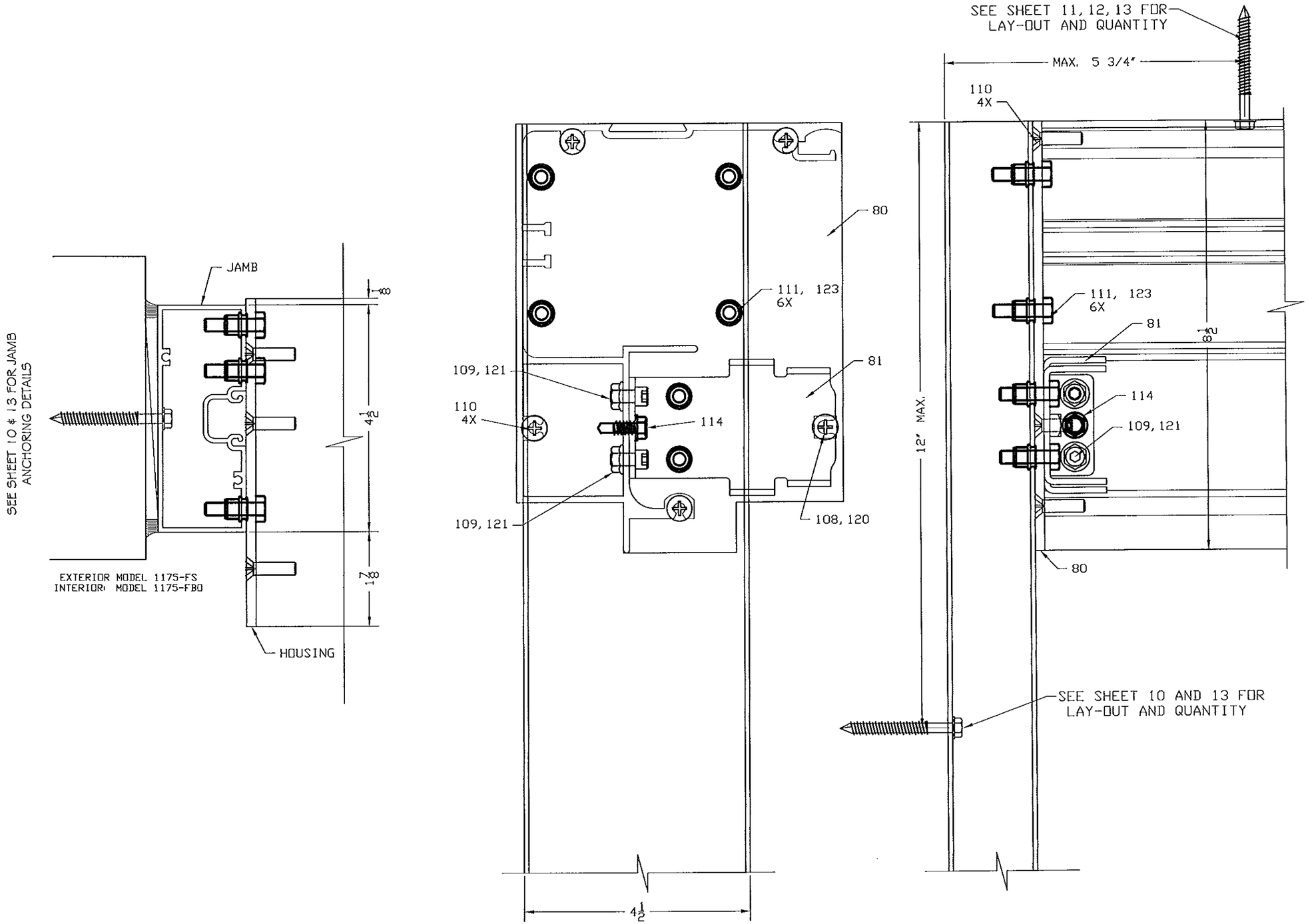

MANUFACTURER:

NABCO

NABCO ENTRANCES INC

S82 W18717 GEMINI DRIVE
MUSKEGO, WISCONSIN 53150
PHONE: (877) 622-2694
FAX: (262) 679-2505

PRODUCT:

SYSTEM GT1175
LARGE & SMALL MISSILE
IMPACT RATED
AUTOMATIC SLIDING GLASS DOOR

ENGINEERING:

ENGCO INC. CA 8116
5595 ORANGE DR. 201
DAVIE, FL. 33314
Tel.: (954) 585-0304
WWW.ENGCOINC.COM

PEDRO M. DE FIGUEIREDO
LICENSE
No. 52609
STATE OF FLORIDA
PROFESSIONAL ENGINEER

DEC 06 2013

Engineer Seal
Pedro De Figueiredo - PE 52609

MIAMI-DADE BCCO:

Approved as complying with the Florida Building Code
Date 12/2/13
NOA# 13-0521.04
Miami Dade Product Control
By

DATE: 10/10/2013
SCALE: NA
DESIGN BY: PPMF

SHEET	DRAWING #:
17 OF 21	12-090

HARDWARE LOCK OPTION 1

3 PT AR MS1850 HOOK LOCK AND
2 PT AR MS 1870 LOCK
WITH TOP AND BOTTOM AR 4015 /4016 RODS (CVR)
INTERIOR THUMBTURN OR AR 4550 HANDLE
2 EXTERNAL KEY CYLINDERS
2 INDICATORS (BELOW THUMBTURN)

TYPICAL LOCK PANEL ELEVATION

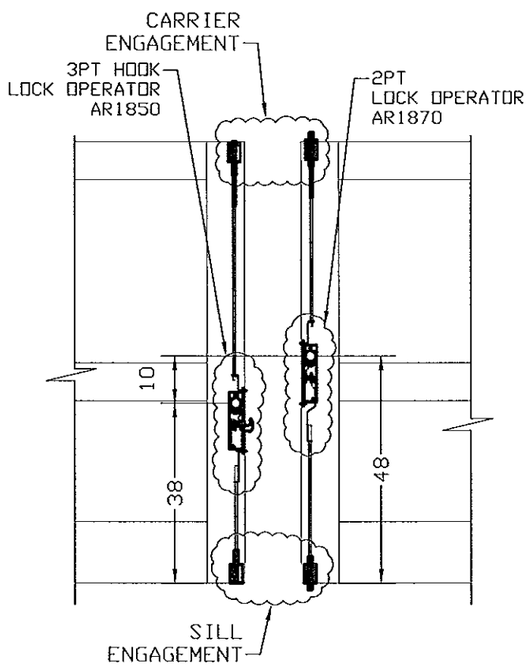

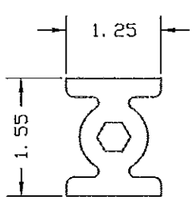

14-13855
LOCKROD GUIDE
ALLOY: 6063-T5

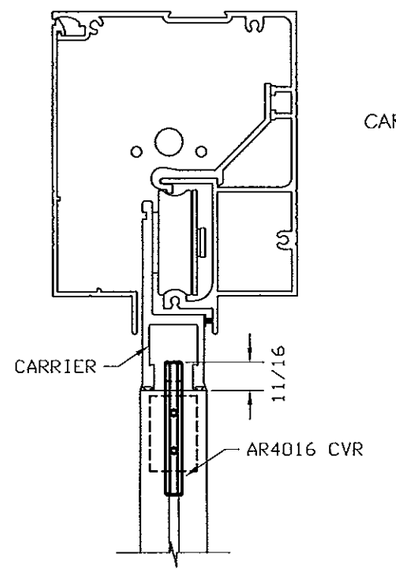

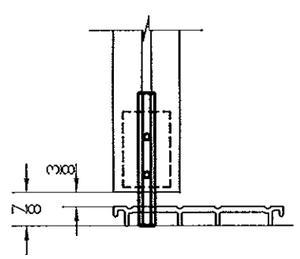

AR 4015 CVR
SILL ENGAGEMENT

AR 4016 CVR CARRIER ENGAGEMENT

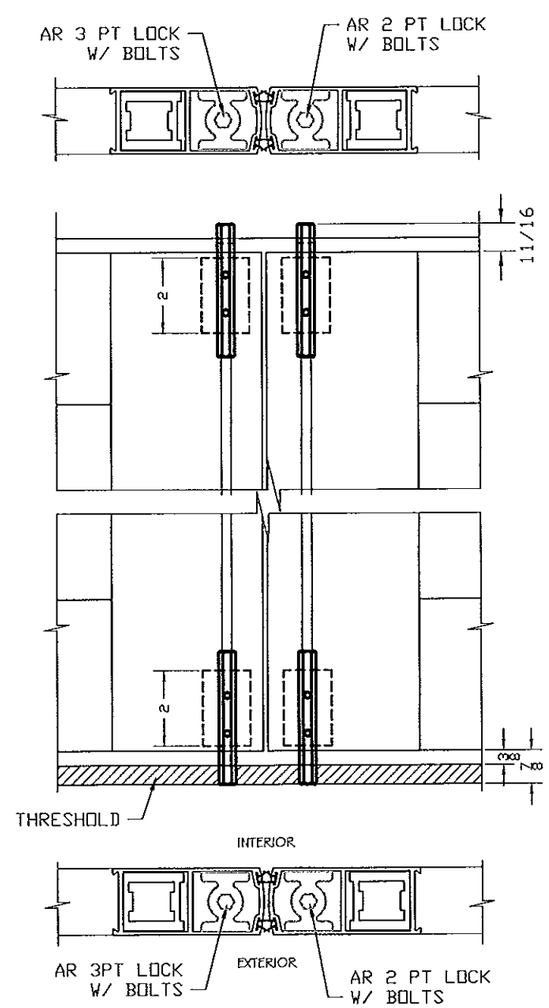

LOCK OPERATOR

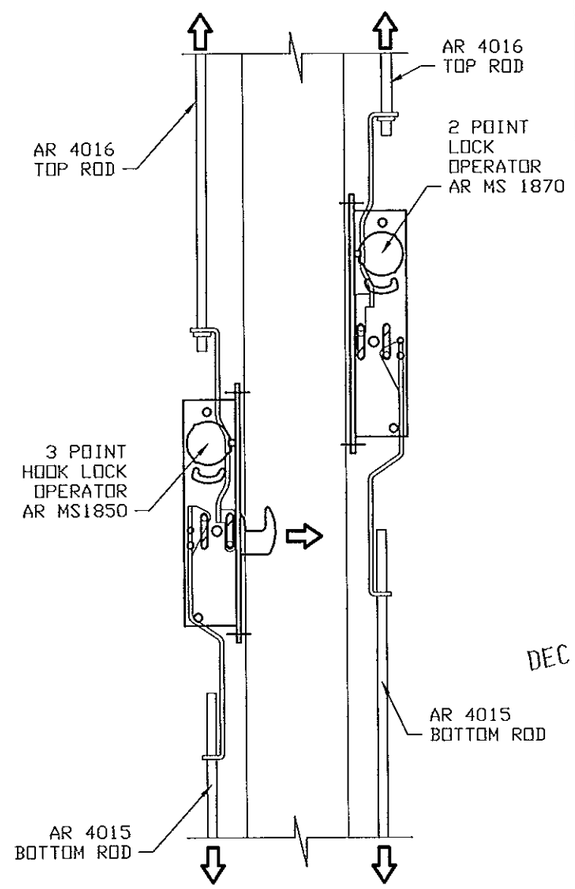

MANUFACTURER:

NABCO

NABCO ENTRANCES INC
S82 W18717 GEMINI DRIVE
MUSKEGO, WISCONSIN 53150
PHONE: (877) 622-2694
FAX: (262) 679-2505

PRODUCT:

SYSTEM GT1175
LARGE & SMALL MISSILE
IMPACT RATED
AUTOMATIC SLIDING GLASS DOOR

ENGINEERING:

ENGCO INC. CA 8116
5595 ORANGE DR. 201
DAVIE, FL. 33314
Tel.: (954) 585-0304
WWW.ENGCOINC.COM

PEDRO M. DE FIGUEIREDO
LICENSE
No. 52609
STATE OF FLORIDA
PROFESSIONAL ENGINEER

DEC 06 2013

Engineer Seal
Pedro De Figueiredo - PE 52609

MIAMI-DADE BCCO:

Approved as complying with the Florida Building Code
Date 12/26/13
NOA# 13-0522.14
Miami Dade Product Control
By

DATE: 10/10/2013
SCALE: NA
DESIGN BY: PPMF

SHEET	DRAWING #:
18 OF 21	12-090

HARDWARE LOCK OPTION 2

(2X) 2 PT AR MS 1870 LOCK
WITH TOP AND BOTTOM AR 4015/ 4016 RODS (CVR)
INTERIOR THUMBTURN OR AR 4550 HANDLE
2 EXTERNAL KEY CYLINDERS
2 INDICATORS (BELOW THUMBTURN)

TYPICAL LOCK PANEL ELEVATION

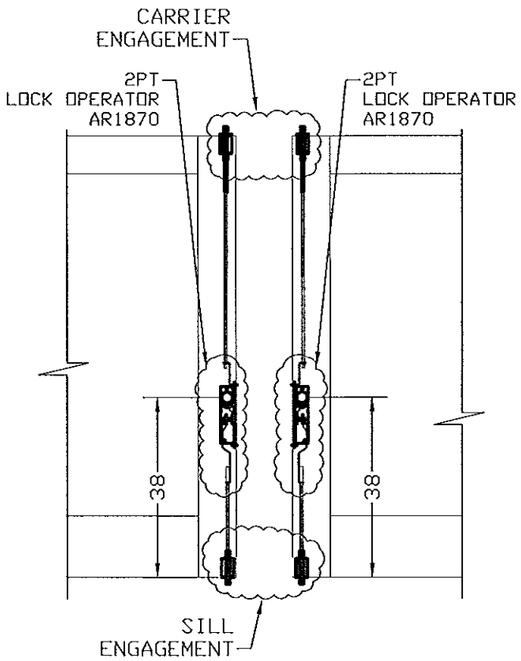

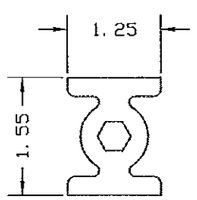

14-13855
LOCKROD GUIDE
ALLOY: 6063-T5

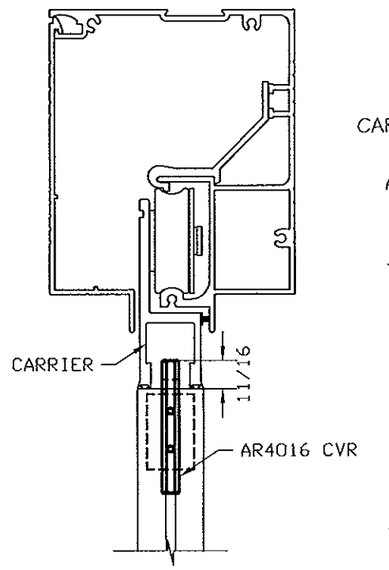

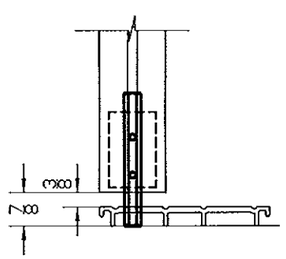

AR 4015 CVR
SILL ENGAGEMENT

AR 4016 CVR
CARRIER ENGAGEMENT

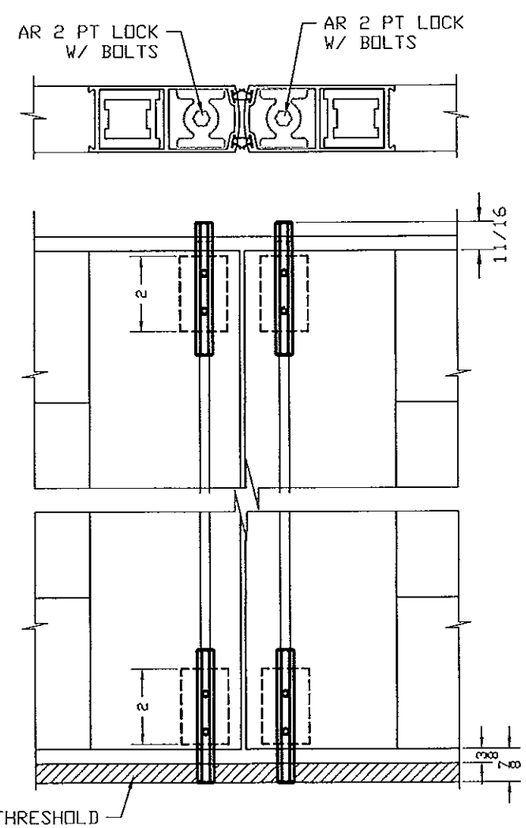

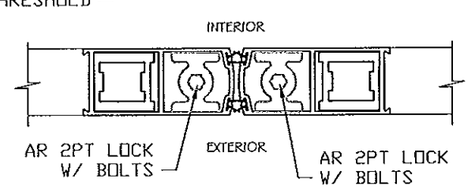

LOCK OPERATOR

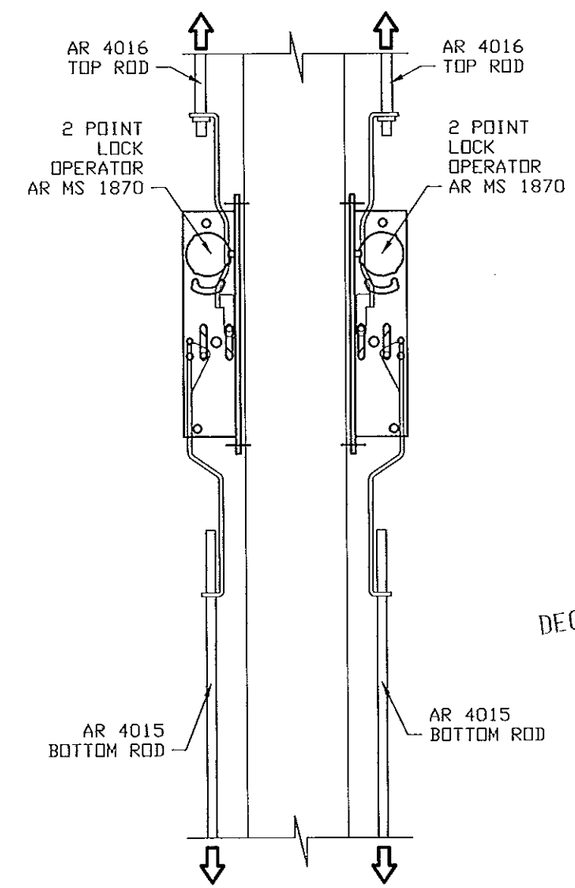

MANUFACTURER:

NABCO

NABCO ENTRANCES INC
S82 W18717 GEMINI DRIVE
MUSKEGO, WISCONSIN 53150
PHONE: (877) 622-2694
FAX: (262) 679-2505

PRODUCT:

SYSTEM GT1175
LARGE & SMALL MISSILE
IMPACT RATED
AUTOMATIC SLIDING GLASS DOOR

ENGINEERING:

ENGCO INC. CA 8116
5595 ORANGE DR. 201
DAVIE, FL. 33314
Tel.: (954) 585-0304
WWW.ENGCOINC.COM

PEDRO M. DE FIGUEIREDO
LICENSE
No. 52609
STATE OF FLORIDA
PROFESSIONAL ENGINEER

DEC 06 2013

Engineer Seal
Pedro De Figueiredo - PE 52609

MIAMI-DADE BCCO:

Approved as complying with the Florida Building Code
Date 12/26/13
NOA# 13-0325.14
Miami Dade Product Control
By

DATE: 10/10/2013
SCALE: NA
DESIGN BY: PPMF

SHEET	DRAWING #:
19 OF 21	12-090

HARDWARE LOCK OPTION 3

(2X) 2 POINTS G86 PANIC DEVICES
2 EXTERNAL KEY CYLINDERS (OPTIONAL)
APPLICABLE ONLY FOR FULL OPEN PANELS (FBO MODEL)
WITH MID HORIZONTAL RAIL

TYPICAL LOCK
PANEL ELEVATION

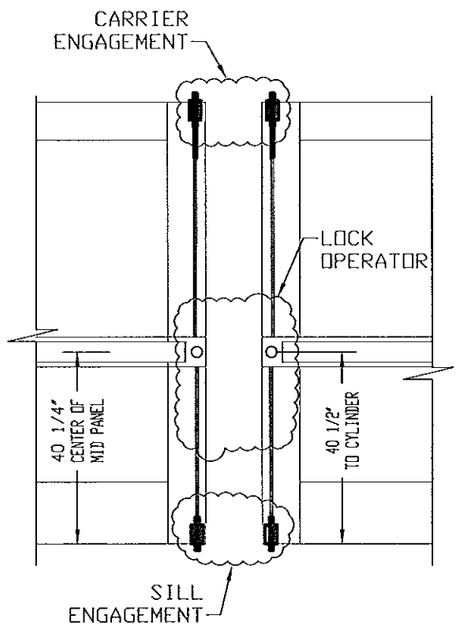

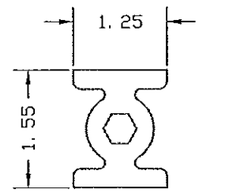

14-13855
LOWER LOCKROD GUIDE
ALLOY: 6063-T5

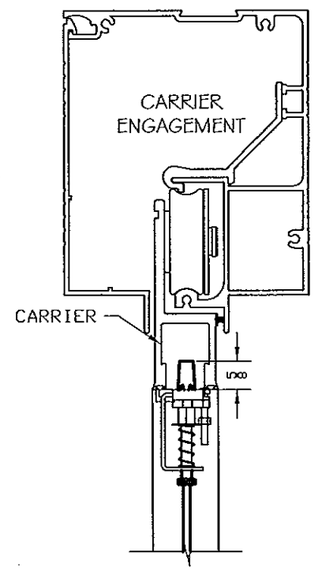

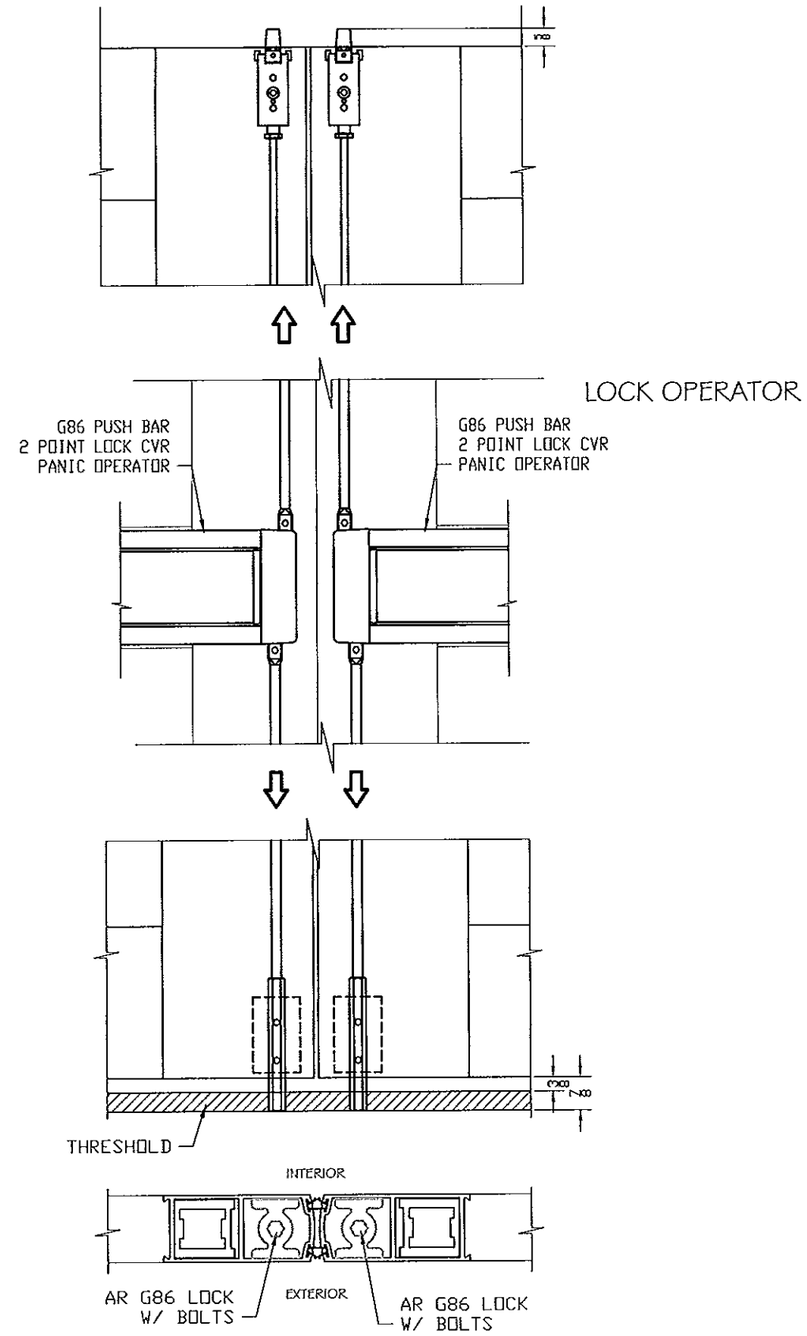

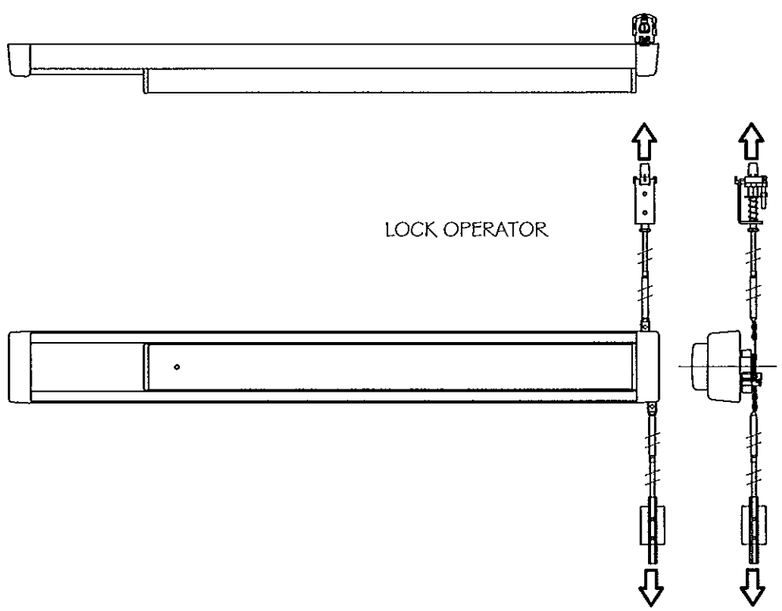

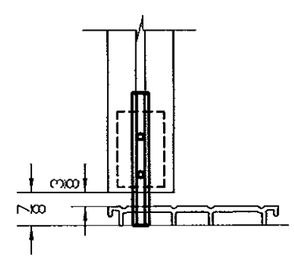

SILL ENGAGEMENT

MANUFACTURER:

NABCO

NABCO ENTRANCES INC
S82 W18717 GEMINI DRIVE
MUSKEGO, WISCONSIN 53150
PHONE: (877) 622-2694
FAX: (262) 679-2505

PRODUCT:

SYSTEM GTI 175
LARGE & SMALL MISSILE
IMPACT RATED
AUTOMATIC SLIDING GLASS DOOR

ENGINEERING:

ENGCO INC. CA 8116
5595 ORANGE DR. 201
DAVIE, FL. 33314
Tel.: (954) 585-0304
WWW.ENGCOINC.COM

PEDRO M. DE FIGUEIREDO
LICENSE
No. 52609
STATE OF
FLORIDA
PROFESSIONAL ENGINEER

DEC 06 2013

Engineer Seal
Pedro De Figueiredo - PE 52609

MIAMI-DADE BCCO:

Approved as complying with the
Florida Building Code
Date 12/26/13
NOA# 13-0527.14
Miami Dade Product Control
By

DATE: 10/10/2013
SCALE: NA
DESIGN BY: PPMF

SHEET	DRAWING #:
20 OF 21	12-090

BILL OF MATERIAL (BOM)

ITEM	PART #	DESCRIPTION
1	24-13163	EXTRUSION, HEADER, 1 PIECE
2	24-9011	EXTRUSION, COVER, HEADER
3	14-13290	EXTRUSION, SUPPORT, ANTI-RISE
4	24-9870	EXTRUSION, JAMB, POCKETED, 1.75 X 4.50
5	14-9875	EXTRUSION, FILLER, POCKETED JAMB
6	14-13294	EXTRUSION, THRESHOLD, FIXED SIDELITE
7	14-9016	EXTRUSION, THRESHOLD, FULL OPEN
8	14-9017	EXTRUSION, THRESHOLD, RAMP
9	14-13288	EXTRUSION, STILE, 4", SINGLE WEATHERING
10	14-13289	EXTRUSION, STILE, 4", DOUBLE WEATHERING
11	14-13950	EXTRUSION, STIFFENER, STILE
12	14-9359	EXTRUSION, RAIL, 4", TOP
13	24-0328	EXTRUSION, MUNTIN, 4"
14	14-9088	EXTRUSION, RAIL, 6.5"
15	14-5636	EXTRUSION, BRUSH HOLDER
16	24-2967	EXTRUSION, RAIL CLIP
17	14-13855	EXTRUSION, LOCKROD
18	14-9014	EXTRUSION, HANGER
19	14-9015	EXTRUSION, INTERFACE LEG
20	14-13295	EXTRUSION, ENDCAP
21	24-13291	EXTRUSION, GLASS STOP, BASE, HURRICANE
22	24-13292	EXTRUSION, GLASS STOP, TOP, IMPACT GLASS, HURRICANE
30	14-2279-04	PILE, FELT, .25" TALL, .187 WIDE
31	14-2279-05	PILE, FELT, .25" TALL, .270 WIDE W/ ADHESIVE
32	14-8326-05	PILE, FELT, .37" TALL, .270 WIDE
33	14-2279-09	PILE, FELT, .45" TALL, .270 WIDE
34	14-4899-60	BRUSH, NYLON, .73" TALL
35	14-4899-100	BRUSH, NYLON, 1.00" TALL
36	14-3933-02	GASKET, VINYL, 1.00" TALL
37	14-8161	TAPE, FOAM, .25 X .50
38	14-14191	GASKET, WEDGE, .187 FACE CLEARANCE
39	14-13307	GASKET, GLAZING, .150 FACE CLEARANCE
40		ADHESIVE, SILICONE, DOW #995
45	14-9279	T-NUT, TIE ROD
46	14-9225	PLATE, BACKING, TIE ROD
47	14-3624	TIE ROD, 3/8"-16
48	14-0984	CLIP, RAIL, TIE ROD
49	14-14192	CLIP, RAIL, 2.9" LONG
50	24-12002-50	ASM, CARRIER BAR, MEDIUM STILE HURRICANE
51	21-14040	ASM, RETAINER, CARRIER, ECCENTRIC
52	11-10733	ASM, ROLLER, HANGER, 1175
53	21-14035	ASM, ANTI-RISE, HURRICANE
54	24-9483	BLOCK, PANIC CATCH, CARRIER
55	24-9485	BLOCK, PANIC CATCH, TOP RAIL
56	21-14030	ASM, ENDCAP, CARRIER
57	14-14060	BLOCK, GUIDE, LOCKROD
58	14-14062	LOCKROD, 1/4"-20
59	14-14064	LOCKROD, #12-24
60	21-9507	ASM, TOP PIVOT, SWING PANEL
61	14-14038	PIVOT, BOTTOM, SWING PANEL
62	24-14039	PIVOT, FLOOR, SWING PANEL

ITEM	PART #	DESCRIPTION
63	24-2458	BUSHING, BOTTOM PIVOT, SWING PANEL
64	24-14043	INTERLOCK, FEMALE
65	14-14068	BAR, NUT, FEMALE INTERLOCK
66	14-14044	INTERLOCK, MALE
67	14-14033	BAR, NUT, MALE INTERLOCK
68	21-14045	ASM, BOTTOM GUIDE, FULL OPEN
70	14-14055	BRACKET, HEADER, FIXED SIDELITE
71	14-14056	BRACKET, JAMB TUBE, FIXED SIDELITE
72	14-14057	BRACKET, THRESHOLD, FIXED SIDELITE
73	14-14053	PLATE, COVER, FIXED SIDELITE
74	14-14054	PLATE, NUT
75	21-14050	ASM, DOUBLE WHEEL ROLLER, HURRICANE
80	24-13282	ENDCAP, ONE PIECE HEADER
81	24-9022	BRACKET, HEADER, 1175
90	24-0564	LOCK, 3PT, ADAMS RITE MS1850S
91	14-2046	LOCK, 2 PT, ADAMS RITE 1870
92	24-14072	LOCK, PANIC, ADAMS RITE #G86-11-36
93	22-0090	CYLINDER, THUMBTURN
94	22-4495	CYLINDER, KEY
95	12-1400	INDICATOR, EXIT, ADAMS RITE #4089
96	14-14073	KIT, ESCUTCHEON, ADAMS RITE #8651-X-XXX
97	22-10256	ADAMS RITE 4016 TOP ROD CVR
98	22-4412	ADAMS RITE 4015 BOTTOM ROD CVR
100	24-0011-72	SCREW, #10-24 X .38 LONG, FHMS, UNDERCUT
101	24-0011-53	SCREW, #10-32 X .50 LONG, FHMS
102	24-0011-131	SCREW, #10-32 X .50 LONG, FHMS, UNDERCUT
103	24-0012-14	SCREW, #10-32 X .50 LONG, PHMS
104	24-0010-62	SCREW, #10-32 X .63 LONG, SHCS
105	24-0031-24	SCREW, #10 X 1.00 LONG, FHSMS
106	24-0011-70	SCREW, 1/4"-20 X .44 LONG, FHMS, UNDERCUT
107	24-0011-144	SCREW, 1/4"-20 X .63 LONG, FHCS
108	24-0011-13	SCREW, 1/4"-20 X .75 LONG, FHMS
109	24-0010-09	SCREW, 1/4"-20 X .75 LONG, SHCS
110	24-4941-02	SCREW, 1/4"-20 X 1.00 LONG, FHMS, TRI-LOBE
111	24-0014-01	SCREW, 1/4"-20 X 1.00 LONG, HHCS
112	24-0010-16	SCREW, 1/4"-20 X 1.25 LONG, SHCS
113	24-0014-12	SCREW, 1/4"-20 X 1.75 LONG, HHCS
114	24-0014-30	SCREW, 1/4" X .75 LONG, TEKS
116	24-0014-27	SCREW, 3/8"-16 X .75 LONG, HHCS
117	24-0010-43	SCREW, 3/8"-16 X 1.50 LONG, SHCS, LOW HEAD
118	24-0016-20	SETSCREW, 5/16"-18 X .75 LONG
119	24-0016-30	SETSCREW, 5/16"-18 X 1.25 LONG
120	24-0021-27	NUT, 1/4"-20, SQUARE
121	24-0021-35	NUT, 1/4"-20, WHIZLOCK
122	24-0021-21	NUT, 3/8"-16, WHIZLOCK
123	14-8640-01	RIVNUT, 1/4"-20
124	24-0017-46	WASHER, FLAT, 1/4"

ITEMS #23, 24-29, 41-44, 69, 76-79, 82-89, 99 AND 115 ARE NOT USED IN THE BOM

MANUFACTURER:

NABCO

NABCO ENTRANCES INC
S82 W18717 GEMINI DRIVE
MUSKEGO, WISCONSIN 53150
PHONE: (877) 622-2694
FAX: (262) 679-2505

PRODUCT:

SYSTEM GT1175
LARGE & SMALL MISSILE
IMPACT RATED
AUTOMATIC SLIDING GLASS DOOR

ENGINEERING:

ENGCO INC. CA 8116
5595 ORANGE DR. 201
DAVIE, FL. 33314
Tel.: (954) 585-0304
WWW.ENGCOINC.COM

PEDRO M. DE FIGUEIREDO
LICENSE
No. 52609
STATE OF FLORIDA
PROFESSIONAL ENGINEER

DEC 06 2013

Engineer Seal
Pedro De Figueiredo - PE 52609

MIAMI-DADE BCCO:

Approved as complying with the Florida Building Code
Date DEC 26 2013
NOAC 12-1221.10
Miami Dade Product Control
By

DATE: 10/10/2013
SCALE: NA
DESIGN BY: PPMF

SHEET	DRAWING #:
21 OF 21	12-090