MIAMI-DADE COUNTY
PRODUCT CONTROL SECTION
11805 SW 26 Street, Room 208
Miami, Florida 33175-2474
T (786) 315-2590 F (786) 315-2599
www.miamidade.gov/economy

DEPARTMENT OF REGULATORY AND ECONOMIC RESOURCES (RER)
BOARD AND CODE ADMINISTRATION DIVISION

NOTICE OF ACCEPTANCE (NOA)

Stanley Access Technologies, LLC
65 Scott Swamp Road
Farmington, CT 06032

SCOPE:

This NOA is being issued under the applicable rules and regulations governing the use of construction materials. The documentation submitted has been reviewed and accepted by Miami-Dade County RER -Product Control Section to be used in Miami Dade County and other areas where allowed by the Authority Having Jurisdiction (AHJ).

This NOA shall not be valid after the expiration date stated below. The Miami-Dade County Product Control Section (In Miami Dade County) and/or the AHJ (in areas other than Miami Dade County) reserve the right to have this product or material tested for quality assurance purposes. If this product or material fails to perform in the accepted manner, the manufacturer will incur the expense of such testing and the AHJ may immediately revoke, modify, or suspend the use of such product or material within their jurisdiction. RER reserves the right to revoke this acceptance, if it is determined by Miami-Dade County Product Control Section that this product or material fails to meet the requirements of the applicable building code.

This product is approved as described herein, and has been designed to comply with the Florida Building Code, including the High Velocity Hurricane Zone.

DESCRIPTION: Series "Dura Storm" Aluminum Automatic Sliding Glass Door : O-Sx-Sx-O, Sx-O w/ wo Transom, So-Sx-Sx-So and Sx-So w/wo Transom & Breakout –NI

APPROVAL DOCUMENT: Drawing No. **12-SAT-15**, titled "Dura-Storm 2000/3000 Bi-Parting /Single slide-NI", sheets 1 through 19 of 19, prepared by Engineering Express, dated 07-01-12 and last revised on 10/22/2013, signed and sealed by Frank L. Bennardo, P.E., bearing the Miami-Dade County Product Control Revision stamp with the Notice of Acceptance number and expiration date by the Miami-Dade County Product Control Section.

MISSILE IMPACT RATING: None. Approved Hurricane Protection devices are required per FBC, as applicable.

LIMITATIONS:

1. See elevation for anchors requirements in sheets **1, 2** & **3** and Header clusters details in sheet **7** and Threshold clusters in sheet **12**. See sheets **4, 5** & **6** for concealed 3-point locking (active panel) & 2-point (in-active). Also see applicable 2-point **G-86** CVR panic devices (active/inactive panels) for series **3000** in sheets **5** & **6** to be used w/ Horizontal muntin bars (detail V, sheet 15) and DLO height not to exceed 36-3/4" max.
2. See details **1A/8, 3A/9** & **5A/10** for Transom nested reinforcements item **#101** for Bi-Parting series 2000 (O-Sx-Sx-O) and series 3000 (So-Sx-Sx-So). Single Slide O-Sx and So-Sx require light reinforcement item **#73**.
3. Electrical devices, functions and installation is not part of this approval and to be reviewed and approved by Authority Having Jurisdiction (AHJ)
4. See Door panel and Transom glazing details in sheets 16 & 18. Fixed glass more than 36" wide must be supported with approved setting blocks per FBC requirements.
5. Not approved where water infiltration is required.

LABELING: Each unit shall bear a permanent label with the manufacturer's name or logo, city, state and series and following statement: "Miami-Dade County Product Control Approved", noted herein.

RENEWAL of this NOA shall be considered after a renewal application has been filed and there has been no change in the applicable building code negatively affecting the performance of this product.

TERMINATION of this NOA will occur after the expiration date or if there has been a revision or change in the materials, use, and/or manufacture of the product or process. Misuse of this NOA as an endorsement of any product, for sales, advertising or any other purposes shall automatically terminate this NOA. Failure to comply with any section of this NOA shall be cause for termination and removal of NOA

MIAMI-DADE COUNTY APPROVED

10/25/13

INSPECTION: A copy of this entire NOA shall be provided to the user by the manufacturer or its distributors and shall be available for inspection at the job site at the request of the Building Official.

This NOA **revises** NOA **#12-0807.05** of the pages 1 & 2 and evidence page E-1, as well as approval document mentioned above.

The submitted documentation was reviewed by **Ishaq I. Chanda, P.E.**

MIAMI-DADE COUNTY APPROVED

10/23/13

NOTICE OF ACCEPTANCE: EVIDENCE SUBMITTED

A. DRAWINGS

1. Manufacturer's die drawings and sections (submitted under file # **12-0807.05**)
2. Drawing No. **12-SAT-15**, titled "Dura-Storm 2000/3000 Bi-Parting /Single slide-NI", sheets 1 through 19 of 19, prepared by Engineering Express, dated 07-01-12 and last revised on 10/22/2013, signed and sealed by Frank L. Bennardo, P.E.

B. TESTS

1. Test reports on: 1) Air Infiltration Test, per FBC, TAS 202-94
   2) Uniform Static Air Pressure Test, Loading per FBC TAS 202-94
   3) Water Resistance Test, per FBC, TAS 202-94 (Not conducted)
   4) Forced Entry Test, per FBC 2411 3.2.1, TAS 202-94

   Along with installation diagram of aluminum automatic entrance doors Sx-So w/ G-86 CVR Panic and So-Sx-Sx-So w/ Transom & G-86 CVR Panic, prepared by Fenestration Testing Laboratory, Inc. Test Report No. **FTL-7247,** dated 03/08/13, signed and sealed by Marlin D. Brinson, P. E.
2. Test reports on: 1) Air Infiltration Test, per FBC, TAS 202-94
   2) Uniform Static Air Pressure Test, Loading per FBC TAS 202-94
   3) Water Resistance Test, per FBC, TAS 202-94 (Not conducted)
   4) Forced Entry Test, per FBC 2411 3.2.1, TAS 202-94

   Along with installation diagram of aluminum automatic entrance doors, prepared by Fenestration Testing Laboratory, Inc. Test Report No. **FTL-6803,** dated 05/11/12 and last revised on 03/21/13, signed and sealed by Marlin D. Brinson, P. E.
   Note: This test report has been revised by an addendum letters dated Nov 21, 2012 and April 03, 2013, issued by Fenestration Testing Lab, signed and sealed by Marlin D. Brinson, P. E. (submitted under file # **12-0807.05)**

C. CALCULATIONS (submitted under file # **12-0807.05**)

1. Anchor verification calculations and structural analysis, complying with FBC-2010, prepared by Engineering Express, dated 08-02-12, signed and sealed by Frank L. Bennardo, P.E.
2. Glazing complies w/ ASTME-1300-02 & -04.

D. QUALITY ASSURANCE

1. Miami Dade Department of Regulatory and Economic Resources (RER).

E. MATERIAL CERTIFICATIONS (submitted under file # **12-0807.05**)

1. Technical strength data of Trelleborg EPDM per ASTM C864.

F. STATEMENTS

1. Statement letter of conformance to FBC 2010, prepared by Engineering Express, dated May 17, 2013, signed and sealed by Frank L. Bennardo, P.E.
2. Statement letter of conformance and letter of no financial interest, prepared by Engineering Express, dated 08-02-12, signed and sealed by Frank L. Bennardo, P.E. (submitted under file # **12-0807.05)**
3. Lab compliance as part of the above referenced test report.

G. OTHER

1. This NOA **revises** NOA **#12-0807.05**, expiring 04/18/18.
2. Test proposals # 13-0006 dated 01/14/13 approved by RER and # 11-1016, dated NOV 11, 2011 approved by PERA.
3. Manufacture supplied Adam Rites deadbolt/hook & bolts mechanism & G-86 panic brochures.

Ishaq I. Chanda, P.E.
Product Control Examiner
NOA No. 13-0529.21
Expiration Date: April 11, 2018
Approval Date: October 31, 2013

DURA-STORM SERIES 2000/3000, TYPICAL ELEVATIONS

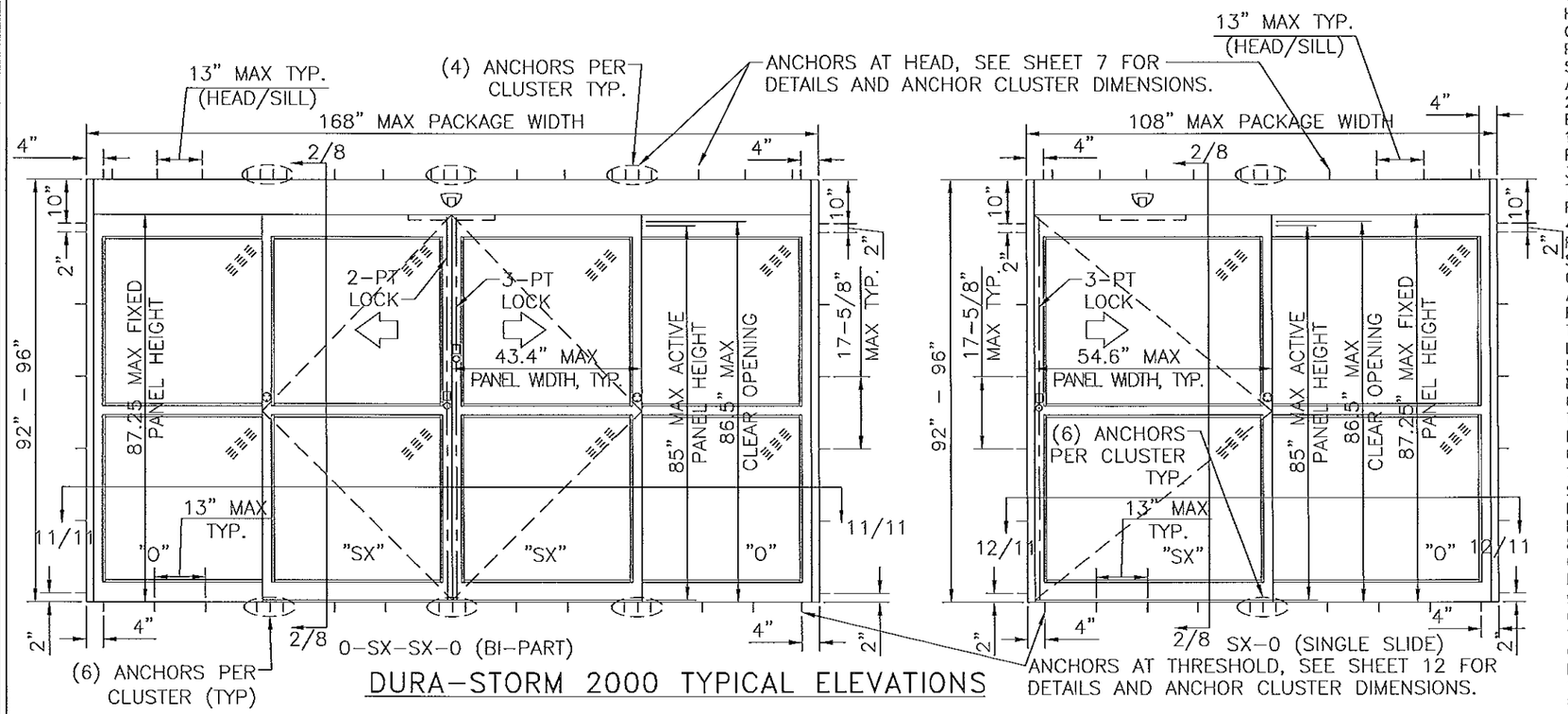

DURA-STORM 2000 TYPICAL ELEVATIONS

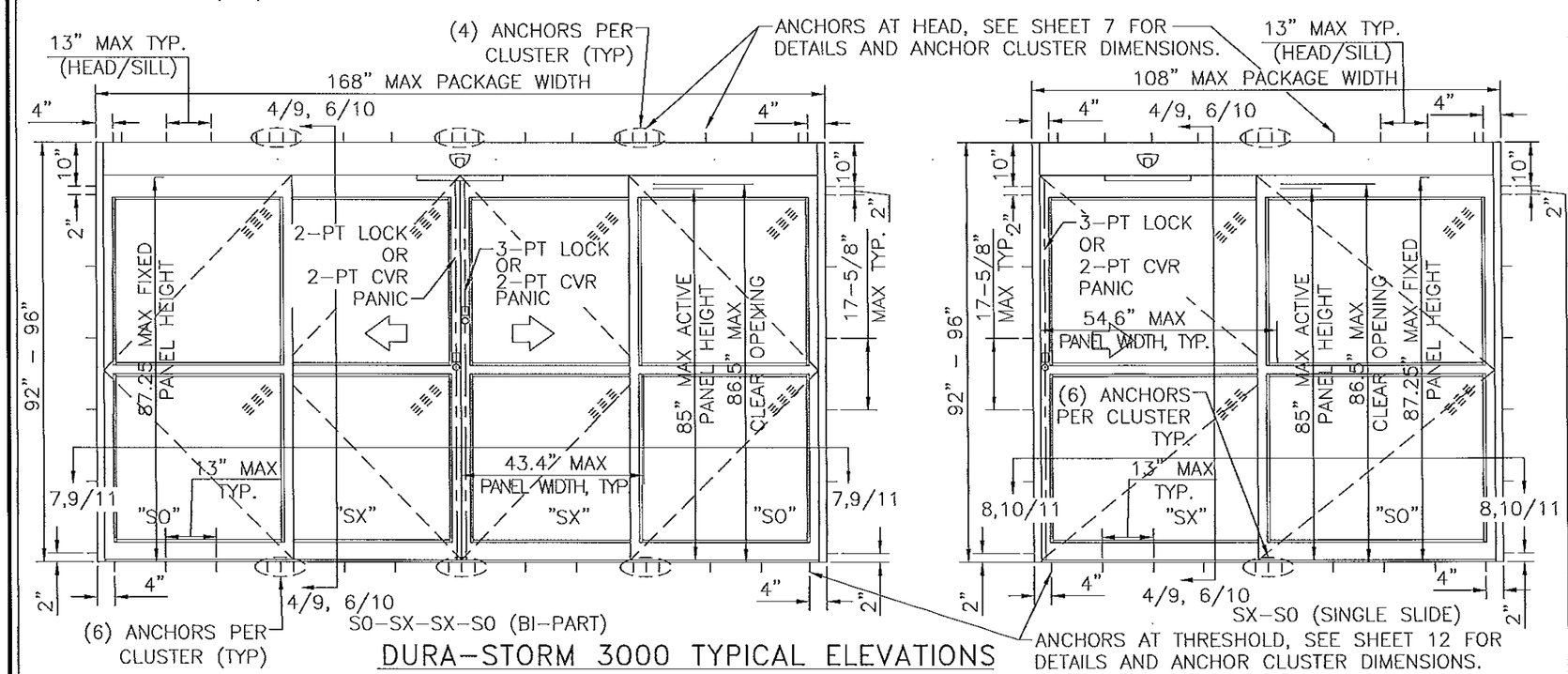

DURA-STORM 3000 TYPICAL ELEVATIONS

GENERAL NOTES

1. DOORS HAVE BEEN TESTED & DESIGNED IN ACCORDANCE WITH THE REQUIREMENTS OF THE 2010 FLORIDA BUILDING CODE, HIGH VELOCITY HURRICANE ZONE (HVHZ) AND MIAMI-DADE COUNTY PROTOCOLS TAS 202 FOR UNIFORM STATIC AIR PRESSURE AS A NON-IMPACT RESISTANT SYSTEM. APPROVED SHUTTERS, COMPLYING WITH FBC REQUIREMENTS, ARE REQUIRED AS APPLICABLE.
2. PERMIT HOLDER SHALL VERIFY THE ADEQUACY OF THE EXISTING STRUCTURE TO WITHSTAND ADDITIONAL IMPOSED LOADS. 1X OR 2X WOOD BUCKS BY OTHERS SHALL BE ANCHORED PROPERLY TO TRANSFER LOADS TO THE EXISTING STRUCTURE.
3. NO INCREASE IN ALLOWABLE STRESS HAS BEEN USED IN THE DESIGN OF THESE PRODUCTS. WIND LOAD DURATION FACTOR Cd = 1.6 WAS USED FOR WOOD ANCHOR DESIGN.
4. POSITIVE AND NEGATIVE DESIGN PRESSURES CALCULATED FOR USE WITH THIS SYSTEM SHALL BE DETERMINED PER SEPARATE ENGINEERING IN ACCORDANCE WITH THE GOVERNING CODE. PRESSURE REQUIREMENTS AS DETERMINED IN ACCORDANCE WITH ASCE 7 AND CHAPTER 1609 OF THE FLORIDA BUILDING CODE SHALL BE LESS THAN OR EQUAL TO THE POSITIVE OR NEGATIVE DESIGN PRESSURE CAPACITY VALUES LISTED HEREIN FOR ANY ASSEMBLY AS SHOWN.
5. DESIGN PRESSURES NOTED HEREIN ARE BASED ON MAXIMUM TESTED PRESSURES DIVIDED BY A 1.5 SAFETY FACTOR.
6. DOORS DETAILED HEREIN HAVE BEEN DESIGNED AND TESTED TO THE MAXIMUM SPANS AND LOADS SHOWN ON THESE DRAWINGS REFERENCE FENESTRATION TESTING LAB REPORTS 6803 & 7247.
7. ANCHORS SHALL BE INSTALLED PER MANUFACTURER'S SPECIFICATIONS, SPACED AS NOTED HEREIN. MINIMUM EMBEDMENT AND EDGE DISTANCE EXCLUDES STUCCO, FOAM, BRICK, AND OTHER WALL FINISHES.
8. WHERE EXISTING STRUCTURE IS WOOD FRAMING, EXISTING CONDITIONS MAY VARY. FIELD VERIFY THAT FASTENERS ARE INTO ADEQUATE WOOD FRAMING MEMBERS, NOT INTO PLYWOOD.
9. WOOD HOST STRUCTURE SHALL BE "SOUTHERN PINE" G=0.55 OR GREATER DENSITY.
10. WHERE EXISTING STRUCTURE IS WOOD FRAMING, EXISTING CONDITIONS MAY VARY. FIELD VERIFY THAT FASTENERS ARE INTO ADEQUATE WOOD FRAMING MEMBERS, NOT INTO PLYWOOD.
11. THE SYSTEM DETAILED HEREIN IS GENERIC AND DOES NOT PROVIDE INFORMATION FOR A SPECIFIC SITE. FOR SITE CONDITIONS DIFFERENT FROM THE CONDITIONS DETAILED HEREIN, A LICENSED ENGINEER OR REGISTERED ARCHITECT SHALL PREPARE SITE SPECIFIC DOCUMENTS FOR USE IN CONJUNCTION WITH THIS DOCUMENT FOR INSTALLATIONS OUTSIDE THE HVHZ; WITHIN THE HVHZ, A ONE-TIME APPROVAL FROM MIAMI-DADE COUNTY SHALL BE OBTAINED.
12. ALL BOLTS AND WASHERS SHALL BE ZINC COATED, GALVANIZED, OR STAINLESS STEEL WITH A MINIMUM TENSILE STRENGTH OF 60 KSI, EXCEPT INSTALLATION ANCHORS.
13. ALL SINGLE SLIDE ENTRANCES ARE SHOWN "RIGHT HAND"; "LEFT HAND" IS MIRROR IMAGE.

SYSTEM NOTES

1. ALL ALUMINUM PARTS SHALL BE 6063-T6 ALUMINUM ALLOY AND TEMPER, UNLESS OTHERWISE NOTED.
2. GLAZING NOT IMPACT RATED. SEE GLAZING DETAILS SHEET 16.
3. CORNER PANEL CONSTRUCTION: PANEL CORNERS ARE BUTT JOINED, SECURED WITH FOUR (4) FULL WIDTH 5/16" THREADED TIE RODS AT TOP RAIL, AND BOTTOM RAIL. ALL JOINTS ARE WELDED. EXCEPTION: INTERMEDIATE HORIZONTAL MUNTIN BAR IS SECURED BY APPROVED CLIPS (ITEM #79, SHEET 15, DETAIL V).
4. THE GLAZING MATERIAL IN BOTH FIXED AND SLIDING PANELS OF ALL SLIDING DOORS MUST COMPLY WITH THE REQUIREMENTS IN THE PERFORMANCE SPECIFICATIONS AND METHODS OF TEST FOR SAFETY GLAZING MATERIALS USED IN BUILDINGS PER FBC REQUIREMENTS.
5. CVR = CONCEALED VERTICAL ROD.

PRODUCT REVISED
as complying with the Florida Building Code
Acceptance No. 13-0529.21
Expiration Date APR 11 2018
By Ishay I. Chandu

FRANK L. BENNARDO, P.E. #PE0046549
LICENSE
10/22/2013
STATE OF FLORIDA

ENGINEERING EXPRESS, INC.
160 SW 12th AVENUE
DEERFIELD BEACH, FL 33442
Ph: (954) 354-0660 Fax: (954) 354-0443
WWW.ENGEXP.COM
CERT OF AUTH #9985
A. FRANK L. BENNARDO, P.E., INC. INNOVATION

STANLEY
ACCESS TECHNOLOGIES
65 SCOTT SWAMP ROAD, FARMINGTON, CT 06032

SERIES "DURA-STORM 2000/3000" AUTO SGD
BI-PARTING/SINGLE SLIDE (NI)
MIAMI-DADE NOTICE OF ACCEPTANCE

REMARKS	DRWN	CHKD	DATE
INIT ISSUE	KL	FLB	07/01/12
REVIEWER COMMENT	KL	FLB	11/26/12
ADD'L COMMENTS	KL	FLB	01/28/13
ADD'L COMMENTS	KL	FLB	03/22/13
ADD'L COMMENTS	KL	FLB	04/01/13
REV. PER TESTING	KL	FLB	07/17/13
ADD'L COMMENTS	KL	FLB	08/07/13
ADD'L COMMENTS	KL	FLB	10/03/13

12-SAT-15

SCALE: - 07

PAGE DESCRIPTION:

19

1

DURA-STORM SERIES 2000 W/ OPTIONAL TRANSOM, TYPICAL ELEVATIONS

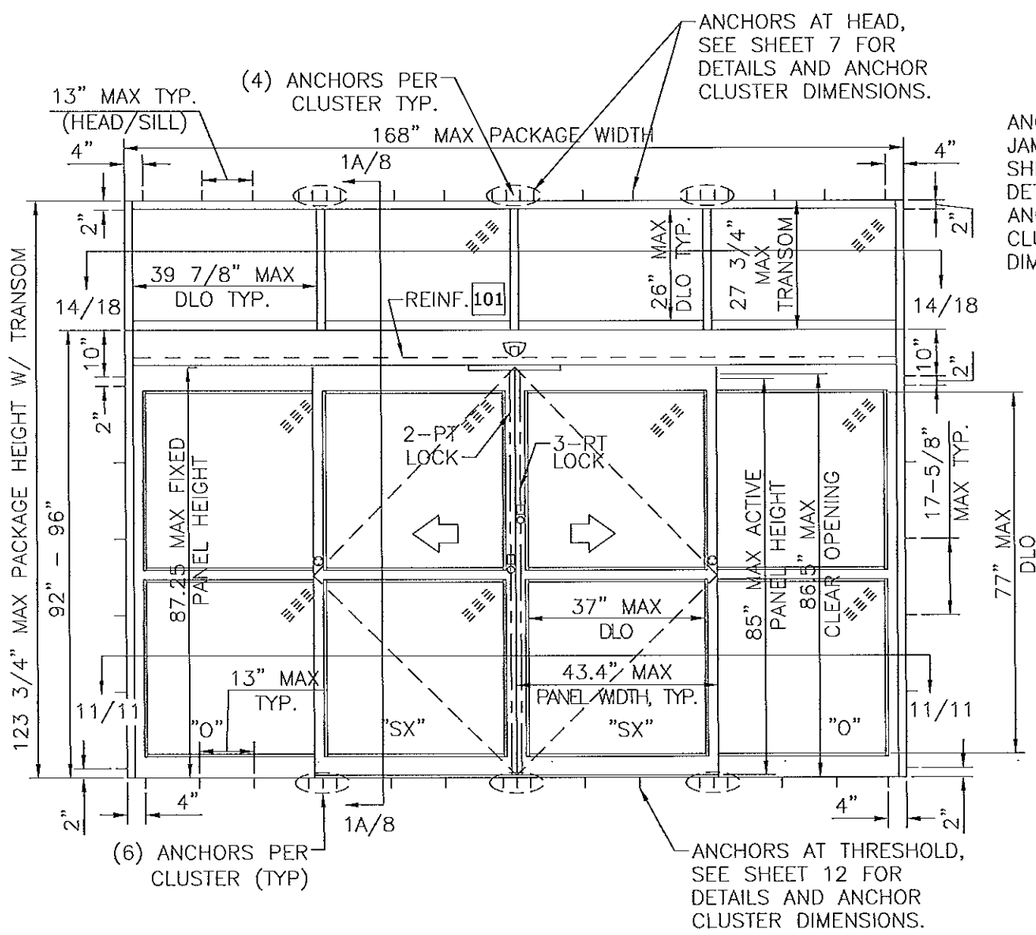

DURA-STORM 2000 TYPICAL ELEVATIONS

0-SX-SX-0 (BI-PART)

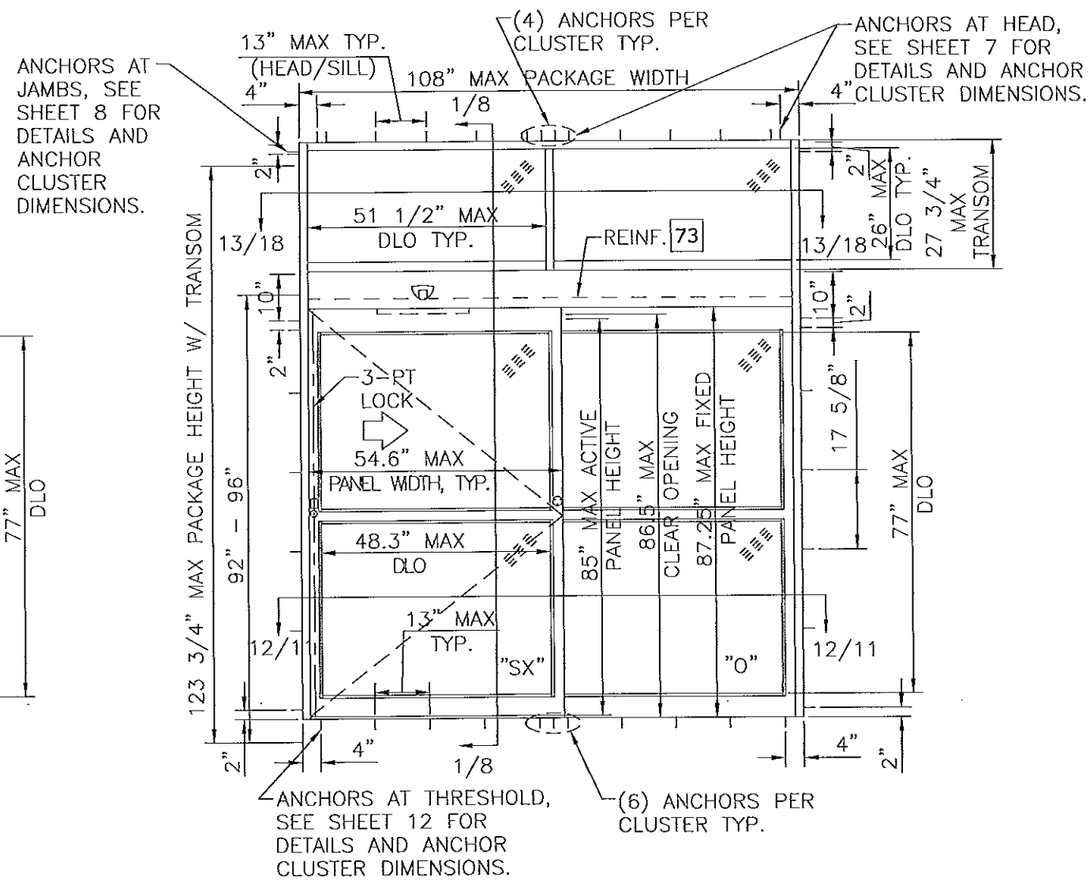

DURA-STORM 2000 TYPICAL ELEVATIONS

SX-0 (SINGLE SLIDE)

NOTES
1. MAX DLO AS SHOWN.
   1.1. BI-PARTING PANEL: 37" W X 77" H; TRANSOMS: 39 7/8" W X 26" H.
   1.2. SINGLE SLIDE PANEL: 48 1/4" W X 77" H; TRANSOMS: 51 1/2" W X 26" H.
2. 5-POINT LOCKING STANDARD (3-PT ACTIVE & 2-PT). SEE SHEET 17.
3. PRODUCT SHALL BE MANUFACTURED AND INSTALLED IN ACCORDANCE WITH PRODUCT APPROVALS.
4. SEE SHEETS 7, 8, 11 AND 12 FOR REQUIRED ANCHORAGE.
5. SEE SHEET 16 FOR GLAZING DETAILS.

PRODUCT REVISED
in accordance with the Florida Building Code
Acceptance No 13-0529.21
Expiration Date 4/11/18
By [signature]
Miami-Dade Product Control

FRANK L. BENNARDO, P.E. #PE0048519
LICENSE No. 46549
STATE OF FLORIDA
PROFESSIONAL ENGINEER
10/22/2013

ENGINEERING EXPRESS, INC.
160 SW 12th AVENUE, #206
DEERFIELD BEACH, FL 33442
Ph: (954) 354-0660 Fax: (954) 354-0443
WWW.ENGEXP.COM
CERT OF AUTH #9885
A. FRANK L. BENNARDO, P.E., INC. INNOVATION

STANLEY
ACCESS TECHNOLOGIES
65 SCOTT SWAMP ROAD, FARMINGTON, CT 06032

SERIES "DURA-STORM 2000/3000" AUTO SGD
BI-PARTING/SINGLE SLIDE (NI)
MIAMI-DADE NOTICE OF ACCEPTANCE

REMARKS	DRWN	CHKD	DATE
INIT ISSUE	KL	FLB	07/01/12
REVIEWER COMMENT	KL	FLB	11/26/12
ADDL COMMENTS	KL	FLB	01/28/13
ADDL COMMENTS	KL	FLB	03/22/13
ADDL COMMENTS	KL	FLB	04/01/13
REV. PER TESTING	KL	FLB	07/17/13
ADDL COMMENTS	KL	FLB	08/07/13
ADDL COMMENTS	KL	FLB	10/03/13

12-SAT-15
SCALE: - 07
PAGE DESCRIPTION:

DURA-STORM SERIES 3000 W/ OPTIONAL TRANSOM, TYPICAL ELEVATIONS

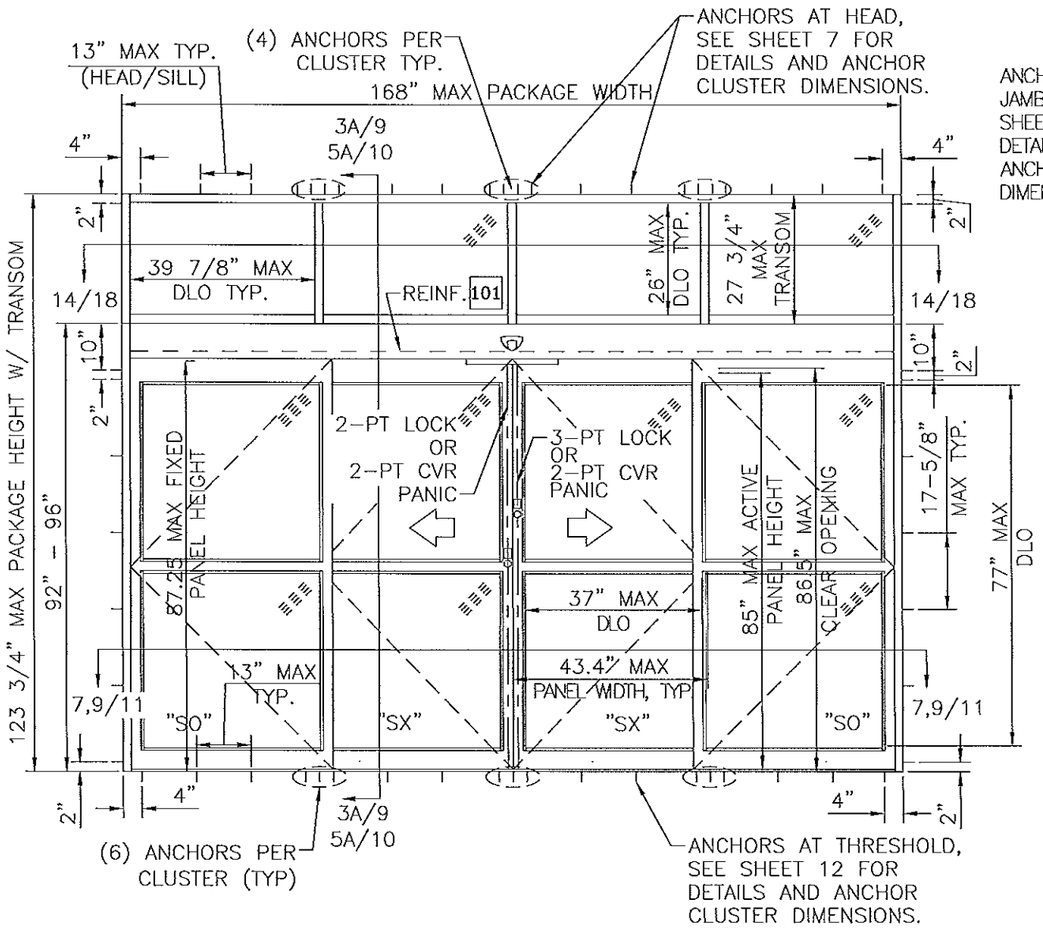

DURA-STORM 3000 TYPICAL ELEVATIONS

SO-SX-SX-SO (BI-PART)

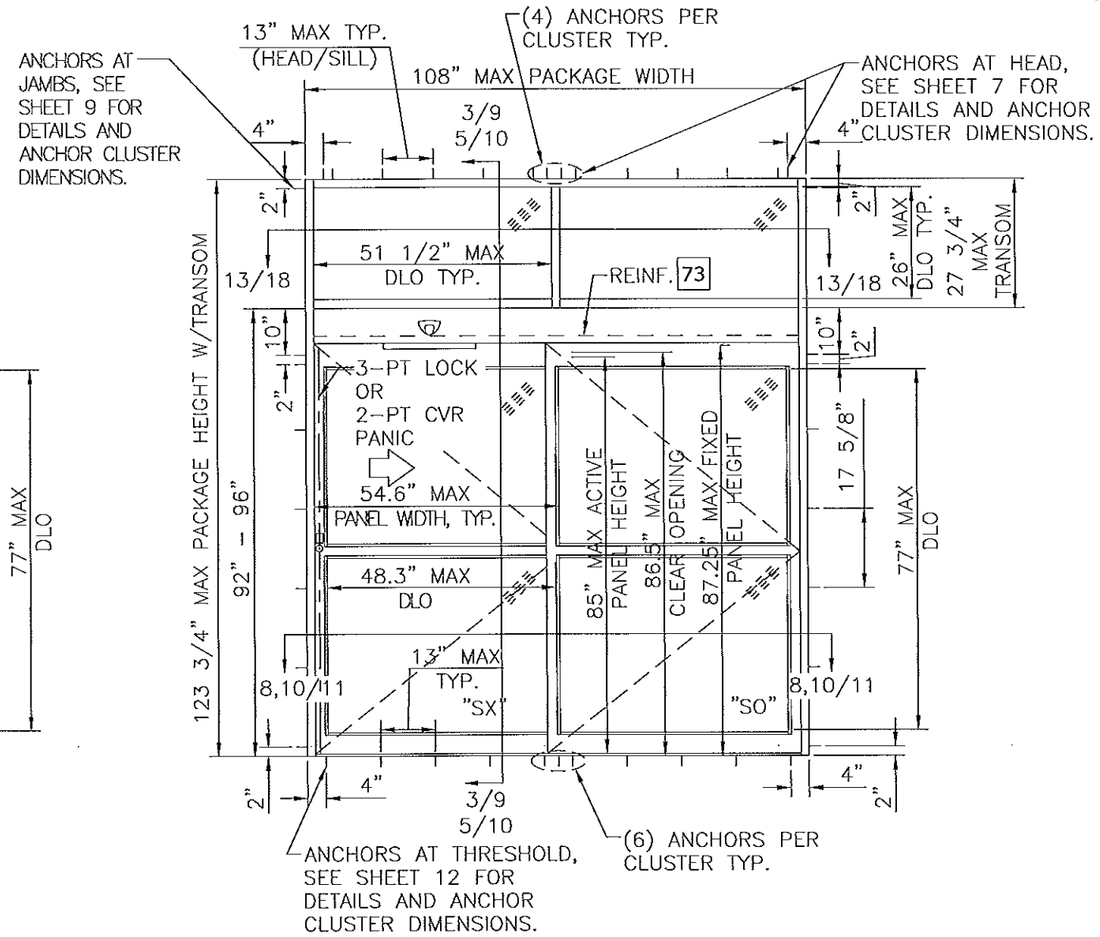

DURA-STORM 3000 TYPICAL ELEVATIONS

SX-SO (SINGLE SLIDE)

NOTES
1. MAX DLO AS SHOWN.
 1.1. BI-PARTING PANEL: 37" W X 77" H, 36 3/4" H WITH PANIC MUNTIN; TRANSOMS: 39 7/8" W X 26" H.
 1.2. SINGLE SLIDE PANEL: 48 1/4" W X 77" H, 36 3/4" H WITH PANIC MUNTIN; TRANSOMS: 51 1/2" W X 26" H.
3. 4-POINT CVR LOCKING WITH G86 PANIC RELEASE (2-PT CVR ACTIVE & 2-PT CVR) AND 5-POINT LOCKING (3-PT ACTIVE & 2-PT) AVAILABLE. SEE SHEET 17.
4. PRODUCT SHALL BE MANUFACTURED AND INSTALLED IN ACCORDANCE WITH PRODUCT APPROVALS.
5. SEE SHEETS 7, 9, 10, 11 AND 12 FOR REQUIRED ANCHORAGE.
6. SEE SHEET 16 FOR GLAZING DETAILS.

PRODUCT REVISED
as complying with the Florida Building Code
Acceptance No. 13-0529.21
Expiration Date 4/11/18
By [signature]
Miami Dade Product Control

FRANK L. BENNARDO, P.E.
PE0046540
10/22/2013

ENGINEERING EXPRESS
160 SW 12th AVENUE, #206
DEERFIELD BEACH, FL 33442
PH: (954) 354-0660 FAX: (954) 354-0443
WWW.ENGEXP.COM
CERT OF AUTH #9885
A FRANK L. BENNARDO, P.E., INC. INNOVATION

STANLEY
ACCESS TECHNOLOGIES
65 SCOTT SWAMP ROAD, FARMINGTON, CT 06032

SERIES "DURA-STORM 2000/3000" AUTO SGD
BI-PARTING/SINGLE SLIDE (NI)
MIAMI-DADE NOTICE OF ACCEPTANCE

REMARKS	DRWN	CHKD	DATE
INIT ISSUE	KL	FLB	07/01/12
REVIEWER COMMENT	KL	FLB	11/26/12
ADD'L COMMENTS	KL	FLB	01/28/13
ADD'L COMMENTS	KL	FLB	03/22/13
ADD'L COMMENTS	KL	FLB	04/01/13
REV. PER TESTING	KL	FLB	07/17/13
ADD'L COMMENTS	KL	FLB	08/07/13
ADD'L COMMENTS	KL	FLB	10/03/13

12-SAT-15
SCALE: - 07
PAGE DESCRIPTION:

19

3

DURA-STORM SERIES 2000 ELEVATION AND PLAN

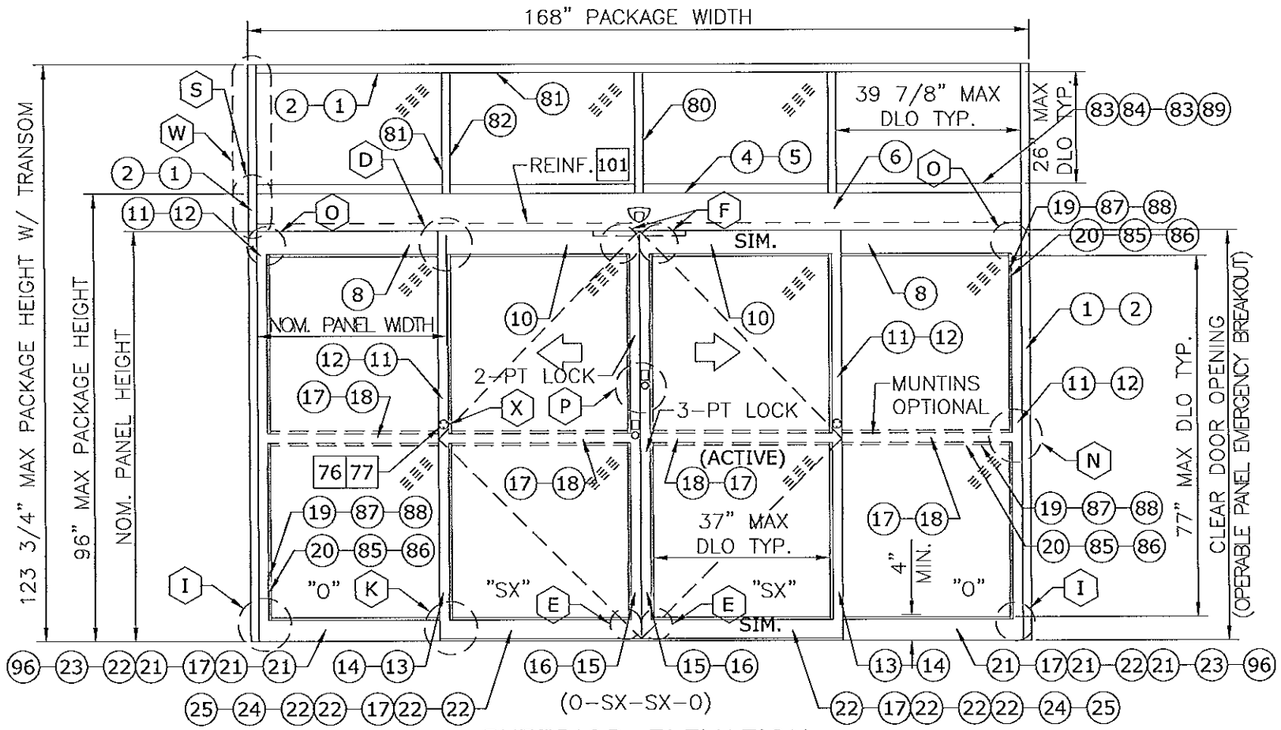

EXTERIOR ELEVATION

XX : EXTRUSION
XX XX : EXTRUSION, MULTI-PIECE
XX XX : EXTRUSION, OPTION
XX : PART
XX XX : PART, MULTI-PIECE
XX XX : PART, OPTION
XX : DETAIL
XX XX : DETAIL, OPTION

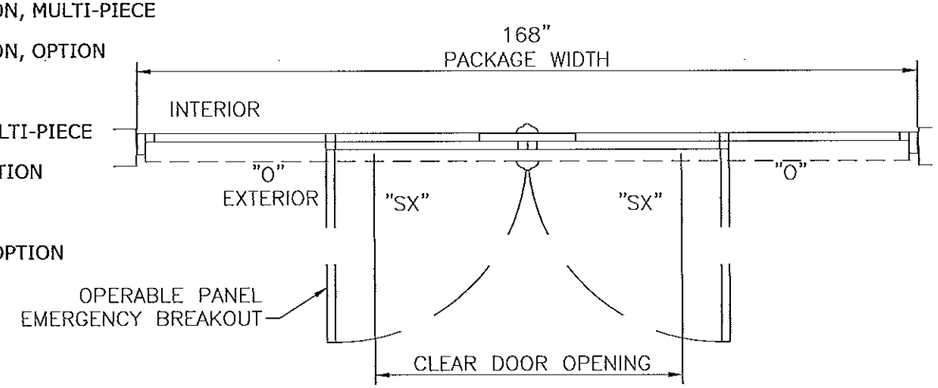

PLAN

NOTES
1. TYPICAL DOOR SHOWN. STILE, RAIL AND MUNTIN OPTIONS AVAILABLE AS INDICATED.
2. HORIZONTAL MUNTIN BAR NOT REQUIRED AS INDICATED BY DASHED LINES. MAX DLO: 37" W X 77" H AS SHOWN
3. 5-POINT LOCKING STANDARD (3-PT ACTIVE & 2-PT). SEE SHEET 17.
4. PRODUCT SHALL BE MANUFACTURED AND INSTALLED IN ACCORDANCE WITH PRODUCT APPROVALS.
5. SEE SHEETS 7, 8, 11, AND 12 FOR REQUIRED ANCHORAGE.
6. SEE SHEET 16 FOR GLAZING DETAILS.

DESIGN RATINGS		
MISSILE IMPACT RATING		
☒	NON-IMPACT RESISTANT	
DESIGN PRESSURE RATING (PSF[Pa])		
	WHERE WATER INFILTRATION RATING IS REQUIRED	WHERE WATER INFILTRATION RATING IS NOT REQUIRED
POSITIVE	NOT APPROVED	55 PSF
NEGATIVE	NOT APPROVED	55 PSF

SERIES 2000 AVAILABLE PACKAGE WIDTH INFORMATION*

PACKAGE WIDTH	ROUGH OPENING	STILE TYPE	NOMINAL CLEAR DOOR OPENING	NOMINAL PANEL WIDTH (SX)	NOMINAL PANEL WIDTH (O)	CAULKING ALLOWANCE
168.0"	168.5"	NARROW	70.6"	42.7"	42.7"	1/4" / SIDE
168.0"	168.5"	MEDIUM	66.3"	43.4"	43.4"	1/4" / SIDE

SERIES 2000 AVAILABLE PACKAGE HEIGHT INFORMATION*

PACKAGE HEIGHT	ROUGH OPENING	NOMINAL CLEAR DOOR OPENING	CAULKING ALLOWANCE
92.0"	92.3"	82.5"	1/4" TOP
96.0"	96.3"	86.5"	1/4" TOP

PRODUCT REVISED
as complying with the Florida Building Code
Acceptance No. 13-0529.21
Expiration Date 4/11/18
By [signature]
Miami Dade Product Control

FRANK L. BENNARDO, P.E.
#PE0046549
LICENSE
10/22/2013
STATE OF FLORIDA
PROFESSIONAL ENGINEER

ENGINEERING EXPRESS
160 SW 12th AVENUE, #1106
DEERFIELD BEACH, FL 33442
PH: (954) 354-0660 FAX: (954) 354-0443
WWW.ENGEXP.COM
CERT OF AUTH #9885
A FRANK L. BENNARDO, P.E., INC. INNOVATION

STANLEY
ACCESS TECHNOLOGIES
65 SCOTT SWAMP ROAD, FARMINGTON, CT 06032

SERIES "DURA-STORM 2000/3000" AUTO SGD
BI-PARTING/SINGLE SLIDE (NI)
MIAMI-DADE NOTICE OF ACCEPTANCE

REMARKS	DRWN	CHKD	DATE
INIT ISSUE	KL	FLB	07/01/12
REVIEWER COMMENT	KL	FLB	11/26/12
ADD'L COMMENTS	KL	FLB	01/28/13
ADD'L COMMENTS	KL	FLB	03/22/13
ADD'L COMMENTS	KL	FLB	04/01/13
REV. PER TESTING	KL	FLB	07/17/13
ADD'L COMMENTS	KL	FLB	08/07/13
ADD'L COMMENTS	KL	FLB	10/03/13

12-SAT-15
SCALE: - 07
PAGE DESCRIPTION:

19

4

DURA-STORM SERIES 3000 ELEVATION AND PLAN

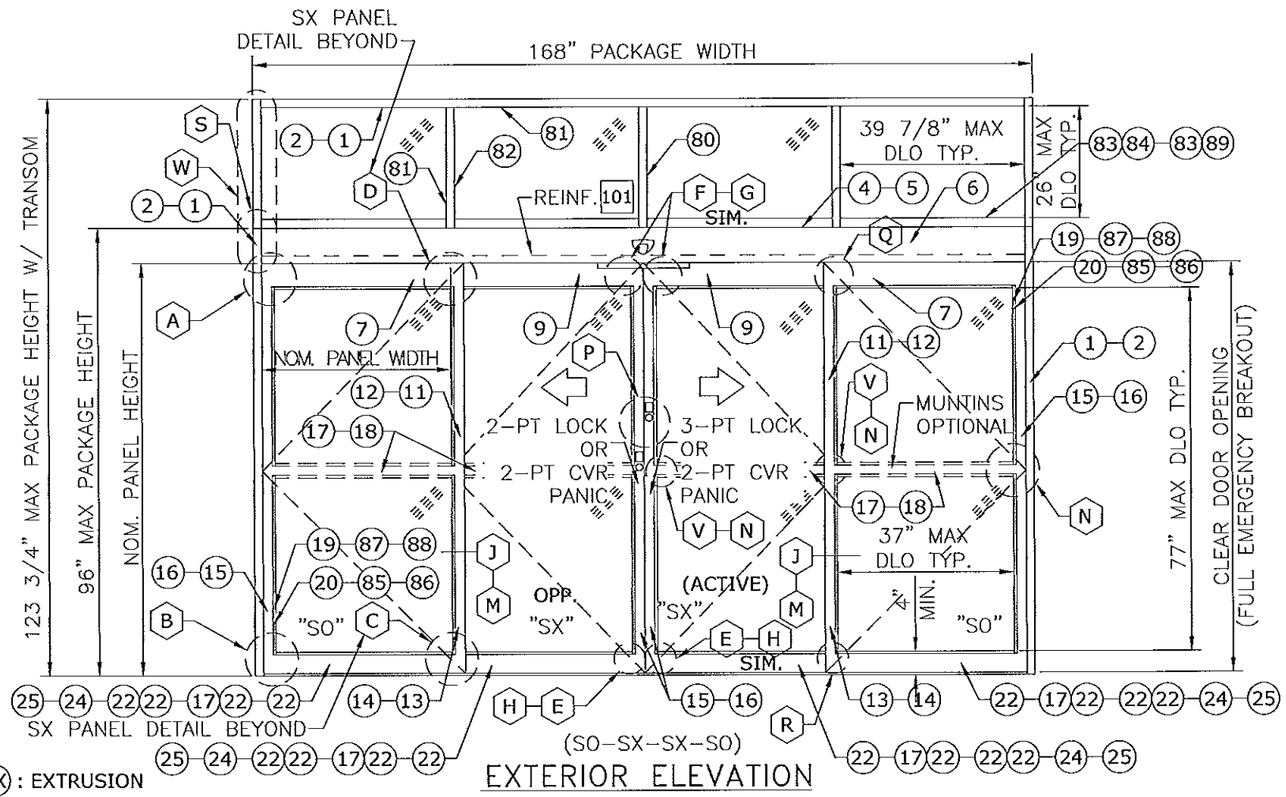

EXTERIOR ELEVATION

XX : EXTRUSION
XX XX : EXTRUSION, MULTI-PIECE
XX-XX : EXTRUSION, OPTION
XX : PART
XX XX : PART, MULTI-PIECE
XX-XX : PART, OPTION
XX : DETAIL
XX-XX : DETAIL, OPTION

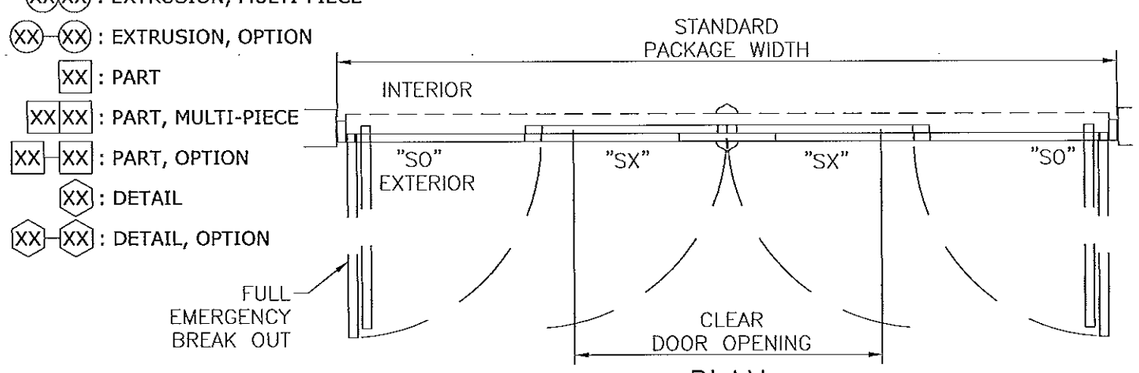

PLAN

DESIGN RATINGS		
MISSILE IMPACT RATING		
☒	NON-IMPACT RESISTANT	
DESIGN PRESSURE RATING (PSF[Pa])		
	WHERE WATER INFILTRATION RATING IS REQUIRED	WHERE WATER INFILTRATION RATING IS NOT REQUIRED
POSITIVE	NOT APPROVED	55 PSF
NEGATIVE	NOT APPROVED	55 PSF

SERIES 3000 AVAILABLE PACKAGE WIDTH INFORMATION*

PACKAGE WIDTH	ROUGH OPENING	STILE TYPE	NOMINAL CLEAR DOOR OPENING	NOMINAL PANEL WIDTH (SX)	NOMINAL PANEL WIDTH (O)	CAULKING ALLOWANCE
168.0"	168.5"	NARROW	70.6"	42.7"	42.7"	1/4" / SIDE
168.0"	168.5"	MEDIUM	66.3"	43.4"	43.4"	1/4" / SIDE

SERIES 3000 AVAILABLE PACKAGE HEIGHT INFORMATION*

PACKAGE HEIGHT	ROUGH OPENING	NOMINAL CLEAR DOOR OPENING	CAULKING ALLOWANCE
92.0"	92.3"	82.5"	1/4" TOP
96.0"	96.3"	86.5"	1/4" TOP

NOTES
1. TYPICAL DOOR SHOWN. STILE, RAIL AND MUNTIN OPTIONS AVAILABLE AS INDICATED.
2. HORIZONTAL MUNTIN BAR NOT REQUIRED EXCEPT AT PANIC DEVICE, AS INDICATED BY DASHED LINES. MAX PANEL DLO: 37" W X 77 3/8" H, 36 3/4" H WITH PANIC MUNTIN AS SHOWN.
3. 4-POINT CVR LOCKING WITH G86 PANIC RELEASE (2-PT CVR ACTIVE & 2-PT CVR) AND 5-POINT LOCKING (3-PT ACTIVE & 2-PT) AVAILABLE. SEE SHEET 17.
4. PRODUCT SHALL BE MANUFACTURED AND INSTALLED IN ACCORDANCE WITH PRODUCT APPROVALS.
5. SEE SHEETS 7, 9, 10, 11, AND 12 FOR REQUIRED ANCHORAGE.
6. SEE SHEET 16 FOR GLAZING DETAILS.

PRODUCT REVISED
as complying with the Florida Building Code
Acceptance No. 13-0529.21
Expiration Date 4/11/18
By [signature]
Miami Dade Product Control

FRANK L. BENNARDO, P.E.
PE0056196
LICENSE No. 46549
10/22/2013
STATE OF FLORIDA
PROFESSIONAL ENGINEER

ENGINEERING EXPRESS
160 SW 12th AVENUE, #206
DEERFIELD BEACH, FL 33442
Ph: (954) 354-0660 Fax: (954) 354-0665
WWW.ENGEXP.COM
CERT OF AUTH #9885
A. FRANK L. BENNARDO, P.E., INC. INNOVATION

STANLEY
ACCESS TECHNOLOGIES
65 SCOTT SWAMP ROAD, FARMINGTON, CT 06032

SERIES "DURA-STORM 2000/3000" AUTO SGD
BI-PARTING/SINGLE SLIDE (NI)
MIAMI-DADE NOTICE OF ACCEPTANCE

REMARKS	DRWN	CHKD	DATE
INIT ISSUE	KL	FLB	07/01/12
REVIEWER COMMENT	KL	FLB	11/26/12
ADDL COMMENTS	KL	FLB	01/28/13
ADDL COMMENTS	KL	FLB	03/22/13
ADDL COMMENTS	KL	FLB	04/01/13
REV. PER TESTING	KL	FLB	07/17/13
ADDL COMMENTS	KL	FLB	08/07/13
ADDL COMMENTS	KL	FLB	10/03/13

12-SAT-15
SCALE: - 07
PAGE DESCRIPTION:

DURA-STORM SERIES 2000/3000 SINGLE SLIDES, ELEVATION AND PLAN

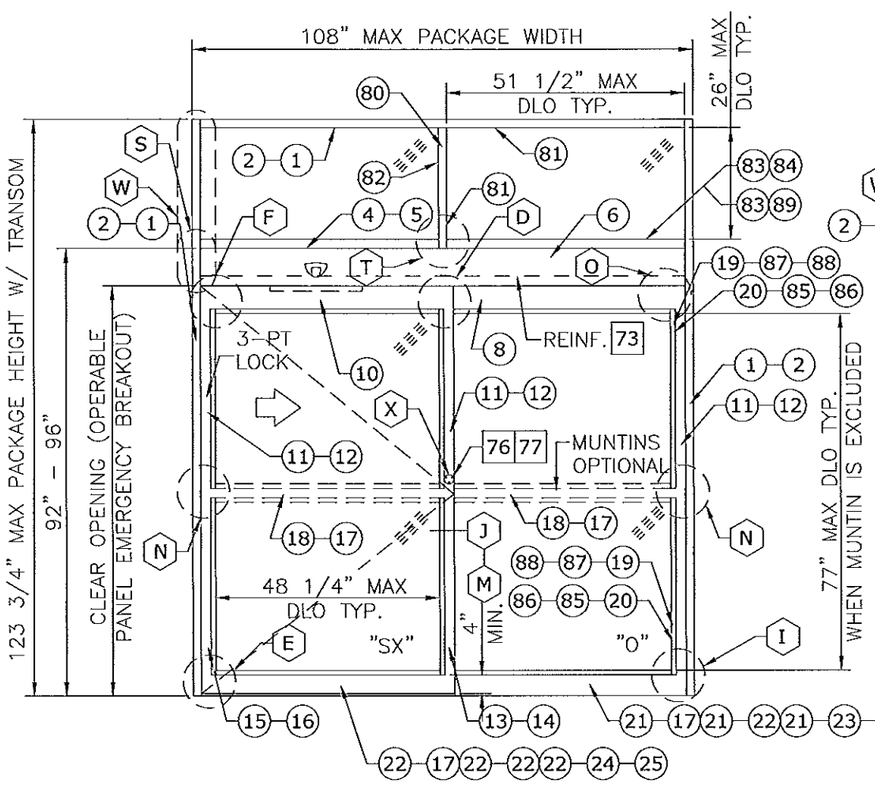

SERIES 2000 (SX-O) SINGLE SLIDE W/ TRANSOM

EXTERIOR ELEVATION

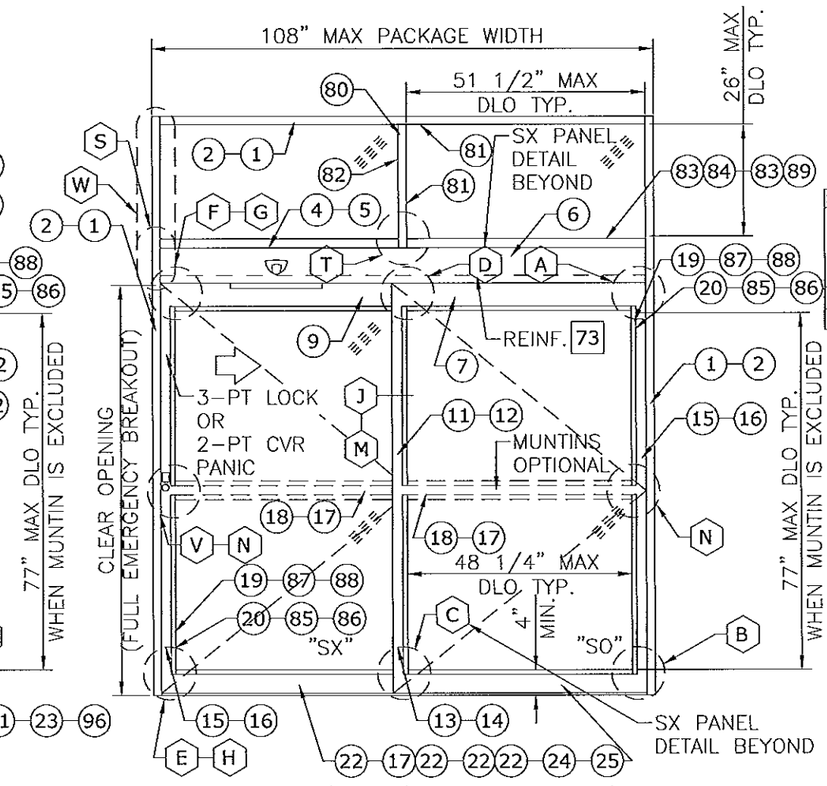

SERIES 3000 (SX-SO) SINGLE SLIDE W/ TRANSOM

EXTERIOR ELEVATION

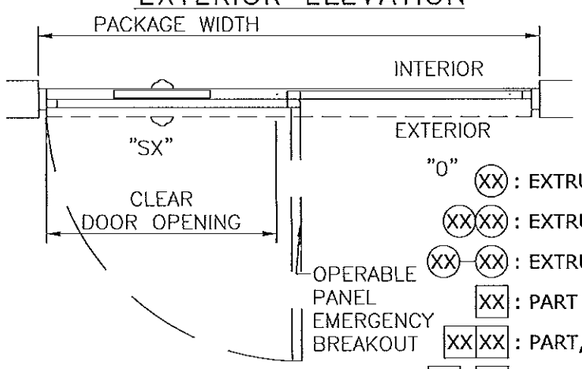

SERIES 2000 (SX-O) SINGLE SLIDE

PLAN

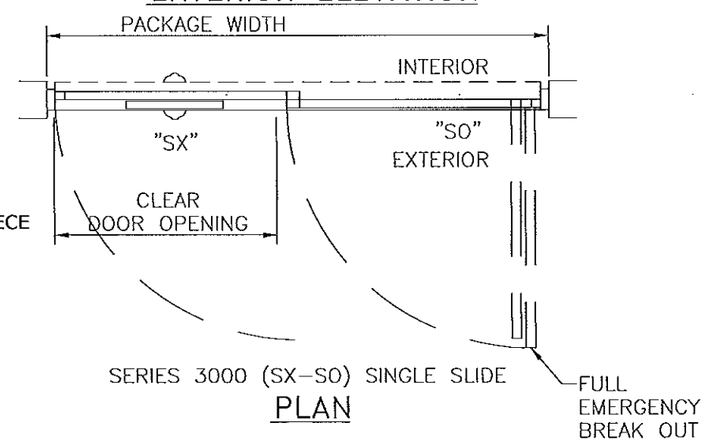

SERIES 3000 (SX-SO) SINGLE SLIDE

PLAN

(XX) : EXTRUSION
(XX)(XX) : EXTRUSION, MULTI-PIECE
(XX)-(XX) : EXTRUSION, OPTION
[XX] : PART
[XX][XX] : PART, MULTI-PIECE
[XX]-[XX] : PART, OPTION
⬡XX⬡ : DETAIL
⬡XX⬡-⬡XX⬡ : DETAIL, OPTION

DESIGN RATINGS		
MISSILE IMPACT RATING		
☒	NON-IMPACT RESISTANT	
DESIGN PRESSURE RATING (PSF[Pa])		
	WHERE WATER INFILTRATION RATING IS REQUIRED	WHERE WATER INFILTRATION RATING IS NOT REQUIRED
POSITIVE	NOT APPROVED	55 PSF
NEGATIVE	NOT APPROVED	55 PSF

SERIES 2000 AND 3000 SINGLE SLIDE AVAILABLE PACKAGE WIDTH INFORMATION*

PACKAGE WIDTH	ROUGH OPENING	STILE TYPE	NOMINAL CLEAR DOOR OPENING	NOMINAL PANEL WIDTH (SX)	NOMINAL PANEL WIDTH (O)	CAULKING ALLOWANCE
108.0"	108.5"	NARROW	46.4"	53.8"	53.8"	1/4" / SIDE
108.0"	108.5"	MEDIUM	44.3"	54.6"	54.6"	1/4" / SIDE

SERIES 2000 AND 3000 SINGLE SLIDE AVAILABLE PACKAGE HEIGHT INFORMATION*

PACKAGE HEIGHT	ENTRANCE HEIGHT	ROUGH OPENING	NOMINAL CLEAR DOOR OPENING	CAULKING ALLOWANCE
119.8"	92.0"	92.3"	82.5"	1/4" TOP
123.8"	96.0"	96.3"	86.5"	1/4" TOP

* NOTE: THIS SYSTEM WAS TESTED AT A SIZE OF 108"X123-3/4", THESE TABLES INDICATE PACKAGE SIZES AVAILABLE FROM MANUFACTURER.

NOTES
1. TYPICAL DOOR SHOWN. STILE, RAIL AND MUNTIN OPTIONS AVAILABLE AS INDICATED.
2. HORIZONTAL MUNTIN BAR NOT REQUIRED EXCEPT AT PANIC DEVICE, AS INDICATED BY DASHED LINES. MAX PANEL DLO: 48 1/4" W X 77 1/16" H, 36 3/4" H WITH PANIC MUNTIN AS SHOWN. MAX TRANSOM DLO 51.5" W X 26" H.
3. 2-POINT CVR LOCKING WITH G86 PANIC RELEASE AND 3-POINT LOCKING AVAILABLE ON SERIES 3000. 3-POINT ONLY ON SERIES 2000. SEE SHEET 17.
4. PRODUCT SHALL BE MANUFACTURED AND INSTALLED IN ACCORDANCE WITH PRODUCT APPROVALS.
5. SEE SHEETS 7 THROUGH 12 FOR REQUIRED ANCHORAGE.
6. SEE SHEET 16 FOR GLAZING DETAILS.

PRODUCT REVISED
as complying with the Florida Building Code
Acceptance No. 13-0529.21
Expiration Date 4/11/13
By
Miami Dade Product Control

FRANK L. BERNARDO P.E. # PE0046540
LICENSED
10/22/2013
STATE OF FLORIDA
PROFESSIONAL ENGINEER

ENGINEERING EXPRESS, INC.
160 SW 12th AVENUE #106
DEERFIELD BEACH, FL 33442
Ph: (954) 354-0660 Fax: (954) 354-0673
WWW.ENGEXP.COM
CERT OF AUTH #9885
A. FRANK L. BERNARDO, P.E., INC. INNOVATION

STANLEY
ACCESS TECHNOLOGIES
65 SCOTT SWAMP ROAD, FARMINGTON, CT 06032
SERIES "DURA-STORM 2000/3000" AUTO SGD
BI-PARTING/SINGLE SLIDE (NI)
MIAMI-DADE NOTICE OF ACCEPTANCE

REMARKS	DRWN	CHKD	DATE
INIT ISSUE	KL	FLB	07/01/12
REVIEWER COMMENT	KL	FLB	11/26/12
ADD'L COMMENTS	KL	FLB	01/28/13
ADD'L COMMENTS	KL	FLB	03/22/13
ADD'L COMMENTS	KL	FLB	04/01/13
REV. PER TESTING	KL	FLB	07/17/13
ADD'L COMMENTS	KL	FLB	08/07/13
ADD'L COMMENTS	KL	FLB	10/03/13

12-SAT-15

SCALE: - 07

PAGE DESCRIPTION:

DURA-STORM SERIES 2000/3000 HEADER ANCHORING

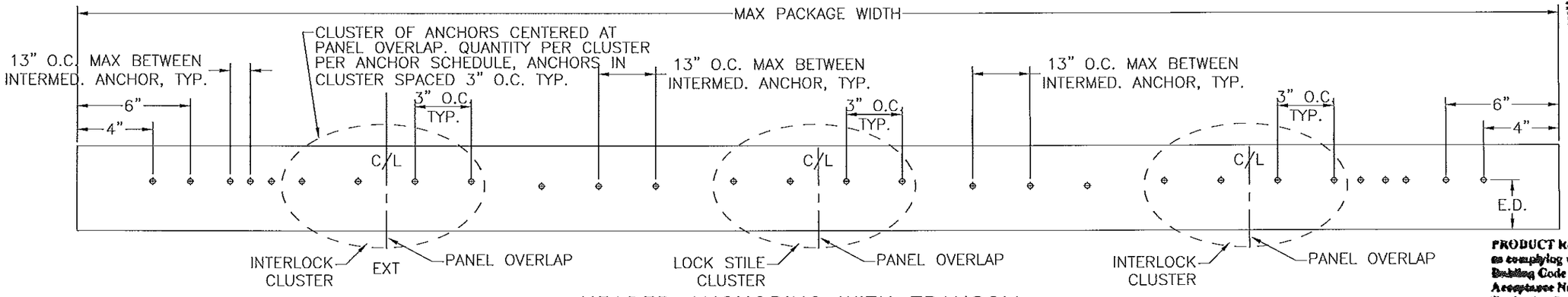

HEADER ANCHORING WITH TRANSOM
N.T.S.

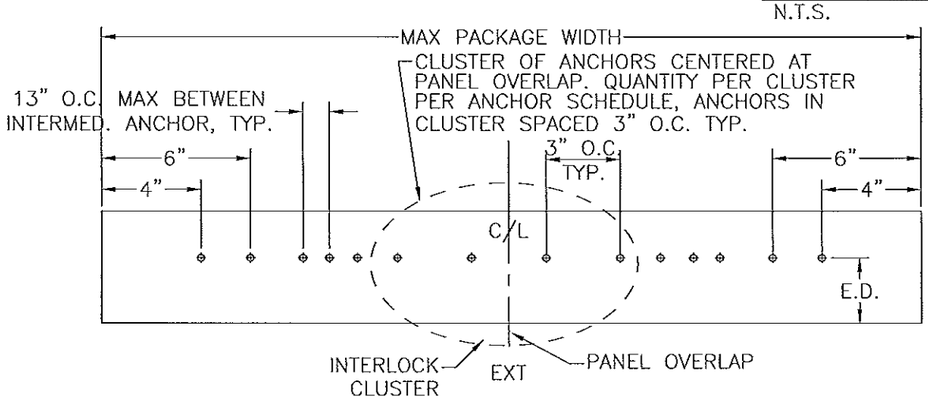

HEADER ANCHORING WITH TRANSOM
N.T.S. SINGLE SLIDE

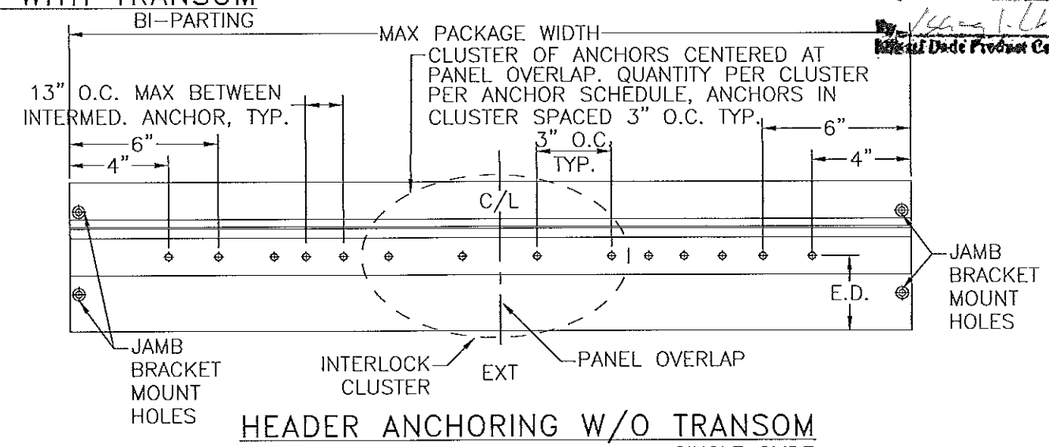

HEADER ANCHORING W/O TRANSOM
N.T.S. SINGLE SLIDE

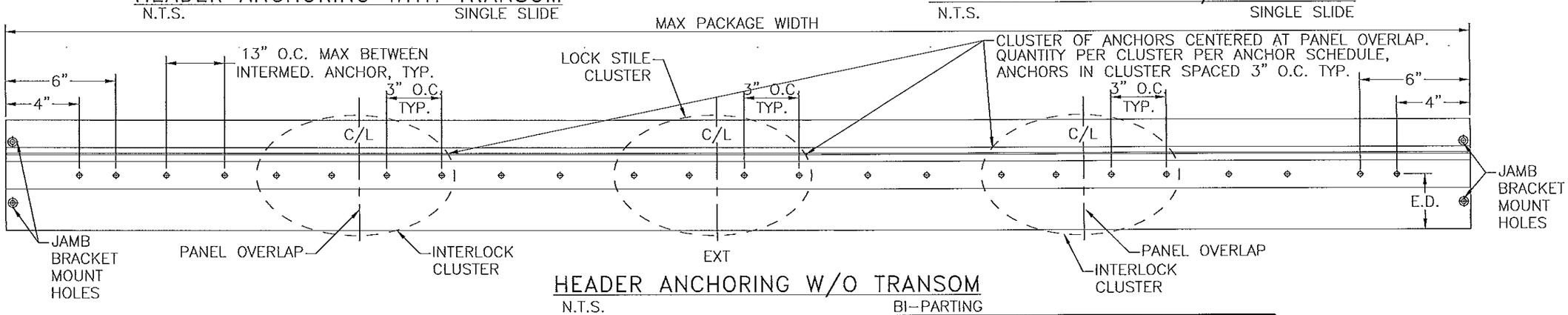

HEADER ANCHORING W/O TRANSOM
N.T.S. BI-PARTING

ANCHOR SCHEDULE

HOST STRUCTURE	ANCHOR	EMBEDMENT	EDGE DISTANCE	NUMBER OF ANCHORS PER INTERLOCK/LOCK STILE CLUSTER				MAX INTERMEDIATE ANCHOR SPACING ALONG HEAD & THRESHOLD	MAX ANCHOR SPACING ALONG JAMBS
				HEAD		THRESHOLD			
				SINGLE SLIDE	BI-PART	SINGLE SLIDE	BI-PART		
3KSI MIN. CONCRETE	1/4" POWERS/RAWL PERMASEAL TAPPER	1-1/2"	3"	4	4	6	6	13" O.C. MAX	17-5/8" O.C. MAX
3/16" MIN. A36 STEEL	1/4-20 SAE GR. 5 SMS	FULL THREAD ENGAGEMENT	1/2"	4	4	N/A	N/A	13" O.C. MAX	17-5/8" O.C. MAX
G=0.55 MIN. WOOD	#14 WOOD SCREW	2"	3/4"	4	4	N/A	N/A	13" O.C. MAX	17-5/8" O.C. MAX
1/8" MIN. 6063-T5 ALUM.	#14 SAE GR. 5 SDS	FULL THREAD ENGAGEMENT	1/2"	4	4	N/A	N/A	13" O.C. MAX	17-5/8" O.C. MAX

SEE JAMB ANCHORS SHEETS 8 THROUGH 10, AND THRESHOLD ANCHORS SHEET 12. THRESHOLD ANCHORS APPLICABLE ONLY TO 3KSI CONCRETE.

PRODUCT REVISED
as complying with the Florida Building Code
Acceptance No. 13-0529.21
Expiration Date 4/11/18
By
Official Date Product Created

FRANK L. BENNARDO LICENSE No. 46549 STATE OF FLORIDA PROFESSIONAL ENGINEER
10/22/2013

FRANK L. BENNARDO, P.E.
LICENSE #046549
ENGINEERING EXPRESS, INC.
160 SW 12th AVENUE, #
DEERFIELD BEACH, FL 33442
PH: (954) 354-0660 FAX: (954) 354-0443
WWW.ENGEXP.COM
CERT OF AUTH #9885
A. FRANK L. BENNARDO, P.E., INC. INNOVATION

STANLEY
ACCESS TECHNOLOGIES
65 SCOTT SWAMP ROAD, FARMINGTON, CT 06032

SERIES "DURA-STORM 2000/3000" AUTO SGD
BI-PARTING/SINGLE SLIDE (NI)
MIAMI-DADE NOTICE OF ACCEPTANCE

REMARKS	DRWN	CHKD	DATE
INIT ISSUE	KL	FLB	07/01/12
REVIEWER COMMENT	KL	FLB	11/26/12
ADD'L COMMENTS	KL	FLB	01/28/13
ADD'L COMMENTS	KL	FLB	03/22/13
ADD'L COMMENTS	KL	FLB	04/01/13
REV. PER TESTING	KL	FLB	07/17/13
ADD'L COMMENTS	KL	FLB	08/07/13
ADD'L COMMENTS	KL	FLB	10/03/13

12-SAT-15
SCALE: - 07
PAGE DESCRIPTION:

DURA-STORM SERIES 2000 JAMB SECTIONS & ANCHORING, W/ STD 5-POINT LOCKING

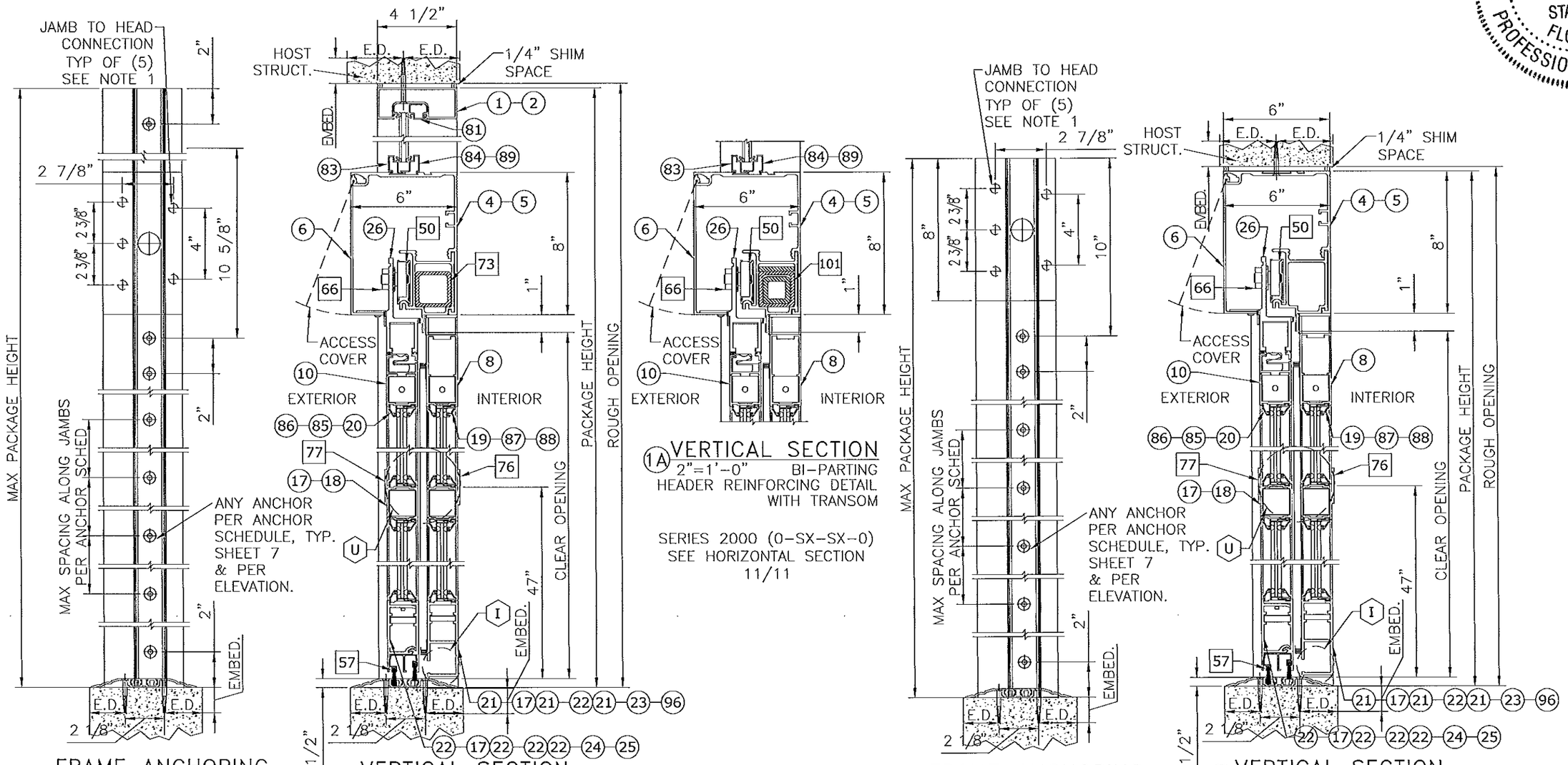

FRAME ANCHORING
N.T.S.
SERIES 2000
(0-SX-SX-0) OR (SX-0)
SEE HORIZONTAL
SECTIONS 11/11 & 12/11
RESPECTIVELY

1 VERTICAL SECTION
2"=1'-0" SINGLE SLIDE
SERIES 2000 (SX-0)
SEE HORIZONTAL SECTION
12/11

1A VERTICAL SECTION
2"=1'-0" BI-PARTING
HEADER REINFORCING DETAIL
WITH TRANSOM

SERIES 2000 (0-SX-SX-0)
SEE HORIZONTAL SECTION
11/11

FRAME ANCHORING
N.T.S.
SERIES 2000
(0-SX-SX-0) OR (SX-0)
SEE HORIZONTAL
SECTIONS 11/11 & 12/11
RESPECTIVELY

2 VERTICAL SECTION
2"=1'-0"
SERIES 2000
(0-SX-SX-0) OR (SX-0)
SEE HORIZONTAL
SECTIONS 11/11 & 12/11
RESPECTIVELY

WITH TRANSOM

WITHOUT TRANSOM

SEE HEAD ANCHORS SHEET 7, AND THRESHOLD ANCHORS SHEET 12. THRESHOLD ANCHORS APPLICABLE ONLY TO 3KSI CONCRETE.

NOTE: SEE SHEET 7 FOR ANCHOR SCHEDULE AND ALLOWABLE ANCHOR TYPES

NOTES
1. JAMB TO HEAD CONNECTION FASTENERS; 5/16-18 HHMS WITH WASHER.
2. SEE SHEET 14 FOR STACKED BOTTOM RAIL OPTIONS.

PRODUCT REVISED
as complying with the Florida Building Code
Acceptance No 13-0529.21
Expiration Date 4/11/18
By [signature]
Miami Dade Product Control

FRANK L. BENNARDO, P.E.
PE0045839
LICENSE
No. 46510
STATE OF FLORIDA
PROFESSIONAL ENGINEER
10/22/2013

ENGINEERING EXPRESS
160 SW 12th AVENUE, #106
DEERFIELD BEACH, FL 33442
PH: (954) 354-0660 FAX: (954) 354-0443
WWW.ENGEXP.COM
CERT OF AUTH #9885
A FRANK L. BENNARDO, P.E., INC. INNOVATION

STANLEY
ACCESS TECHNOLOGIES
65 SCOTT SWAMP ROAD, FARMINGTON, CT 06032
SERIES "DURA-STORM 2000/3000" AUTO SGD
BI-PARTING/SINGLE SLIDE (NI)
MIAMI-DADE NOTICE OF ACCEPTANCE

REMARKS	DRWN	CHKD	DATE
INIT ISSUE	KL	FLB	07/01/12
REVIEWER COMMENT	KL	FLB	11/26/12
ADD'L COMMENTS	KL	FLB	01/28/13
ADD'L COMMENTS	KL	FLB	03/22/13
ADD'L COMMENTS	KL	FLB	04/01/13
REV. PER TESTING	KL	FLB	07/17/13
ADD'L COMMENTS	KL	FLB	08/07/13
ADD'L COMMENTS	KL	FLB	10/03/13

12-SAT-15
SCALE: - 07
PAGE DESCRIPTION:

19

8

DURA-STORM SERIES 3000 JAMB SECTIONS & ANCHORING, W/ STD 5-POINT LOCKING

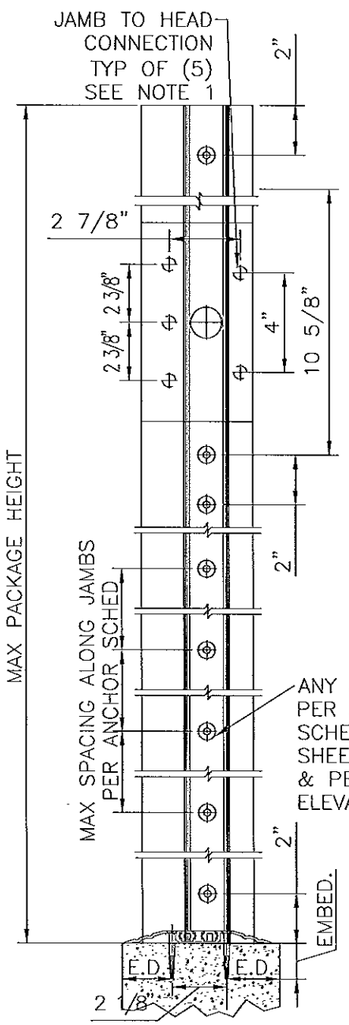

FRAME ANCHORING
N.T.S.
SERIES 3000
(SO-SX-SX-SO) OR (SX-SO)
SEE HORIZONTAL SECTIONS
7/11 & 8/11 RESPECTIVELY

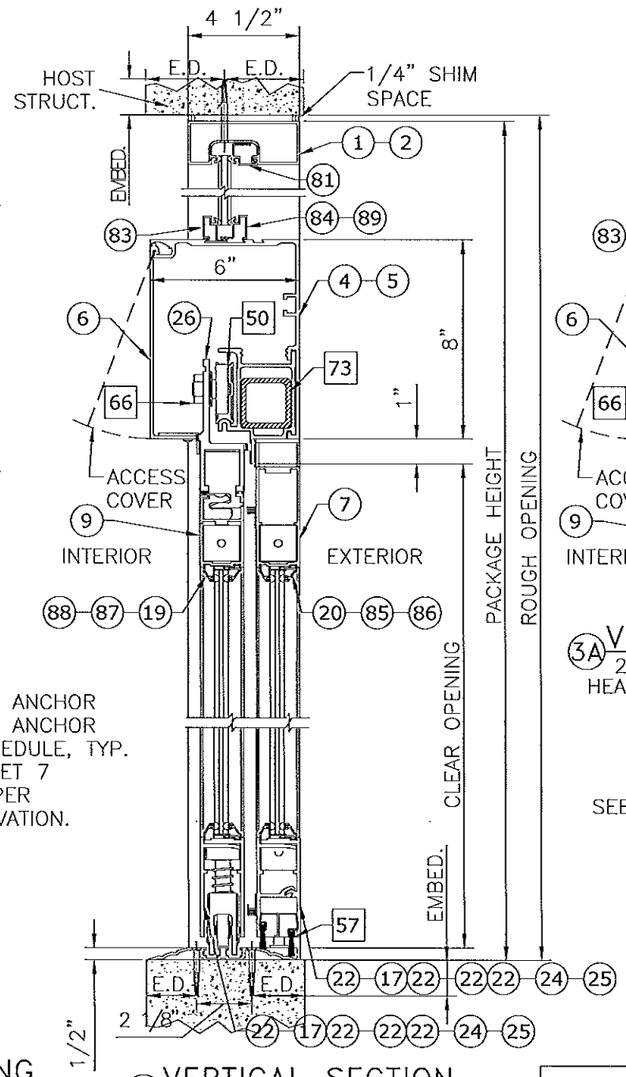

3 VERTICAL SECTION
2"=1'-0"
SERIES 3000 (SX-SO)
SEE HORIZONTAL SECTION
8/11

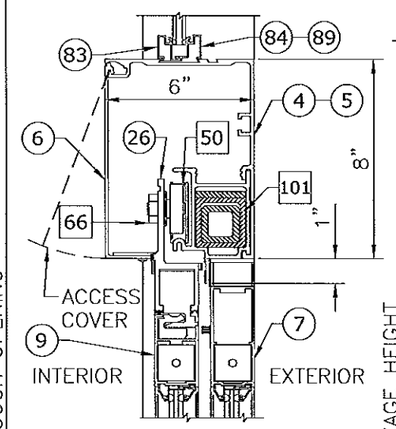

3A VERTICAL SECTION
2"=1'-0" BI-PARTING
HEADER REINFORCING DETAIL
WITH TRANSOM

SERIES 3000
(SO-SX-SX-SO)
SEE HORIZONTAL SECTION
7/11

SEE HEAD ANCHORS SHEET 7, AND THRESHOLD ANCHORS SHEET 12. THRESHOLD ANCHORS APPLICABLE ONLY TO 3KSI CONCRETE.

WITH TRANSOM

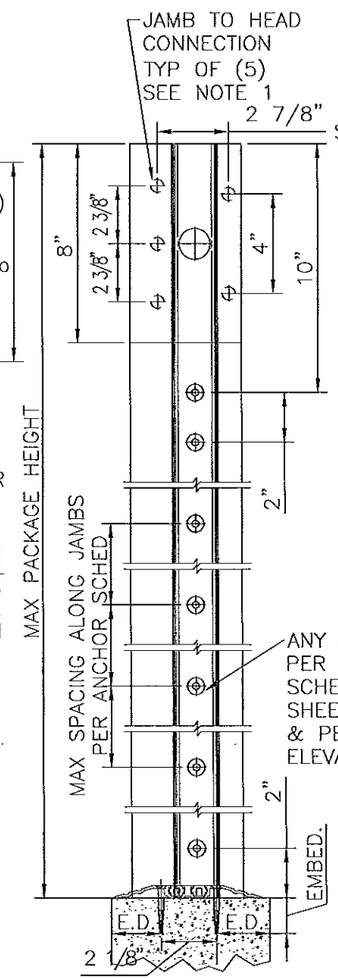

FRAME ANCHORING
N.T.S.
SERIES 3000
(SO-SX-SX-SO) OR (SX-SO)
SEE HORIZONTAL SECTIONS
7/11 & 8/11 RESPECTIVELY

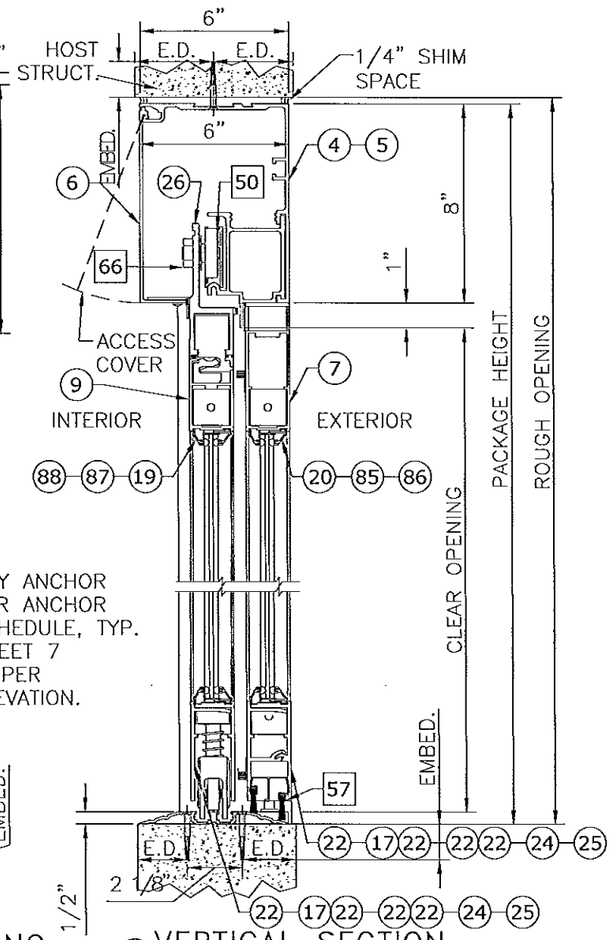

4 VERTICAL SECTION
2"=1'-0"
SERIES 3000
(SO-SX-SX-SO) OR (SX-SO)
SEE HORIZONTAL SECTIONS
7/11 & 8/11 RESPECTIVELY

WITHOUT TRANSOM

NOTES
1. JAMB TO HEAD CONNECTION FASTENERS; 5/16-18 HHMS WITH WASHER.
2. SEE SHEET 14 FOR STACKED BOTTOM RAIL OPTIONS.

NOTE: SEE SHEET 7 FOR ANCHOR SCHEDULE AND ALLOWABLE ANCHOR TYPES

PRODUCT REVISED
as complying with the Florida Building Code
Acceptance No 13-0829.21
Expiration Date 4/11/18
By
Miami Dade Product Control

FRANK L. BENNARDO
LICENSE
No. 46549
STATE OF FLORIDA
PROFESSIONAL ENGINEER
10/22/2013

FRANK L. BENNARDO, P.E.
#PE0046549
ENGINEERING EXPRESS
160 SW 12th AVENUE, #106
DEERFIELD BEACH, FL 33442
Ph: (954) 354-0660 Fax: (954) 354-0443
WWW.ENGEXP.COM
CERT OF AUTH #9885
A. FRANK L. BENNARDO, P.E., INC. INNOVATION

STANLEY
ACCESS TECHNOLOGIES
65 SCOTT SWAMP ROAD, FARMINGTON, CT 06032

SERIES "DURA-STORM 2000/3000" AUTO SGD
BI-PARTING/SINGLE SLIDE (NI)
MIAMI-DADE NOTICE OF ACCEPTANCE

REMARKS	DRWN	CHKD	DATE
INIT ISSUE	KL	FLB	07/01/12
REVIEWER COMMENT	KL	FLB	11/26/12
ADDL COMMENTS	KL	FLB	01/28/13
ADDL COMMENTS	KL	FLB	03/22/13
ADDL COMMENTS	KL	FLB	04/01/13
REV. PER TESTING	KL	FLB	07/17/13
ADDL COMMENTS	KL	FLB	08/07/13
ADDL COMMENTS	KL	FLB	10/03/13

12-SAT-15
SCALE: - 07
PAGE DESCRIPTION:

DURA-STORM SERIES 3000 JAMB SECTIONS & ANCHORING, W/ 4-POINT CVR LOCKING

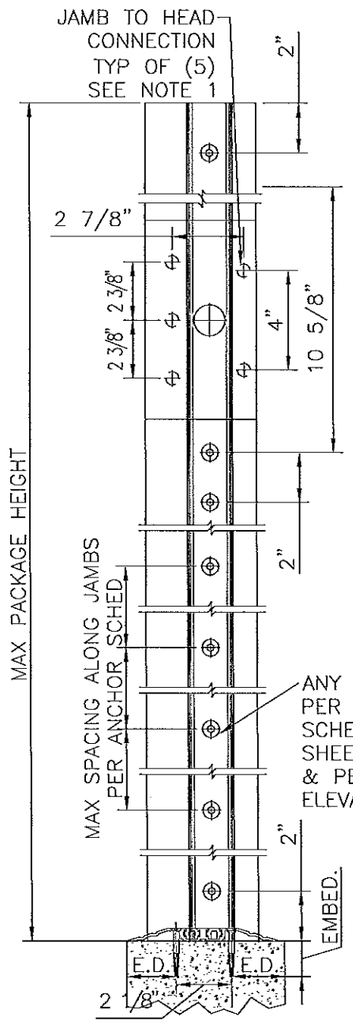

FRAME ANCHORING
N.T.S.
SERIES 3000
(SO–SX–SX–SO) OR (SX–SO)
SEE HORIZONTAL SECTIONS
9/11 & 10/11 RESPECTIVELY

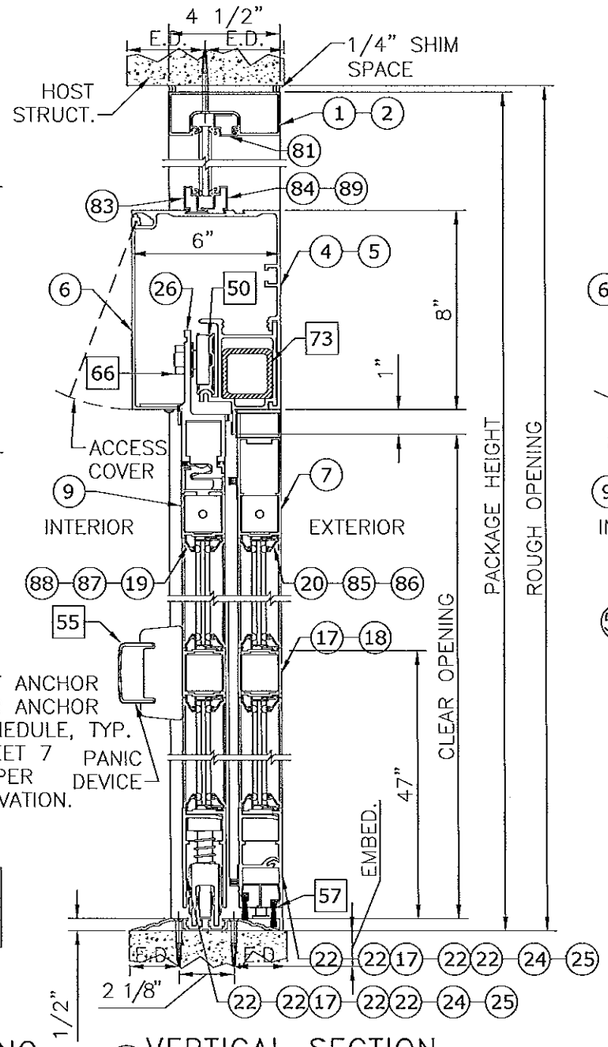

5 VERTICAL SECTION
2"=1'–0"
SERIES 3000 (SX–SO)
SEE HORIZONTAL SECTION
10/11

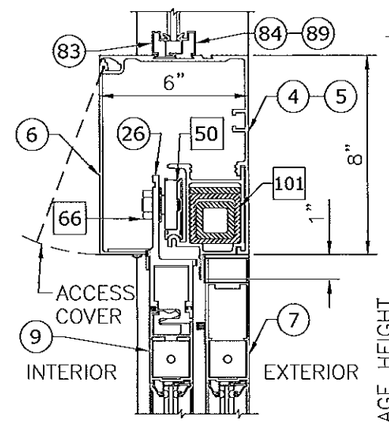

5A VERTICAL SECTION
2"=1'–0" BI–PARTING
HEADER REINFORCING DETAIL
WITH TRANSOM

SERIES 3000
(SO–SX–SX–SO)
SEE HORIZONTAL SECTION
9/11

SEE HEAD ANCHORS SHEET 7, AND THRESHOLD ANCHORS SHEET 12. THRESHOLD ANCHORS APPLICABLE ONLY TO 3KSI CONCRETE.

NOTE: SEE SHEET 7 FOR ANCHOR SCHEDULE AND ALLOWABLE ANCHOR TYPES

WITH TRANSOM

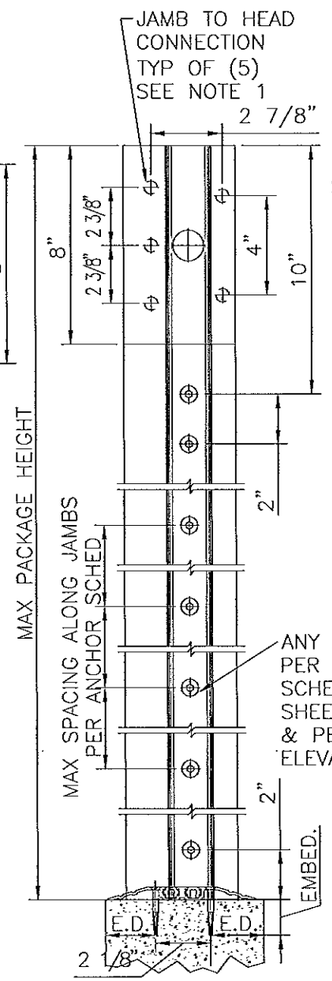

FRAME ANCHORING
N.T.S.
SERIES 3000
(SO–SX–SX–SO) OR (SX–SO)
SEE HORIZONTAL SECTIONS
9/11 & 10/11 RESPECTIVELY

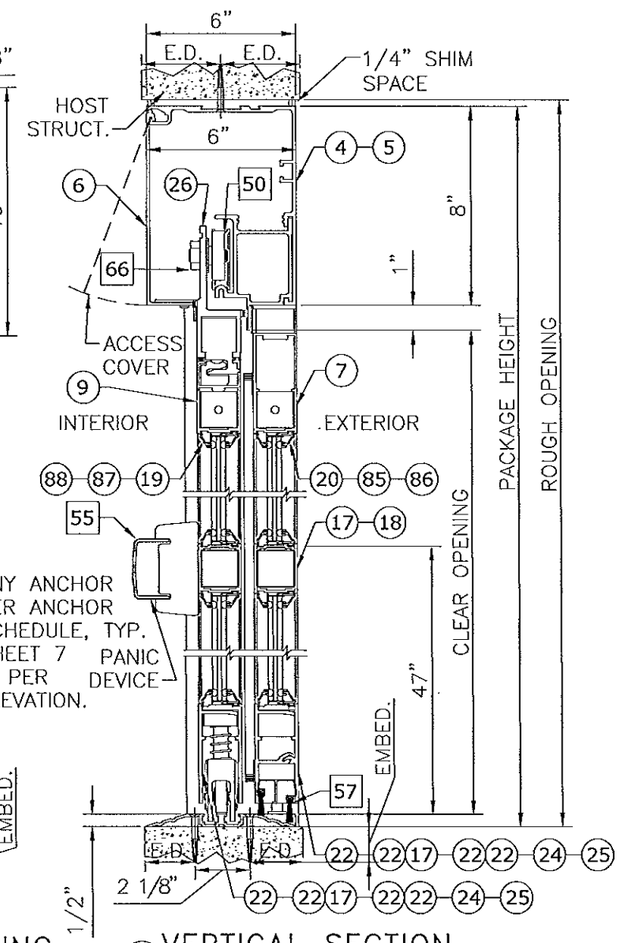

6 VERTICAL SECTION
2"=1'–0"
SERIES 3000 (SO–SX–SX–SO)
OR (SX–SO)
SEE HORIZONTAL SECTIONS
9/11 & 10/11 RESPECTIVELY

WITHOUT TRANSOM

NOTES
1. JAMB TO HEAD CONNECTION FASTENERS; 5/16–18 HHMS WITH WASHER.
2. SEE SHEET 14 FOR STACKED BOTTOM RAIL OPTIONS.

PRODUCT REVISED
as complying with the Florida Building Code
Acceptance No. 13-0529.21
Expiration Date 4/11/18
By
Miami Dade Product Control

FRANK L. BENNARDO LICENSE No. 46549 STATE OF FLORIDA PROFESSIONAL ENGINEER
FRANK L. BENNARDO, P.E. #PE0046549
10/22/2013

ENGINEERING EXPRESS®
160 SW 12th AVENUE, #106
DEERFIELD BEACH, FL 33442
Ph: (954) 354-0660 Fax: (954) 354-0443
WWW.ENGEXP.COM
CERT OF AUTH #9885
A. FRANK L. BENNARDO, P.E., INC. INNOVATION

STANLEY
ACCESS TECHNOLOGIES
65 SCOTT SWAMP ROAD, FARMINGTON, CT 06032

SERIES "DURA-STORM 2000/3000" AUTO SGD
BI-PARTING/SINGLE SLIDE (NI)
MIAMI-DADE NOTICE OF ACCEPTANCE

REMARKS	DRWN	CHKD	DATE
INIT ISSUE	KL	FLB	07/01/12
REVIEWER COMMENT	KL	FLB	11/26/12
ADD'L COMMENTS	KL	FLB	01/28/13
ADD'L COMMENTS	KL	FLB	03/22/13
ADD'L COMMENTS	KL	FLB	04/01/13
REV. PER TESTING	KL	FLB	07/17/13
ADD'L COMMENTS	KL	FLB	08/07/13
ADD'L COMMENTS	KL	FLB	10/03/13

12-SAT-15
SCALE: - 07
PAGE DESCRIPTION:

DURA-STORM SERIES 2000/3000 HORIZONTAL SECTIONS & ANCHORING

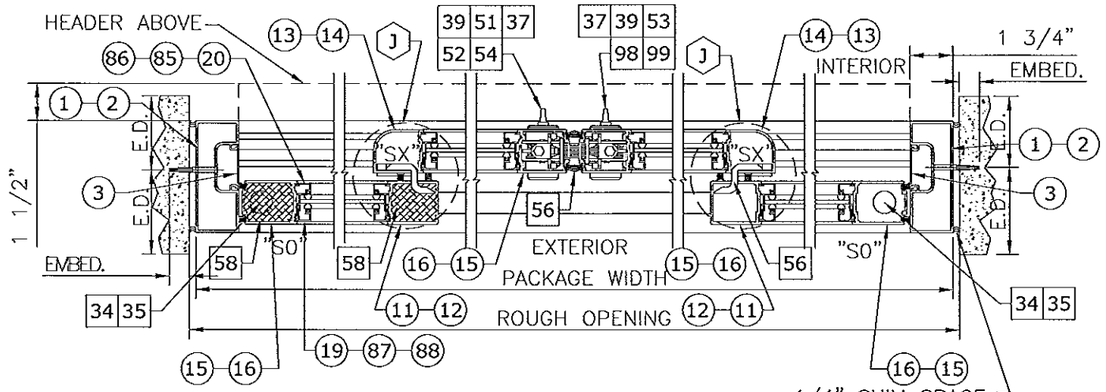

7 SERIES 3000, STANDARD LOCK
2"=1'-0" BI-PARTING

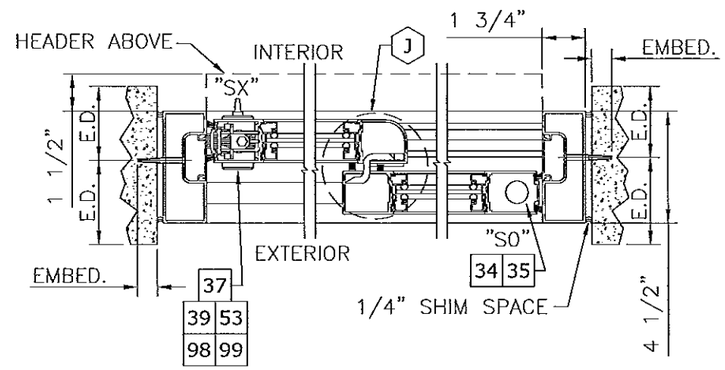

8 SERIES 3000, STANDARD LOCK
2"=1'-0" SINGLE SLIDE

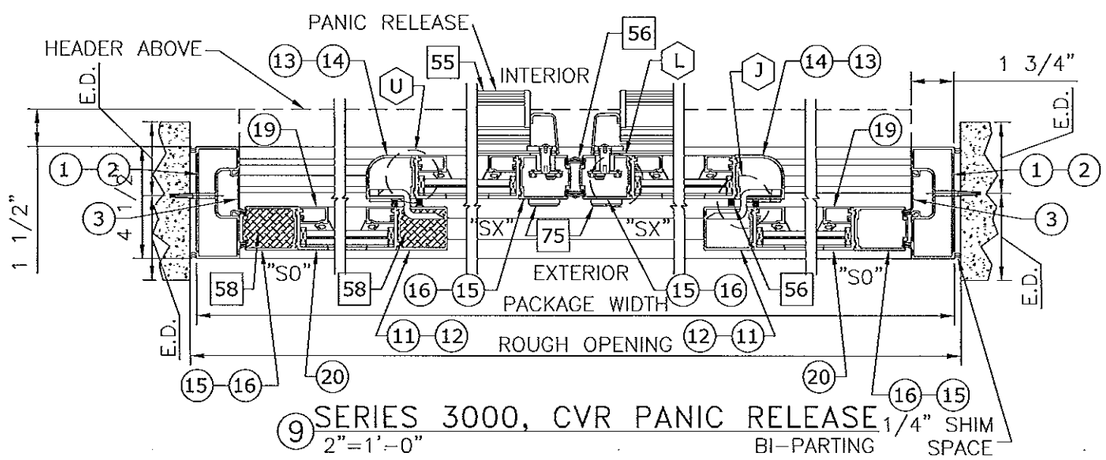

9 SERIES 3000, CVR PANIC RELEASE
2"=1'-0" BI-PARTING

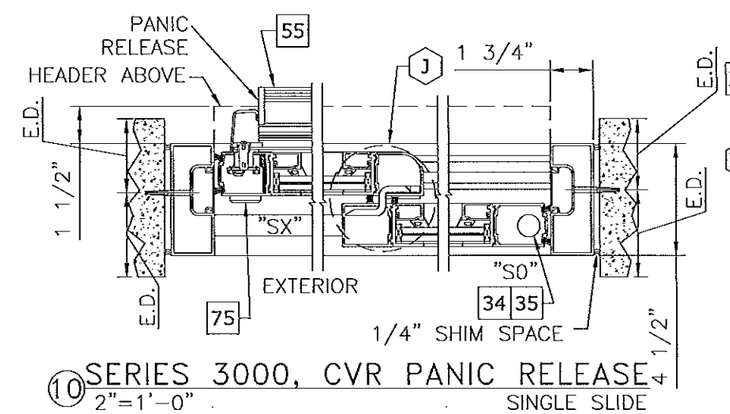

10 SERIES 3000, CVR PANIC RELEASE
2"=1'-0" SINGLE SLIDE

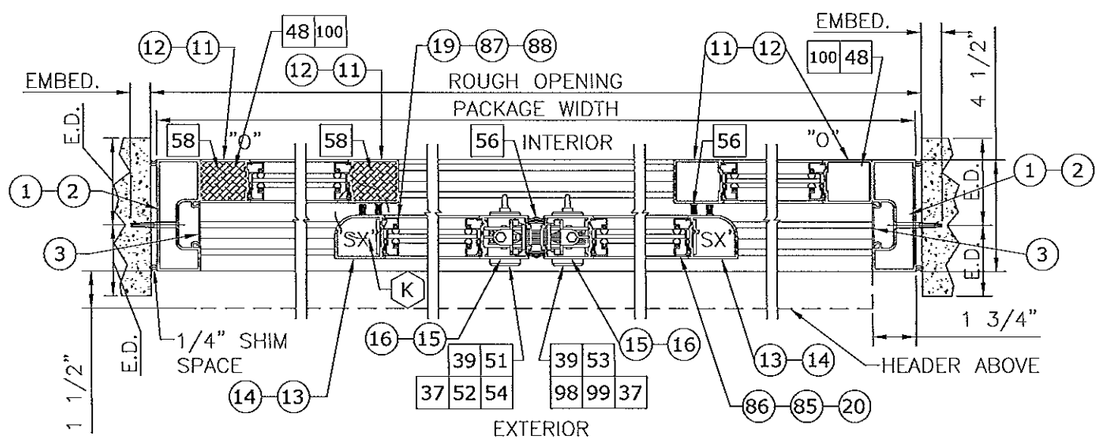

11 SERIES 2000, STANDARD LOCK
2"=1'-0" BI-PARTING

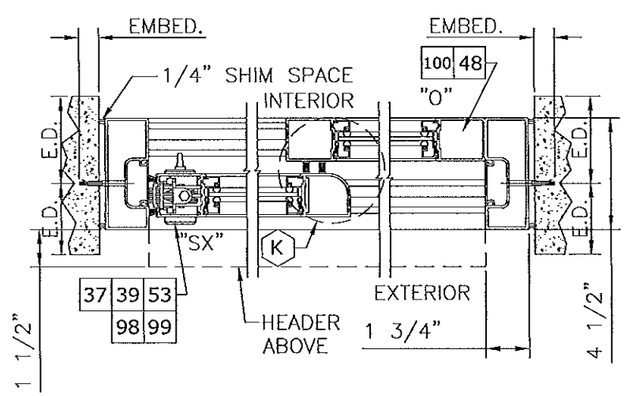

12 SERIES 2000, STANDARD LOCK
2"=1'-0" SINGLE SLIDE

(XX) : EXTRUSION
(XX)(XX) : EXTRUSION, MULTI-PIECE
(XX)-(XX) : EXTRUSION, OPTION
[XX] : PART
[XX][XX] : PART, MULTI-PIECE
[XX]-[XX] : PART, OPTION
⟨XX⟩ : DETAIL
⟨XX⟩-⟨XX⟩ : DETAIL, OPTION

PRODUCT REVISED
in complying with the Florida Building Code
Acceptance No. 13-0529.21
Expiration Date 4/11/18
By
Miami Dade Product Control

SEE HEAD ANCHORS SHEET 7, AND THRESHOLD ANCHORS SHEET 12. THRESHOLD ANCHORS APPLICABLE ONLY TO 3KSI CONCRETE.

FRANK L. BENNARDO, P.E. #PE0046549
LICENSED PROFESSIONAL ENGINEER No. 46549 STATE OF FLORIDA
10/22/2013

ENGINEERING EXPRESS®
160 SW 12th AVENUE, #106
DEERFIELD BEACH, FL 33442
Ph: (954) 354-0660 Fax: (954) 354-0443
WWW.ENGEXP.COM
CERT OF AUTH #2885
A. FRANK L. BENNARDO, P.E., INC. INNOVATION

STANLEY ACCESS TECHNOLOGIES
65 SCOTT SWAMP ROAD, FARMINGTON, CT 06032

SERIES "DURA-STORM 2000/3000" AUTO SGD
BI-PARTING/SINGLE SLIDE (NI)
MIAMI-DADE NOTICE OF ACCEPTANCE

REMARKS	DRWN	CHKD	DATE
INIT ISSUE	KL	FLB	07/01/12
REVIEWER COMMENT	KL	FLB	11/26/12
ADD'L COMMENTS	KL	FLB	01/28/13
ADD'L COMMENTS	KL	FLB	03/22/13
ADD'L COMMENTS	KL	FLB	04/01/13
REV. PER TESTING	KL	FLB	07/17/13
ADD'L COMMENTS	KL	FLB	08/07/13
ADD'L COMMENTS	KL	FLB	10/03/13

12-SAT-15
SCALE: - 07
PAGE DESCRIPTION:

DURA-STORM SERIES 2000/3000 THRESHOLDS & ANCHORING

NOTE: USE CONCRETE ANCHOR PER ANCHOR SCHEDULE FOR ALL THRESHOLD ANCHORAGE DETAILS SHOWN HEREIN. SEE SHEET 7 FOR ANCHOR SCHEDULE AND ALLOWABLE CONCRETE ANCHOR TYPES

SEE HEAD ANCHORS SHEET 7, AND JAMB ANCHORS SHEETS 8 THROUGH 10.

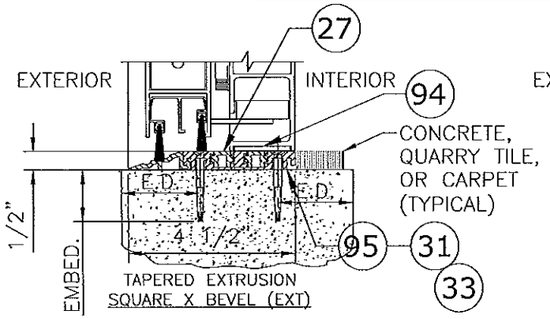

THRESHOLD–TAPERED EXT
3"=1'–0" 2000

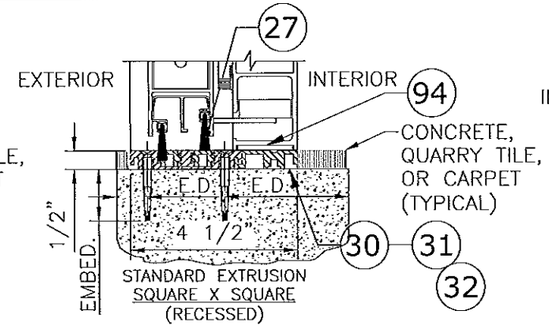

THRESHOLD–SQUARE
3"=1'–0" 2000

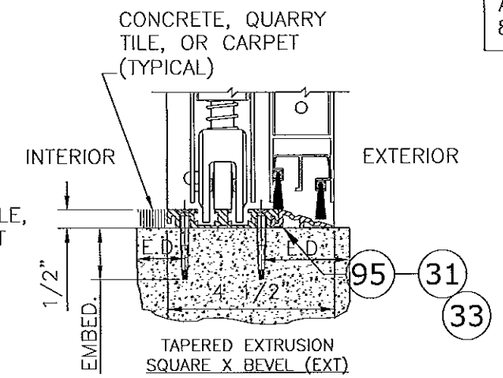

THRESHOLD–TAPERED EXT
3"=1'–0" 3000

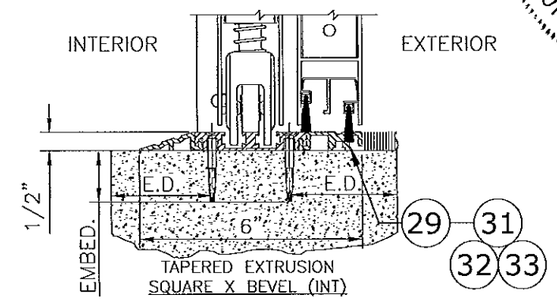

THRESHOLD–TAPERED INT
3"=1'–0" 3000

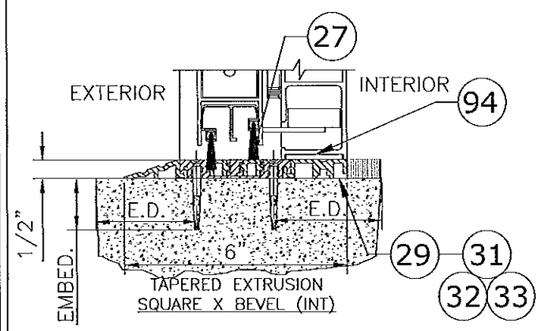

THRESHOLD–TAPERED INT
3"=1'–0" 2000

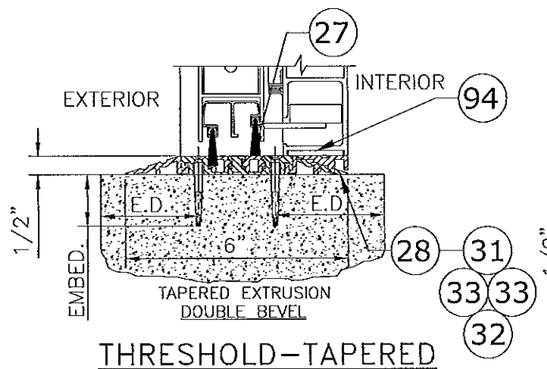

THRESHOLD–TAPERED
3"=1'–0" 2000

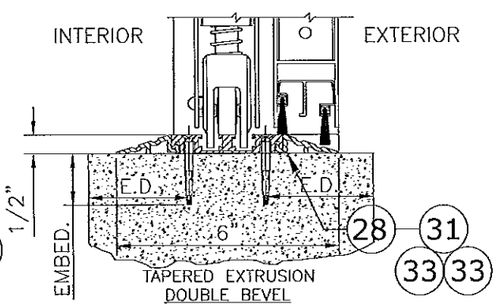

THRESHOLD–TAPERED
3"=1'–0" 3000

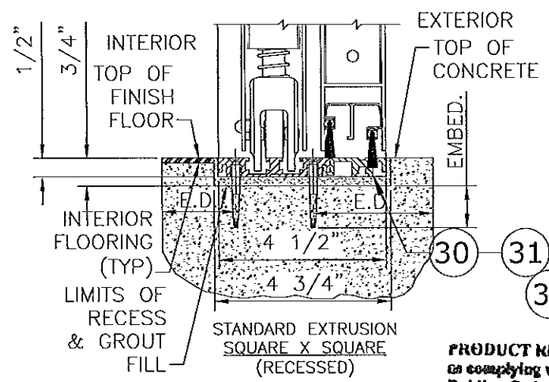

THRESHOLD–SQUARE
3"=1'–0" 3000

PRODUCT REVISED
to complying with the Florida Building Code
Acceptance No 13-0529.21
Expiration Date 9/17/13
By [illegible]
Miami-Dade Product Control

CLUSTER OF ANCHORS IN (2) ROWS CENTERED AT PANEL OVERLAP. QUANTITY PER CLUSTER PER ANCHOR SCHEDULE, ANCHORS IN CLUSTER SPACED 3" O.C. ALONG ROW, TYP.

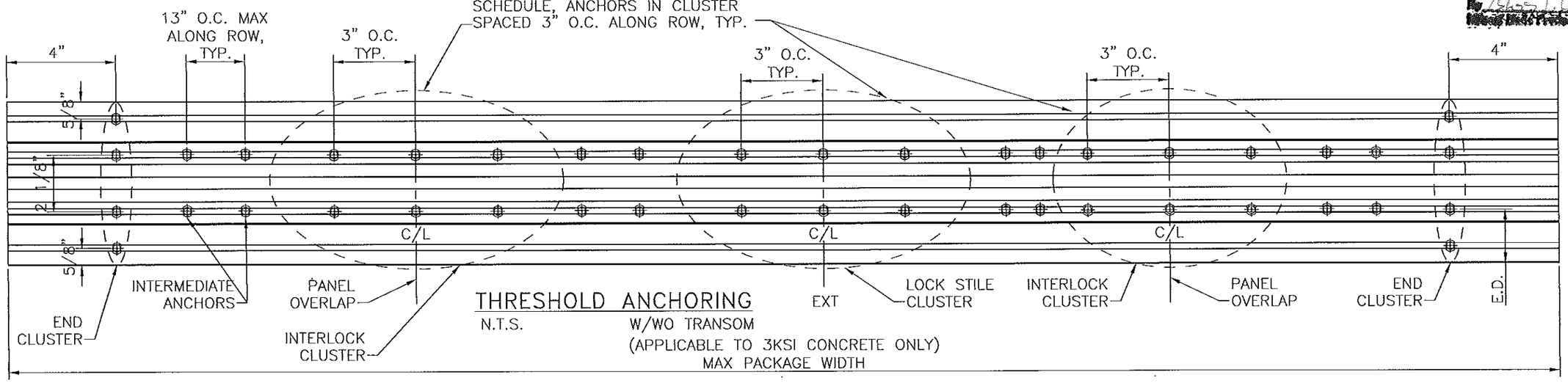

THRESHOLD ANCHORING
N.T.S. W/WO TRANSOM
(APPLICABLE TO 3KSI CONCRETE ONLY)
MAX PACKAGE WIDTH

FRANK L. BENNARDO, P.E. #PE0046149
LICENSE No. 46549 10/22/2013
STATE OF FLORIDA
PROFESSIONAL ENGINEER

ENGINEERING EXPRESS, INC.
160 SW 12th AVENUE, #206
DEERFIELD BEACH, FL 33442
Ph: (954) 354-0660 Fax: (954) 354-0443
WWW.ENGEXP.COM
CERT OF AUTH #9885
A. FRANK L. BENNARDO, P.E., INC. INNOVATION

STANLEY
ACCESS TECHNOLOGIES
65 SCOTT SWAMP ROAD, FARMINGTON, CT 06032

SERIES "DURA-STORM 2000/3000" AUTO SGD
BI-PARTING/SINGLE SLIDE (NI)
MIAMI-DADE NOTICE OF ACCEPTANCE

REMARKS	DRWN	CHKD	DATE
INIT ISSUE	KL	FLB	07/01/12
REVIEWER COMMENT	KL	FLB	11/26/12
ADD'L COMMENTS	KL	FLB	01/28/13
ADD'L COMMENTS	KL	FLB	03/22/13
ADD'L COMMENTS	KL	FLB	04/01/13
REV. PER TESTING	KL	FLB	07/17/13
ADD'L COMMENTS	KL	FLB	08/07/13
ADD'L COMMENTS	KL	FLB	10/03/13

12-SAT-15
SCALE: - 07
PAGE DESCRIPTION:

12 19

DURA-STORM SERIES 2000/3000 EXTRUSIONS

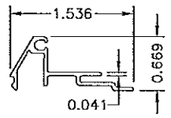

(20) 1/4" GUTTER
N.T.S. 6063-T6
HORIZONTAL

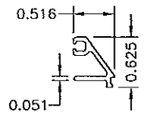

(19) 1/4" STOP
N.T.S. 6063-T6
HORIZONTAL

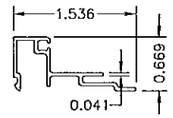

(85) 1/4" GUTTER
N.T.S. 6063-T6
VERTICAL

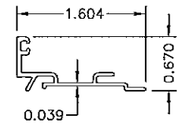

(86) IG GUTTER
N.T.S. 6063-T6

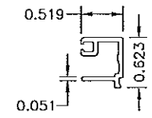

(87) 1/4" STOP
N.T.S. 6063-T6
VERTICAL

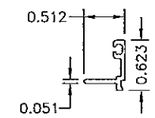

(88) IG STOP
N.T.S. 6063-T6

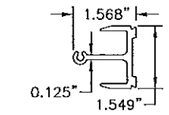

(79) PANIC MUNTIN CLIP
N.T.S. 6063-T6

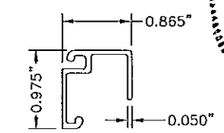

(81) TRANSOM FRAME
N.T.S. 6063-T6

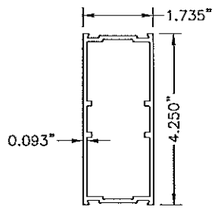

(18) MUNTIN BAR
N.T.S. 6063-T6

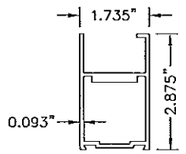

(9) TOP RAIL, SX
N.T.S. 3000 6063-T6

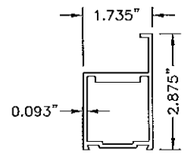

(10) TOP RAIL, SX
N.T.S. 2000 6063-T6

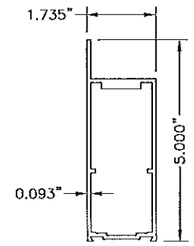

(7) TOP RAIL, SO
N.T.S. 3000 6063-T6

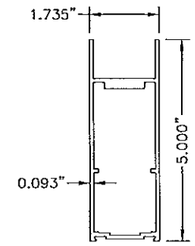

(8) TOP RAIL, O
N.T.S. 2000 6063-T6

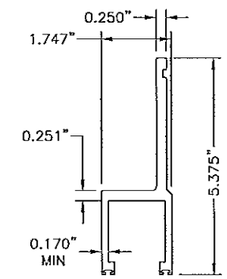

(26) HANGER
N.T.S. 6063-T6

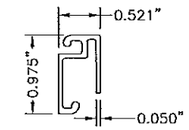

(82) TRANSOM VERT.
N.T.S. 6063-T6

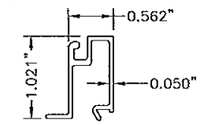

(83) TRANSOM STOP
N.T.S. 6063-T6
HEADER

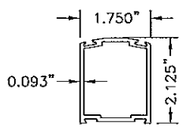

(15) STILE LEAD (NARROW)
N.T.S. 6063-T6

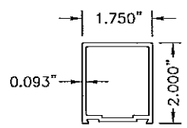

(11) STILE FIXED (NARROW)
N.T.S. 6063-T6

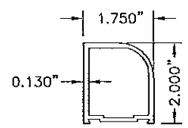

(13) STILE PIVOT (NARROW)
N.T.S. 6063-T6

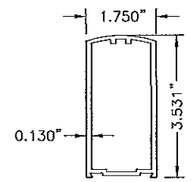

(12) STILE LEAD (MEDIUM)
N.T.S. 6063-T6

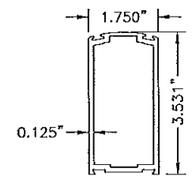

(16) STILE LOCK (MEDIUM)
N.T.S. 6063-T6

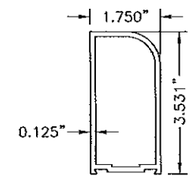

(14) STILE PIVOT (MEDIUM)
N.T.S. 6063-T6

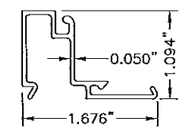

(84) TRANSOM 1/4" GUTTER
N.T.S. 6063-T6
HEADER

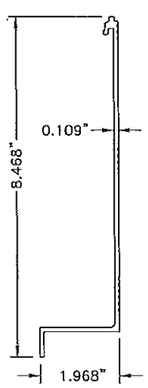

(6) HEADER COVER
N.T.S. 6063-T6

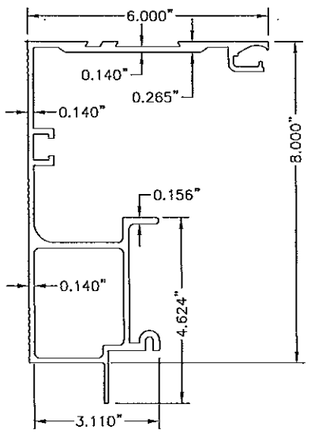

(4) HEADER
N.T.S. 6063-T6

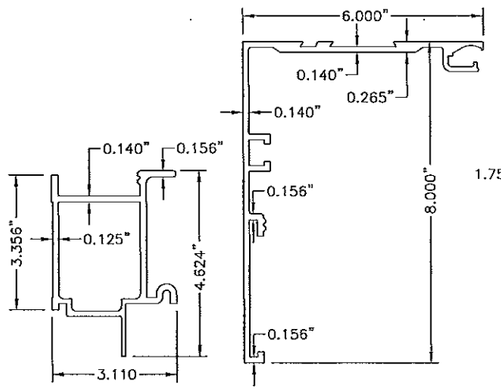

(5) HEADER (2 PC.)
N.T.S. 6063-T6

PRODUCT REVIEWED
In complying with the Florida
Building Code
Acceptance No. B-03321
Expiration Date 4/11/13
By
Miami-Dade Product Control

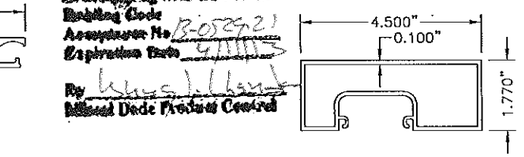

(1) JAMB 4 1/2
N.T.S. 6063-T6

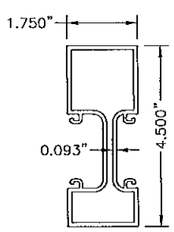

(80) TRANSOM VERT.
N.T.S. 6063-T6

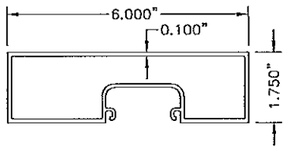

(2) JAMB 6
N.T.S. 6063-T6

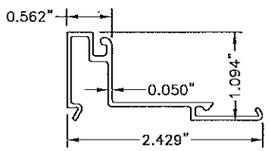

(89) TRANSOM IG GUTTER
N.T.S. 6063-T6
HEADER

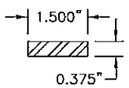

(74) STEEL PANIC REINFORCING
N.T.S. ASTM A-36

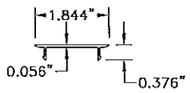

(3) JAMB INSERT
N.T.S. 6063-T6

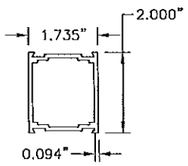

(17) MUNTIN BAR
N.T.S. 6063-T6

FRANK L. BENNARDO
LICENSE
No. 46549
STATE OF FLORIDA
PROFESSIONAL ENGINEER
10/22/2013

FRANK L. BENNARDO, P.E.
LIC. #46549
ENGINEERING EXPRESS
160 SW 12th AVENUE, #206
DEERFIELD BEACH, FL 33442
Ph: (954) 354-0660 Fax: (954) 354-0443
WWW.ENGEXP.COM
CERT OF AUTH #0985
A. FRANK L. BENNARDO, P.E., INC. INNOVATION

STANLEY
ACCESS TECHNOLOGIES
65 SCOTT SWAMP ROAD, FARMINGTON, CT 06032

SERIES "DURA-STORM 2000/3000" AUTO SGD
BI-PARTING/SINGLE SLIDE (NI)
MIAMI-DADE NOTICE OF ACCEPTANCE

REMARKS	DRWN	CHKD	DATE
INIT ISSUE	KL	FLB	07/01/12
REVIEWER COMMENT	KL	FLB	11/26/12
ADD'L COMMENTS	KL	FLB	01/28/13
ADD'L COMMENTS	KL	FLB	03/22/13
ADD'L COMMENTS	KL	FLB	04/01/13
REV. PER TESTING	KL	FLB	07/17/13
ADD'L COMMENTS	KL	FLB	08/07/13
ADD'L COMMENTS	KL	FLB	10/03/13

12-SAT-15
SCALE: - 07
PAGE DESCRIPTION:

19

13

DURA-STORM SERIES 2000/3000 EXTRUSIONS

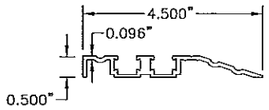

95 COMPONENT THRESHOLD
N.T.S. 6063-T6

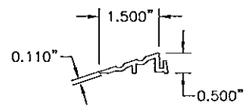

33 COMPONENT THRESHOLD
N.T.S. 6063-T6

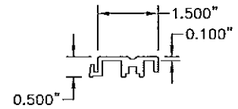

32 COMPONENT THRESHOLD
N.T.S. 6063-T6

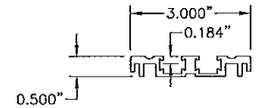

31 COMPONENT THRESHOLD
N.T.S. 6063-T6

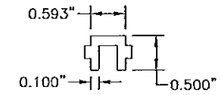

27 THRESHOLD FILLER
N.T.S. 6063-T6

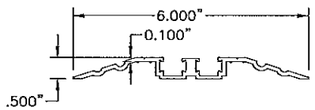

28 ALT THRESHOLD
N.T.S. 6063-T6

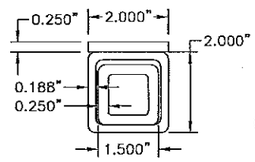

101 NESTED TRANSOM STIFFENER
N.T.S. BI-PARTING ASTM A500

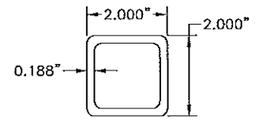

73 TRANSOM STIFFENER
N.T.S. SINGLE SLIDE ASTM A500

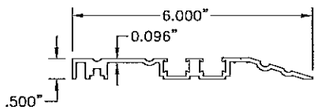

29 ALT THRESHOLD
N.T.S. 6063-T6

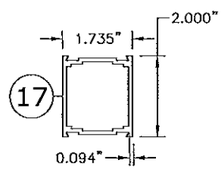

MUNTIN BAR
N.T.S. 6063-T6

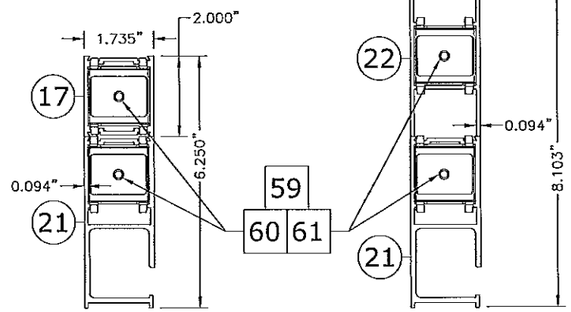

STACKED BOTTOM RAIL, O
N.T.S. 6063-T6

STACKED BOTTOM RAIL, O
N.T.S. 6063-T6

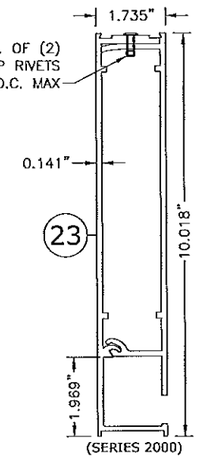

BOTTOM RAIL, O
N.T.S. 2-PIECE 6063-T6

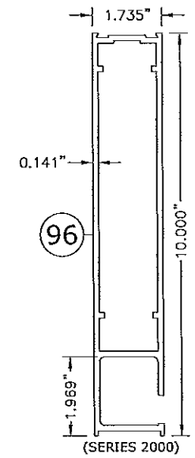

BOTTOM RAIL, O
N.T.S. 1-PIECE 6063-T6

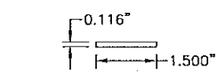

94 KEY STRIP
N.T.S. 6063-T6

BOTTOM RAIL, O
N.T.S. 6063-T6

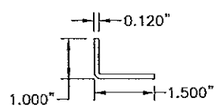

48 BRACKET
N.T.S. 6063-T6

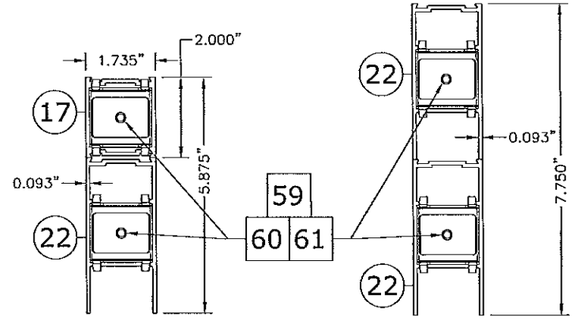

STACKED BOTTOM RAIL, SX/SO
N.T.S. 6063-T6

STACKED BOTTOM RAIL, SX/SO
N.T.S. 6063-T6

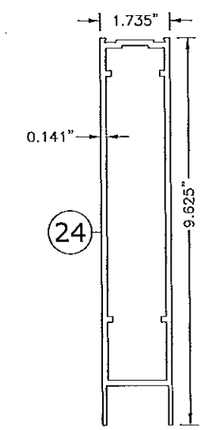

BOTTOM RAIL, SX/SO
N.T.S. 1-PIECE 6063-T6

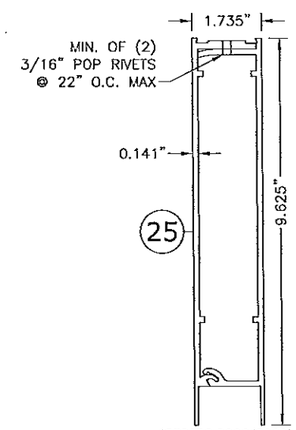

BOTTOM RAIL, SX/SO
N.T.S. 2-PIECE 6063-T6

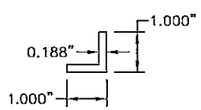

100 ANGLE
N.T.S. 6063-T6

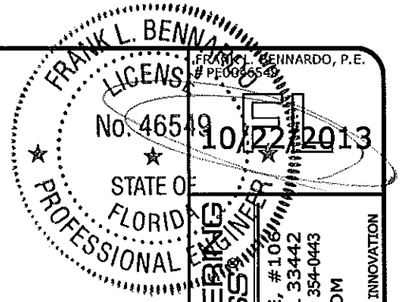

FRANK L. BENNARDO, P.E.
PE0046549
10/22/2013

ENGINEERING EXPRESS
160 SW 12th AVENUE, #106
DEERFIELD BEACH, FL 33442
Ph: (954) 354-0660 Fax: (954) 354-0443
WWW.ENGEXP.COM
CERT OF AUTH #9885
A. FRANK L. BENNARDO, P.E., INC. INNOVATION

STANLEY
ACCESS TECHNOLOGIES
65 SCOTT SWAMP ROAD, FARMINGTON, CT 06032

SERIES "DURA-STORM 2000/3000" AUTO SGD
BI-PARTING/SINGLE SLIDE (NI)
MIAMI-DADE NOTICE OF ACCEPTANCE

REMARKS	DRWN	CHKD	DATE
INIT ISSUE	KL	FLB	07/01/12
REVIEWER COMMENT	KL	FLB	11/26/12
ADD'L COMMENTS	KL	FLB	01/28/13
ADD'L COMMENTS	KL	FLB	03/22/13
ADD'L COMMENTS	KL	FLB	04/01/13
REV. PER TESTING	KL	FLB	07/17/13
ADD'L COMMENTS	KL	FLB	08/07/13
ADD'L COMMENTS	KL	FLB	10/03/13

PRODUCT REVISED
as complying with the Florida Building Code
Acceptance No. 13-0529.21
Expiration Date 4/11/18
By [signature]
Miami Dade Product Control

12-SAT-15
SCALE: - 07
PAGE DESCRIPTION:

DURA-STORM SERIES 2000/3000 DETAILS

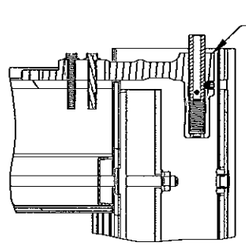

A SO PIVOT TOP NTS SERIES 3000

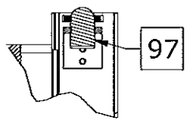

Q SO PANEL BALL DETENT TOP NTS SERIES 3000

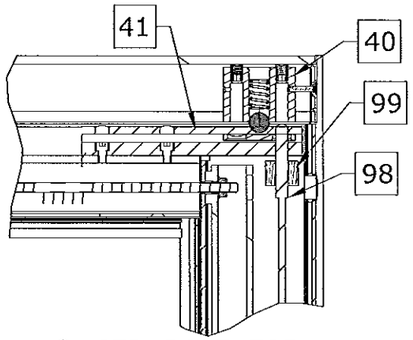

F STD BOLT TOP NTS SERIES 2000/3000

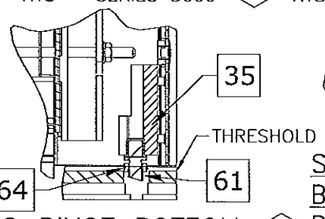

B SO PIVOT BOTTOM NTS SERIES 3000

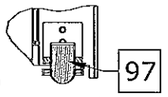

R SO PANEL BALL DETENT BOTTOM NTS SERIES 3000

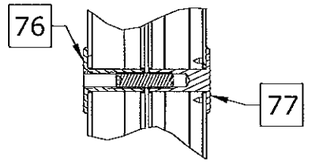

X SX/O WIND CLIP NTS SERIES 2000

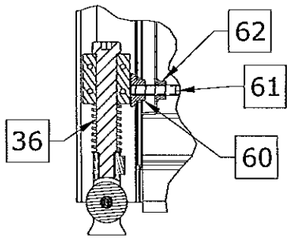

C SX GUIDE/PIVOT BOTTOM NTS SERIES 3000

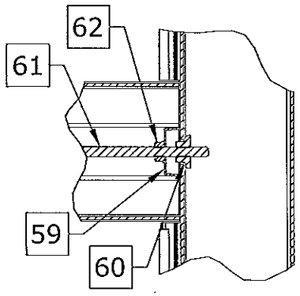

N MUNTIN DETAIL NTS SERIES 2000/3000

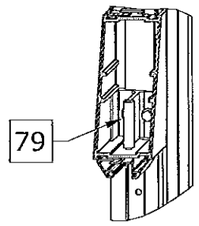

V PANIC MUNTIN DETAIL NTS SERIES 3000

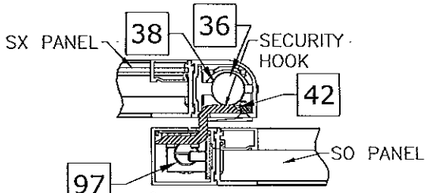

J SECURITY HOOK NTS SERIES 3000

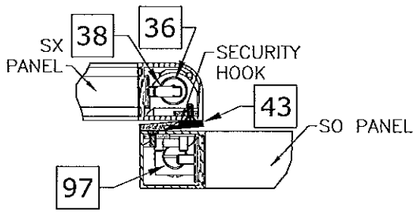

M SECURITY HOOK 1" GLASS NTS SERIES 3000

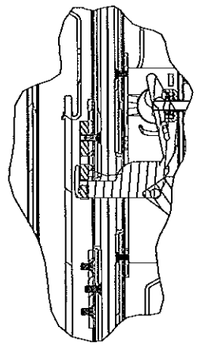

P 3-POINT LATCH DETAIL NTS SERIES 2000/3000

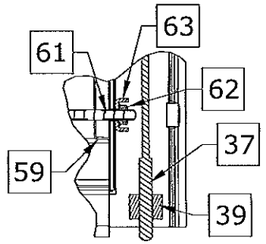

E STD BOLT BOTTOM NTS SERIES 2000/3000

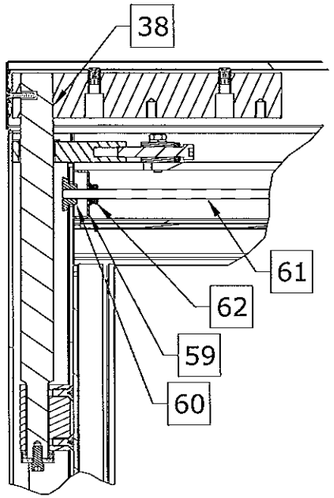

D SX PIVOT TOP NTS SERIES 2000/3000

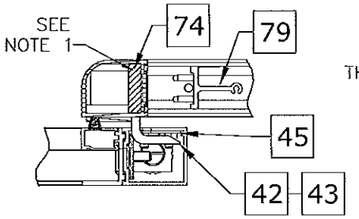

U PANIC REINFORCING NTS 3000

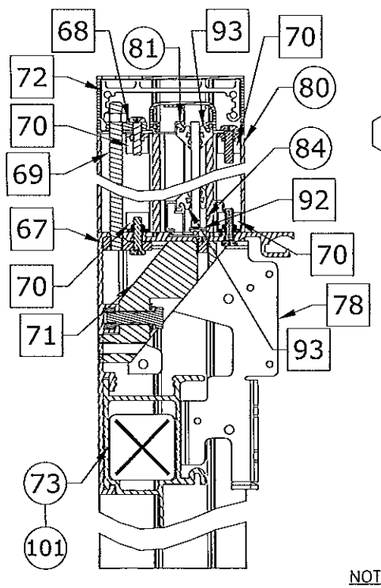

W TRANSOM DETAIL NTS SERIES 2000/3000

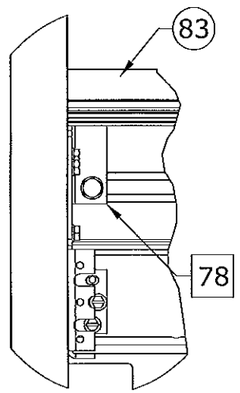

S TRANSOM CORNER NTS SERIES 2000/3000

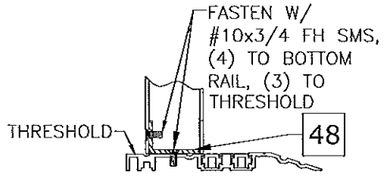

I O-PANEL BRACKET NTS SERIES 2000

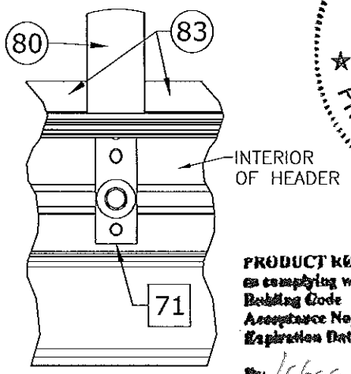

T TRANSOM MUNTIN NTS SERIES 2000/3000

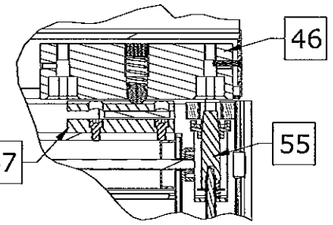

G PANIC BOLT TOP NTS 3000

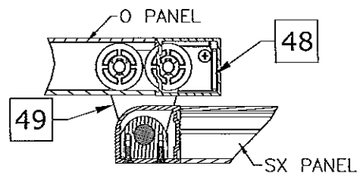

K SX GUIDE/PIVOT BOTTOM NTS SERIES 2000 (O-SX INTERLOCK)

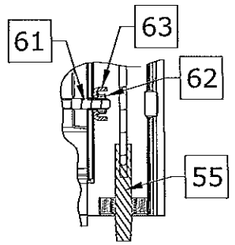

H PANIC BOLT BOTTOM NTS 3000

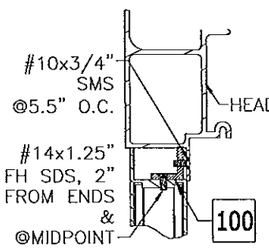

O O PANEL ANGLE NTS SERIES 2000

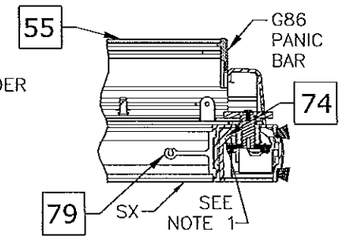

L PANIC REINFORCING NTS 3000

NOTES

1. ITEM 74, "STEEL PLATE-PANIC REINFORCING", IS CONTAINED WITHIN VERTICAL STILE, HAS A MINIMUM LENGTH OF 48", AND IS CENTERED VERTICALLY ABOUT CENTERLINE OF HORIZONTAL MUNTIN. ITEM 74 IS FASTENED AS FOLLOWS: SINGLE ROW #10 X 32 X 1/2" FHTCMS @ 6" OC.

PRODUCT REVISED
as complying with the Florida Building Code
Acceptance No. 13-0529.21
Expiration Date 5/11/18
By Michael Hardy Product Control

FRANK L. BENNARDO, LICENSE No. 46549, STATE OF FLORIDA, PROFESSIONAL ENGINEER
10/22/2013

FRANK L. BENNARDO, P.E. #PE0046549
ENGINEERING EXPRESS®
160 SW 12th AVENUE, #106
DEERFIELD BEACH, FL 33442
Ph: (954) 354-0660 Fax: (954) 354-0443
WWW.ENGEXP.COM
CERT OF AUTH #0885
A. FRANK L. BENNARDO, P.E., INC. INNOVATION

STANLEY
ACCESS TECHNOLOGIES
65 SCOTT SWAMP ROAD, FARMINGTON, CT 06032

SERIES "DURA-STORM 2000/3000" AUTO SGD
BI-PARTING/SINGLE SLIDE (NI)
MIAMI-DADE NOTICE OF ACCEPTANCE

REMARKS	DRWN	CHKD	DATE
INIT ISSUE	KL	FLB	07/01/12
REVIEWER COMMENT	KL	FLB	11/26/12
ADD'L COMMENTS	KL	FLB	01/28/13
ADD'L COMMENTS	KL	FLB	03/22/13
ADD'L COMMENTS	KL	FLB	04/01/13
REV. PER TESTING	KL	FLB	07/17/13
ADD'L COMMENTS	KL	FLB	08/07/13
ADD'L COMMENTS	KL	FLB	10/03/13

12-SAT-15

SCALE: - 07

PAGE DESCRIPTION:

DURA-STORM SERIES 2000/3000 TRANSOM GLAZING DETAILS

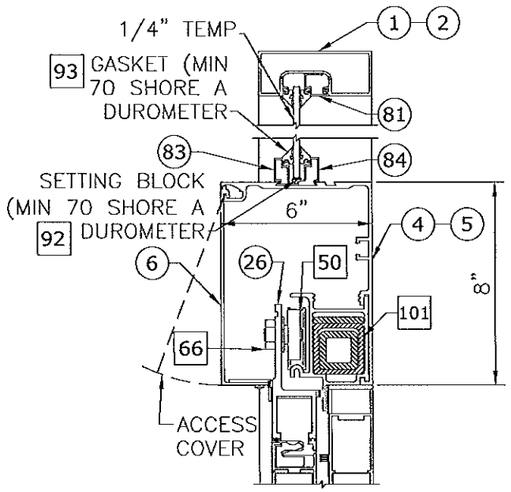

NON-IMPACT TRANSOM GLAZING DETAILS
NTS 1/4" TEMPERED V SECTION BI-PARTING

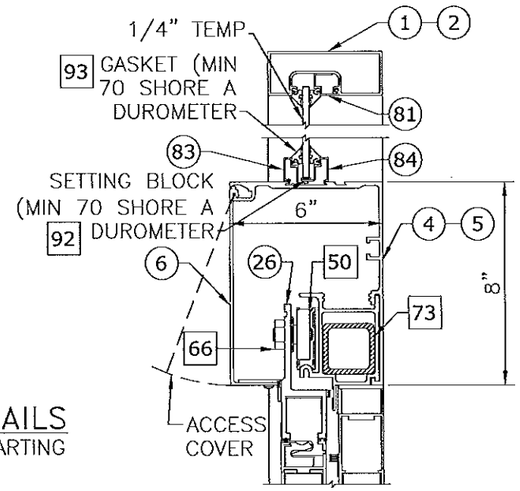

NON-IMPACT TRANSOM GLAZING DETAILS
NTS 1/4" TEMPERED V SECTION SINGLE SLIDE

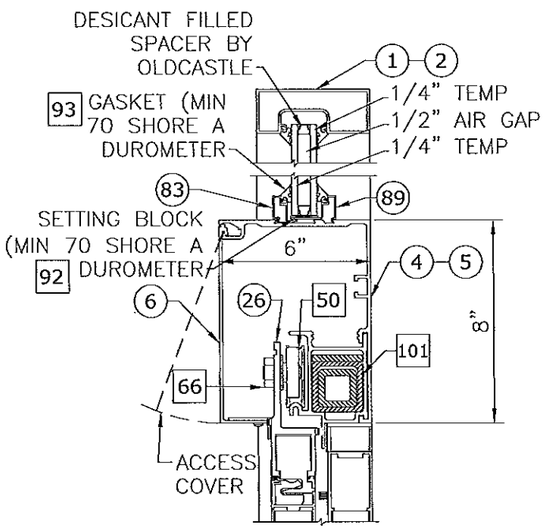

NON-IMPACT TRANSOM GLAZING DETAILS
NTS 1" INSULATED V SECTION BI-PARTING

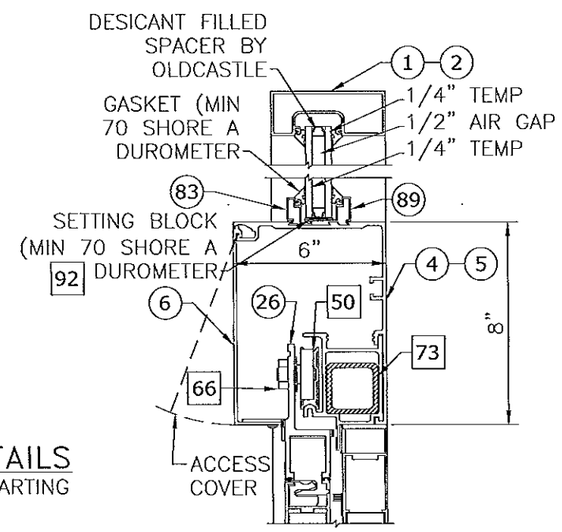

NON-IMPACT TRANSOM GLAZING DETAILS
NTS 1" INSULATED V SECTION SINGLE SLIDE

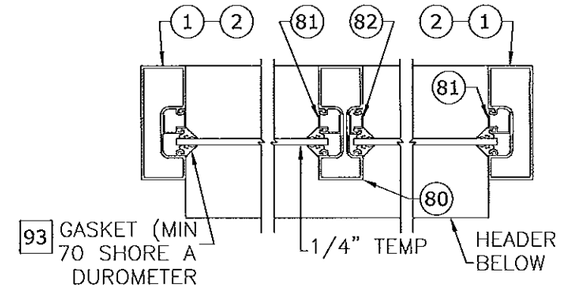

NON-IMPACT TRANSOM GLAZING DETAILS
NTS 1/4" TEMPERED H SECTION SINGLE SLIDE

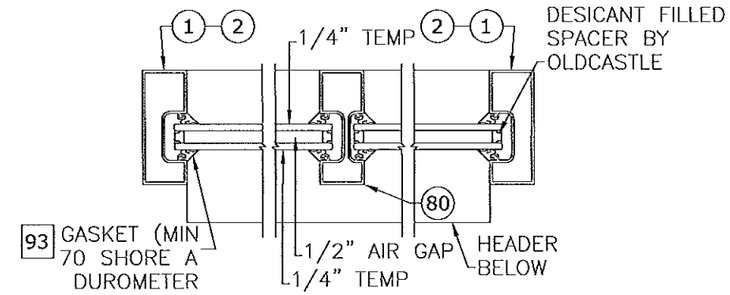

NON-IMPACT TRANSOM GLAZING DETAILS
NTS 1" INSULATED H SECTION SINGLE SLIDE

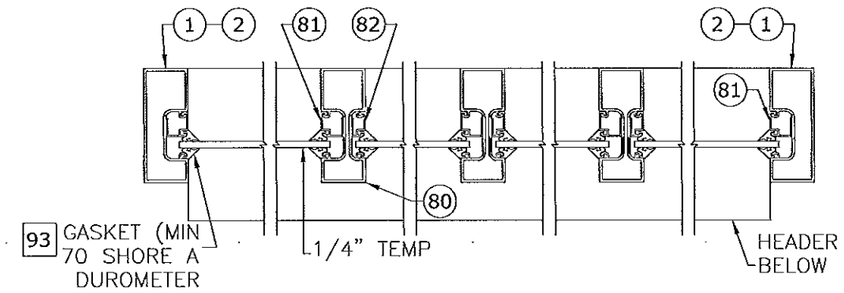

NON-IMPACT TRANSOM GLAZING DETAILS
NTS 1/4" TEMPERED H SECTION BI-PARTING

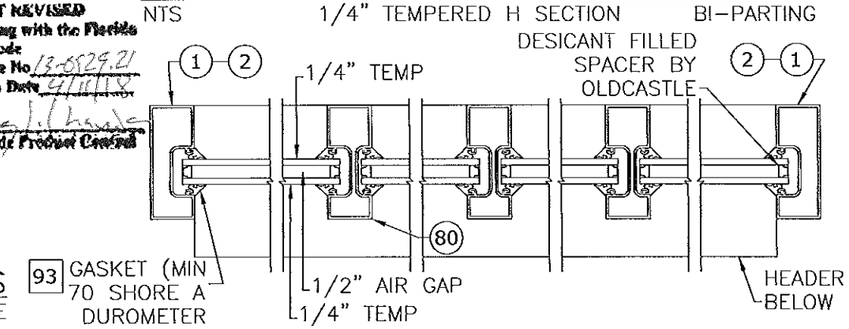

NON-IMPACT TRANSOM GLAZING DETAILS
NTS 1" INSULATED H SECTION BI-PARTING

PRODUCT REVISED
as complying with the Florida Building Code
Acceptance No. 13-0529.21
Expiration Date 4/11/18
By
Miami Dade Product Control

NOTES
1. SEE SHEET 18 FOR DOOR PANEL GLAZING DETAILS.

FRANK L. BENNARDO, P.E.
PE0026548
LICENSE No. 46549
STATE OF FLORIDA
PROFESSIONAL ENGINEER
10/22/2013
ENGINEERING EXPRESS, INC.
160 SW 12th AVENUE, #406
DEERFIELD BEACH, FL 33442
Ph: (954) 354-0660 Fax: (954) 354-0443
WWW.ENGEXP.COM
CERT OF AUTH #9985
A. FRANK L. BENNARDO, P.E., INC. INNOVATION

STANLEY
ACCESS TECHNOLOGIES
65 SCOTT SWAMP ROAD, FARMINGTON, CT 06032

SERIES "DURA-STORM 2000/3000" AUTO SGD
BI-PARTING/SINGLE SLIDE (NI)
MIAMI-DADE NOTICE OF ACCEPTANCE

REMARKS	DRWN	CHKD	DATE
INIT ISSUE	KL	FLB	07/01/12
REVIEWER COMMENT	KL	FLB	11/28/12
ADD'L COMMENTS	KL	FLB	01/28/13
ADD'L COMMENTS	KL	FLB	03/22/13
ADD'L COMMENTS	KL	FLB	04/01/13
REV. PER TESTING	KL	FLB	07/17/13
ADD'L COMMENTS	KL	FLB	08/07/13
ADD'L COMMENTS	KL	FLB	10/03/13

12-SAT-15
SCALE: - 07
PAGE DESCRIPTION:

DURA-STORM SERIES 2000/3000 LOCKING ARRANGEMENTS

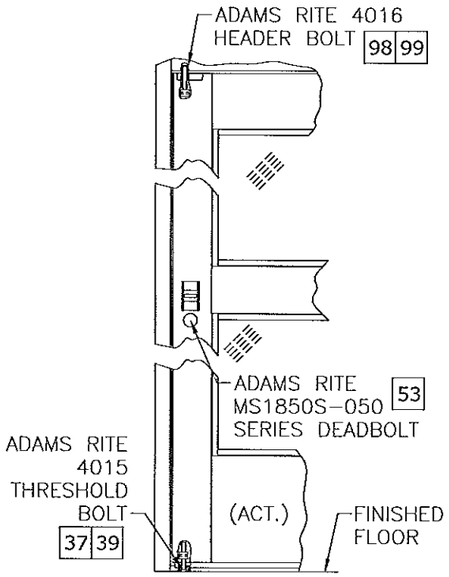

3-PT CONCEALED LOCKING SYSTEM SERIES 2000/3000 SINGLE SLIDE

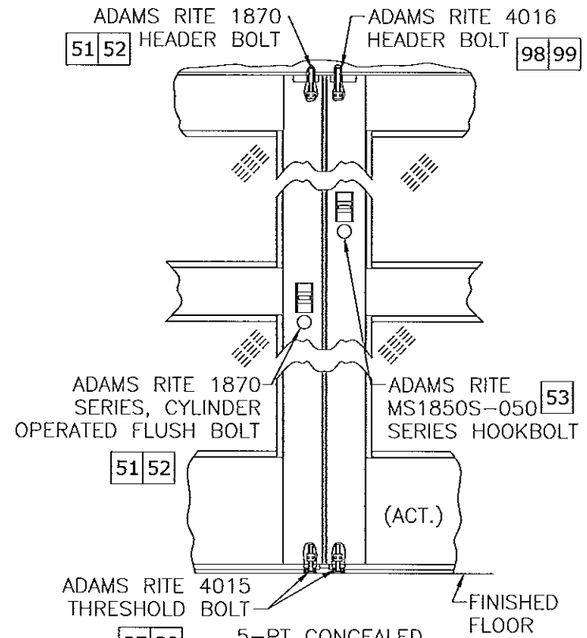

5-PT CONCEALED LOCKING SYSTEM SERIES 2000/3000 BI-PARTING

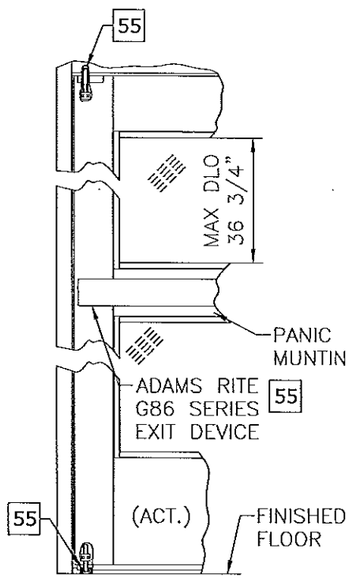

2-PT CONCEALED VERTICAL ROD WITH PANIC RELEASE LOCKING SYSTEM SERIES 3000 SINGLE SLIDE

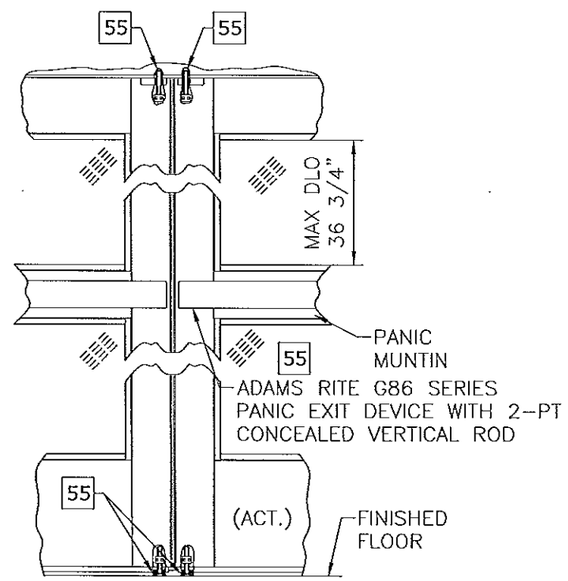

4-PT CONCEALED VERTICAL ROD WITH PANIC RELEASE LOCKING SYSTEM SERIES 3000 BI-PARTING

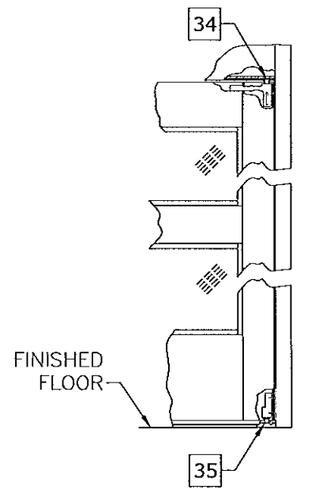

SERIES 3000 SO-PANEL

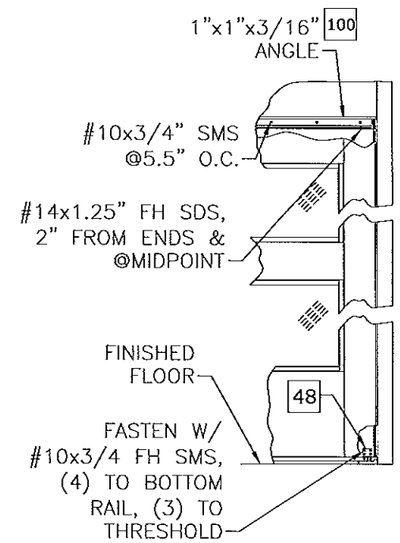

SERIES 2000 O-PANEL

PRODUCT REVISED
as complying with the Florida Building Code
Acceptance No. 13-0529.21
Expiration Date 4/11/18
By [signature]
Miami Dade Product Control

FRANK L. BENNARDO, P.E.
#PE0046549
LICENSE No. 46549
STATE OF FLORIDA
PROFESSIONAL ENGINEER
10/22/2013

ENGINEERING EXPRESS
160 SW 12th AVENUE, #106
DEERFIELD BEACH, FL 33442
PH: (954) 354-0660 FAX: (954) 354-0443
WWW.ENGEXP.COM
CERT OF AUTH #9885
A FRANK L. BENNARDO, P.E., INC. INNOVATION

STANLEY
ACCESS TECHNOLOGIES
65 SCOTT SWAMP ROAD, FARMINGTON, CT 06032

SERIES "DURA-STORM 2000/3000" AUTO SGD
BI-PARTING/SINGLE SLIDE (NI)
MIAMI-DADE NOTICE OF ACCEPTANCE

REMARKS	DRWN	CHKD	DATE
INIT ISSUE	KL	FLB	07/01/12
REVIEWER COMMENT	KL	FLB	11/26/12
ADD'L COMMENTS	KL	FLB	01/28/13
ADD'L COMMENTS	KL	FLB	03/22/13
ADD'L COMMENTS	KL	FLB	04/01/13
REV. PER TESTING	KL	FLB	07/17/13
ADD'L COMMENTS	KL	FLB	08/07/13
ADD'L COMMENTS	KL	FLB	10/03/13

12-SAT-15
SCALE: - 07
PAGE DESCRIPTION:

DURA-STORM SERIES 2000/3000 HORIZONTAL SECTION AND ANCHORING, TRANSOMS

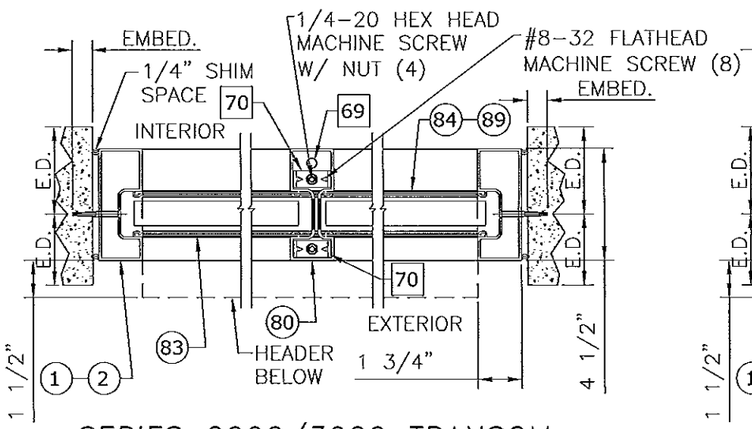

13 SERIES 2000/3000 TRANSOM
2"=1'-0" SINGLE SLIDE

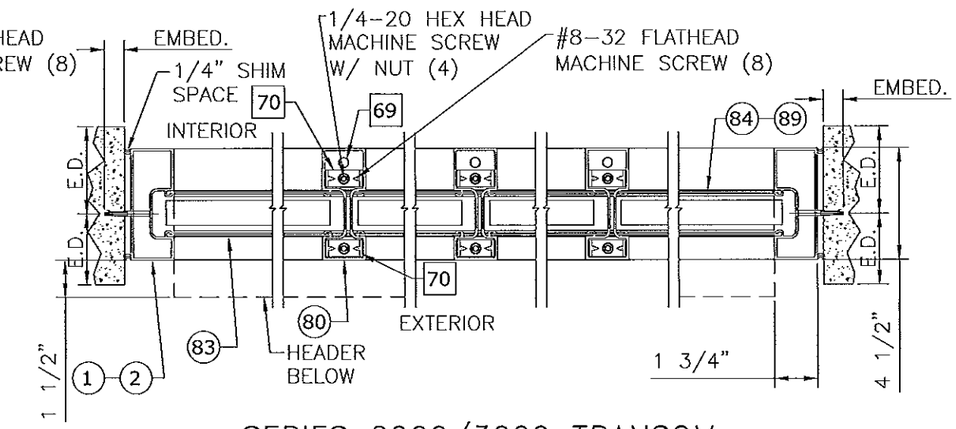

14 SERIES 2000/3000 TRANSOM
2"=1'-0" BI-PARTING

(XX) : EXTRUSION
(XX)(XX) : EXTRUSION, MULTI-PIECE
(XX)-(XX) : EXTRUSION, OPTION
[XX] : PART
[XX][XX] : PART, MULTI-PIECE
[XX]-[XX] : PART, OPTION
⟨XX⟩ : DETAIL
⟨XX⟩-⟨XX⟩ : DETAIL, OPTION

SEE HEAD ANCHORS SHEET 7, AND THRESHOLD ANCHORS SHEET 12. THRESHOLD ANCHORS APPLICABLE ONLY TO 3KSI CONCRETE.

DURA-STORM SERIES 2000/3000 DOOR PANEL GLAZING DETAILS

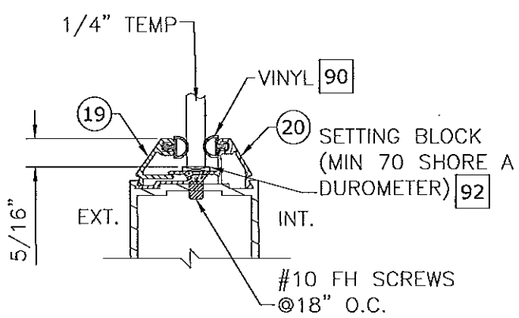

NON-IMPACT DOOR PANEL GLAZING DETAILS
NTS SERIES 2000/3000

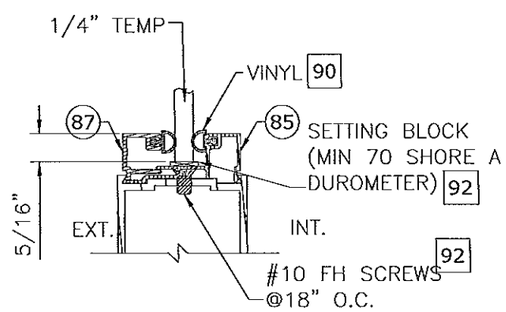

NON-IMPACT DOOR PANEL GLAZING DETAILS
NTS SERIES 2000/3000

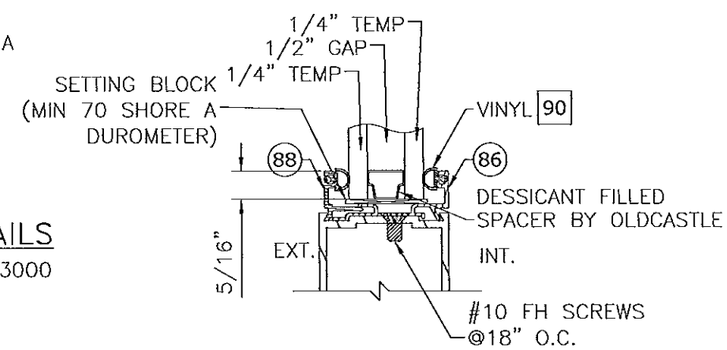

NON-IMPACT DOOR PANEL GLAZING DETAILS
NTS SERIES 2000/3000

NOTES
1. SEE SHEET 16 FOR TRANSOM GLAZING DETAILS.

PRODUCT REVISED
as complying with the Florida Building Code
Acceptance No. 13-0525.11
Expiration Date 4/11/13
By Ishan Chandra
Miami Dade Product Control

FRANK L. BENNARDO, P.E.
#RE0046549
FRANK L. BENNARDO LICENSE No. 46549 STATE OF FLORIDA PROFESSIONAL ENGINEER
10/22/2013

ENGINEERING EXPRESS
160 SW 12th AVENUE, #106
DEERFIELD BEACH, FL 33442
Ph: (954) 354-0660 Fax: (954) 354-0443
WWW.ENGEXP.COM
CERT OF AUTH #6985
A. FRANK L. BENNARDO, P.E., INC. INNOVATION

STANLEY
ACCESS TECHNOLOGIES
65 SCOTT SWAMP ROAD, FARMINGTON, CT 06032

SERIES "DURA-STORM 2000/3000" AUTO SGD
BI-PARTING/SINGLE SLIDE (NI)
MIAMI-DADE NOTICE OF ACCEPTANCE

REMARKS	DRWN	CHKD	DATE
INIT ISSUE	KL	FLB	07/01/12
REVIEWER COMMENT	KL	FLB	11/26/12
ADDL COMMENTS	KL	FLB	01/28/13
ADDL COMMENTS	KL	FLB	03/22/13
ADDL COMMENTS	KL	FLB	04/01/13
REV. PER TESTING	KL	FLB	07/17/13
ADDL COMMENTS	KL	FLB	08/07/13
ADDL COMMENTS	KL	FLB	10/03/13

12-SAT-15
SCALE: - 07
PAGE DESCRIPTION:

DURA-STORM SERIES 2000/3000 BILL OF MATERIALS

BILL OF MATERIALS	
REFERENCE	DESCRIPTION
1	Extrusion - Jamb - 4 1/2"
2	Extrusion - Jamb - 6"
3	Extrusion - Jamb - Insert
4	Extrusion - Header - 1 PC
5	Extrusion - Header - 2 PC
6	Extrusion - Header Cover -
7	Extrusion - Top Rail - O, SO
8	Extrusion - Top Rail - O, SO
9	Extrusion - Top Rail - SX
10	Extrusion - Top Rail - SX
11	Extrusion - Stile - Fixed
12	Extrusion - Stile - Lead
13	Extrusion - Stile - Pivot
14	Extrusion - Stile - Pivot
15	Extrusion - Stile - Lead
16	Extrusion - Stile - Lock
17	Extrusion - Muntin Bar/Stacked Bottom Rail Part - 2"
18	Extrusion - Muntin Bar - 4 1/4"
19	Extrusion - Panel Glass Stop - 1/4" - Horizontal
20	Extrusion - Panel Glass Gutter - 1/4" - Horizontal
21	Extrusion - Bottom Rail O - 4"
22	Extrusion - Bottom Rail SO/SX4"
23	Extrusion - Bottom Rail O - 10" - 2 PC
24	Extrusion - Bottom Rail SX/SO - 1 PC - 10"
25	Extrusion - Bottom Rail SX/SO - 2 PC - 10"
26	Extrusion - Hanger -
27	Extrusion - Threshold - Filler
28	Extrusion - Threshold - Dbl bevel - 6"
29	Extrusion - Threshold - Sq/Bvl - 6"
30	Extrusion - Threshold - Recessed - 4.5"
31	Extrusion - Threshold - Core
32	Extrusion - Threshold - Square
33	Extrusion - Threshold - Bevel
34	Component - Top Pivot - SO - 3000
35	Component - Bottom Pivot - SO - 3000
36	Component - Bottom Guide - SX- 2000/3000
37	Component - Throw Bolt - Std - Adams Rite 4015
38	Component - Top pivot - SX
39	Component - Guide - Throw Bolt - Adams Rite 4015
40	Component - Ball Detent - Std
41	Component - Detent Block - Std
42	Component - Security Hook - Std
43	Component - Security Hook - 1" Glass
45	Component - Backing Plate - Security Hook
46	Component - Ball Detent
47	Component - Detent Block
48	Component - Bracket - O Panel
49	Component - Bottom Guide - SX - 2000
50	Component - Load Wheel - Steel/Aluminum/Plastic
51	Component - Lock - Cylinder - Adams Rite 1870 (2-PT Lock) or Adams Rite MS1850S-050 (3-PT Lock)
52	Component - Lock - Thumb Turn - Adams Rite 1870 (2-PT Lock) or Adams Rite MS1850S-050 (3-PT Lock)

NON-CALL OUT PART # 44 IS NOT PART OF BOM

BILL OF MATERIALS	
REFERENCE	DESCRIPTION
53	Component - 8 Ply Multipoint Lock - Single Action - Adams Rite MS1850S-050 (Deadbolt), Used w/ Adams Rite 4015 and 4016 Bolts
54	Component - Exit Indicator -
55	Component - 2-Pt Panic Device - Adams Rite G86 with concealed vertical rod (top/bottom) and latch assembly.
56	Component - Pile - Adhesive/non Adhesive backed
57	Component - Brush - Sweep
58	Component - Foam Block -
59	Hardware - Tie Rod - Plate
60	Hardware - Tie Rod - Nut - 5/16-18 - Steel
61	Hardware - Threaded Rod - 5/16-18 - Steel
62	Hardware - 5/16 - 18 - Nut - Steel
63	Hardware - Tie Rod / Rail - Plate - Steel
64	Hardware - 7/16-20 Jamb Nut - Steel
65	Hardware - 7/16 SO Pivot Pin - Steel
66	Hardware - 5/8-11 Nut - Steel
67	Hardware - Tie Rod - Nut Plate
68	Hardware - Tie Rod - Top Clip
69	Hardware - Tie Rod - 3/8-16
70	Hardware - Transom Clip - Steel
71	Hardware - Stiffener - Steel - A500
72	Hardware - Transom Clip - Aluminum
73	Tube - Transom Stiffener - Single Slide - Steel (w/ Optional Transom)
74	Component - Steel Plate - Panic Reinforcing (48" Min.)
75	Component - Key Operator - Adams Rite
76	Component - Lock Flange (Int) - "Wind Clip"
77	Component - Lock Flange (Ext) - "Wind Clip"
78	Component - Header End Plate
79	Component - Muntin Clip (with Panic)
80	Extrusion - Transom - Vertical Muntin
81	Extrusion - Transom - Frame Stop - 1/4"
82	Extrusion - Transom - Vertical Muntin Stop - 1/4"
83	Extrusion - Transom - Header Stop
84	Extrusion - Transom - Header Gutter - 1/4"
85	Extrusion - Panel Glass Gutter - 1/4" - Vertical
86	Extrusion - Panel Glass Gutter - 1"
87	Extrusion - Panel Glass Stop - 1/4" - Vertical
88	Extrusion - Panel Glass Stop - 1"
89	Extrusion - Transom - Header Gutter - 1"
90	Glazing - Vinyl Bulb - 0.200"
91	Glazing - Vinyl Bulb - 0.262"
92	Glazing - Setting Block -
93	Glazing - Gasket - Transom
94	Extrusion - Key Strip
95	Extrusion - Threshold - Sq/Bvl - 4.5"
96	Extrusion - Bottom Rail O - 10"
97	Component - Ball Detent - SO
98	Component - Throw Bolt - Std - Adams Rite 4016
99	Component - Guide - Throw Bolt - Adams Rite 4016
100	Extrusion - 1"x1"x3/16" Angle
101	Nested Tube - Transom Stiffener - Bi-Parting - Steel (w/ Optional Transom)

FRANK L. BENNARDO
LICENSE
No. 46549
STATE OF
FLORIDA
PROFESSIONAL ENGINEER

FRANK L. BENNARDO, P.E.
PE0046549
10/22/2013

ENGINEERING EXPRESS
160 SW 12th AVENUE, #106
DEERFIELD BEACH, FL 33442
Ph: (954) 354-0660 Fax: (954) 354-0443
WWW.ENGEXP.COM
CERT OF AUTH #0885
A. FRANK L. BENNARDO, P.E., INC. INNOVATION

PRODUCT REVISED
as complying with the Florida
Building Code
Acceptance No 13-0529.21
Expiration Date APR 11, 2018
By
Miami Dade Product Control

STANLEY
ACCESS TECHNOLOGIES
65 SCOTT SWAMP ROAD, FARMINGTON, CT 06032

SERIES "DURA-STORM 2000/3000" AUTO SGD
BI-PARTING/SINGLE SLIDE (NI)
MIAMI-DADE NOTICE OF ACCEPTANCE

REMARKS	DRWN	CHKD	DATE
INIT ISSUE	KL	FLB	07/01/12
REVIEWER COMMENT	KL	FLB	11/26/12
ADD'L COMMENTS	KL	FLB	01/28/13
ADD'L COMMENTS	KL	FLB	03/22/13
ADD'L COMMENTS	KL	FLB	04/01/13
REV. PER TESTING	KL	FLB	07/17/13
ADD'L COMMENTS	KL	FLB	08/07/13
ADD'L COMMENTS	KL	FLB	10/03/13

12-SAT-15
SCALE: - 07
PAGE DESCRIPTION: